NEMA Standards Publication BU 1.2-2002

Application Information for Busway Rated 600 Volts or Less

Published by

National Electrical Manufacturers Association
1300 North 17th Street
Rosslyn, Virginia 22209

www.nema.org

© Copyright 2002 by the National Electrical Manufacturers Association. All rights including translation into other languages, reserved under the Universal Copyright Convention, the Berne Convention for the Protection of Literary and Artistic Works, and the International and Pan American Copyright Conventions.

Copyright National Electrical Manufacturers Association
Provided by IHS under license with NEMA
No reproduction or networking permitted without license from IHS
Not for Resale

NOTICE AND DISCLAIMER

The information in this publication was considered technically sound by the consensus of persons engaged in the development and approval of the document at the time it was developed. Consensus does not necessarily mean that there is unanimous agreement among every person participating in the development of this document.

The National Electrical Manufacturers Association (NEMA) standards and guideline publications, of which the document contained herein is one, are developed through a voluntary consensus standards development process. This process brings together volunteers and/or seeks out the views of persons who have an interest in the topic covered by this publication. While NEMA administers the process and establishes rules to promote fairness in the development of consensus, it does not write the document and it does not independently test, evaluate, or verify the accuracy or completeness of any information or the soundness of any judgments contained in its standards and guideline publications.

NEMA disclaims liability for any personal injury, property, or other damages of any nature whatsoever, whether special, indirect, consequential, or compensatory, directly or indirectly resulting from the publication, use of, application, or reliance on this document. NEMA disclaims and makes no guaranty or warranty, expressed or implied, as to the accuracy or completeness of any information published herein, and disclaims and makes no warranty that the information in this document will fulfill any of your particular purposes or needs. NEMA does not undertake to guarantee the performance of any individual manufacturer or seller's products or services by virtue of this standard or guide.

In publishing and making this document available, NEMA is not undertaking to render professional or other services for or on behalf of any person or entity, nor is NEMA undertaking to perform any duty owed by any person or entity to someone else. Anyone using this document should rely on his or her own independent judgment or, as appropriate, seek the advice of a competent professional in determining the exercise of reasonable care in any given circumstances. Information and other standards on the topic covered by this publication may be available from other sources, which the user may wish to consult for additional views or information not covered by this publication.

NEMA has no power, nor does it undertake to police or enforce compliance with the contents of this document. NEMA does not certify, test, or inspect products, designs, or installations for safety or health purposes. Any certification or other statement of compliance with any health or safety–related information in this document shall not be attributable to NEMA and is solely the responsibility of the certifier or maker of the statement.

--`,,`,,`-`-`,,`,,`,`,,`---

Copyright National Electrical Manufacturers Association
Provided by IHS under license with NEMA
No reproduction or networking permitted without license from IHS Not for Resale

CONTENTS

Page

Foreword ... ii
Section 1 SCOPE ... 1
Section 2 REFERENCED STANDARDS ... 2
Section 3 RESISTANCE, REACTANCE, AND IMPEDANCE
3.1 Method to Determine Resistance, Reactance, and Impedance ... 3
3.1.1 Readings Taken During the Temperature-Rise Test ... 3
3.1.2 Calculate the Average Phase-to-Neutral Impedance Z ... 3
3.1.3 Calculate for Each Individual Phase ... 4
Section 4 VOLTAGE DROP
4.1 Voltage Drop Ratings ... 6
4.2 Voltage Drop Test for Three-Phase Busways—General ... 6
4.3 Calculation of Three-Phase Voltage Drop and Voltage Drop Deviation ... 6
4.3.1 Average Phase-to-Phase Voltage Drop ... 6
4.3.2 Phase-to-Phase Voltage Drop (VD) for Each Phase ... 7
4.3.3 The VD_{avg} Calculated in Paragraph 4.3.2 ... 7
4.3.4 The Percent Voltage Drop Deviation Per 100 Feet ... 7
4.4 All Voltage Drops and Deviations Indicated in Section 4.3 ... 7
4.5 The Voltage Drop of the Busway ... 7
4.6 All Preceding Voltage Drop Formulas ... 8
Section 5 RESISTANCE WELDING APPLICATION
5.1 General ... 9
5.2 Current Carrying Requirements ... 9
5.2.1 Group of Welders ... 10
5.2.2 Single-Phase Distribution Systems ... 10
5.2.3 Three-Phase Distribution Systems ... 10
5.3 Voltage Drop Requirements ... 10
5.3.1 General ... 11
5.3.2 Determine Total During-weld kVA for Voltage Drop Calculations ... 11
5.3.3 Determine Total During-weld Current for Voltage Drop Calculations ... 11
5.3.4 Determine the Welder Multiplier for Voltage Drop Calculations ... 12
5.3.5 Determine the Voltage Drop ... 12
5.4 Example of Determining Proper Busway for Resistance Welder Application ... 12
5.4.1 Example of Current Carrying Requirement Calculations ... 12
5.4.2 Example of Voltage Drop Requirement Calculations ... 12
5.5 Summary ... 13

© Copyright 2002 by the National Electrical Manufacturers Association.

Copyright National Electrical Manufacturers Association
Provided by IHS under license with NEMA
No reproduction or networking permitted without license from IHS
Not for Resale

Foreword

This Standards Publication is intended to provide a basis of common understanding within the electrical community.

The purpose of this Standards Publication is to provide a guide of practical application information for busway rated 600 volts or less.

User needs have been considered throughout the development of this publication. Proposed or recommended revisions should be submitted to:

Vice President, Engineering Department
National Electrical Manufacturers Association
1300 North 17th Street, Suite 1847
Rosslyn, Virginia 22209

This Standards Publication was developed by the LVDE 04 Busway Product Group of the LVDE Section. Approval of the publication does not necessarily imply that all members voted for its approval or participated in its development. At the time it was approved, the Group/Section was composed of the following members:

GE Industrial Systems—Plainville, CT
Siemens Energy & Automation, Inc.—Alpharetta, GA
Square D Company—Palatine, IL
Eaton Corporation—Pittsburgh, PA

© Copyright 2002 by the National Electrical Manufacturers Association.

Copyright National Electrical Manufacturers Association
Provided by IHS under license with NEMA
No reproduction or networking permitted without license from IHS
Not for Resale

Section 1
SCOPE

This Standards Publication covers products for distribution of electric power at 600 volts or less, consisting of enclosed sectionalized prefabricated busbars rated at 100 amperes or more.

It does not pertain to metal-enclosed busways as described in the ANSI/IEEE C37.23 Standard.

© Copyright 2002 by the National Electrical Manufacturers Association.

Copyright National Electrical Manufacturers Association
Provided by IHS under license with NEMA
No reproduction or networking permitted without license from IHS
Not for Resale

Section 2
REFERENCED STANDARDS

Underwriters Laboratories
333 Pfingsten Rd.
Northbrook, IL 60062

UL 857-2001 *Busways*

© Copyright 2002 by the National Electrical Manufacturers Association.

Copyright National Electrical Manufacturers Association
Provided by IHS under license with NEMA
No reproduction or networking permitted without license from IHS
Not for Resale

Section 3
RESISTANCE, REACTANCE, AND IMPEDANCE

3.1 METHOD TO DETERMINE RESISTANCE, REACTANCE, AND IMPEDANCE

Measurements are to be taken during the UL 857-*Busways* required temperature-rise test after the temperature has stabilized. Using high accuracy metering, take readings of the total power input ($W_1 + W_2$), the power in each phase (W_A, W_B, and W_C), the phase-to-phase voltage at the input end (V_{AB}, V_{BC}, and V_{CA}), the voltage drop along each phase (V_A, V_B, and V_C), the current in each phase (I_A, I_B, and I_C), and the test length (L) from the phase-to-phase measuring point to short circuit connection point of the busbars. See Figure 3-1.

3.1.1 Readings Taken During the Temperature-Rise Test

The following shall be calculated from the readings taken during the temperature-rise test:

V_{avg} = The average phase-to-phase voltage in volts. Take the readings of the three phases on a

$$V_{avg} = \frac{V_{AB} + V_{BC} + V_{CA}}{3}$$

three-phase test and calculate V_{avg} in accordance with the formula:

I_{avg} = The average current in amperes. On a three-phase test, the currents in each of the three phases shall not vary more than 3 % from the average current. Calculate I_{avg} in accordance with the formula:

$$I_{avg} = \frac{I_A + I_B + I_C}{3}$$

3.1.2 Calculate the Average Phase-to-Neutral Impedance Z

Calculate the average phase-to-neutral impedance Z, the ac resistance R, and the inductive reactance X, in ohms per foot on a phase-to-neutral basis, as follows:

$$Z_{avg} = \frac{V_{avg}}{\sqrt{3}\, I_{avg}\, L}$$

$$R_{avg} = \frac{W}{3\, I^2_{avg}\, L}$$

$$X_{avg} = \sqrt{Z^2_{avg} - R^2_{avg}}$$

Where:

W = $W_1 + W_2$, the total three phase power in watts.

L = The length in feet from where the supply connects at the input end to the point where the busbars are shorted together.

© Copyright 2002 by the National Electrical Manufacturers Association.

Copyright National Electrical Manufacturers Association
Provided by IHS under license with NEMA
No reproduction or networking permitted without license from IHS
Not for Resale

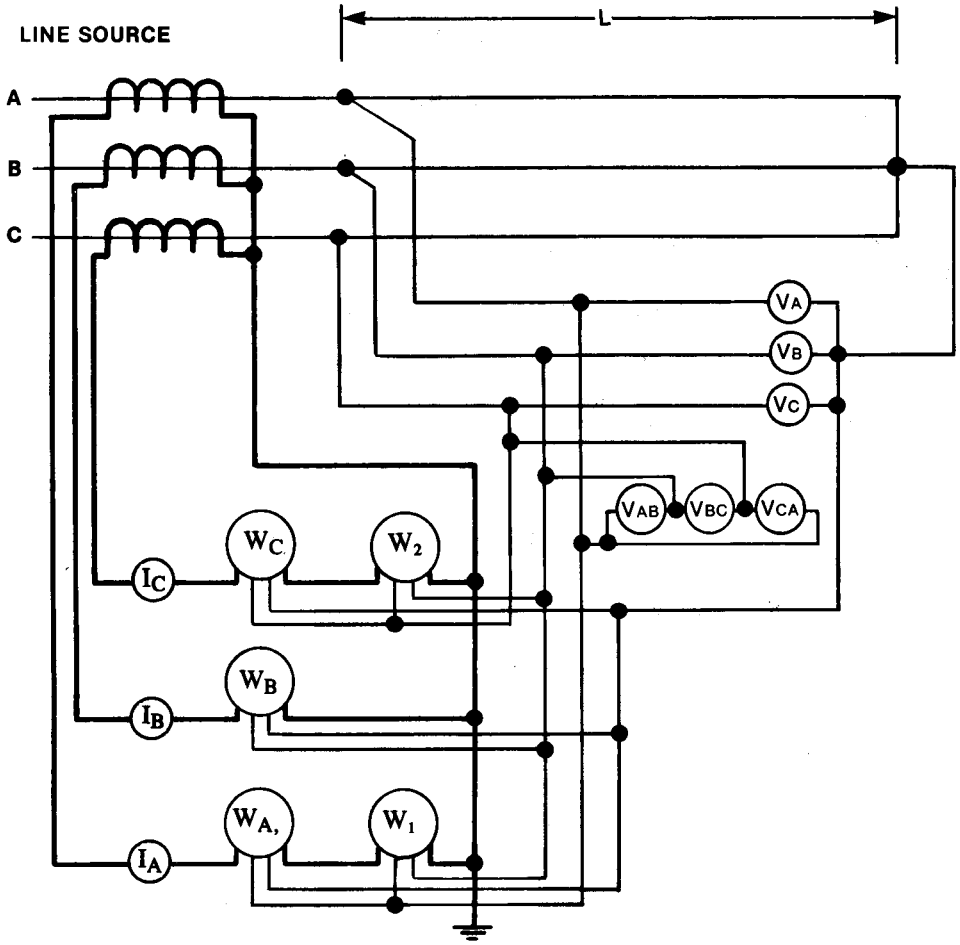

Figure 3-1
METER CONNECTIONS

The above diagram shows the meter connections for taking all necessary current, voltage, and power readings simultaneously. If preferred, single meters with suitable switches may be used. See 3.1.

3.1.3 Calculate for Each Individual Phase

Calculate for each individual phase the impedance Z, the alternating-current resistance R, and the inductive reactance X, in ohms per foot on a phase-to-neutral basis, as follows:

$$Z_A = \frac{V_A}{I_A L} \qquad Z_B = \frac{V_B}{I_B L} \qquad Z_C = \frac{V_C}{I_C L}$$

$$R_A = \frac{W_A}{I_A^2 L} \qquad R_B = \frac{W_B}{I_B^2 L} \qquad R_C = \frac{W_C}{I_C^2 L}$$

$$X_A = \sqrt{Z_A^2 - R_A^2} \qquad X_B = \sqrt{Z_B^2 - R_B^2} \qquad X_C = \sqrt{Z_C^2 - R_C^2}$$

$$R_{avg} = \frac{R_A + R_B + R_C}{3} \qquad X_{avg} = \frac{X_A + X_B + X_C}{3}$$

© Copyright 2002 by the National Electrical Manufacturers Association.

Copyright National Electrical Manufacturers Association
Provided by IHS under license with NEMA
No reproduction or networking permitted without license from IHS
Not for Resale

The averages of the three individual phases, R_{avg} and X_{avg} should agree with the averages calculated in accordance with paragraph 3.1.2.

IMPORTANT—To adjust resistance values to 25°C ambient temperature, increase the calculated resistance R by 0.32 % for each 1°C by which the test ambient is less than 25°C. Likewise, decrease the calculated resistance R by 0.32 % for each 1°C by which the test ambient exceeds 25°C. Within the accuracy of the parameter measurements, this method will provide a close approximation for either copper or aluminum.

© Copyright 2002 by the National Electrical Manufacturers Association.

Copyright National Electrical Manufacturers Association
Provided by IHS under license with NEMA
No reproduction or networking permitted without license from IHS
Not for Resale

Section 4
VOLTAGE DROP

4.1 VOLTAGE DROP RATINGS

Voltage drop ratings should be expressed as the average line-to-line voltage drop per 100 feet in one of the following ways:

a. Load concentrated at the end of the busway run.
b. Load evenly distributed along the busway run
   (usually considered to be one-half of the values in item a).

Voltage drops vary with the load power factor of the circuit and are at a maximum when the power factor of the load circuit is the same as the power factor of the busway. Voltage drop values can be expressed by curves showing the values for a range of load power factors or can be expressed as a single value at a specific load power factor. If a single value is expressed without reference to power factor, it shall be the maximum average value (see 4.5).

Voltage drop deviation shall be expressed as the voltage by which the individual line-to-line voltage drop differs from the average line-to-line voltage drop. It shall be expressed with the load either concentrated or distributed in accordance with item a or b above (see 4.4).

4.2 VOLTAGE DROP TEST FOR THREE-PHASE BUSWAYS—GENERAL

The voltage drop tests for three-phase busways shall be conducted under the same conditions as the temperature-rise tests described in UL 857-*Busways*, and the readings specified in 3.1 shall be taken after the temperature has stabilized. The ambient temperature shall be not less than 20°C.

4.3 CALCULATION OF THREE-PHASE VOLTAGE DROP AND VOLTAGE DROP DEVIATION

4.3.1 Average Phase-to-Phase Voltage Drop

The average phase-to-phase voltage drop (VD_{avg}) per 100 feet at rated load versus the load power factor (cos θ) shall be calculated as follows:

$$VD_{avg} = 100\sqrt{3}\ I(R_{avg}\ cos\ \theta + X_{avg}\ sin\ \theta)$$

Where:

I = Current rating in amperes
R_{avg} = Average phase-to-neutral resistance in ohms per foot
X_{avg} = Average phase-to-neutral inductive reactance in ohms per foot
θ = Load power factor angle

© Copyright 2002 by the National Electrical Manufacturers Association.

Copyright National Electrical Manufacturers Association
Provided by IHS under license with NEMA
No reproduction or networking permitted without license from IHS
Not for Resale

4.3.2 Phase-to-Phase Voltage Drop (VD) for Each Phase

The phase-to-phase voltage drop (VD) for each phase, the average voltage drop (VD_{avg}) and the voltage drop deviation (VD_{dev}) for each phase shall be calculated (per 100 feet at rated load versus power factor) as follows:

$$VD_{AB} = 100\left(\frac{\sqrt{3}}{2}\right)I\left[(R_A + R_B)\cos\theta + (X_A + X_B)\sin\theta\right]$$

$$VD_{BC} = 100\left(\frac{\sqrt{3}}{2}\right)I\left[(R_B + R_C)\cos\theta + (X_B + X_C)\sin\theta\right]$$

$$VD_{CA} = 100\left(\frac{\sqrt{3}}{2}\right)I\left[(R_C + R_A)\cos\theta + (X_C + X_A)\sin\theta\right]$$

$$VD_{avg} = \frac{VD_{AB} + VD_{BC} + VD_{CA}}{3}$$

$$VD_{dev\text{-}(AB)} = \left|VD_{AB} - VD_{avg}\right|$$

$$VD_{dev\text{-}(BC)} = \left|VD_{BC} - VD_{avg}\right|$$

$$VD_{dev\text{-}(CA)} = \left|VD_{CA} - VD_{avg}\right|$$

4.3.3 The VD_{avg} Calculated in Paragraph 4.3.2

The VD_{avg} calculated in paragraph 4.3.2 should agree with the average phase-to-phase voltage drop calculated in accordance with paragraph 4.3.1.

4.3.4 The Percent Voltage Drop Deviation Per 100 Feet

The percent voltage drop deviation per 100 feet shall be calculated for phases AB, BC, and CA as follows:

$$Percent\ VD_{dev} = \frac{VD_{dev}}{V_{line} - VD_{avg}} \times 100$$

4.4 All Voltage Drops and Deviations Indicated in Section 4.3

All voltage drops and deviations indicated in section 4.3 are for a concentrated load. For busway with uniformly distributed loads these values would be approximately 50% of those calculated.

4.5 The Voltage Drop of the Busway

IMPORTANT—The voltage drop of the busway varies according to the power factor of the external load. The maximum average drop in volts per 100 feet at rated load (VD_{max}) occurs when the power factor of the external load is equal to the power factor of the busway, in which case for three phase:

© Copyright 2002 by the National Electrical Manufacturers Association.

Copyright National Electrical Manufacturers Association
Provided by IHS under license with NEMA
No reproduction or networking permitted without license from IHS
Not for Resale

$$\cos\theta = \frac{R_{avg}}{\sqrt{R_{avg}^2 + X_{avg}^2}}$$

$$\sin\theta = \frac{X_{avg}}{\sqrt{R_{avg}^2 + X_{avg}^2}}$$

$$VD_{max} = 100\sqrt{3}\ I\ \sqrt{R_{avg}^2 + X_{avg}^2} \quad or\ 100\sqrt{3}\ I\ Z_{avg}$$

4.6 All Preceding Voltage Drop Formulas

All preceding voltage drop formulas give very close approximations as long as the voltage drop of the busway run remains small in comparison to the system voltage.

© Copyright 2002 by the National Electrical Manufacturers Association.

Copyright National Electrical Manufacturers Association
Provided by IHS under license with NEMA
No reproduction or networking permitted without license from IHS
Not for Resale

Section 5
RESISTANCE WELDING APPLICATION

5.1 GENERAL

The busway distribution system for a resistance welder installation should meet two requirements:

a) First, it should provide sufficient current-carrying capacity to avoid overheating the busway.
b) Second, it should not allow the permissible voltage drop to be exceeded.

5.2 CURRENT CARRYING REQUIREMENTS

The operation of resistance welders are defined as either constant operation or varying operation. Constant operation means that the actual primary current during weld and the duty cycle are known and do not vary. In varying operation, the duty cycle and type and thickness of material being welded will not be constant; thus reasonable assumptions should be made for these varying quantities and then used for the following determinations.

To determine the busway current carrying capacity required, it is necessary to convert the intermittent welder loads to an equivalent continuous load or effective kVA.

If the during-weld kVA demand and the duty cycle for a welder are known, the effective kVA can be obtained by multiplying the during-weld kVA demand by the square root of the duty cycle divided by 10. The duty cycle is the percentage of the time during which the welder is loaded. For simplicity sake, multipliers for various duty cycles are listed in Table 5.1. Based upon the welder's duty cycle, the proper multiplier is chosen. This multiplier times the during-weld kVA demand determines the effective kVA.

Table 5-1
DUTY CYCLE MULTIPLIERS

Percent Duty Cycle	Multiplier
50	0.71
40	0.63
30	0.55
25	0.50
20	0.45
15	0.39
10	0.32
7.5	0.27
5 or less	0.22

© Copyright 2002 by the National Electrical Manufacturers Association.

Copyright National Electrical Manufacturers Association
Provided by IHS under license with NEMA
No reproduction or networking permitted without license from IHS
Not for Resale

If the during-weld kVA demand is unknown, it can be assumed to be 70 percent of the welder secondary short-circuit kVA.

If both the during-weld kVA and the duty cycle are unknown, the effective kVA can be assumed to be 70 % of the nameplate kVA rating for seam and automatic welders and 50 percent of the nameplate kVA for manually operated welders other than seam. Nameplate kVA rating is defined as the maximum load that can be imposed on the welding machine transformer at a 50 % duty cycle.

5.2.1 Group of Welders

It has been found by actual measurement that the total effective kVA of a group of welders is equal to the effective kVA of the largest welder plus 60 % of the sum of the effective kVA of the remaining welders.

Once the total effective kVA has been determined, the busway current carrying requirement can be easily calculated as follows:

5.2.2 Single-Phase Distribution Systems

$$\text{(Busway Current carrying requirement)} = \frac{\text{(Total Effective kVA) x 1000}}{\text{(Line to Line Voltage)}}$$

5.2.3 Three-Phase Distribution Systems

$$\text{(Busway Current carrying requirement)} = \frac{\text{(Total Effective kVA) x 1000}}{\text{(Line to Line Voltage) x } \sqrt{3}}$$

5.3 VOLTAGE DROP REQUIREMENTS

To assure consistently good welds, the overall voltage drop in a distribution system should be limited to 10 percent. In some instances this may be excessive; therefore, specific permissible voltage drop information should be obtained whenever possible. The overall 10% value includes voltage drop in the primary distribution system, the distribution transformers, and the secondary distribution system.

The voltage drop in the primary distribution system can be obtained from the power company provided the maximum kVA demand and the power factor of the largest welder is furnished.

The voltage drop in the distribution transformer can be calculated from the formula:

$$\text{(Voltage drop Percent)} = \frac{\text{(During-weld kVA) x (Transformer Impedance Percent)}}{\text{(Transformer kVA Rating)}}$$

Voltage drop curves for busway can be used as a basis for determining the voltage drop in the secondary distribution system. It is general practice to permit 2 % voltage drop in the primary distribution system, 5 % in the distribution transformer, and the remaining 3 % in the secondary distribution system.

© Copyright 2002 by the National Electrical Manufacturers Association.

Copyright National Electrical Manufacturers Association
Provided by IHS under license with NEMA
No reproduction or networking permitted without license from IHS
Not for Resale

5.3.1 General

Voltage drop for welder circuits can be determined in the same way as for conventional circuits except that it must be based on a welder multiplier factor which equates to the total during-weld current divided by the busway current rating.

5.3.2 Determine Total During-weld kVA for Voltage Drop Calculations

Large welders are sometimes interlocked to prevent excessive voltage drop caused by the possibility of simultaneous firing. In such cases, it is necessary to consider only the largest of the interlocked welders in calculating voltage drop.

a) Total the nameplate kVA ratings of all large production or butt welders, excluding interlocked welders.
b) Total the nameplate kVA ratings of all other non-interlocked welders.
c) Record the nameplate kVA rating of the largest of any interlocked welders.

The during-weld kVA can be assumed to be approximately 4 times the nameplate kVA rating for large projection or butt welders and 2 1/2 times the nameplate kVA rating for other types.

1) Multiply the total from “a” above by 4.
2) Multiply the total from “b” above by 2-1/2.
3) Multiply the number from “c” above (if any) by either 4 or 2-1/2 as applicable.
4) Sum the total of 1, 2 and 3.

$$\frac{\begin{array}{l}\text{Total kVA of all non-interlocked large production or butt x 4}\\ \text{Total kVA of all other non-interlocked x 2.5}\\ \text{Largest Interlocked kVA x (4 or 2.5 as applicable)}\end{array}}{\text{Total During-weld kVA}}$$

This is the total during-weld kVA for Voltage Drop Calculations

5.3.3 Determine Total During-weld Current for Voltage Drop Calculations

Multiply the total during-weld kVA (see 5.3.2) by 1000.
Divide by the line to line system voltage times the square root of 3.

$$\text{(Total During-weld Current)} = \frac{\text{(Total during-weld kVA) x 1000}}{\text{(Line to Line Voltage) x } \sqrt{3}}$$

This is the total during-weld current for Voltage Drop Calculations.

© Copyright 2002 by the National Electrical Manufacturers Association.

Copyright National Electrical Manufacturers Association
Provided by IHS under license with NEMA
No reproduction or networking permitted without license from IHS
Not for Resale

5.3.4 Determine the Welder Multiplier for Voltage Drop Calculations

Divide the total during-weld current (see 5.3.3) by the proposed busway current rating.

$$\text{(Welder Multiplier Factor)} = \frac{\text{(Total during-weld current)}}{\text{(Busway Current Rating)}}$$

This is the welder multiplier factor for Voltage Drop Calculations.

5.3.5 Determine the Voltage Drop

Determine the voltage drop of the proposed busway from the manufacturer's data for the appropriate power factor and distance the same as for conventional circuits. Multiply this voltage drop by the welder multiplier factor (see 5.3.4).

5.4 EXAMPLE OF DETERMINING PROPER BUSWAY FOR RESISTANCE WELDER APPLICATION

It is desired to determine the minimum size busway that will meet current carrying and voltage drop requirements for an industrial plant with 440-volt, 3-phase, 3-wire service. The busway is to supply the following group of welders which are balanced on the phases and evenly distributed along a 200 foot feeder run: (1) 300 kVA butt, (1) 175 kVA butt, (1) 150 kVA seam, (4) 100 kVA spot, (5) 50 kVA spot, (10) 5 kVA spot. The welders are manually operated and the 300 and 175 kVA welders are interlocked to prevent their firing simultaneously. Power factor of the welders is given as 40 % and permissible voltage drop in the feeder duct is 3 percent. Specific information regarding during-weld kVA and duty cycles is not available.

5.4.1 Example of Current Carrying Requirement Calculations

a. Effective kVA of largest welder 300 x 50% = 150 kVA.
b. Effective kVA of seam welder 150 x 70% = 105 kVA.
c. Effective kVA of remaining welders 700 x 50% = 350 kVA excluding the interlocked 175 kVA welder.
d. Total effective kVA 150 + (105 + 350) x 60% = 423 kVA.
e. Equivalent continuous current:

$$\frac{423\ kVA}{440} \times \frac{1000}{\sqrt{3}} = 555\ amp$$

Thus, 600-amp low-impedance busway will meet the current carrying requirement.

5.4.2 Example of Voltage Drop Requirement Calculations

a. Total nameplate kVA of butt welders-300 kVA excluding the interlocked 175 kVA welder.
b. Total nameplate kVA of remaining welders-850 kVA.
c. During-weld kVA of butt welders 4 x 300 = 1200 kVA.
d. During-weld kVA of remaining welders: 2 1/2 x 850 = 2125 kVA.
e. During-weld kVA is 1200 + 2125 = 3325 kVA.
f. Three-phase during-weld current:

© Copyright 2002 by the National Electrical Manufacturers Association.

Copyright National Electrical Manufacturers Association
Provided by IHS under license with NEMA
No reproduction or networking permitted without license from IHS
Not for Resale

$$\frac{3325\ kVA \times 1000}{440 \times \sqrt{3}} = 4370\ amp$$

For example, using the voltage drop calculations shown in section 4. At 40 % power factor the voltage drop per 100 feet of 600 ampere low impedance busway carrying rated load would be about 2.7 volts. Since the load is distributed, use half this value. Voltage drop for feeder system is:

$$\left(\frac{4370A}{600A}\right) \times \left(\frac{\left(\frac{1}{2} \times 2.7volts\right)}{100\ feet}\right) \times 200feet = 19.6\ volts$$

$$Percent\ voltage\ drop\ is\ \frac{19.6}{440}\ or\ 4.5\%.$$

This exceeds the permissible voltage drop of 3 %, and it will be necessary to go to a larger size busway. An 800 ampere low impedance busway would have a voltage drop of 3.3 %. Because of the conservative nature of the assumptions made, this would be the logical choice.

5.5 SUMMARY

Since it is difficult to obtain specific information concerning the operation of welders (particularly in new installations) and to determine accurately the possibilities for simultaneous firing of the welders, exact solutions to problems of distribution systems for resistance welders are not feasible.

In the example, it was stated that the load was balanced and distributed. In actuality, it is extremely difficult to balance the load, and distribution may be far from uniform. In the case of unevenly distributed loads, it may be necessary to individually compute the voltage drop for each welder and use the sum of the results. By obtaining as much information as possible concerning a proposed installation, by tabulating this information in logical sequence, and by using good judgment in the making of reasonable and conservative assumptions where missing data are concerned, a busway distribution system can be chosen in a size necessary to serve the load adequately and most efficiently.

© Copyright 2002 by the National Electrical Manufacturers Association.

Copyright National Electrical Manufacturers Association
Provided by IHS under license with NEMA
No reproduction or networking permitted without license from IHS
Not for Resale