| NOTICE OF |
| ADOPTION |

ADOPTION NOTICE 1
19 April 1993 for
NEMA BU 1-1988
1988

NEMA BU 1-1988 was adopted on 19 April 1993 and is approved for use by the Department of Defense (DoD). National Electrical Manufacturers Association has furnished the clearance required by existing regulations. Copies of the document are stocked at the Standardization Documents Order Desk, Bldg. 4D, 700 Robbins Avenue, Philadelphia, PA 19111-5094, for issue to DoD activities only. All other requestors must obtain copies from:

National Electrical Manufacturers Association
2101 L Street, N.W.
Washington, DC 20037

Title of Document: Busways

Date of Specific Issue Adopted: 1988 (No specific date)

Releasing Non-Government Standards Body: National Electrical Manufacturers Association

Military Coordinating Activity:
Navy - YD

(Project 5975-1118)

FSC 5975

DISTRIBUTION STATEMENT A. Approved for public release; distribution is unlimited.

Copyright National Electrical Manufacturers Association
Provided by IHS under license with NEMA
No reproduction or networking permitted without license from IHS
Not for Resale

BU 1-88 6470247 0006432 5

nema

NEMA STANDARDS PUBLICATION NO. BU 1

Busways

NEMA

NATIONAL ELECTRICAL MANUFACTURERS ASSOCIATION ■ 2101 L STREET, N.W., WASHINGTON, D.C. 20037

Copyright National Electrical Manufacturers Association
Provided by IHS under license with NEMA
No reproduction or networking permitted without license from IHS
Not for Resale

BU 1-88 6470247 0006433 7

BU 1

BUSWAYS

Published by

National Electrical Manufacturers Association
2101 L Street, N.W.
Washington, DC 20037

©1989 by National Electrical Manufacturers Association

Copyright National Electrical Manufacturers Association
Provided by IHS under license with NEMA
No reproduction or networking permitted without license from IHS

Not for Resale

TABLE OF CONTENTS

		Page
	FOREWORD	i
	SCOPE	ii
Section 1	REFERENCED STANDARDS AND DEFINITIONS	1
Section 2	GENERAL AND RATING SYSTEMS	5
Section 3	TESTING STANDARDS	7
Section 4	MANUFACTURING STANDARDS	10
Section 5	APPLICATION INFORMATION	12

Copyright National Electrical Manufacturers Association
Provided by IHS under license with NEMA
No reproduction or networking permitted without license from IHS
Not for Resale

Foreword

This Standards Publication is intended to provide a basis of common understanding within the electrical community.

To assure a meaningful publication, copies were sent during the draft stage to a number of typical individuals and orgainizations in the public and private sector having an interest in or responsibility for the purchase, testing, application, use, or inspection of this product category. Their resultant comments and suggestions provided a vital user and general interest input prior to final NEMA approval and resulted in a number of substantive changes being made in this publication.

As future major revisions to this publication are proposed, it is intended to offer the same or similar individuals or organizations a further opportunity to participate in the development of this publication.

The purpose of this Standards Publication is to provide a basis for understanding between the manufacturers and users of feeder busway, plug-in busway, and busway accessories.

Proposed or recommended revisions should be submitted to:

Manager, Engineering Department
National Electrical Manufacturers Association
2101 L Street, N.W.
Washington, DC 20037

Publication No. BU 1-1988 revises and supersedes BU 1-1983, NEMA Standards Publication for *Busways*. Prior to publication, the NEMA Standards, Suggested Standards for Future Design, and Authorized Engineering Information that appear in this publication unchanged since their appearance in BU 1-1983 were reaffirmed. Those that have been revised are follwed by their appropriate classification and date.

Copyright National Electrical Manufacturers Association
Provided by IHS under license with NEMA
No reproduction or networking permitted without license from IHS
Not for Resale

Scope

This Standards Publication covers products for distribution of electric power at 600 volts or less, consisting of enclosed sectionalized prefabricated busbars rated at 100 amperes or more, and associated structures and fittings, classified as follows:

1. Feeder busways (indoor or outdoor),
2. Plug-in busways (indoor only), and
3. Accessories required to complete the busway system.

Copyright National Electrical Manufacturers Association
Provided by IHS under license with NEMA
No reproduction or networking permitted without license from IHS
Not for Resale

Section 1
Referenced Standards and Definitions

1.1 REFERENCED STANDARDS

In this publication, reference is made to the standards listed below:

American National Standards Institute
1430 Broadway
New York, NY 10018

ANSI C37.16-1988 — *Preferred Ratings, Related Requirements, and Application Recommendations for Low-Voltage Power Circuit Breakers and AC Power Circuit Protectors*

American Society for Testing and Materials
1916 Race Street
Philadelphia, PA 19103

ASTM D1535-80 — *Method of Specifying Color by the Munsell System*

Institute of Electrical and Electronic Engineers
Publication Sales Department
445 Hoes Lane
Piscataway, NJ 08854

ANSI/IEEE Std. 141-1986* — *Recommended Practices for Electric Power Distribution for Industrial Plants*

National Electrical Manufacturers Association
2101 L Street, N.W.
Washington, DC 20037

NEMA AB 1-1986 — *Molded Case Circuit Breakers*
NEMA ICS 1-1988 — *General Standards for Industrial Control and Systems*
NEMA KS 1-1983 — *Enclosed Switches*
NEMA PB 1-1984 — *Panelboards*

National Fire Protection Association
Publications Sales Department
Batterymarch Park
Quincy, MA 02269

NFPA 70-1987 — *National Electrical Code*

Underwriters Laboratories
333 Pfingsten Rd.
Northbrook, IL 60062

ANSI/UL 857-1982* — *Standard for Busway and Associated Fittings*

*Also available from the American National Standards Institute

Copyright National Electrical Manufacturers Association
Provided by IHS under license with NEMA
No reproduction or networking permitted without license from IHS
Not for Resale

1.2 DEFINITIONS

An accessory is a noncurrent-carrying component of a busway system used to mount or adapt the busway to the building structure.

NEMA Standard 11-3-1977.

An adapter is a fitting which permits the joining together of lengths and fittings of different shapes or designs.

NEMA Standard 11-3-1977.

Ambient temperature is the temperature of the surrounding air that comes in contact with the outside of the busway enclosure, device, or fitting.

NEMA Standard 9-15-1983.

Asymmetrical current is the alternating current having a wave form which is offset with respect to the zero axis. The offset occurs at the initiation of a short circuit or other change in current. The offset usually decays quickly until steady-state conditions are reached and the current becomes symmetrical. Asymmetrical current is composed of the alternating symmetrical component and a direct component. It is expressed in rms asymmetrical amperes at a specific time (normally ½ cycle) after initiation of a short circuit or other change in current. Peak current refers to the maximum instantaneous amperes within this first ½ cycle.

NEMA Standard 11-3-1977.

Available short circuit current is the maximum current which a circuit is capable of delivering at the system terminals ahead of the apparatus being applied. Available short circuit current may be expressed in either rms symmetrical amperes or rms asymmetrical amperes.

NEMA Standard 9-15-1983.

A bolt-on device is a power take-off means which can be bolted to the busways at a joint between lengths and fittings, at the end of a run, or at any predetermined location, and which makes electrical connection to the busbars.

NEMA Standard 11-3-1977.

Busbars are conductors which carry current through busway lengths and fittings, and which have one of the following arrangements:

1. *Single Bar*—A single-bar arrangement refers to a busway having one conductor per phase or pole.

2. *Multibar*—A multibar arrangement refers to a busway having two or more conductors for one or more of its phases or poles.

NEMA Standard 11-3-1977.

A busway is a prefabricated electric distribution system consisting of busbars in a protective enclosure, including straight lengths, fittings, devices, and accessories. Busways are of the following types:

1. *Feeder Busway—A feeder busway* is a busway having no plug-in openings and intended primarily for conducting electric power from the source of supply to centers of distribution, but can have provisions for bolt-on devices.

2. *Plug-in Busway*—A plug-in busway is a busway having plug-in openings on one or both sides at spaced intervals, offering means for electrical connection of plug-in or bolt-on devices to the busbars.

NEMA Standard 11-3-1977.

A center cable tap box is a fitting or device which provides for the attachment of cables at a location other than the end of a busway run.

NEMA Standard 11-3-1977.

A circuit breaker is a device designed to open and close a circuit by nonautomatic means, and to open the circuit automatically on a predetermined overcurrent, without injury to itself when properly applied within its rating.

NEMA Standard 11-3-1977.

Continuous current rating is the designated maximum direct current or alternating current in rms amperes at rated frequency which a busway can carry continuously without exceeding its temperature rise limits when subjected to specified heating tests.

NEMA Standard 7-19-1972.

A cross is a fitting suitable for connection in four directions.

NEMA Standard 11-3-1977.

A cubicle is an enclosure attached to a length or fitting for the purpose of enclosing electrical components.

NEMA Standard 11-3-1977.

Copyright National Electrical Manufacturers Association
Provided by IHS under license with NEMA
No reproduction or networking permitted without license from IHS
Not for Resale

A device is an enclosed component used on, rather than in, a run of a busway system. The device may carry current from the busway system to supply a load circuit or be a nonload-supplying unit, such as a ground detector.

NEMA Standard 11-3-1977.

An elbow is an angular fitting.

NEMA Standard 11-3-1977.

An end cable tap box is a fitting that provides for the attachment of cables and conduits at the end of the busway run.

NEMA Standard 11-3-1977.

An end closure is a fitting which terminates and closes the end of the busway run.

NEMA Standard 11-3-1977.

An expansion fitting is a fitting which accommodates expansion and contraction of the busway or building.

NEMA Standard 11-3-1977.

A fitting (busway) is a component in a run of a busway system, other than a straight length. It may be either current–carrying such as an elbow, tee or cross or noncurrent–carrying such as an end closure.

NEMA Standard 9-15-1983.

A flanged end (or switchboard stub) is a fitting which provides means for mechanically and electrically connecting a busway run to other apparatus.

NEMA Standard 11-3-1977.

A floor flange is an accessory on the outside of the busway enclosure that provides means for the installer to cover the floor opening penetrated by the busway.

NEMA Standard 11-3-1977.

An equipment grounding conductor is a conductor which is used to connect noncurrent-carrying metal parts of the busway.

NEMA Standard 11-3-1977.

Indoor means suitable for installation within a building which protects the busway from exposure to the weather.

NEMA Standard 11-3-1977.

A neutral conductor is a conductor which is connected to the midpoint of a three-wire single-phase system, center point of a wye-connected three-phase system or the midpoint of one side of a delta-connected three-phase system.

NEMA Standard 11-3-1977.

Offset means a fitting providing two or more angles.

NEMA Standard 11-3-1977.

Outdoor means so constructed that exposure to the weather will not interfere with successful operation.

NOTE—Outdoor busway is not suitable for outdoor use until completely and properly installed as recommended by the manufacturer.

NEMA Standard 9-15-1983.

A plug-in circuit breaker is a plug-in device containing an externally operable circuit breaker.

NEMA Standard 11-3-1977.

A plug-in device (or busplug) is a power take-off means which can be plugged into a plug-in busway and which makes electrical connection to the busbars.

NEMA Standard 11-3-1977.

A plug-in fusible switch is a plug-in device containing an externally operable fusible switch.

NEMA Standard 11-3-1977.

1. *Handle-Operated*—A handle-operated switch is a switch that is externally operated without opening or closing the cover.
2. *Cover-Operated*—A cover-operated switch is a switch that is operated by opening and closing the cover.

NEMA Standard 11-3-1977.

A plug-in ground detector is a plug-in device which indicates a ground on any of the normally ungrounded busway conductors.

NEMA Standard 11-3-1977.

A plug-in potentializer (or neutralizer) is a plug-in device having means for limiting the potential difference between the busway enclosure and the busbars.

NEMA Standard 11-3-1977.

Copyright National Electrical Manufacturers Association
Provided by IHS under license with NEMA
No reproduction or networking permitted without license from IHS
Not for Resale

Rating means the designated limit(s) of the rated operating characteristic(s) of a busway length, fitting or device.
NOTE—Such operating characteristics as current, voltage, frequency, etc., may be given in the rating.
NEMA Standard 11-3-1977.

A reducer is a fitting designed for connection between lengths and fittings of different ampere ratings.
NEMA Standard 11-3-1977.

A roof flange is an accessory on the outside of the busway enclosure that provides means for the installer to weatherproof the roof opening penetrated by the busway.
NEMA Standard 11-3-1977.

Straight length means a straight section of a busway system.
NEMA Standard 11-3-1977.

A switch is a device for opening and closing, or for changing the connection of a circuit.
NEMA Standard 11-3-1977.

Symmetrical current is alternating current having no offset or transient component and, therefore, having a wave form essentially symmetrical about the zero axis. Symmetrical current is expressed in terms of rms amperes.
NEMA Standard 9-17-1972.

A tee is a fitting suitable for connection in three directions.
NEMA Standard 11-3-1977.

Totally enclosed means so constructed as to prevent the free exchange of air between the inside and outside of the housing, but not sufficiently enclosed to be termed, *air tight.*
NEMA Standard 11-3-1977.

A transformer tap is a fitting having busbars extended through its housing or end barrier for connections by open cable to terminals of the transformer(s).
NEMA Standard 11-3-1977.

A transformer throat connection is a fitting which provides enclosed busbar connections to transformer terminals.
NEMA Standard 11-3-1977.

A transposition fitting is a fitting wherein the busbar positions are interchanged to equalize the impedance of the different phases or to change the phase relationship.
NEMA Standard 11-3-1977.

A transverse barrier is a dividing barrier or other means of restricting the free flow of either air or moisture through the inside of a busway.
NEMA Standard 11-3-1977.

Vault termination means a fitting having open busbars extending from one end which provides for connections to vault equipment.
NEMA Standard 11-3-1977.

Ventilated means so constructed as to provide for the circulation of external air through the enclosure to remove heat.
NEMA Standard 11-3-1977.

A voltage drop means the arithmetical difference between the voltage at the load and supply ends.
NEMA Standard 7-21-1954.

A wall flange is an accessory on the outside of the busway enclosure that provides means for the installer to cover the wall opening penetrated by the busway.
NEMA Standard 11-3-1977.

Copyright National Electrical Manufacturers Association
Provided by IHS under license with NEMA
No reproduction or networking permitted without license from IHS
Not for Resale

Section 2
GENERAL AND RATING STANDARDS

2.1 SAFETY REQUIREMENTS

Busways shall comply with the Underwriters Laboratories Inc., Publication No. UL 857, or latest revision thereof.

NEMA Standard 11-3-1977.

2.2 LENGTH

A busway length shall normally be 10 feet, or less, between joint centers.

NEMA Standard 11-3-1977.

2.3 SERVICE CONDITIONS

2.3.1 Usual Service Conditions

Busways conforming to this Standards Publication shall be suitable for operation.

1. When and where the ambient temperature is within the limits of the busway.
2. Where the altitude does not exceed 6600 feet (2000 meters).

NEMA Standard 11-3-1977.

See Table 2-1 for usual ambient temperature limits.

Authorized Engineering Information 11-3-1977.

2.3.2 Unusual Service Conditions

For applications where the ambient temperature is higher than 40°C, the busway current rating should be derated in accordance with the manufacturer's recommendations, if furnished, or the following:

Ambient Temperature	Multiplier
40°C	1.00
45°C	0.95
50°C	0.90
55°C	0.85
60°C	0.80
65°C	0.74
70°C	0.67

For applications where the ambient temperature is lower than the ambient temperature limits shown in Table 2-1 or at altitudes greater than 6600 feet (2000 meters), consult the manufacturer.

There are other service conditions that may require further consideration. Where such conditions exist, it is recommended that *they be brought to the manufacturer's attention.* (See 5.11 and 5.15).

Authorized Engineering Information 9-15-1983.

2.4 RATINGS OF BUSWAY

2.4.1 Continuous Current Ratings

1. *Plug-in Busway.* 100,225,400, 600, 800, 1000, 1200, 1350, 1600, 2000, 2500, 3000, and 4000 amperes.
2. *Feeder Busway.* 600, 800, 1000, 1200, 1350, 1600, 2000, 2500, 3000, 4000, and 5000 amperes.

2.4.2 Voltage Ratings

Voltage ratings shall be 600 volts or less.

Table 2-1
Ambient Temperature Limits

	Ambient Temperature Limits	NEMA Standards Publication No.
Busway lengths and fittings	–30°C through +40°C	
Molded case circuit breakers	0°C through +40°C	NEMA AB 1
Enclosed switches	–30°C through +40°C	NEMA KS 1
Low-voltage cartridge fuses	See applicable UL Standards	
Electromagnetic and manual motor controls at 6000 feet and less	0°C through +40°C maximum	NEMA ICS 1, ICS 2, and ICS 3

Copyright National Electrical Manufacturers Association
Provided by IHS under license with NEMA
No reproduction or networking permitted without license from IHS
Not for Resale

2.4.3 Short-Circuit Current Rating*

The following short-circuit current ratings shall apply phase-to-neutral, phase-to-phase, phase-to-enclosure, and phase to ground conductor (when applicable).

*(See 5.5)

Continuous Current Rating of Busway (Amperes)	Short-Circuit Current Ratings (Symmetrical Amperes)	
	Plug-In Duct	Feeder Duct
100	10,000	...
225	14,000	...
400	22,000	...
600	22,000	42,000
800	22,000	42,000
1000	42,000	75,000
1200	42,000	75,000
1350	42,000	75,000
1600	65,000	100,000
2000	65,000	100,000
2500	65,000	150,000
3000	85,000	150,000
4000	85,000	200,000
5,000	...	200,000

NEMA Standard 1-15-1986.

2.4.4 Voltage Drop Ratings

Voltage drop ratings shall be expressed as the average line-to-line voltage drop per 100 feet in one of the following ways:

1. Load concentrated at the end of the busway run.
2. Load evenly distributed along the busway run (usually considered to be one-half of the values in item 1).

Voltage drops vary with the load power factor of the circuit and are at a maximum when the power factor of the load circuit is the same as the power factor of the busway. Voltage drop values can be expressed by curves showing the values for a range of load power factors or can be expressed as a single value at a specific load power factor. If a single value is expressed without reference to power factor, it shall be the maximum average value (See 3.2 and 5.3).

Voltage drop deviation shall be expressed as the voltage by which the individual line-to-line voltage drop differs from the average line-to-line voltage drop. If shall be expressed with the load either concentrated or distributed in accordance with item 1 or 2 above (See 3.5).

NEMA Standard 11-3-1977.

2.5 RATINGS OF CIRCUIT BREAKER PLUG-IN OR BOLT-ON DEVICES

2.5.1 Current and Voltage Ratings

The current and voltage ratings shall be the same as those shown for circuit breakers in NEMA Standards Publication No. AB 1 or American National Standard C37.16.

2.5.2 Frequency Rating

The frequency rating of ac devices shall be 60 Hz.

2.5.3 Short-Circuit Current Rating

The short-circuited rating shall be no greater than the interrupting current rating or series connected rating of the circuit breaker used or the maximum short-circuit current rating of the device itself.

For molded case circuit-breaker ratings, see NEMA Standards Publication No. AB 1. For low-voltage power circuit-breaker ratings, see American National Standard C37.16.

NEMA Standard 9-15-1983.

2.6 RATINGS OF FUSIBLE SWITCH PLUG-IN OR BOLT-ON DEVICES

2.6.1 Current Ratings

The current ratings of devices incorporating cover-operated switches shall be 30, 60, 100, and 200 amperes. The current ratings of devices incorporating handle-operated switches shall be 30, 60, 100, 200, 400, 600, 800, 1200, and 1600 amperes.

2.6.2 Voltage Ratings

The voltage ratings of devices shall be the same as those given for switches in NEMA Standards Publication No. KS 1.

2.6.3 Frequency Rating

The frequency rating of ac devices shall be 60 Hz.

2.6.4 Horsepower Rating

Horsepower ratings for devices incorporating cover-operated switches shall correspond to those given for general-duty switches, and horsepower ratings for devices incorporating handle-operated switches shall correspond to those given for heavy-duty switches in NEMA Standards Publication No. KS 1.

2.6.5 Short-circuit Current Ratings

The short-circuit current ratings shall be 25, 50, 100, or 200 kiloamperes symmetrical for devices used with Class J, L, or R fuses having equal or greater interrupting ratings.

Tests to verify the short-circuit current ratings of enclosed plug-in and bolt-on devices shall be made in accordance with UL 857.

NEMA Standard 9-15-1983.

Copyright National Electrical Manufacturers Association
Provided by IHS under license with NEMA
No reproduction or networking permitted without license from IHS

Not for Resale

Section 3
TESTING STANDARDS

3.1 GENERAL

Busways and associated fittings shall be tested in accordance with all applicable test required by Underwriters Laboratories, Inc., Publication No. 857.

In addition, the following tests shall be performed:

1. Voltage-drop tests for three-phase busways (see 3.2 through 3.5).
2. Any other tests required for special applications as agreed to by the manufacturer and user.

NEMA Standard 9-15-1983.

3.2 VOLTAGE DROP TEST FOR THREE-PHASE BUSWAYS – GENERAL

The voltage drop tests for three-phase busways shall be conducted under the same conditions as the temperature-rise tests described in Underwriters Laboratories Inc., Publication No. 857, and the readings specified in 3.3 shall be taken after the maximum temperature rise has been reached. The ambient temperature shall be not less than 20°C.

NEMA Standard 9-15-1983.

3.3 METHOD OF TEST TO DETERMINE RESISTANCE, REACTANCE, AND IMPEDANCE

After the temperature has stabilized, accurate readings of the total power input ($W_1 + W_2$), the power in each phase (W_A, W_B, and W_C), the phase-to-phase voltage at the input end (V_{AB}, V_{BC}, and V_{CA}), the voltage drop along each phase (V_A, V_B, and V_C), the current in each phase (I_A, I_B, and I_C), and the test length (L) from the phase-to-phase measuring point to centerline of shorted busbars shall be taken. See Figure 3-1.

NEMA Standard 1-15-1986.

3.4 DETERMINATION OF PARAMETERS

3.4.1 The following shall be calculated from the test data obtained during the temperature-rise test:

V_{avg} = The average phase-to-phase voltage in volts. Take the readings of the three phases on a three-phase test and calculate V_{avg} in accordance with the formula:

$$V_{avg} = \frac{V_{AB}+V_{BC}+V_{CA}}{3}$$

I_{avg} = The average current in amperes. On a three-phase test, the currents in each of the three phases shall not vary more than 3 percent from the average current. Calculate I_{avg} in accordance with the formula:

$$I_{avg} = \frac{I_A+I_B+I_C}{3}$$

W = The total three-phase power in watts.

$W = W_1 + W_2$

L = The length in feet from the voltmeter leads connected at the input end to the center of where the busbars are shorted.

NEMA Standard 1-15-1986.

3.4.2 Calculate the average phase-to-neutral impedance Z, the ac resistance R, and the inductive reactance X, in ohms per foot on a phase-to-neutral basis, as follows:

$$Z_{avg} = \frac{V_{avg}}{\sqrt{3}\, I_{avg} L}$$

$$R_{avg} = \frac{W}{3 I^2_{avg} L}$$

$$X_{avg} = \sqrt{Z^2_{avg} - R^2_{avg}}$$

NEMA Standard 1-15-1986.

Copyright National Electrical Manufacturers Association
Provided by IHS under license with NEMA
No reproduction or networking permitted without license from IHS
Not for Resale

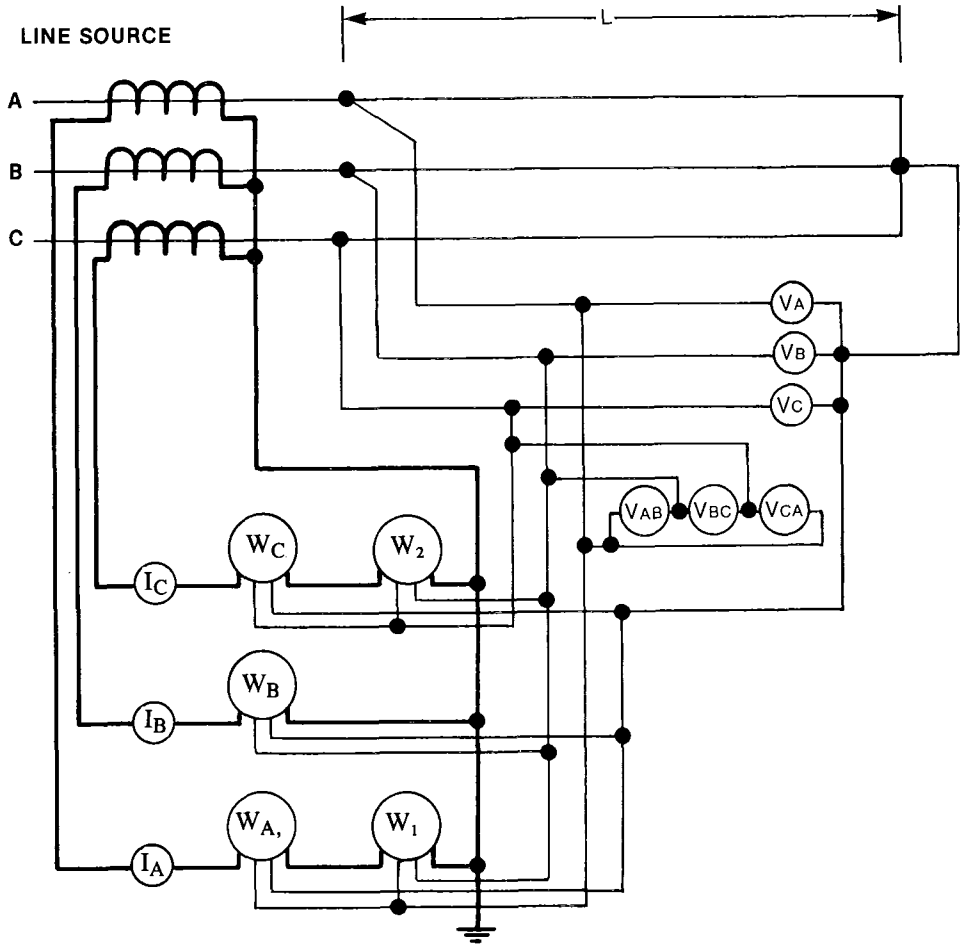

The above diagram shows the meter connections for taking all necessary current, voltage, and power readings simultaneously. If preferred, single meters with suitable switches may be used. See 3.3.

Figure 3-1
Meter Connections

Copyright National Electrical Manufacturers Association
Provided by IHS under license with NEMA
No reproduction or networking permitted without license from IHS
Not for Resale

3.4.3 Calculate for each individual phase the impedance Z_{avg}, the alternating-current resistance R_{avg}, and the inductive reactance X_{avg}, in ohms per foot on a phase-to-neutral basis, as follows:

$$Z_A = \frac{V_A}{I_A L} \qquad Z_B = \frac{V_B}{I_B L}$$

$$Z_C = \frac{V_C}{I_C L} \qquad R_A = \frac{W_A}{I_A^2 L}$$

$$R_B = \frac{W_B}{I_B^2 L} \qquad R_C = \frac{W_C}{I_C^2 L}$$

$$R_{avg} = \frac{R_A + R_B + R_C}{3} \qquad X_A = \sqrt{Z_A^2 - R_A^2}$$

$$X_B = \sqrt{Z_B^2 - R_B^2} \qquad X_C = \sqrt{Z_C^2 - R_C^2}$$

$$X_{avg} = \frac{X_A + X_B + X_C}{3}$$

R_{avg} and X_{avg} for the three individual phases should agree with the average three-phase phase-to-neutral values calculated in accordance with par. 3.4.2. (This sentence has been approved as Authorized Engineering Information.)

IMPORTANT: To adjust resistance values to 25 °C ambient temperature, increase the calculated resistance R by 0.32 percent for each 1 ° by which the test ambient is less than 25 °C. Likewise, decrease the calculated resistance R by 0.32 percent for each 1 °C by which the test ambient exceeds 25 °C. Within the accuracy of the parameter measurements, this method will provide a close approximation for either copper or aluminum.

NEMA Standard 1-15-1986.

3.5 CALCULATION OF THREE-PHASE VOLTAGE DROP AND VOLTAGE DROP DEVIATION

3.5.1 The average phase-to-phase voltage drop (VD_{avg}) per 100 feet at rated load versus the load power factor (COS θ) shall be calculated as follows:

$$VD_{avg} = 100\sqrt{3}\, I(R_{avg} \cos\theta + X_{avg} \sin\theta)$$

I = Current rating in amperes.
R_{avg} = Average three-phase phase-to-neutral resistance in ohms per foot
X_{avg} = Average three-phase phase-to-neutral inductive reactance in ohms per foot.
θ = Load power factor angle

3.5.2

The phase-to-phase voltage drop (VD) for each phase, the average voltage drop (VD_{avg}) and the voltage drop deviation (VD_{dev}) for each phase per 100 feet at rated load versus power factor shall be calculated as follows:

$$VD_{AB} = 100\left(\frac{\sqrt{3}}{2}\right) I\left[(R_A + R_B)\cos\theta + (X_A + X_B)\sin\theta\right]$$

$$VD_{BC} = 100\left(\frac{\sqrt{3}}{2}\right) I\left[(R_B + R_C)\cos\theta + (X_B + X_C)\sin\theta\right]$$

$$VD_{CA} = 100\left(\frac{\sqrt{3}}{2}\right) I\left[(R_C + R_A)\cos\theta + (X_C + X_A)\sin\theta\right]$$

$$VD_{avg} = \frac{VD_{AB} + VD_{BC} + VD_{CA}}{3}$$

$$VD_{dev\text{-}(AB)} = \left|VD_{AB} - VD_{avg}\right|$$

$$VD_{dev\text{-}(BC)} = \left|VD_{BC} - VD_{avg}\right|$$

$$VD_{dev\text{-}(CA)} = \left|VD_{CA} - VD_{avg}\right|$$

NEMA Standard 1-15-1986.

3.5.3 The VD_{avg} calculated in paragraph 3.5.2 should agree with average phase-to-phase voltage drop calculated in accordance with paragraph 3.5.1. (This paragraph has been approved as Authorized Engineering Information.)

3.5.4 The percent voltage drop deviation per 100 feet shall be calculated for phases AB, BC, and CA as follows:

$$\text{Percent } VD_{dev} = \frac{VD_{dev}}{V_{line} - VD_{avg}} \times 100$$

NEMA Standard 1-15-1986.

3.5.5 All voltage drops and deviations indicated in paragraph 3.5 are for a concentrated load. For busway with uniformly distributed loads these values would be approximately 50% of those calculated.

Authorized Engineering Information 1-15-1986.

IMPORTANT: The voltage drop of the busway varies according to the power factor of the external load. The maximum average drop in volts per 100 feet at rated load (VD_{max}) occurs when the power factor of the external load is equal to the power factor of the busway, in which case for three phase:

$$\cos\theta = \frac{R_{avg}}{\sqrt{R_{avg}^2 + X_{avg}^2}}$$

$$\text{sine } \theta = \frac{X_{avg}}{\sqrt{R_{avg}^2 + X_{avg}^2}}$$

$$VD_{max} = 100\sqrt{3}\, I\sqrt{R_{avg}^2 + X_{avg}^2} \text{ or } 100\sqrt{3}\, IZ_{avg}$$

The foregoing voltage drop formulas give very close approximations as long as the voltage drop of the busway run remains small in comparison to the system voltage.

NEMA Standard 1-15-1986.

Copyright National Electrical Manufacturers Association
Provided by IHS under license with NEMA
No reproduction or networking permitted without license from IHS
Not for Resale

Section 4
MANUFACTURING STANDARDS

4.1 GENERAL

Busways shall meet the manufacturing standards given in the Underwriters Laboratories Inc., Publication No. 857.

NEMA Standard 9-15-1983.

4.2 MARKINGS

4.2.1 General

Each length of busway and each busway fitting or device shall be marked with the following:

1. Manufacturer's name or trademark;
2. Manufacturer's catalog number or equivalent; and,
3. Maximum permissible electrical rating.

All markings shall be on nonremovable parts and shall be readily visible after the busway is installed.

4.2.2 Warning Labels and Associated Markings

To make users aware of immediate or potential hazards in their application, installation, use, or maintenance, busway and associated equipment shall be conspicuously marked at the following locations (with the following text or effective equivalent) and reflecting the following format.

This requirement is not intended to rule out the use of other labels or markings that are required to comply with other nationally recognized standards or applicable laws or regulations (such as radiation warnings) or that shall be deemed necessary by the manufacturer.

Vivid Red, Munsell Notation 7.5R 4.0/14 shall be the predominant visual color for either the signal word **DANGER** and the danger symbol, or for the background.

Black, white, or metallic shall be permitted to be used for contrast; these colors shall be permitted to be used for either the lettering or the background. The symbol for danger shall have the proportions shown in Fig. 4-1.

For interior **WARNING INSTRUCTIONS** any color shall be permitted to be used and the symbol for danger is not required. As an alternate, the **WARNING INSTRUCTIONS** text shall be permitted to be located on a label on the outside of a door or front cover.

1. *Plug-in Busway.* When plug-in covers are provided, use label shown below on outside of enclosure, adjacent to or as part of label described in 4.2.1.

DANGER: Hazard of electrical shock or burn. Close covers at all unused openings.

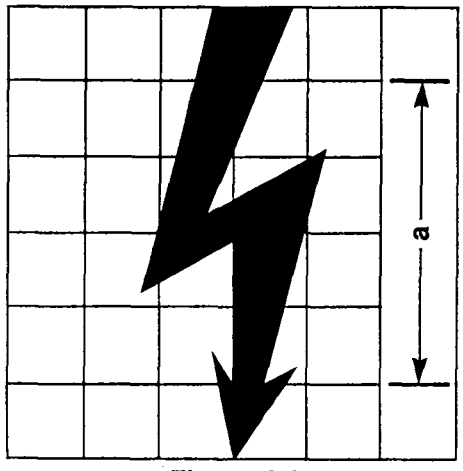

Figure 4-1
Danger Symbol
Real Dimensions: Height = 1.48a
Width = 0.58a

2. through 7. *Fixed Feed-in or Bolt-on Devices and/or Bus Plugs.* See Table 4-1.

4.2.3 Other Markings

The following markings shall appear on the rating nameplate or on individual nameplates in close proximity to the rating nameplate.

4.2.3.1 Rating Based on Mounting

When the current rating is dependent upon the mounting position, the busway shall be plainly marked to so indicate.

4.2.3.2 Vertical Riser Mounting

Each length of busway that is suitable for use in a vertical riser position shall be plainly marked to indicate such suitability.

4.2.3.3 Increased Support Spacing

Each length of busway that is suitable for supporting at intervals of more than 5 feet (but not more than 10 feet horizontally or 16 feet vertically) shall be plainly marked to indicate such suitability.

4.2.3.4 Outdoor Busway

Each length of busway and each busway fitting that is suitable for outdoor use shall be plainly marked to indicate such suitability. If drain holes are provided, each busway length and busway fitting shall be plainly marked to indicate the proper mounting position, so that the drain holes will function as intended.

NEMA Standard 11-3-1977.

Copyright National Electrical Manufacturers Association
Provided by IHS under license with NEMA
No reproduction or networking permitted without license from IHS

Not for Resale

Table 4-1

Type of Device		Use label with DANGER symbol and this text (or effective equivalent), conspicuously located on front of fixed or removable door or cover	Use WARNING instruction text on a label inside (or outside) a door or front cover (see 4.2.2)
2. *Fixed Feed-in or Bolt-on Device*—which bolt or clamp in place on feeder or plug-in busway and do not contain a disconnect means.	**DANGER:**	Hazard of electrical shock or burn. TURN OFF POWER to busway before installing, removing, or working on this equipment.	
3A. *Circuit Breaker Bus Plug*—type having fingers which enter *one* plug-in opening in busway.	**DANGER:**	Hazard of electrical shock or burn. TURN OFF this disconnect before plugging in or removing this bus plug. See instructions on inside (or outside) of door (or cover).	**WARNING INSTRUCTIONS:** TURN OFF POWER to bus-way, or remove this bus plug from busway, before working on line side of CIRCUIT BREAKER. TURN OFF CIRCUIT BREAKER before working on load side. (Add whichever is applicable: (a) Replace all parts and close cover before turning power *ON*. (b) Replace all parts and cover before turning power *ON*. (c) Close cover before turning power *ON*. (d) Replace cover before turning power *ON*.)
3B. *Circuit Breaker Bus Plug*—type having fingers which enter *more than one* plug-in opening in the busway, or which is bolted or clamped in place.	**DANGER:**	Hazard of electrical shock or burn. TURN OFF POWER to busway before installing, removing, or working on this equipment. See instructions on inside (or outside) of door (or cover).	**WARNING INSTRUCTIONS:** TURN OFF POWER to busway before working on line side of CIRCUIT BREAKER. TURN OFF CIRCUIT BREAKER before working on load side... balance of instructions same as for applicable parts (a, b, c and d) of label for 3A.
4A. *Fused Switch Bus Plug*—type having fingers which enter *one* plug-in opening in busway.	**DANGER:**	Same as for Type 3A bus plug.	**WARNING INSTRUCTIONS:** TURN OFF POWER to busway, or remove this bus plug from busway, before working on line side of SWITCH. TURN OFF SWITCH before installing or replacing fuses, or working on load side... balance of instructions same as for applicable parts (a, b, c and d) of label for 3A.
4B. *Fused Switch Bus Plug*—type having fingers which enter *more than one* plug-in opening in the busway, or which is bolted or clamped in place.	**DANGER:**	Same as for Type 3B bus plug.	**WARNING INSTRUCTIONS:** TURN OFF POWER to busway before working on line side of SWITCH. TURN OFF SWITCH before installing or replacing fuses or working on load side... balance of instructions same as for applicable parts (a, b, c and d) of label for 3A.
5. *Fused Switch, Cover Operated*—type having *OFF* position only when the door or cover is open and having fingers which enter *one* plug-in opening in the busway.	**DANGER:**	Hazard of electrical shock or burn. Remove all fuses before plugging in or removing this bus plug. See instructions on inside (or outside) of door (or cover).	**WARNING INSTRUCTIONS:** TURN OFF POWER to busway, or remove this bus plug from busway, before working on line side of SWITCH. Remove all fuses before plugging in or removing this bus plug. (Add if applicable: Replace all parts before turning power *ON*.)
6. *Non-switching Bus Plug*—with or without fuses.	**DANGER:**	Same as for Type 3B bus plug.	**WARNING INSTRUCTIONS:** TURN OFF POWER to busway before working inside this bus plug and before installing or removing fuses. (Add if applicable: Replace all parts before turning power *ON*.)
7. *Other Plugs*—circuit breaker or fused switch bus plug which incorporates auxiliary equipment such as transformer, capacitors, motor controllers, etc.	**DANGER:**	Use warning label with danger symbol, as required, for the corresponding bus plug types listed above.	Use warning instructions, as required, for the corresponding bus plug types listed above.

If an auxiliary base is used to install any of the above bus plugs or devices, a Type 2 label shall be located conspicuously on the front of the auxiliary mounting base.

Copyright National Electrical Manufacturers Association
Provided by IHS under license with NEMA
No reproduction or networking permitted without license from IHS
Not for Resale

Section 5
APPLICATION INFORMATION

Manufacturers provide application guidelines for their products. This information and the latest *National Electrical Code* should be rigorously followed. In addition, the following information should be helpful.

5.1 AMPERE RATINGS

For proper application, the ampere rating of a busway should be not less than the calculated continuous load or, in the case of intermittent loads, the calculated equivalent continuous load. (See *National Electrical Code* Section 220-10b.)

NOTE—In calculating continuous load, advantage may be taken of appropriate demand factors.

Authorized Engineering Information 11-3-1977.

5.2 FREQUENCY

Busway is usually rated at 60 hertz maximum, unless some frequency rated equipment is in the circuit such as transformers, electronic devices, etc. For application at other frequencies, consult the manufacturer.

Authorized Engineering Information 11-3-1977.

5.3 VOLTAGE DROP (GENERAL)

Good practice indicates that the voltage drop in feeder circuits up to the final distribution point where the load is divided into individual branch circuits should not exceed 3 percent for power, heating or lighting loads or combination thereof. Total voltage drop for feeders and individual branch circuits up to the final utilization point should not exceed 5 percent overall.

NOTE—See part 3 for voltage drop calculations using the busway parameters provided by the manufacturer. See 5.4 for voltage drop on resistance welding applications.

Authorized Engineering Information 11-3-1977.

5.4 RESISTANCE WELDING APPLICATION

The busway distribution system for a resistance welder installation should meet two requirements. First, it should provide sufficient current-carrying capacity to avoid overheating the busway. Second, it should not allow the permissible voltage drop to be exceeded.

The operation of resistance welders may be considered as either constant or varying. Constant operation means that the actual primary current during weld and the duty cycle are known and do not vary. In varying operation, the duty cycle and type and thickness of material being welded will not be constant; thus reasonable assumptions should be made for these varying quantities.

To determine the current carrying capacity required, it is necessary to convert the intermittent welder loads to an equivalent continuous load or effective kVA. If the during-weld kVA demand and the duty cycle for a welder are known, the effective kVA can be obtained by multiplying the during-weld kVA demand by the square root of the duty cycle divided by 100. The duty cycle is the percentage of the time during which the welder is loaded.

The multipliers for various duty cycles are listed below:

Percent Duty Cycle	Multiplier
50	0.71
40	0.63
30	0.55
25	0.50
20	0.45
15	0.39
10	0.32
7.5	0.27
5 or less	0.22

If the during-weld kVA demand is unknown, it can be assumed to be 70 percent of the welder secondary short circuit kVA. If both the during-weld kVA and the duty cycle are unknown, the effective kVA can be assumed to be 70 percent of the nameplate kVA rating for seam and automatic welders and 50 percent of the nameplate kVA for manually operated welders other than seam. Nameplate kVA rating is defined as the maximum load that can be imposed on the welding machine transformer at a 50 percent duty cycle.

It has been found by actual measurement that the total effective kVA of a group of welders is equal to the effective kVA of the largest welder plus 60 percent of the sum of the effective kVA of the remaining welders.

Copyright National Electrical Manufacturers Association
Provided by IHS under license with NEMA
No reproduction or networking permitted without license from IHS
Not for Resale

Once the effective kVA has been determined, the current carrying requirement can be easily calculated as follows:

5.4.1 Single-Phase Distribution Systems

Current carrying requirement =

$$\frac{\text{Total Effective kVA} \times 1000}{\text{Line to Line Voltage}}$$

5.4.2 Three-Phase Distribution Systems

Current carrying requirement =

$$\frac{\text{Total Effective kVA} \times 1000}{\text{Line to Line Voltage} \times \sqrt{3}}$$

To assure consistently good welds the voltage drop in a distribution system should be limited to 10 percent. In some instances this may be excessive; therefore, specific permissible voltage drop information should be obtained whenever possible. The 10 percent value includes voltage drop in the primary distribution system, the distribution transformers, and the secondary distribution system.

The voltage drop in the primary distribution system can be obtained from the power company provided the maximum kVA demand and the power factor of the largest welder is furnished.

The voltage drop in the distribution transformer can be found from the formula:

Voltage drop (%) =

$$\frac{\text{During-weld kVA} \times \text{Transformer Impedance (\%)}}{\text{Transformer kVA Rating}}$$

Voltage drop curves for busway can be used as a basis for determining the voltage drop in the secondary distribution system. It is general practice to permit 2 percent voltage drop in the primary distribution system, 5 percent in the distribution transformer, and the remaining 3 percent in the secondary distribution system.

Voltage drop can be determined in the same way as for conventional circuits based on the current as calculated from the during-weld kVA. If the during-weld kVA is unknown, it can be assumed to be approximately 4 times the nameplate kVA rating for large projection or butt welders and 2½ times the nameplate kVA rating for other types. Large welders are sometimes interlocked to prevent excessive voltage drop caused by the possibility of simultaneous firing. In such cases, it is necessary to consider only the largest of the interlocked welders in calculating voltage drop.

5.4.3 Example

It is desired to determine the minimum size busway that will meet current carrying and voltage drop requirements for an industrial plant with 440-volt, 3-phase, 3-wire service. The busway is to supply the following group of welders which are balanced on the phases and evenly distributed along a 200 foot feeder run: 1 to 300 kVA butt, 1 to 175 kVA butt, 1 to 150 kVA seam, 4 to 100 kVA spot, 5 to 50 kVA spot, 10 to 5 kVA spot. The welders are manually operated and the 300 and 175 kVA welders are interlocked to prevent their firing simultaneously. Power factor of the welders is given as 40 percent and permissible voltage drop in the feeder duct is 3 percent. Specific information regarding during-weld kVA and duty cycles is not available.

5.4.4 Current Carrying Requirement Calculations

Effective kVA of largest welder $300 \times 50\% = 150$ kVA.

Effective kVA of seam welder $150 \times 70\% = 105$ kVA.

Effective kVA of remaining welders $700 \times 50\% = 350$ kVA excluding the interlocked 175 kVA welder.

Total effective kVA $150 + (105 + 350) \times 60\% = 423$ kVA.

Equivalent continuous current:

$$\frac{423 \text{ kVA}}{440} \times \frac{1000}{\sqrt{3}} = 555 \text{ amp}$$

Thus, 600-amp low-impedance busway will meet the current carrying requirement.

5.4.5 Voltage Drop Requirement Calculations

Total nameplate kVA of butt welders—300 kVA excluding the interlocked 175 kVA welder.

Total nameplate kVA of remaining welders—850 kVA.

During-weld kVA of butt welders $4 \times 300 = 1200$ kVA.

During-weld kVA of remaining welders: $2\frac{1}{2} \times 850 = 2125$ kVA.

During-weld kVA is $1200 + 2125 = 3325$ kVA.

Three-phase during-weld current:

$$\frac{3325 \text{ kVA} \times 1000}{440 \times \sqrt{3}} = 4370 \text{ amp}$$

Copyright National Electrical Manufacturers Association
Provided by IHS under license with NEMA
No reproduction or networking permitted without license from IHS
Not for Resale

For example, use the voltage drop formula shown in 3.5. At 40 percent power factor the voltage drop per 100 feet of 600 ampere low impedance busway carrying rated load would be about 2.7 volts. Since the load is distributed, use half this value, 1.35. Voltage drop for feeder system is:

$$1.35 \times \frac{4370}{600} \times \frac{200 \text{ feet}}{100 \text{ feet}} = 19.6 \text{ volts}$$

Percent voltage drop is $\frac{19.6}{440}$ or 4.5%.

This exceeds the permissible voltage drop of 3 percent, and it will be necessary to go to a larger size busway. An 800 ampere low impedance busway would have a voltage drop of 3.3 percent. Because of the conservative nature of the assumptions made, this would be the logical choice.

Since it is difficult to obtain specific information concerning the operation of welders (particularly in new installations) and to determine accurately the possibilities for simultaneous firing of the welders, exact solutions to problems of distribution systems for resistance welders are not feasible.

In the example, it was stated that the load was balanced and distributed. In actuality, it is extremely difficult to balance the load, and distribution may be far from uniform. In the case of unevenly distributed loads, it may be necessary to individually compute the voltage drop for each welder and use the sum of the results. By obtaining as much information as possible concerning a proposed installation, by tabulating this information in logical sequence, and by using good judgment in the making of reasonable and conservative assumptions where missing data are concerned, a busway distribution system can be chosen in a size necessary to serve the load adequately and most efficiently.

Authorized Engineering Information 9-15-1983.

5.5 SHORT-CIRCUIT CURRENT

Available short-circuit current calculations should be made and compared to the short circuit rating of the busway, fittings and devices. In no case should the available symmetrical short-circuit current (including motor contribution, see 5.8) exceed the symmetrical short circuit current ratings the manufacturer has assigned to the lowest rated device in the circuit.

For proper application on direct current circuits, the short-circuit current rating of the busway should be at least as great as the maximum current available.

Short circuit ratings of busways not marked for use with current-limiting devices are established on a test basis of three cycles, since there is no increase in mechanical force after the maximum offset current of the first cycle has decayed.

Busway may be used on circuits having available short circuit currents greater than the 3 cycle rating of the busway rating when properly coordinated with current-limiting devices. Consult the manufacturer for recommendations.

Authorized Engineering Information 11-3-1983.

Short circuit current ratings marked on each device shall apply to phase-to-neutral, phase-to-phase, phase-to-enclosure, and phase-to-ground conductor (when applicable) short circuit currents.

NEMA Standard 1-15-1986.

5.6 GROUNDING

The enclosure of a UL listed busway marked with a short-circuit current rating is recognized as an equipment grounding conductor. However, the enclosure must be properly bonded to other equipment grounding conductors in the system, and all of these conductors must be properly connected to a suitable system ground. Consult the *National Electrical Code* for proper system grounding procedures.

NEMA Standard 11-17-1988.

5.7 INSPECTION AFTER SHORT CIRCUIT

When any installation of busway has been subjected to a short circuit current at or near its rating, good practice requires careful inspection and removal of the cause of the difficulty before the busway is re-energized.

Authorized Engineering Information 7-21-1954.

5.8 DETERMINATION OF SYMMETRICAL CURRENT

The symmetrical current consists of the sum of system and motor contributions, calculated in the following manner:

5.8.1 System Contribution

System contribution is determined for all sources and all impedances up to the busway.

5.8.2 Motor Contribution

Induction and synchronous motors connected to the system ahead of a short-circuit act as generators and, at one-half cycle after the short-circuit occurs, contribute current which may be calculated from the subtransient reactance of the motors. Where the reactance of the motors is not known, current values are assumed to be 3.6 times motor full-load current for induction motors and 4.8 times motor full-load current for synchronous motors.

When the motor load of the installation is not known, assumptions may be based on system voltages.

Copyright National Electrical Manufacturers Association
Provided by IHS under license with NEMA
No reproduction or networking permitted without license from IHS

Not for Resale

For a system voltage of 208Y/120 volts or 480Y/277 volts in industrial plants, it is usual that the connected load is 50 percent lighting and 50 percent motor load. This corresponds to an equivalent symmetrical current contribution of twice the full connected load.

For a system voltage of 240 to 600 volts in industrial plants, it is usual to assume that the load is 100 percent motor load and, in the absence of exact information, that the motors are 25 percent synchronous and 75 percent induction. This corresponds to an equivalent symmetrical current contribution of 4 times the full connected load.

NOTE: IEEE Publication No. Std. 141 contains additional information for the calculation of short-circuit currents.

Authorized Engineering Information 1-15-1986.

5.9 ARCING PROTECTION

When Ground Fault Protection (GFP) is not used, experience has indicated that damage from arcing faults can be reduced if the device used for overload and short circuit protection is set to operate instantaneously (that is, without intentional time delay) at 115 percent of the highest phase current which is likely to occur as a result of any anticipated peak motor starting or welding currents.

GFP is recommended to minimize damage in the event that a ground fault is of a low enough magnitude so that the overcurrent protective device would not trip or would take an extended time to trip.

Ground fault sensors are generally of two types: (1) the sensor monitors the grounding conductor only, and (2) the sensor monitors the net current flow through all of the circuit conductors. It is recommended that ground fault sensors be applied to all busway feeders rated 1000 amperes or more.

A ground bus is sometimes used to reduce the impedance of the ground return path. When used, it is usually of a physical size equal to 25 or 50 percent of the cross section of the phase busbars. To be most effective, the ground bus should be installed in the busway enclosure, or the enclosure itself, if designed for that purpose could serve as the ground bus. A ground bus is not recommended as a satisfactory substitute for ground fault protection, but rather as additional protection to reduce damage to the electrical system in case of a ground fault.

Authorized Engineering Information 9-15-1983.

5.10 TRANSVERSE BARRIERS

Where a busway extends through a floor or inside wall, an internal transverse barrier which is designed to restrict the free flow of air may be provided.

Where a busway extends through a roof or outside wall, a suitable weather barrier should be installed in accordance with the manufacturer's instructions.

Authorized Engineering Information 11-3-1977

5.11 BUSWAY MOUNTING

5.11.1 Horizontal Mounting

A busway which is mounted horizontally should be supported at a maximum of 5-foot intervals and in no case at more than 10-foot intervals if it is marked as being suitable for such intervals.

The supports and/or the busway should be braced to minimize swaying.

Bus plugs or cubicles which have considerable weight and which are mounted with a horizontal run of busway should be separately supported by the building structure to prevent twisting or deformation of the busway.

5.11.2 Vertical Mounting

A busway which is to be mounted vertically should be marked to indicate that it is suitable for that service. When the distance between floor supports is more than the busway is marked as suitable for, the manufacturer's recommendation regarding intermediate supports should be followed, but in no case should support intervals exceed 16 feet. Heavy cubicles, panelboards and bus plugs should be separately supported by the building structure when so recommended by the manufacturer.

5.11.3 Mounting Across Building Expansion Joints

A busway section which spans a building expansion joint should be provided with suitable expansion means for both the busbars and the busway housing unless the length of busway beyond the expansion joint is sufficiently short so that the supporting means can be designed to withstand the expected building motion.

Authorized Engineering Information 11-3-1977.

5.12 UNUSUAL SERVICE CONDITIONS

Unless specifically designed for such, do not locate busway so that it is exposed to dust, vapors, abnormal vibration, shock or other such unusual operating conditions. A busway should not be installed in wet locations or outdoors unless specifically identified as an outdoor busway.

Authorized Engineering Information 11-3-1977.

5.13 ACCESSIBLE LOCATIONS

Busways may be installed only where located in the open and are visible, except that they may be installed behind panels, if means of access are provided, and, if all the conditions of Article 364 of the *National Electrical Code* are met.

Authorized Engineering Information 11-3-1977.

Copyright National Electrical Manufacturers Association
Provided by IHS under license with NEMA
No reproduction or networking permitted without license from IHS
Not for Resale

5.14 NEUTRAL BUSBARS

Neutral busbars having half the current-carrying capacity of the phase bars are available from some manufacturers. Before specifying half-size neutral busbars, the anticipated load should be check carefully to make certain it will not exceed the neutral current rating. Full neutral is required between transformer line and neutral taps. Full neutral is required for individual line and neutral connections to single-phase transformers of a three-phase bank. (See also note 10 under notes to Tables 310-16 through 310-31 of the *National Electrical Code*).

Authorized Engineering Information 11-3-1977.

5.15 EXPANSION JOINTS

Expansion joints may be required: (1) where a busway crosses a building expansion joint (see 5.10.3), and (2) on unusually long, straight runs or vertical risers.

Consult the busway manufacturer for recommendations on specific layouts.

Authorized Engineering Information 11-3-1977.

5.16 ALUMINUM BUSWAY

Applications involving the use of aluminum busway under unusual environmental conditions such as exposure to corrosive or explosive fumes, areas of high chemical or salt concentration, and such, should be brought to the manufacturer's attention.

The manufacturer should also be consulted for the use of busway plugs on aluminum busway for unusually severe cycling loads.

Authorized Engineering Information 9-15-1983.

Copyright National Electrical Manufacturers Association
Provided by IHS under license with NEMA
No reproduction or networking permitted without license from IHS

Not for Resale

NEMA STANDARDIZATION

The purpose of NEMA Standards, their classification and status, are set forth in certain clauses of the NEMA *Standardization Policies and Procedures* manual and are referenced below.

Purpose of Standards

National Electrical Manufacturers Association Standards are adopted in the public interest and are designed to eliminate misunderstandings between the manufacturer and the purchaser and to assist the purchaser in selecting and obtaining the proper product for its particular need. Existence of a National Electrical Manufacturers Association Standard does not in any respect preclude any member or nonmember from manufacturing or selling products not conforming to the standard. *(Standardization Policies and Procedures, p. 1)*

Definition of a Standard

A standard of the National Electrical Manufacturers Association defines a product, process, or procedure with reference to one or more of the following: nomenclature, composition, construction, dimensions, tolerances, safety, operating characteristics, performance, rating, testing, and the service for which they are designed.
(Standardization Policies and Procedures, p. 2)

Dimensions

Where dimensions are given for interchangeability purposes, alternate dimensions satisfying the other provisions of the standards publication may be capable of otherwise equivalent performance.
(Standardization Policies and Procedures, p. 9)

Classes of Standards

National Electrical Manufacturers Association Standards are of two classes:

1. NEMA Standard, which relates to a product commercially standardized and subject to repetitive manufacture, which standard has been approved by at least 90 percent of the members of the Subdivision eligible to vote thereon;
2. Suggested Standard for Future Design, which may not have been regularly applied to a commercial product, but which suggests a sound engineering approach to future development, which standard has been approved by at least two-thirds of the members of the Subdivision eligible to vote thereon.

(Standardization Policies and Procedures, pp. 8 & 17)

Authorized Engineering Information

Authorized Engineering Information consists of explanatory data and other engineering information of an informative character not falling within the classification of NEMA Standard or Suggested Standard for Future Design, which standard has been approved by at least two-thirds of the members of the Subdivision eligible to vote on the standard.
(Standardization Policies and Procedures, pp. 8 & 17)

Official Standards Proposal

An Official Standards Proposal is an official draft of a proposed standard which is formally recommended to an outside organization(s) for consideration, comment, and/or approval, and which has been approved by at least 90 percent of the members of the Subdivision eligible to vote thereon.
(Standardization Policies and Procedures, pp. 8 & 17)

Identification of Status

Standards in NEMA Standards Publications are identified in the foreword or following each standard as "NEMA Standard" or "Suggested Standard for Future Design." These indicate the status of the standard. These words are followed by a date which indicates when the standard was adopted in its present form by the Association.

The material identified as "Authorized Engineering Information" and "Official Standards Proposal" is designated similarly.

Copyright National Electrical Manufacturers Association
Provided by IHS under license with NEMA
No reproduction or networking permitted without license from IHS
Not for Resale

BUSWAY SECTION
OF THE
NATIONAL ELECTRICAL MANUFACTURERS ASSOCIATION

MEMBER COMPANIES

Challenger Electric Equipment Corporation
Malvern, PA 19355

Eaton Corporation/Cutler-Hammer Products
Milwaukee, WI 53216

GE
Electrical Distribution and Control
Plainville, CT 06062

Siemens Energy and Automation
Electrical Apparatus Division
Spartanburg, SC 29304

Square D Company
Palatine, IL 60067

Westinghouse Electric Corporation
Beaver, PA 15009

Copyright National Electrical Manufacturers Association
Provided by IHS under license with NEMA
No reproduction or networking permitted without license from IHS
Not for Resale