National Electrical Manufacturers Association
2101 L Street, N.W. Suite 300
Washington, D.C. 20037 (202) 457-8400

PROPOSED, NEW AND REVISED STANDARDS

AB Page 26
March 2, 1987

TO ALL REPRESENTATIVES OF MEMBER COMPANIES
IN THE MOLDED CASE BREAKER SECTION

Subject: Revision No. **1** to the NEMA Standards Publication for *Molded Case Circuit Breakers and Their Application*, NEMA Pub. No. **AB 3-1984**.

Dear Representative:

At its meeting on January 20, 1987, the NEMA Codes and Standards Committee approved the attached revision of Section 7, page 39. The last two paragraphs of Section 7.1 have been deleted. Please insert the new page 39 into your copy of the book and remove the old page 39.

Also enclosed are a new front cover, a new member company page, and a new title page which shows your book now contains Revision No. 1.

Please insert these pages carefully since extra copies are not available.

Sincerely yours,

Krystyna Bagnato
Standards Publications Editor

Enc: Revision No. 1 to AB 3-1984
Copies to: All Known Holders of AB 3
pal

Copyright National Electrical Manufacturers Association
Provided by IHS under license with NEMA
No reproduction or networking permitted without license from IHS
Not for Resale

AB 3-84 6470247 0000392 0 A-11-01

NEMA STANDARDS PUBLICATIONS/NO. AB 3

nema

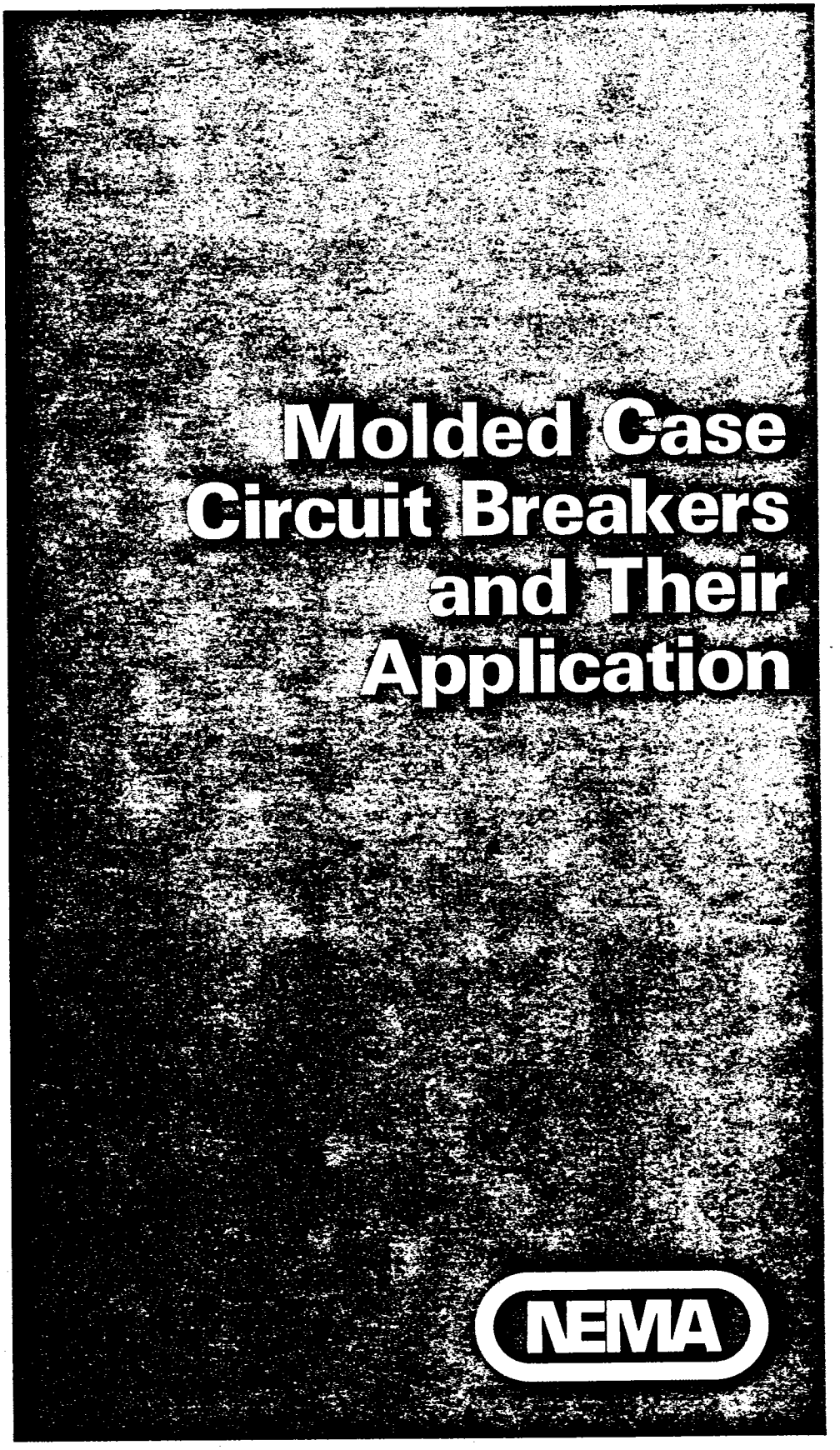

NATIONAL ELECTRICAL MANUFACTURERS ASSOCIATION ■ 2101 L STREET N.W., WASHINGTON, D.C. 20037

Copyright National Electrical Manufacturers Association
Provided by IHS under license with NEMA
No reproduction or networking permitted without license from IHS
Not for Resale

MOLDED CASE BREAKER SECTION
OF THE
NATIONAL ELECTRICAL MANUFACTURERS ASSOCIATION

MEMBER COMPANIES

BBC Brown Boveri, Inc.
West Columbia, SC 29171-4659

Challenger Electrical Equipment Corp.
Malvern, PA 19355

Electrical Distribution Product Division
A Division of Cooper Industries, Inc.
Charlottesville, VA 22906

Eaton Corporation
Cutler-Hammer Products
Milwaukee, WI 53216

General Electric Company
Plainsville, CT 06062

Heinemann Electric Company
Lawrenceville, NJ 08648-0800

Klockner Moeller Corporation
Natick, PA 01760

LCB Corporation
Miami, FL 33014

Siemens Energy & Automation
Tucker, GA 30084

Square D Company
Palatine, IL 60067

Unicorn Electrical Products
Anaheim, CA 92806

The Wadsworth Electric Mfg. Company
Covington, KY 41012

Westinghouse Electric Corporation
Beaver, PA 15009

Copyright National Electrical Manufacturers Association
Provided by IHS under license with NEMA
No reproduction or networking permitted without license from IHS
Not for Resale

AB 3

MOLDED CASE CIRCUIT BREAKERS AND THEIR APPLICATION

Revision No. 1—January 1987

Published by

National Electrical Manufacturers Association
2101 L Street, N.W.
Washington, D.C. 20037

© 1985 by National Electrical Manufacturers Association

Copyright National Electrical Manufacturers Association
Provided by IHS under license with NEMA
No reproduction or networking permitted without license from IHS
Not for Resale

TABLE OF CONTENTS

		Page
	FOREWORD	i
	SCOPE	ii
Section 1	INTRODUCTION	
	References	1
	General Definitions	4
	What is a Molded Case Circuit Breaker?	4
	What is a Molded Case Switch?	4
	Purpose of Overcurrent Protective Devices	4
Section 2	AVAILABLE TYPES OF MOLDED CASE CIRCUIT BREAKERS	
	General Usage Classifications	5
	Residential	5
	Industrial/Commercial	5
	Tripping Means	5
	Thermal-Magnetic	5
	Dual Magnetic	5
	Solid-State [Electronic]	5
	Specific Purpose Classifications	5
	High Capacity Breaker	5
	Integrally-Fused Circuit Breaker	5
	Current-Limiting Breaker	5
	Switching Duty Breaker (SWD)	5
	Instantaneous Only Breaker (Motor Circuit Protector or Circuit Interrupter)	6
	Heating, Air Conditioning, and Refrigeration Breakers (HACR)	6
	Marine Breakers	6
	U.S. Navy Breakers	6
	Mining Breakers	6
Section 3	AVAILABLE VARIATIONS IN MOLDED CASE CIRCUIT BREAKERS	
	Constructional Variations	7
	Frame	7
	Trip Unit	7
	Mechanism	7
	Pole	7
	Installation Variations	7
	External Conductor Connections	7
	Mounting Arrangements	7
	Handle Orientation	8
	Reverse Feed Circuit Breakers	8
	Specific Application Circuit Breakers	8
	Accessories	8
Section 4	MOLDED CASE CIRCUIT BREAKER RATINGS	
	Ampere Ratings	9
	Voltage Ratings	9
	Interrupting Ratings	9
	Frequency	9
Section 5	SELECTION OF MOLDED CASE CIRCUIT BREAKERS	
	Preliminary Considerations	10
	Electrical Parameters	10
	User Requirements	10

Copyright National Electrical Manufacturers Association
Provided by IHS under license with NEMA
No reproduction or networking permitted without license from IHS
Not for Resale

TABLE OF CONTENTS *(continued)*

		Page
	Environmental Conditions	10
	National Electrical Code Along With Any Other Local Codes or Safety Requirements, or Both	11
	General Considerations for Molded Case Circuit Breaker Application	11
	General Requirements	11
	The Main Circuit Breaker	11
	The Feeder Circuit Breaker	12
	The Branch Circuit Breaker	12
	Load Requirement Considerations	15
	Continuous Duty, General Purpose Load	15
	Lighting Loads	15
	Heating, Air Conditioning, and Refrigeration Loads	15
	Motor Loads	15
	Specific Considerations for Molded Case Circuit Breaker Applications	15
	Conductor Selection	15
	Terminations	15
	Single-Phasing Protection	17
	Time-Current Curves	17
	Selective Coordination	23
	Series Application	25
	Capacitor Switching	26
	Motor Loads	26
	Nuclear Power Generating Station Equipment Qualifications	27
	Considerations for Special Application Breakers	27
	Current-Limiting	27
	Ground Fault Protection	31
	Molded Case Switches	36
Section 6	STANDARDS FOR MOLDED CASE CIRCUIT BREAKERS	
	United States Standards	37
	NEMA Standards Publication AB 1	37
	NEMA Standards Publication AB 2	37
	Underwriters Laboratories Inc. UL 489	37
	Underwriters Laboratories Inc. UL 943	37
	NFPA 70	37
	NFPA 70B	37
	NFPA 70E	37
	Federal Specification W-C-375 B/GEN	38
	IEEE Publication 323	38
	Other Applicable Codes and Standards	38
	International Standards	38
	IEC 157-1	38
	IEC 157-2	38
	National Standards of Other Countries	38
	Canadian Standards Association (CSA)	38
	British Standard 3871—Parts 1 and 2	38
	German Standard—VDE 0660 Part 1	38
	Standard Association of Australia (SAA)	38
Section 7	MAINTENANCE AND FIELD TESTING	
	Normal Maintenance	39
	Field Testing	39
	Inspection for Damage	39
Appendix A	Abbreviations, Definitions, and Symbols	A-1
Appendix B	UL Requirements for Molded Case Circuit Breakers	A-6

Copyright National Electrical Manufacturers Association
Provided by IHS under license with NEMA
No reproduction or networking permitted without license from IHS
Not for Resale

Foreword

This publication is intended to provide a basis of common understanding within the electrical community concerning the proper application of molded case circuit breakers. To assure a meaningful publication, copies were sent during the draft stage to a number of individuals and organizations in the public and private sector having an interest in or responsibility for the purchase, testing, application, use, or inspection of this product category. Their resultant comments and suggestions provided a vital user and general interest input prior to final NEMA approval and resulted in a number of substantive changes being made in this publication. As future major revisions to this publication are proposed, it is intended to offer the same or similar individuals or organizations a further opportunity to participate in the development of this publication.

This publication will be periodically reviewed by the Molded Case Breaker Section of NEMA for any revisions necessary to keep them up to date with advancing technology. Proposed or recommended revisions should be submitted to:

Manager, Engineering Department
National Electrical Manufacturers Association
2101 L Street, N.W.
Washington, D.C. 20037

Copyright National Electrical Manufacturers Association
Provided by IHS under license with NEMA
No reproduction or networking permitted without license from IHS
Not for Resale

Scope

This application guide covers molded case circuit breakers and molded case switches, single-pole and multi-pole, fused and unfused, together with accessories used with them.

These circuit breakers and switches are assembled as integral units in supporting housings of insulating material and have rated voltages up to and including 1000 volts ac, 50/60Hz, 1200V dc, and rated interrupting currents of 5000 amperes or more.

This application guide addresses electrical systems with nominal ratings of 600 volts and below ac and 250 volts and below dc, which represent the preponderance of the general use application.

Wherever the term "circuit breaker" or "breaker" is used in this publication, it is understood to mean "molded case circuit breaker." Wherever the term "switch" is used in this publication, it is understood to mean "molded case switch."

Wherever the abbreviation UL appears it shall be understood to mean Underwriters Laboratories Inc.

Wherever the abbreviations *N.E.C.*, *N.E. Code,* or *Code* appear they shall be understood to mean the *National Electrical Code.*

Copyright National Electrical Manufacturers Association
Provided by IHS under license with NEMA
No reproduction or networking permitted without license from IHS
Not for Resale

MOLDED CASE CIRCUIT BREAKERS AND THEIR APPLICATION

(This Standards Publication with the Exception of Appendix A has been Classified as Authorized Engineering Information 11-15-84.)

Section 1

INTRODUCTION

1.1 References

In this publication, references are made to the standards listed below:

AMERICAN NATIONAL STANDARDS INSTITUTE

ANSI/IEEE Std. 344-1975 *IEEE Recommended Practices for Seismic Qualification of Class 1E Equipment for Nuclear Power Generating Stations*

ANSI/IEEE Std. 446-1980 *IEEE Recommended Practice for Emergency and Standby Power Systems for Industrial and Commercial Applications (IEEE Orange Book)*

ANSI/IEEE Std. 649-1980 *Qualifying Class 1E Motor Control Centers for Nuclear Power Generating Stations*

ANSI/IEEE Std. 650-1979 *IEEE Standard for Qualifiction of Class 1E Static Battery Chargers and Inverters for Nuclear Power Generating Stations*

ANSI/NEMA 250-1979 *Enclosures for Electrical Equipment (1000 Volts Maximum)*

ANSI/NFPA 70-1984 *National Electrical Code*

ANSI/NFPA 70B-1983 *Electrical Equipment Maintenance, Recommended Practice for*

ANSI/NFPA 70E-1983 *Electrical Safety Requirements for Employee Work Places*

ANSI/NFPA 302-1984 *Fire Protection Standard for Pleasure and Commercial Motor Craft*

BRITISH STANDARDS INSTITUTE

BS 3871 *Specifications for Miniature and Molded Case Circuit Breakers Part 1-1965—Miniature Air Break Circuit Breakers for AC Circuits*

BS 4752 *Specifications for Switchgear and Controlgear for Voltages Up to and Including 1000 VAC and 1200 VDC Part 1-1977: Circuit Breakers*

CANADIAN STANDARDS ASSOCIATION

CSA C22.2 #5-1963 *Service Entrance and Branch Circuit Breakers*

INSTITUTE OF ELECTRICAL AND ELECTRONIC ENGINEERS

(See also ANSI/IEEE Standards listed above.)

IEEE Std. 141-1976 *IEEE Recommended Practice for Electric Power Distribution for Industrial Plants (IEEE Red Book)*

Copyright National Electrical Manufacturers Association
Provided by IHS under license with NEMA
No reproduction or networking permitted without license from IHS
Not for Resale

IEEE Std. 242-1975 *IEEE Recommended Practice for Protection and Coordination of Industrial and Commercial Power Systems (IEEE Buff Book)*

IEEE Std. 323-1983 *Qualifying Class 1E Equipment for Nuclear Power Generating Stations*

INTERNATIONAL ELECTROTECHNICAL COMMISSION

157-1 (1973) *Part 1—Circuit Breakers*

157-2 (under development) *Circuit Breakers for Domestic and Similar Use*

NATIONAL ELECTRICAL MANUFACTURERS ASSOCIATION

(See also ANSI/NEMA Standards listed above.)

NEMA AB 1-1975 (R 1981) *Molded Case Circuit Breakers*

NEMA AB 2-1984 *Procedures for Verifying the Performance of Molded Case Circuit Breakers*

NEMA PB 2.2-1983 *Application Guide for Ground Fault Protective Devices for Equipment*

NEMA 280-1984 *Application Guide for Ground Fault Circuit Interrupters*

NATIONAL FIRE PROTECTION ASSOCIATION

(See ANSI/NFPA Standards listed above.)

STANDARDS ASSOCIATION OF AUSTRALIA

AS 2184-1980 *Molded Case Circuit Breakers (up to and including 600 VAC and 250 VDC) (Interrupting Ratings of 10 Ka and more)*

AS 3111-1983 *Approval and Test Specification for Miniature Overcurrent Circuit Breakers*

UNDERWRITERS LABORATORIES, INC.

UL 489-1980 *Molded-Case Circuit Breakers and Circuit-Breaker Enclosures*

UL 943-1972 *Ground-Fault Circuit Interrupters*

UL 1087 (Draft) *Proposed First Edition of the Standard for Molded Case Switches*

U.S. GOVERNMENT

WC 375-GEN-1975 *Federal Specification—Circuit Breakers, Molded Case: Branch Circuit and Service*

MIL-C-17361D (SH)-1977 *Circuit Breaker, Air, Electric, Insulated Enclosure (Shipboard Use)*

MIL-C-17588D (SH)-1981 *Circuit Breakers (Automatic—ALB) And Switch, Toggle (Circuit Breaker, Non Automatic—NIB) Air, Insulating Housing, 125 Volts and Below AC or DC (Naval Shipboard Use)*

USCG Electrical Systems Regulations, Subchapter S
(33 CFR, Part 183)

USCG Electrical Engineering Regulations, Subchapter J
(46 CFR, Parts 110-113)

Copyright National Electrical Manufacturers Association
Provided by IHS under license with NEMA
No reproduction or networking permitted without license from IHS

Not for Resale

VERBAND DEUTSCHER ELECTROTECHNICKER (VDE) e.V

VDE 0660-1982 — *Regulations for Low Voltage Switchgear Part 1/8.69 Regulations for Switches for Rated Voltages up to 1000 VAC and up to 3000 VDC and for Control Switches and Contactors up to 1000 VAC*

Copies of these standards can be purchased from the following:

American National Standards Institute
1430 Broadway
New York, NY 10018

British Standards Institute
2 Park Street
London, W1A2BS
Telephone: 016299000

Canadian Standards Association
178 Rexdale Blvd.
Rexdale, Ontario, Canada M9W1R3

Institute of Electrical and Electronic Engineers, Service Center
Publication Sales Department
445 Hoes Lane
Piscataway, NJ 08854

International Electrotechnical Commission
- Central Office of -
3, rue de Varembe,
Geneva, Switzerland

IEC Standards Also Available From:
American National Standards Institute

National Electrical Manufacturers Association
Order Department
2101 L Street, N.W.
Washington, DC 20037

National Fire Protection Association
Publications Sales Department
Batterymarch Park
Quincy, MA 02269

Standards Association of Australia
Standards House
80 Arthur St.
North Sidney, NSW, Australia

Underwriters Laboratories, Inc.
Publications Stock
333 Pfingsten Road
Northbrook, IL 60062

Copyright National Electrical Manufacturers Association
Provided by IHS under license with NEMA
No reproduction or networking permitted without license from IHS
Not for Resale

Section 2

AVAILABLE TYPES OF MOLDED CASE CIRCUIT BREAKERS

2.1 GENERAL USAGE CLASSIFICATIONS

2.1.1 Residential. Single or two-pole thermal-magnetic or magnetic (dashpot or hydraulic) breakers rated 225 amperes or less, 120 volts ac or 120/240 volts ac and having interrupting ratings of 22,000 amperes rms symmetrical or less are usually classified as residential circuit breakers.

2.1.2 Industrial/Commercial. Circuit breakers with ratings other than those covered under "residential" are usually classified as industrial/commercial circuit breakers.

2.2 TRIPPING MEANS

2.2.1 Thermal-Magnetic. The device provides overload, short-circuit and high-level ground fault protection. Overload sensing and tripping is obtained through the use of a bimetal, which is heated by the load current. During an overload condition, the bimetal deflects sufficiently to cause the breaker to trip or open mechanically. The larger the overload, the faster the tripping of the breaker; the smaller the overload, the longer it takes the breaker to trip. This is commonly called an inverse time principle.

Short-circuit or high-level ground fault protection, or both, is obtained through electromagnetic action. If the fault current reaches a predetermined value, the breaker trips instantaneously; that is without any intentional time delay.

2.2.2 Dual Magnetic. (Dashpot)(Hydraulic) On overload, the device operates on an inverse time principle by utilizing a magnetic coil surrounding a plunger which is restrained by air or liquid. As the magnetic field increases due to increased currents, the plunger increases its speed to unlatch the mechanism and open or trip the breaker in a shorter time.

Short-circuit and high-level ground fault protection by dual magnetic breakers is the same as that provided by a thermal-magnetic breaker.

2.2.3 Solid-State [Electronic]. On overload, the device operates on the inverse time principle. Current transformers or sensors are utilized in each pole of the breaker to sense the current. The solid-state circuitry measures and times the output from the current transformers. On overloads, short-circuits, or high-level ground faults, or both, the solid-state circuitry initiates an output to a delatching system. Also, this type of device can usually provide low-level ground fault protection.

2.3 SPECIFIC PURPOSE CLASSIFICATIONS

2.3.1 High Capacity Breaker. The principle of operation is the same as the standard thermal-magnetic or solid-state breaker, but its current interrupting capability is much higher.

2.3.2 Integrally-Fused Circuit Breaker. A combination of a thermal-magnetic breaker with current-limiting fuses contained within the same molded housing. The fuse prevents the development of the maximum prospective short-circuit current in the circuit. With this combination, much higher interrupting ratings are possible than those for standard thermal-magnetic and high capacity breakers.

2.3.3 Current-Limiting Breaker. A circuit breaker that does not employ a fusible element and that when operating within its current-limiting range, limits the let-through I^2t to a value less than the I^2t of a ½ cycle wave of the symmetrical prospective current.

2.3.4 Switching Duty Breaker (SWD). Circuit breakers rated 15 or 20 amperes and intended to switch 277 volts or less fluorescent lighting loads on a regular basis. These breakers are marked "SWD", (Reference Section 240-83(d) of the *National Electrical Code*).

Copyright National Electrical Manufacturers Association
Provided by IHS under license with NEMA
No reproduction or networking permitted without license from IHS
Not for Resale

U.S. Government Printing Office
Superintendant of Documents
Washington, DC 20402

Verband Deutscher Electrotechnicker (VDE)e.V
21 Strese Mannallee
6 Frankfurt a.M., Germany

1.2 GENERAL DEFINITIONS

NOTE: For a more detailed listing of definitions, symbols, and abbreviations, see Appendix A.

1.2.1 What is a Molded Case Circuit Breaker?

A molded case circuit breaker is a device, assembled as an integral unit in a supporting and enclosing housing of insulating material, designed to open and close a circuit by nonautomatic means, and to open the circuit automatically on a predetermined overcurrent, without injury to itself when properly applied within its rating.

1.2.2 What is a Molded Case Switch?

A molded case switch is a device assembled as an integral unit in a supporting and enclosing housing of insulating material designed to open and close a circuit by nonautomatic means.

It is stressed that molded case switches are not overcurrent protective devices, and have no overload, short-circuit, or high-level ground fault protection capability within their specified withstand rating. Some molded case switches, however, are provided with instantaneous trip mechanisms for the sole purpose of self protection against faults at levels above their withstand rating.

Having demonstrated by test their capability of making and breaking load currents of six times their marked ampere rating when switched, these switches can be applied where horsepower ratings are specified up to the maximum value of their continuous current rating.

1.3 PURPOSE OF OVERCURRENT PROTECTIVE DEVICES

Overcurrent protective devices are intended to protect electrical systems from extensive damage which can be caused when the components are subjected to electrical currents greater than those for which the systems are intended.

The electrical system components include electrical wire and cable, transformers, electrical controls, electrical distribution equipment, and utilization equipment such as motors, electrical machinery, electrical appliances, lighting, and so forth.

Overcurrent protective devices are intended to protect against one or more of the following:

1. Overloads
2. Short Circuits
3. High-Level Ground Faults.

The more commonly used overcurrent protective devices are fuses and circuit breakers.

This document will deal with circuit breakers, and more specifically, molded case circuit breakers.

Also included, because they are derivatives of molded case circuit breakers, are molded case switches. These are essentially molded case circuit breakers without automatic tripping capability within their specified withstand ratings. It should be stressed that molded case switches are not overcurrent protective devices; because they lack automatic tripping capability within their withstand ratings, they are compact enclosed switches with a high-current manual switching capability.

Copyright National Electrical Manufacturers Association
Provided by IHS under license with NEMA
No reproduction or networking permitted without license from IHS
Not for Resale

2.3.5 Instantaneous Only Breaker (Motor Circuit Protector or Circuit Interrupter). Provides short-circuit protection only, with no overload protection. Since external overload protection must be used with these breakers, they cannot be used for branch circuit protection. These breakers are used primarily as components in motor circuits in combination with motor starters in motor control centers and individual combination motor starters. They are also used in welding equipment for short- circuit protection only.

2.3.6 Heating, Air Conditioning and Refrigeration Breaker (HACR). The *National Electrical Code* permits the use of inverse-time circuit breakers to protect multimotor and combination-load installations involved in heating, air conditioning and refrigerating (HACR) equipment provided the breakers have been approved for group installation (Reference Section 430-53(c) of the *National Electrical Code*).

Circuit breakers complying with UL requirements for this type of application will be marked "Listed HACR Type."

2.3.7 Marine Breakers. These breakers are intended to be applied on board a boat or ship. Applicable requirements are NFPA 302, applicable publications of the American Boat and Yacht Council, Inc., IEEE specifications 45, subchapters S and J of the regulations of the U.S. Coast Guard and UL 489, supplement paragraphs S1 through S10.

2.3.8 U.S. Navy Breakers. These circuit breakers are intended for installation aboard U.S. Naval ships and conform to military specifications MIL-C-17361 and MIL-C-17588.

2.3.9 Mining Breakers. These breakers are specifically designed for mining duty applications and permit the user to comply with mandatory mine safety standards.

Copyright National Electrical Manufacturers Association
Provided by IHS under license with NEMA
No reproduction or networking permitted without license from IHS
Not for Resale

Section 3

AVAILABLE VARIATIONS IN MOLDED CASE CIRCUIT BREAKERS

3.1 CONSTRUCTIONAL VARIATIONS

3.1.1 Frame. An assembly consisting of all parts of a circuit breaker except an interchangeable trip unit or accessories.

Frame size is given in amperes, and is normally the maximum ampere rating in a particular group. Frame size does not necessarily indicate physical interchangeability.

3.1.2 Trip Unit. An assembly within the circuit breaker frame that causes the breaker to open automatically under sustained overload, short-circuit, or high level ground fault conditions. The trip unit may be electromechanical or solid-state.

Trip units operate such that an overload or fault on any one pole will cause all poles to open simultaneously to prevent single phasing.

Trip units may be fixed or interchangeable. The continuous current rating of circuit breakers with interchangeable trip units can be changed in the field. Circuit breakers with fixed electromechanical trip units have fixed continuous current ratings. Generally, in the larger frame size breakers, instantaneous trip range is field adjustable.

Solid-state trip units, either fixed or interchangeable, may have any or all of the following types of adjustments: long time pick-up or ampere setting, long time delay, short time pick-up, short time delay, instantaneous pick-up, ground fault pick-up, or ground fault time delay.

3.1.3 Mechanism. The means by which the main circuit breaker contacts are actuated.

All breaker mechanisms utilize stored energy for tripping.

The closing operations are usually performed by one of two methods. The most prevalent is the overcenter toggle type of mechanism which closes the breaker contacts by a manual movement of the breaker handle. The manual opening of the contact is also actuated by the movement of the breaker handle.

The second method is used on some of the larger breakers, and is called "stored energy." With this method, the energy is stored in springs which may be released either manually or electrically to close the breaker contacts. The manual opening of the breaker is normally accomplished by releasing the energy stored in the trip mechanism.

3.1.4 Pole. The conducting path of a main contact. Circuit breakers are either single-pole, two-pole, three-pole, or four-pole with all poles electrically separate. Multi-pole breakers are mechanically tied together through the mechanism, such that all poles operate together. Two single-pole circuit breakers may be mounted in a single housing without a mechanical tie.

3.2 INSTALLATION VARIATIONS

3.2.1 External Conductor Connections

3.2.1.1 FRONT-CONNECTED. A front-connected circuit breaker is one in which the terminals for connecting or disconnecting conductors are accessible from the front of the breaker.

3.2.1.2 REAR-CONNECTED. A rear-connected circuit breaker is one in which the current-carrying conductors are connected to terminals accessible from the back of the breaker.

3.2.2 Mounting Arrangements

3.2.2.1 STATIONARY-MOUNTED. A stationary-mounted circuit breaker is one that cannot be removed except by unbolting the current-carrying connections and mounting supports. Rigidly attached, external current-carrying conductors may be either cable, threaded studs, or bus bars.

Stationary-mounted branch breakers used in panelboard construction usually have line side conductors bolted to the panelboard main bus.

Copyright National Electrical Manufacturers Association
Provided by IHS under license with NEMA
No reproduction or networking permitted without license from IHS
Not for Resale

3.2.2.2 PLUG-IN MOUNTED. A plug-in mounted circuit breaker is one that is installed in a manner that permits it to be readily removed from the supporting structure in which it is installed and from the line or load side stationary conductors, or both, to which it is attached.

Plug-in branch breakers used in panelboard construction have line side conductors that plug into the panelboard main bus.

Plug-in connections for accessory wiring may also be provided. The circuit breaker may be equipped with a mechanical interlock that only permits the removal or insertion of the circuit breaker when its mechanism is in the "open" position.

3.2.2.3 DRAWOUT-MOUNTED. A drawout-mounted circuit breaker is one in which the removable element may be readily removed from the stationary portion with a racking mechanism without unbolting the current-carrying connections or mounting supports.

The drawout racking mechanism will permit the circuit breaker to be in either the fully "connected" or "disconnected" positions and may provide a "test" position where the primary current-carrying conductors are fully disconnected and separated by a safe distance from those in the stationary housing portion of the assembly and the accessory control wiring connections are "engaged" for "test" purposes.

The accessory control wiring may be automatically connected and disconnected with the action of the circuit breaker racking mechanism or it may require a separate manual disconnecting operation.

The racking mechanism may be equipped with a mechanical interlock that permits the movement of the circuit breaker from or into the "connected" position only with the circuit breaker in the "open" position.

3.2.2.3.1 CELL POSITION SWITCH. A control accessory device that is used to signal the location of a circuit breaker within a drawout assembly. The device is mounted in the stationary housing portion of the drawout assembly and signals the movement of the circuit breaker between the "connected" and "test" positions.

3.2.2.3.2 SHUTTER. A device that is automatically operated to completely cover the stationary portion of the primary current-carrying conductors when the removable circuit breaker is either in the "test" or "disconnected" position or has been removed.

3.3 HANDLE ORIENTATION

The *National Electrical Code* states in Section 240-81 that where circuit breaker handles on switchboards or in panelboards are operated vertically, rather than rotationally or horizontally, the "up" position of the handle shall be the "on" position.

Section 380-8 of the *National Electrical Code* states that all switches and circuit breakers used as switches shall be located so that they may be operated from a readily accessible place. They shall be installed so that the center of the grip of the operating handle of the switch or circuit breaker when in its highest position will not be more than 6½ feet (1.95 meters) above the floor or working platform. An exception to this is circuit breaker busway plugs, which can be hook stick operated.

3.4 REVERSE FEED CIRCUIT BREAKERS

UL 489 specifies that a circuit breaker shall be marked "line" and "load" except for noninterchangeable trip circuit breakers which have been tested and found acceptable for reversed line and load connection.

3.5 SPECIFIC APPLICATION CIRCUIT BREAKERS

Most manufacturers of circuit breakers can supply circuit breakers that vary in some degree from breakers manufactured to NEMA or UL standards. This variance could be in rating, calibration, accessories, mounting, or in a combination of these characteristics. The manufacturer should be consulted regarding these specific applications.

3.6 ACCESSORIES

Devices added to breakers that perform secondary functions. Some accessories, such as shunt trip releases, undervoltage releases, and auxiliary switches may be internally mounted; while such accessories as electrical operators, mechanical interlocks, handle locking devices, and so forth, are generally externally mounted.

Most external accessories are suitable for field installation. Some internal accessories may be field installable in interchangeable trip type circuit breakers. UL does place restrictions on the installation of internal accessories in the field. Therefore, the manufacturer should be consulted for specific instructions.

Copyright National Electrical Manufacturers Association
Provided by IHS under license with NEMA
No reproduction or networking permitted without license from IHS
Not for Resale

Section 4

MOLDED CASE CIRCUIT BREAKER RATINGS

4.1 AMPERE RATINGS

Standard ampere ratings for inverse time circuit breakers are included in the *National Electrical Code* (Section 240-6) as follows: 15, 20, 25, 30, 35, 40, 45, 50, 60, 70, 80, 90, 100, 110, 125, 150, 175, 200, 225, 250, 300, 350, 400, 450, 500, 600, 700, 800, 1000, 1200, 1600, 2000, 2500, 3000, 4000, 5000, and 6000 amperes.

4.2 VOLTAGE RATINGS

For ac distribution systems, molded case circuit breakers are available with one or more of the following voltage ratings: 120, 120/240, 240, 277, 480Y/277, 480, and 600 volts. For specific applications, voltage ratings to 1000 volts ac are available.

For dc application, molded case circuit breakers are available with one or more of the following voltage ratings: 125, 125/250, 250, 500, or 600 volts dc.

For specific application or other voltage ratings, consult the manufacturer.

4.3 INTERRUPTING RATINGS

Typical ac molded case circuit breaker interrupting ratings in rms symmetrical amperes are as follows:

5,000	22,000	50,000	125,000
7,500	25,000	60,000	150,000
10,000	30,000	65,000	200,000
14,000	35,000	70,000	
18,000	42,000	85,000	
20,000	45,000	100,000	

Typical dc interrupting ratings are 5,000, 10,000, and 20,000 amperes.

The use of two-pole circuit breakers in three-phase, corner-grounded delta applications requires special considerations. Unless the breaker is marked and rated for this application, consult the manufacturer.

4.4 FREQUENCY

Molded case circuit breakers may be used for ac or dc applications as defined and marked by the manufacturer. ac circuit breakers are rated for use on 50/60Hz systems unless otherwise noted.

As the system frequency increases above the standard 60Hz rating, the increased eddy currents in the conductors and the iron losses in the magnetic materials cause greater heating within the breaker. For all circuit breakers applied at frequencies other than 50/60Hz values, consult the manufacturer for specific application details.

Copyright National Electrical Manufacturers Association
Provided by IHS under license with NEMA
No reproduction or networking permitted without license from IHS
Not for Resale

Section 5

SELECTION OF MOLDED CASE CIRCUIT BREAKERS

5.1 PRELIMINARY CONSIDERATIONS

Selection of the proper molded case circuit breaker depends on a thorough knowledge of the following system data:

5.1.1 Electrical Parameters

1. System Voltage Rating—Phase-to-Phase and Phase-to-Neutral
2. System Loads—Values and Types
3. System Frequency
4. System Phasing—Single or Multiphase
5. Proposed Location on System—Main, Feeder, Branch Circuit, and so forth
6. Available Short Circuit Current at Breaker Line Terminals
7. Continuous Current and Interrupting Ratings Required.

5.1.2 User Requirements

User's application requirements, for example, application specifications, mode of operation, maintenance capabilities, and so forth.

5.1.3 Environmental Conditions

Environmental conditions, including ambient temperature, altitude, humidity, vibration, and mechanical shock, and any other specific environments concerned with marine or nuclear applications.

5.1.3.1 Excessively High or Low Ambient Temperatures

Molded case circuit breakers are calibrated at 100 percent of rated current in open air for a given ambient temperature (usually 25° or 40°C). Where the ambient temperature is known to differ significantly from the calibration temperature, the breaker used should be specially calibrated for that ambient or be rerated accordingly. Consult the manufacturer.

When the expected range of ambient air temperature around the circuit breaker is lower than −5°C or higher than 40°C, breaker operation may be affected. Consult the manufacturer for recommendations.

5.1.3.2 Atmospheric Conditions

Molded case circuit breakers are designed to perform satisfactorily under clean air conditions where relative humidity does not exceed 50 percent at a maximum temperature of +40°C (104°F). For atmospheres having a higher moisture content at this temperature or where fungus growth is prevalent, or both, a special factory treatment may be required to resist moisture and fungi. Consult the manufacturer.

5.1.3.3 Corrosive Atmosphere

Where the atmosphere is heavily laden with corrosive salts, vapors, or fumes, molded case circuit breakers may require special corrosion-resistant finishes or enclosures, or both. Consult the manufacturer.

For excessive or abrasive dust conditions, it is generally recommended that molded case circuit breakers be mounted in enclosures approved for that application. See ANSI/NEMA Standards Publication 250.

5.1.3.4 Abnormal Vibration or Mechanical Shock

Applications involving vibration or mechanical shock conditions should be referred to the manufacturer.

5.1.3.5 Altitude

At altitudes above 6600 feet, molded case circuit breakers should be progressively derated for voltage or interrupting capabilities, or both. Consult the manufacturer.

Copyright National Electrical Manufacturers Association
Provided by IHS under license with NEMA
No reproduction or networking permitted without license from IHS
Not for Resale

5.1.3.6 HARMONICS

Trip units are generally designed to be nonresponsive to load or circuit conditions that generate minor harmonic distortion. However, for certain load conditions where the known load current wave shapes are nonsinusoidal, the manufacturer should be consulted for recommendations before application is made.

Cyclic loads with sinusoidal wave shapes, such as occur in welding circuits, should also be reviewed with the manufacturer. Since welding loads are intermittent and produce an overload for a short period of time, solid-state trip units equipped with memory circuits could initiate nuisance trip signals. The frequency or probability, or both, of this occurring will depend upon the "during weld" current and "duty cycle." Specific welding applications with known welding current parameters should be referred to the manufacturer. Memory circuit modifications may be required.

5.1.4 *National Electrical Code* Along With Any Other Local Codes or Safety Requirements, or Both

The selection of a specific ampere rating for a given application is dependent upon the type of load, duty cycle, and/or point of application. In general, the *National Electrical Code* requires overcurrent protection at the supply and at points where wire sizes are reduced. It further states that the conductors be protected in accordance with their ampacities, but lists exceptions for applications such as motor circuits where a higher ampere rating is often required to carry motor inrush currents.

Section 110-9 of the *National Electrical Code* clearly defines the minimum interrupting rating that protective equipment shall have, for example, the interrupting rating sufficient for the system voltage and the fault current available at the line terminals of the equipment.

Where equipment is intended to break current at other than fault levels, it should have an interrupting rating at system voltage sufficient for the current that must be interrupted.

Section 110-10 of the *National Electrical Code* defines how the protective equipment along with the other circuit components shall perform when clearing a fault.

Some other performance requirements to be considered include:

Ground Fault Requirements under Section 230-95 of the *National Electrical Code*

Health Care Facility Feeder Selectivity Ground Fault Requirement under Section 517-14 of the *National Electrical Code*

Feeder and Branch Circuit Breakers—

Fire Pump Circuit Breakers under Section 230-90(a), Exception No. 5, of the *National Electrical Code*

Circuit Breakers used as Switches in Fluorescent Lighting Circuits—

Under Section 240-83(d) of the *National Electrical Code*, marked "SWD"

Circuit Breakers used for Group Motor Overcurrent Protection under Section 430-53 of the *National Electrical Code*, marked "HACR"

Special requirements associated with nuclear Class 1E Equipment

5.2 GENERAL CONSIDERATIONS FOR MOLDED CASE CIRCUIT BREAKER APPLICATION

5.2.1 General Requirements

In keeping with the user's specifications and single-line wiring diagram, the circuit breaker should be selected with the type of mounting arrangement, physical configuration, terminations, operating characteristics, and accessories required for the installation.

The circuit breaker selected should be the best suited for the available environmental surroundings and operating conditions.

The circuit breaker selected should satisfy all national and local *Code* requirements while providing the maximum protection and greatest degree of reliability with minimum maintenance requirements.

5.2.2 The Main Circuit Breaker

The main circuit breaker in most installations generally means the main service circuit breaker. It is located near the point of entrance of the supply conductors to a building and is the main means of disconnecting the supply. A service includes conductors and equipment for delivering electrical power from the supply system to the distribution system of the premises served.

The ampere rating of the main service circuit breaker should be selected so that the rating will not be higher than the allowable ampacity of the service-entrance conductors in compliance with Section 230-90 of the *National Electrical Code.*

Copyright National Electrical Manufacturers Association
Provided by IHS under license with NEMA
No reproduction or networking permitted without license from IHS
Not for Resale

The interrupting rating should be selected so that it will be equal to or greater than the available fault current at the supply terminals in compliance with Section 110-9 of the *National Electrical Code.* The voltage and frequency ratings should be as required for the distribution system.

If the system and main service circuit breaker requirements fall within the parameters defined in Section 230-95 of the *National Electrical Code,* the circuit breaker selected should have suitable integral ground fault protection or should be one that can operate in conjunction with separately mounted ground fault protection devices.

The circuit breaker selected should be equipped with the appropriate short time rating or time/current tripping characteristics, or both, to provide the type of selective coordination required by the user's specifications.

Ideally, for maximum continuity of service, the selection and time-current settings of the main service breaker should permit the downstream breakers and the distribution system to operate in a selectively coordinated fashion. For a downstream fault, only the circuit breaker nearest upstream from the fault should open, leaving the rest of the system intact, thus maintaining continuity of service to the balance of the system.

5.2.3 The Feeder Circuit Breaker

A feeder consists of all circuit conductors between the service equipment, or the generator switchboard, and the final branch-circuit overcurrent device.

The ampere rating of the feeder circuit breaker should be selected in accordance with Section 220-10 of the *National Electrical Code* so that the rating will be no less than the noncontinuous load plus 125 percent of the continuous load served.

> *EXCEPTION:* Where the assembly including the feeder circuit breaker is UL listed for operation at 100 percent of its ampere rating, the circuit breaker rating may be selected on the basis of the sum of the non-continuous load plus the continuous load served.

Only circuit breakers that are listed and marked for 100 percent application and mounted in suitable enclosures may be applied in accordance with this exception. All other circuit breakers are applied at 80 percent or less of their ampere rating for continuous loads (three hour or greater duration).

For a specific fixed motor load, the ampere rating of the feeder circuit breaker should be selected so that it is no greater than the largest rating for the branch circuit protective device (based on *National Electrical Code* Table 430-152) plus the sum of the full load currents of the other motors in the group (Section 430-62 of the *National Electrical Code*).

On feeder circuits used for large capacity motor installations where future additions are expected, the ampere rating of the feeder circuit breaker should comply with the rated ampacity of the feeder conductors (Section 430-62(b) of the *National Electrical Code*).

Typical feeder circuits with lighting and single or multiple motor loads are shown in Figures 5-1 and 5-2.

The interrupting rating should be equal to or greater than the available fault current at the line side terminals in compliance with Section 110-9 of the *National Electrical Code.* The voltage and frequency ratings should be as required for the distribution system.

Where applicable, the use of listed series tested molded case circuit breaker combinations may be considered. See 5.4.6.

If ground fault protection is required on the main breaker, as defined in Section 230-95 of the *National Electrical Code,* consider the selection of a feeder circuit breaker with suitable integral ground fault protection or one that can operate in conjunction with separately mounted ground fault protective devices.

This additional level of ground fault protection is mentioned in the fine print note (FPN) of Section 230-95 of the *National Electrical Code,* where maximum continuity of electrical service is necessary for general installations and is mandatory for health care facilities per Section 517-14.

As may be required in the user's specifications, the circuit breaker selected should have the appropriate short time rating or time current tripping characteristics, or both, to provide the type of selective coordination required.

5.2.4 The Branch Circuit Breaker

A branch circuit is that portion of a distribution system extending beyond the final overcurrent device protecting the circuit. Branch circuits are intended to serve lighting, appliance, motor and/or other single loads.

In general, the continuous load supplied by a branch circuit should not exceed 80 percent of the branch-circuit rating, unless the assembled equipment, including overcurrent devices, is approved for continuous operation at 100 percent of its ampere rating.

The ampere rating of the circuit breaker should not exceed the specified values as shown in Section 240-3 of the *National Electrical Code* for conductors; in Section 240-2 for equipment; and in Section 210-21 for outlet devices.

The interrupting rating of the branch circuit breaker should be equal to or greater than the available fault current at the line side terminals in compliance with *National Electrical Code* Section 110-9. The voltage and frequency ratings should be as required for the distribution system.

Copyright National Electrical Manufacturers Association
Provided by IHS under license with NEMA
No reproduction or networking permitted without license from IHS
Not for Resale

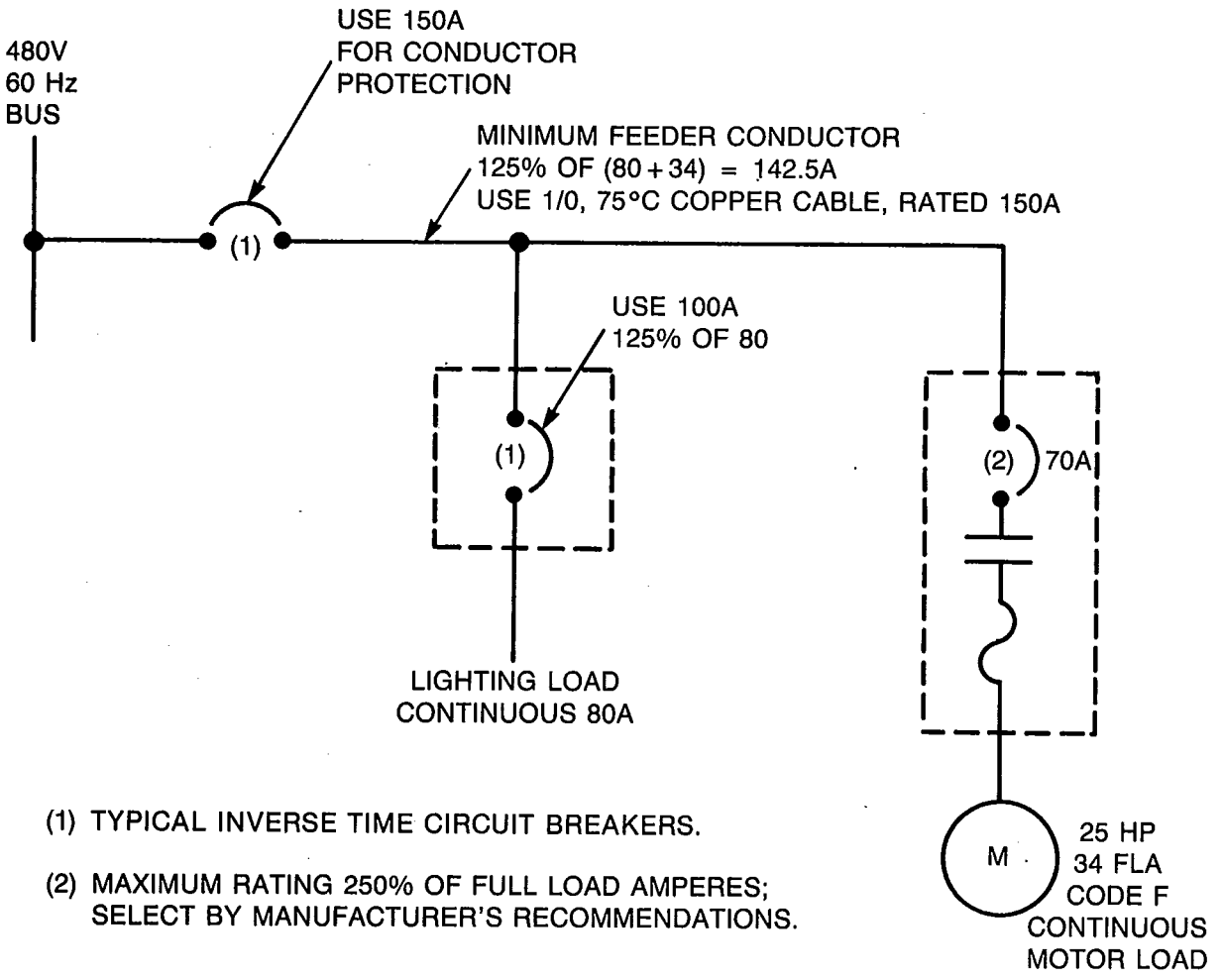

Figure 5-1
TYPICAL FEEDER CIRCUIT
(LIGHTING LOAD AND SINGLE FIXED MOTOR LOAD)

Copyright National Electrical Manufacturers Association
Provided by IHS under license with NEMA
No reproduction or networking permitted without license from IHS
Not for Resale

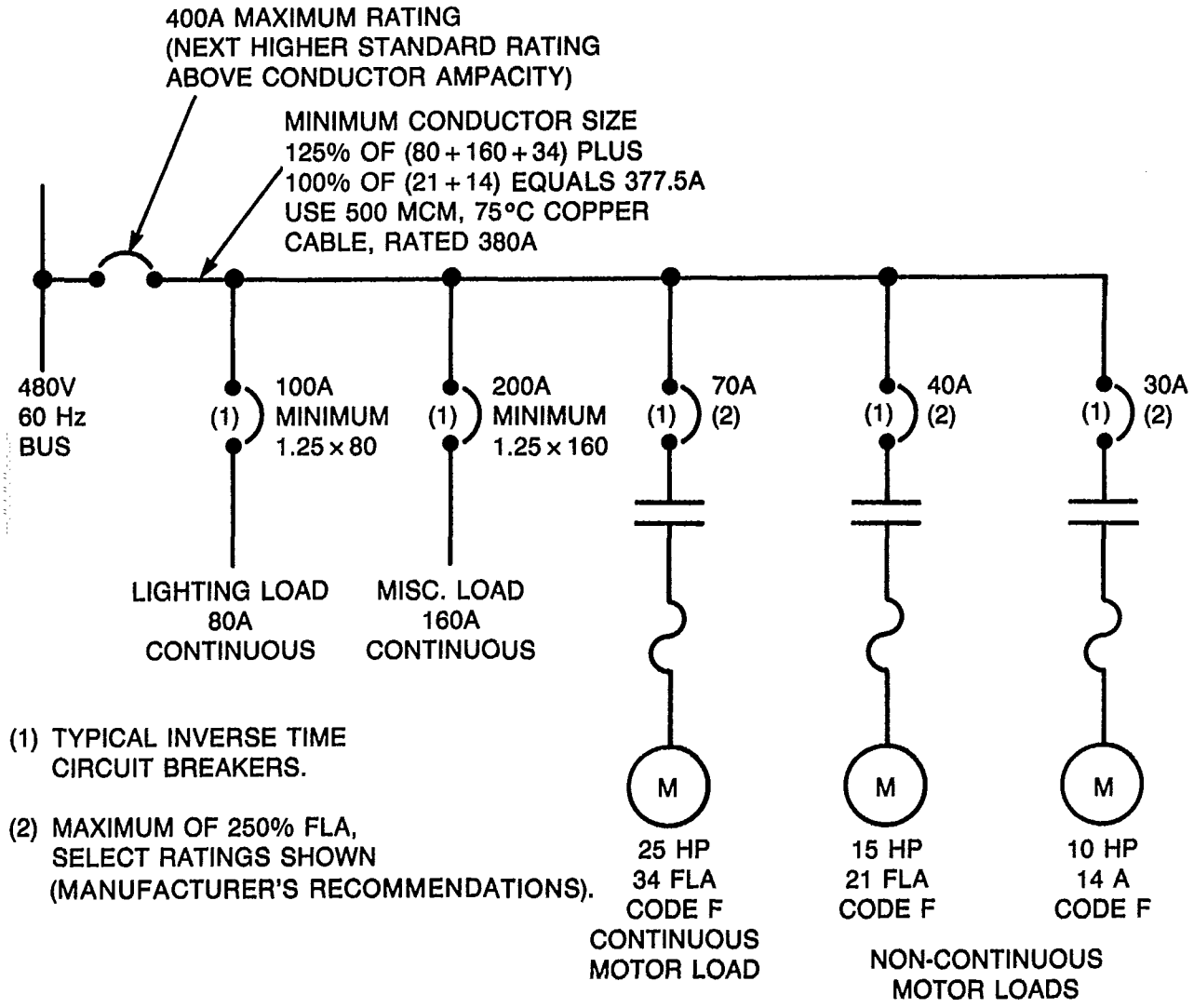

Figure 5-2
TYPICAL FEEDER CIRCUIT
(COMBINATION AND MULTIPLE MOTOR LOADS)

Copyright National Electrical Manufacturers Association
Provided by IHS under license with NEMA
No reproduction or networking permitted without license from IHS
Not for Resale

Where applicable, the use of listed series tested molded case circuit breaker combinations should be considered. See 5.4.6.

If ground fault protection is required on the main breaker as defined in Section 230-95 of the *National Electrical Code* and is also included on the feeder breaker, the user should consider selecting a branch circuit breaker with suitable integral ground fault protection or one that can operate in conjunction with separately mounted ground fault protective devices.

This additional level of ground fault protection is mentioned in the fine print note (FPN) of Section 230-95 of the *National Electrical Code* where maximum continuity of electrical service is necessary.

For specific 15 and 20 ampere, 125 volt single phase receptacle circuits, as defined in *National Electrical Code* Article 210-8, the user should select ground fault circuit interrupters equipped to provide personnel protection.

5.3 LOAD REQUIREMENT CONSIDERATIONS

A paramount consideration in selecting a circuit breaker is the load itself. Attention should be given to the type of equipment comprising the load, the normal continuous/non-continuous current to be carried, the ON-OFF duty cycle, and so forth. There are load conditions that will call for the use of circuit breakers having time-current characteristics or other operating features, or both, fine-tuned for the particular application.

The following are examples of loads frequently encountered:

5.3.1 Continuous Duty, General Purpose Load

Selection of a standard inverse time circuit breaker, sized 125 percent of the continuous load current is usually recommended. There are cases on larger amperage loads where it might be desirable to use a circuit breaker rated to carry 100 percent current continuously. Breakers rated for this application are specifically marked.

5.3.2 Lighting Loads

For circuits involving the switching of fluorescent lighting loads, there are breakers especially designed and tested for that purpose. These breakers are marked "SWD".

For high intensity discharge lighting, high wattage security lighting and other special lighting applications, the circuit breaker manufacturers can recommend devices designed for the purpose.

5.3.3 Heating, Air Conditioning, and Refrigeration Loads

Select circuit breakers marked "HACR" which are designed, tested, and listed for the multi-motor and combination loads encountered in heating, air conditioning, and refrigeration equipment.

Pulsating loads, such as welders and induction devices, require special considerations to prevent nuisance tripping. Consult the manufacturer.

5.3.4 Motor Loads

Since motor loads are so important and prevalent in industrial and commercial applications, they are covered separately in 5.4.8.

This list is not intended to cover all possible types of loads and combinations of loads, but the examples are cited to illustrate a few of the loading variations that should be considered. If there are any questions about the proper breaker for an application, contact the manufacturer of the circuit breaker or equipment, or both.

5.4 SPECIFIC CONSIDERATIONS FOR MOLDED CASE CIRCUIT BREAKER APPLICATIONS

5.4.1 Conductor Selection

The prime requisite of a molded case circuit breaker is to protect the circuit conductors. In order for the circuit breaker to provide this protection, the user should ensure that the breaker and conductors are properly matched.

5.4.1.1 TEMPERATURE RATING OF CONDUCTOR. The manufacturer's specific recommendations for insulated conductors to be used with breakers are: breakers rated 125 amperes or less are calibrated to use 60°C rated wire, unless otherwise marked; breakers rated above 125 amperes are calibrated to use 75°C rated wire, unless otherwise marked.

Copyright National Electrical Manufacturers Association
Provided by IHS under license with NEMA
No reproduction or networking permitted without license from IHS
Not for Resale

It should be noted that some circuit breakers rated 125 amperes or less are marked 60°/75°C and are suitable for use with conductors of either temperature rating.

Wire rated for higher temperatures, such as 90°C, may be used if the conductor size is determined by either the 60° or 75°C size, as appropriate.

In certain cases involving circuit breakers suitable for operation at 100% of their rating, 90°C conductors, sized in accordance with 75°C ampacity, are used.

Refer to marking on the circuit breaker or consult the manufacturer.

5.4.1.2 CONDUCTOR AMPACITY. Copper (Cu) and Aluminum (Al) are the most widely used conducting materials. The ampacities of most commonly used types are listed separately in Tables 310-16 thru 310-19 of the *National Electrical Code.* In order to apply the tables correctly, consideration should be given to the correction factors and notes which are an integral part of the tables.

A Word of Caution! The standards that determine the size of conductors inside a factory-wired assembly may be different from the standards used for branch circuits. Therefore, the size of the factory wiring should not be used to determine the size of the branch circuit wiring.

5.4.2 Terminations

Terminations provide the means of connecting the molded case circuit breaker to both the power source and the load. Due to the importance of electrical connections which can affect the performance of the molded case circuit breaker, consideration should be given to the proper selection, application, and installation of the molded case circuit breaker terminations.

Various methods of connections include bolted, plug-in, and terminal connectors (lugs). In some cases, more than one method will be used on the same molded case circuit breaker. For example, a breaker could have plug-in connections on one end to connect to a panelboard bus and terminal connectors on the other to connect to cables. Plug-in connectors should be used with equipment specifically designed to accept them.

When terminal connectors are used to connect the breaker, only those terminal connectors specified by the manufacturer for use with the molded case circuit breaker should be used. When alternate means of connection are desired, consult the manufacturer.

Copyright National Electrical Manufacturers Association
Provided by IHS under license with NEMA
No reproduction or networking permitted without license from IHS
Not for Resale

Cables should be terminated according to the instructions furnished by the manufacturer. Particular care should be taken not to exceed the recommended stripping length to avoid the possibility of reduced electrical clearances. Terminal connections should be torqued according to specifications provided by the manufacturer.

Terminal connectors are available which are suitable for use with both copper and aluminum and are marked Al/Cu. Special care should be taken to follow the manufacturer's installation instructions.

5.4.3 Single-Phasing Protection

A three-phase motor running without current in one phase is said to be "single-phasing."

When a multipole circuit breaker opens, all poles open simultaneously thus preventing "single-phasing." Single-phasing conditions can cause shock hazard, motor overheating, and other equipment damage.

5.4.4 Time-Current Curves

Manufacturers of molded case circuit breakers publish time-current curves that are used for coordination with protection devices in the distribution system. Circuit protective devices that are selectively coordinated through normally encountered overcurrent ranges, with respect to their time-current curves, will enable the nearest protective device upstream from a fault condition to open first. This leaves the balance of the distribution system intact and the greatest degree of service continuity will be maintained. Time-current curve types may be generally divided into categories determined by the type of trip unit employed in the circuit breaker and the type of adjustments available, including:

1. Nonadjustable
   - Fixed Long Time
   - Fixed Instantaneous
2. Partially Adjustable
   - Fixed Long Time
   - Adjustable Instantaneous
3. Fully Adjustable
   - Long Time Pick-Up or Ampere Setting
   - Long Time Delay
   - Short Time Pick-Up
   - Short Time Delay
   - Instantaneous Pick-Up
   - Ground Fault Pick-Up
   - Ground Fault Time Delay

5.4.4.1 NONADJUSTABLE

Circuit breakers in the current range up to 150 amperes generally have nonadjustable time-current characteristics. A typical curve of a 100 amperes, 2 and 3-pole, thermal-magnetic circuit breaker is shown in Figure 5-3. The curve is for application and coordination purposes only. It is based on 40 °C ambient cold start when connected with 4 feet of rated wire per terminal. The circuit breaker is tested in open air with current in all poles. As a convenience for field testing, individual pole test data for 300 percent rated current at 25 °C is shown in NEMA Standards Publication AB 2.

In the upper or long-time portion of a type curve, the delays are in seconds with shorter time delays as the current increases thus, the term "inverse time characteristic." As the current reaches the instantaneous range, the trip time decreases drastically to where no intentional time delay occurs. Maximum and minimum trip times are shown across the trip range. Since the circuit breaker must carry 100 percent of its rated current in open air at 40 °C (104 °F) without tripping, it should be noted that the minimum trip time is shown on the plus side of 100 percent of the breaker rating.

Since many time-current curves cover a range of continuous current ratings (such as from 90 to 150 amperes), the manufacturer should be consulted where specific time-current curves are required for close coordination purposes.

5.4.4.2 USING BREAKER TIME-CURRENT CURVES

NOTE: All examples refer to Figure 5-4.

Copyright National Electrical Manufacturers Association
Provided by IHS under license with NEMA
No reproduction or networking permitted without license from IHS
Not for Resale

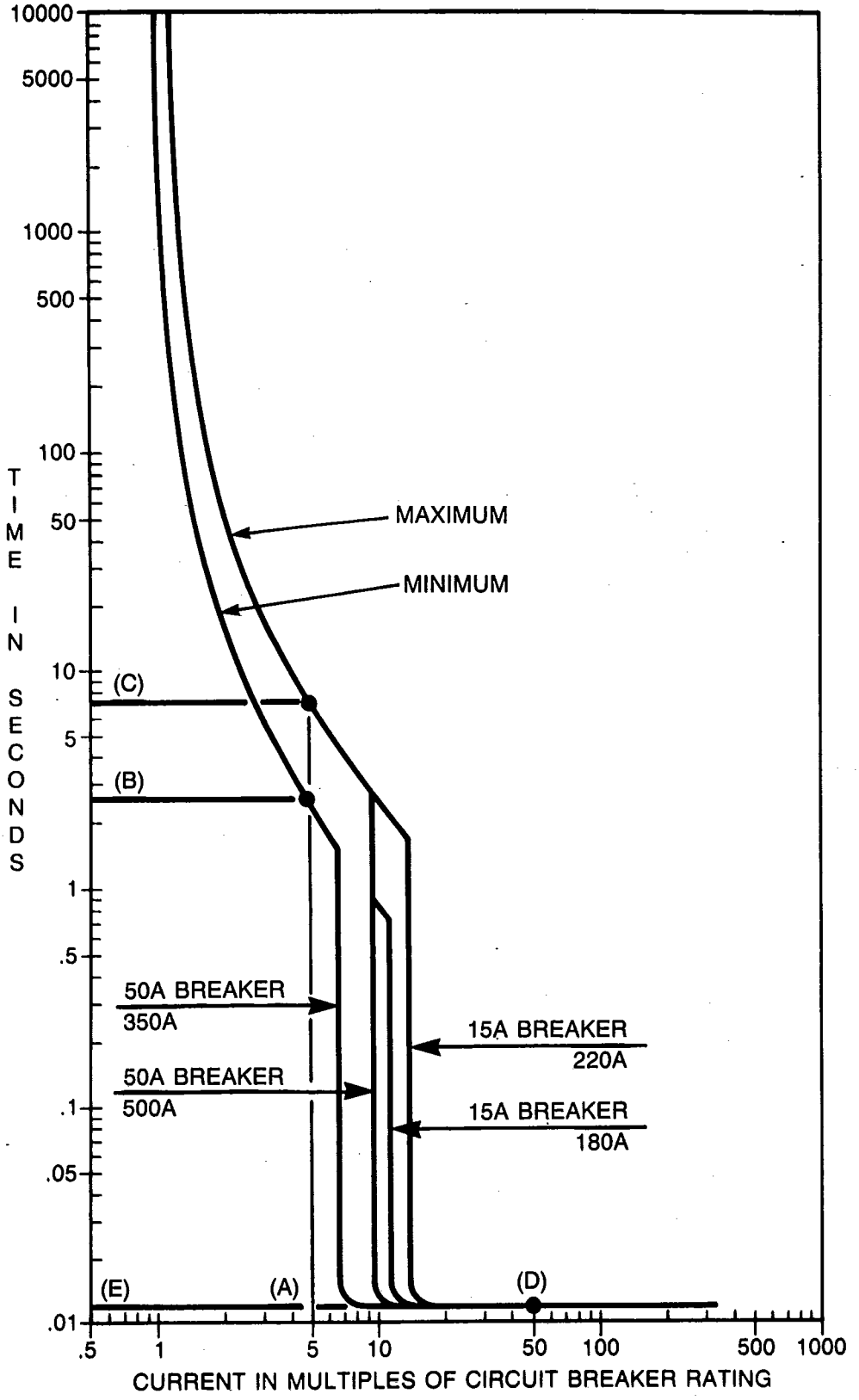

Figure 5-4
SAMPLE TIME-CURRENT CURVE
15A AND 50A CIRCUIT BREAKERS

Copyright National Electrical Manufacturers Association
Provided by IHS under license with NEMA
No reproduction or networking permitted without license from IHS

Not for Resale

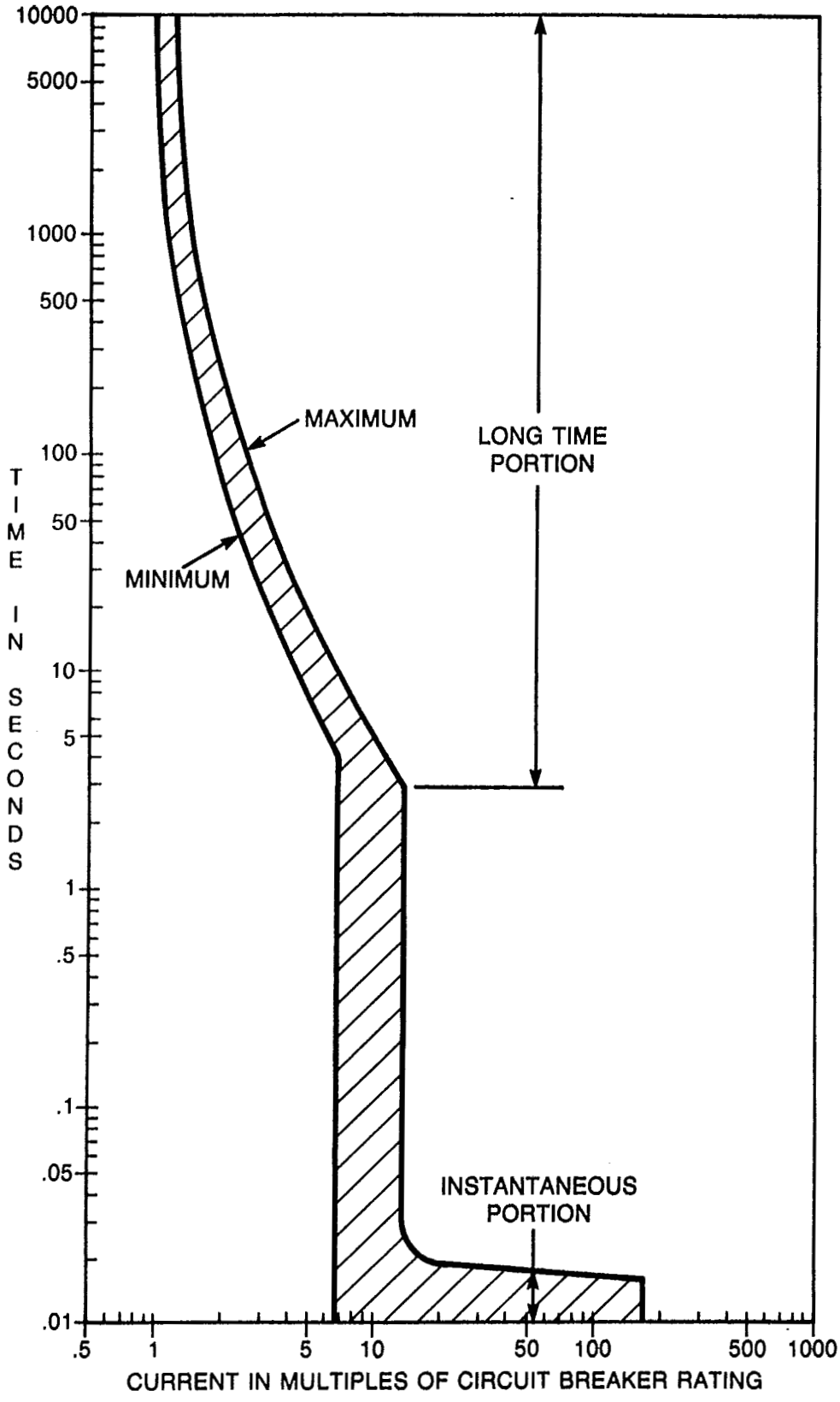

Figure 5-3
TYPICAL TIME-CURRENT CURVE FOR NON-ADJUSTABLE MOLDED CASE CIRCUIT BREAKERS (100A)

Copyright National Electrical Manufacturers Association
Provided by IHS under license with NEMA
No reproduction or networking permitted without license from IHS
Not for Resale

Example No. 1

Assume a 15 ampere breaker with an instantaneous trip range of 180 amperes to 220 amperes mounted in an enclosure in normal room temperature.

Q: When will the breaker trip with an overload of 75 amperes?
A: Since 75 amperes is 5 times (point 'A') the breaker rating (75 ÷ 15 = 5), the breaker will trip sometime between 2.5 seconds (point 'B') and 7 seconds (point 'C').

Example No. 2

Assume motor starting current is 75 amperes for 10 seconds.

Q: Will a 15 ampere breaker allow a 10 hp, 460 volts ac motor to get on the line without tripping on start-up?
A: Since 75 amperes motor-in-rush current is 5 times the breaker rating (75 ÷ 15 point 'A'), the breaker will trip between 2.5 seconds (point 'B') and 7 seconds (point 'C'). Therefore, the 15 amperes breaker will not allow the 10 hp motor to get on-line.

Example No. 3

Assume a 50 ampere breaker with an instantaneous trip range of 350 amperes to 500 amperes, mounted in an enclosure in normal room temperature.

Q: When will the breaker trip with an overload of 250 amperes?
A: Since 250 amperes is 5 times (point 'A'), the breaker rating (250 ÷ 50 point 'A'), the breaker will trip sometime between 2.5 seconds (point 'B') and 7 seconds (point 'C').

Q: Under a fault condition of limited value, for example, 2500 amperes, how fast will the circuit breaker trip?
A: Since the 2500 ampere fault current (point 'D') is beyond the instantaneous range of the breaker (500 amperes), the breaker, will trip instantaneously—under one cycle (point 'E').

5.4.4.3 PARTIALLY ADJUSTABLE

Circuit breakers with frame ratings 225 amps and higher generally have fixed long time but adjustable instantaneous settings. Except in the instantaneous range, the curve details are similar to the nonadjustable curve. A typical curve of a 400 amp, 2- and 3-pole, thermal-magnetic circuit breaker is shown in Figure 5-5. In the example, the instantaneous pick-up is adjustable from 5 to 10 times the continuous current rating.

5.4.4.4 FULLY ADJUSTABLE

Molded case circuit breakers with established short time ratings and equipped with solid-state trip units can be provided with a full range of adjustable time-current curve shaping characteristics. Example—curves are shown in Figure 5-6 for the phase current adjustments and in Figure 5-7 for the ground fault current tripping adjustments.

Since the solid-state trip units operate with current derived from current transformers and contain no thermally sensitive bimetals, the circuit breakers are basically insensitive to ambient conditions. Since they are equipped with solid-state components that have a recommended ambient range, the curves are generally applicable over a range of −20° to 55°C (−68° to 131°F).

Solid-state trip units may be equipped with either adjustable short time or adjustable instantaneous settings, or both, to suit application requirements. Trip units with only adjustable short time settings can be used to advantage in selectively coordinated distribution systems. Because of the reduced short time ratings—compared to the normally high interrupting ratings—fixed override trip values are provided when the adjustable instantaneous setting is omitted.

Ground fault time-current curves are generally shown separately from the phase current adjustments. Typical adjustments are shown in Figure 5-7. For services not exceeding 600 volts, the pick-up setting is limited to a maximum value of 1200 amperes in accordance with Section 230-95 of the *National Electrical Code.* Pick-up settings may be shown as a multiple of the frame rating, the continuous current rating, or in specific ampere settings, depending upon the manufacturer. Time delay settings are generally in steps to a maximum of 0.5 seconds. (See 5.4.5.)

When zone selective interlocking is provided, provisions are included to override the pre-set ground fault time delay for ground faults in the immediate zone of the breaker involved.

Copyright National Electrical Manufacturers Association
Provided by IHS under license with NEMA
No reproduction or networking permitted without license from IHS
Not for Resale

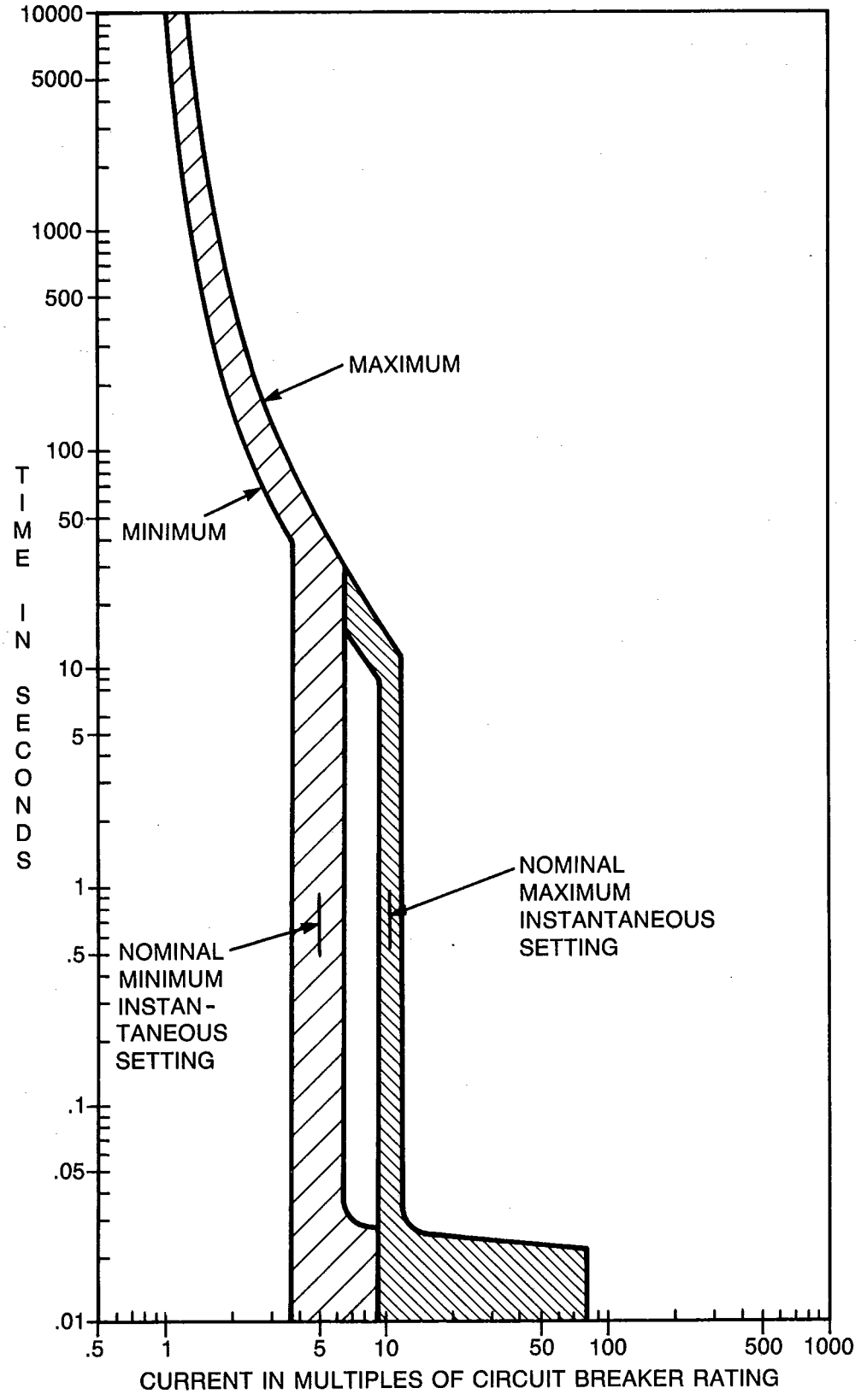

Figure 5-5
TYPICAL TIME-CURRENT CURVE FOR ADJUSTABLE INSTANTANEOUS MOLDED CASE CIRCUIT BREAKERS

Copyright National Electrical Manufacturers Association
Provided by IHS under license with NEMA
No reproduction or networking permitted without license from IHS
Not for Resale

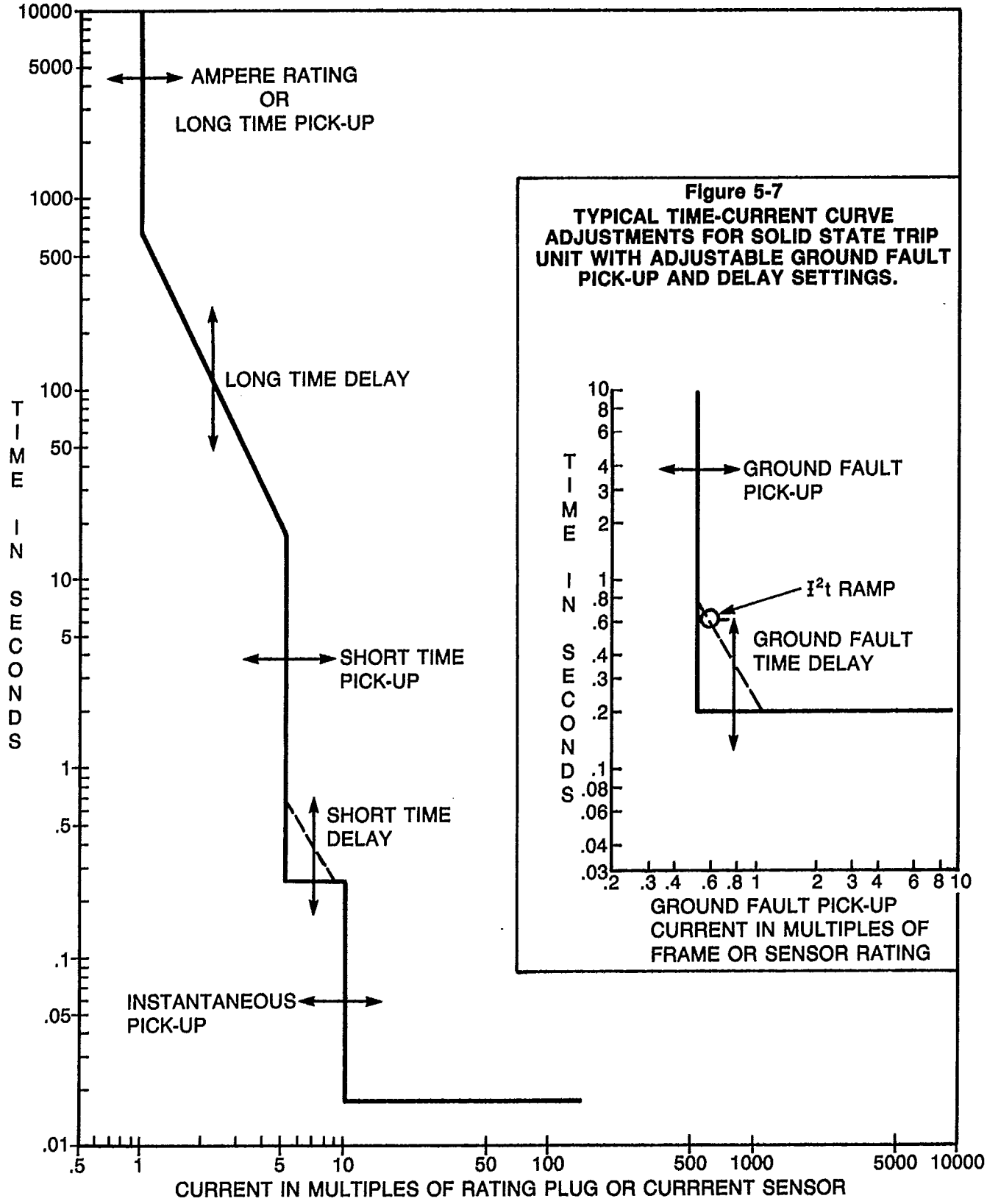

Figure 5-6
TYPICAL TIME-CURRENT CURVE ADJUSTMENTS FOR SOLID STATE TRIP UNIT WITH ADJUSTABLE PHASE CURRENT SETTINGS

Figure 5-7
TYPICAL TIME-CURRENT CURVE ADJUSTMENTS FOR SOLID STATE TRIP UNIT WITH ADJUSTABLE GROUND FAULT PICK-UP AND DELAY SETTINGS.

Copyright National Electrical Manufacturers Association
Provided by IHS under license with NEMA
No reproduction or networking permitted without license from IHS
Not for Resale

5.4.5 Selective Coordination

Selective coordination is the application of circuit protective devices in series in a manner that under fault conditions only the upstream device nearest to the fault will open to clear the circuit. This action enables the balance of the protective devices to remain closed, thus providing the user with the highest level of service continuity.

Time-current curves of molded case circuit breakers with adjustable time-current characteristics serve an important function in this system application.

Before any selectively coordinated distribution system can be developed, several systematic steps must be followed to ensure that the ultimate user's needs and desires are satisfied. Key development steps for the distribution, protection and coordination of any industrial or commercial power system will involve the preliminary considerations outlined under 5.1 plus the following:

1. The preliminary power distribution plan should be developed from the substation or service equipment through the utilization equipment areas.
2. The requirements for standby or emergency power supplies, including any automatic transfer equipment, should be determined.
3. A preliminary single-line wiring diagram should be developed identifying such major electrical components as: service and distribution equipment, transformers, large motor loads, lighting, busways, and cable routings, and so forth.
4. A preliminary short-circuit study should be conducted to determine required equipment interrupting ratings.
5. Detailed equipment selection and coordination studies should follow.

To assist the system designer, there are a number of technical publications that can be used. References that contain detailed information on the above include the following:

1. IEEE Std. 141
2. IEEE Std. 242
3. IEEE Std. 446

Molded case circuit breakers with solid-state trip units feature high interrupting ratings, short time withstand capabilities, and curve shaping adjustments that make them ideally suited for application in selectively coordinated systems.

The following is an example of selective coordinates using circuit breakers with solid state trip units:

Given

1. Single-line diagram with utility supply parameters as illustrated in Figure 5-8
2. Current-limiting fuse (A) of the type and rating recommended for the protection of the given transformer in accordance with Section 450-3 of the *National Electrical Code*
3. Feeder circuit breaker (F) rated 600 amperes
4. Downstream branch breaker (B), thermal-magnetic type, rated 100 amperes with time-current curve per Figure 5-3
5. Preliminary fault current study with values as indicated; for methods of calculation, refer to the IEEE Red Book or the manufacturer's literature, or both.

Required

1. Main circuit breaker (M) with rating and time-current adjustments required for selective coordination with the given boundary protective devices: "A" and "B".
2. Feeder circuit breaker (F) with rating and time; current adjustments required for selective coordination with the given boundary protective devices: "M" and "B".
3. Coordinated, integral ground fault protection on devices "M" and "F".

Solution

The three requirements above clearly define a need that can be satisfied with two circuit breakers equipped with solid-state trip units having integral ground fault protection. The interrupting ratings required are relatively low for today's modern circuit breakers, but the short time ratings are ideally suited for the given application.

The continuous current rating of the main circuit breaker (M) is selected as 1600 amperes. This circuit breaker may have a 100 percent application rating in accordance with Section 220-10(b)(exception) of the *National Electrical Code.* The rating will comply with Table 450-3(a)(2) of the *National Electrical Code* which permits continuous ratings to 250 percent of the transformer secondary (1203 amperes) where primary fuse protection is supplied with a maximum rating of 300 percent of the transformer primary rating (139 amperes).

The interrupting rating of the main circuit breaker (M) shall exceed 17.8 KA rms symmetrical at 480 volts (65 KA selected).

Copyright National Electrical Manufacturers Association
Provided by IHS under license with NEMA
No reproduction or networking permitted without license from IHS
Not for Resale

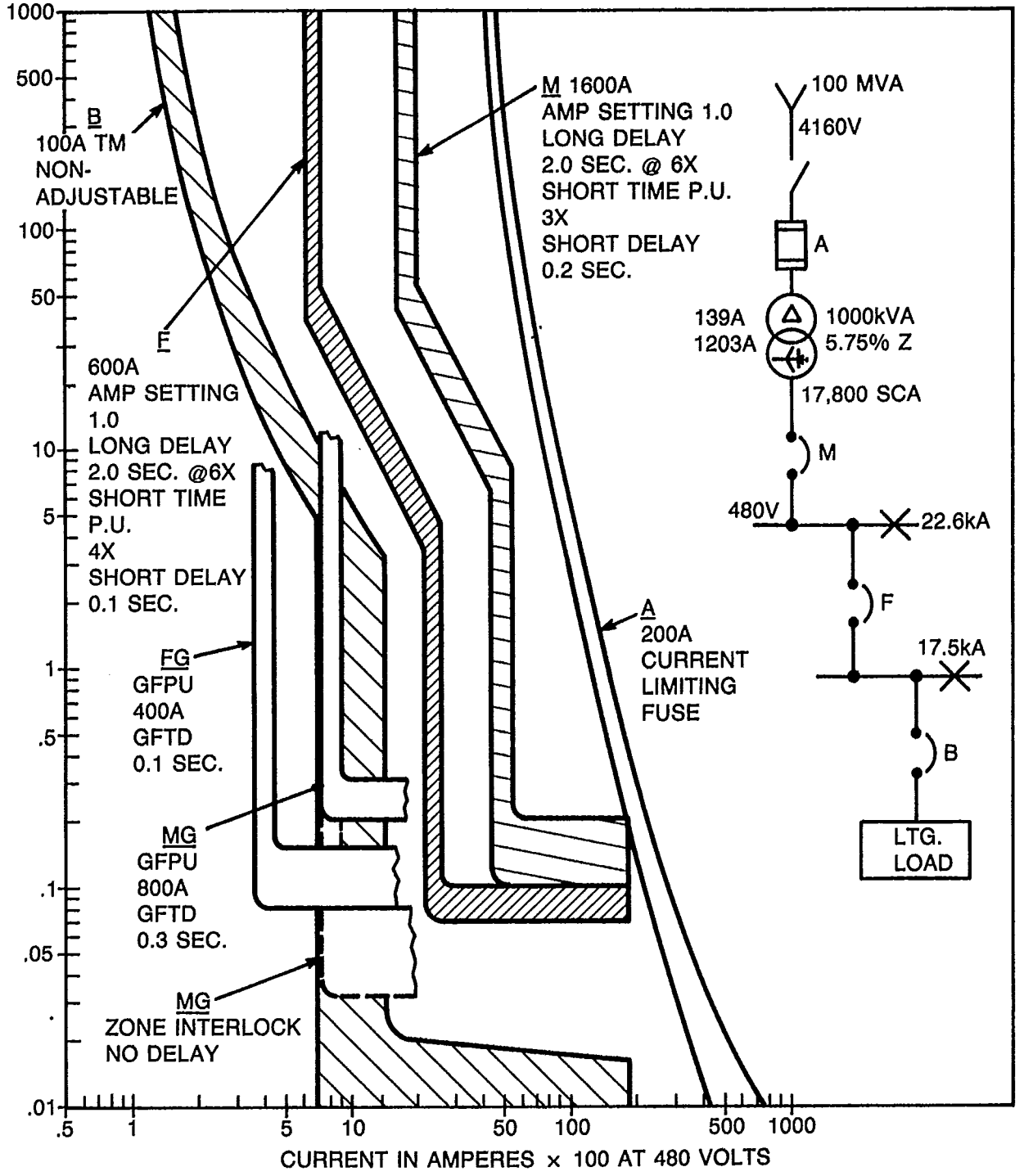

Figure 5-8
TYPICAL SYSTEM—SELECTIVELY COORDINATED

Copyright National Electrical Manufacturers Association
Provided by IHS under license with NEMA
No reproduction or networking permitted without license from IHS
Not for Resale

The interrupting rating of the feeder breaker (F) shall exceed 22.6 KA rms symmetrical at 480 volts; this includes 100 percent motor contribution (50 KA selected).

Molded case circuit breakers having the required features and ratings could have time-current curves similar to those illustrated in Figures 5-6 and 5-7. These types of circuit breakers have fixed override circuits with fixed instantaneous settings which are based on their short time ratings that are employed when the adjustable instantaneous settings are omitted for selective coordination.

Selected pick-up and time delay values for each circuit breaker are defined in Figure 5-8 under "M" and "F". With the various settings available and the boundary conditions given, alternate phase current selections could have been made but the choices shown are a good compromise.

Ground fault protection is required by Section 230-95 of the *National Electrical Code* for the main circuit breaker. It is not required by the *National Electrical Code* for the feeder circuit breaker, but it is recommended where maximum continuity of service is desired.

Separate ground fault settings for circuit breakers "M" and "F" are shown under curves "MG" and "FG". Ground fault application details and recommended settings are shown in NEMA Standards Publication PB 2.2.

The ground fault selections shown follow the general recommendations of these guidelines. Selective coordination is achieved for all faults between the main and feeder circuits. For ground faults on the branch circuit (B) greater than 400 amperes and less than 1400 amperes, selectivity will be lost because circuit breaker "F" will open ahead of circuit breaker "B". Complete selectivity can only be achieved in this system when separate ground fault protection is provided on device "B". This was not a requirement in this example.

The zone interlocking between the main breaker (M) and the feeder breaker (F) will greatly reduce the probable damage level if a ground fault occurs in the system between the main and feeder circuit breakers. This is illustrated by the change in trip time indicated for "MG" for a downstream fault (0.2 second time delay) and a zone fault (no delay, for example, 0.08 seconds). Tripping on the downstream feeder breaker ("FG") is restrained to the pre-set time delay value of 0.1 second to give device "B" a chance to clear downstream ground faults.

Conclusion

Selectively coordinated distribution systems can be effectively developed using molded case circuit breakers with solid-state trip units equipped with integral ground fault protection. Because circuit breakers have a wide range of ratings and features, the manufacturer should be consulted.

5.4.6 Series Application

In electrical distribution systems, molded case circuit breakers may be applied in series in either of two methods and fully comply with the requirements of the *National Electrical Code.*

Fully Rated Method

Each circuit breaker should be selected with an interrupting rating equal to the available fault current at its line side terminals. This is the conventional method of applying circuit breakers and fully complies with the requirements of Section 110-9 of the *National Electrical Code.*

Series—Combination Method

Two circuit breakers should be selected that have been "tested in series" and listed for the available fault current at the line side terminals of the upstream device. This is a recent applications concept that also meets the full intention of Section 110-9 of the *National Electrical Code.*

Proper care should be taken in designing systems with significant motor loads to ensure that the proposed application does not exceed the series rating due to motor fault current contributions.

Section 110-9 of the *National Electrical Code* defines the interrupting rating requirements for electrical installations as follows: "Equipment intended to break current at fault levels shall have an interrupting rating sufficient for the system voltage and the current which is available at the line terminals of the equipment."

Section 110-3(a)(1) of the *National Electrical Code* indicates that the suitability of equipment may be evidenced by listing or labeling.

To implement these two basic requirements in the *National Electrical Code*, Underwriters Laboratories Inc. established in UL 489 a test sequence and performance criteria for molded case circuit breakers connected in series. Listings of circuit breakers that have been tested by UL and which meet these requirements are published in the UL *Recognized Component Directory.*

Copyright National Electrical Manufacturers Association
Provided by IHS under license with NEMA
No reproduction or networking permitted without license from IHS
Not for Resale

In no case should a series combination of molded case circuit breakers be applied in a distribution system where the available fault current exceeds the marked interrupting rating of the upstream or line side circuit breaker. However, the rating of the downstream breaker in the combination may be exceeded if the combination has been tested at ratings equal to or greater than the available fault current at the point of application of the line side terminals of the upstream device.

The interrupting rating of the series combination is not permitted to be marked on the downstream circuit breaker. However, the end use equipment, such as a panelboard or other end use equipment in which the combination has been tested and listed, may be marked with the series tested interrupting rating. This is permitted under two conditions:

1. The upstream circuit breaker is installed in the panelboard as a main breaker; or
2. The panelboard is a main-lug-only type and is specifically marked to indicate the type and rating of the upstream listed series tested circuit breaker that must be applied with the panelboard.

To apply circuit breakers that have been series tested in a distribution system where the marked interrupting rating of the downstream device is exceeded. The following procedures should be observed:

1. The available fault current at the line side terminals of the upstream circuit breaker should be determined.
2. The circuit breaker selected as the upstream device should have an interrupting rating equal to or greater than the available fault current as determined in (1) above.
3. The "Series Tested" listed interrupting rating of the selected combination of circuit breakers should be verified by referring either to the UL *Recognized Component Directory* or the manufacturer's literature.

Note: All combinations of circuit breakers have not been tested and listed for series application. Only those ratings and combinations that can be verified, should be used.

4. During installation, confirmation of the correct application can be verified by referring to the listing marks or nameplates, or both, appearing in the end use equipment.

5.4.7 Capacitor Switching

General Purpose

Capacitors are used in low voltage distribution systems primarily to improve the overall power factor of the system. Requirements for capacitor applications are covered in Article 460 of the *National Electrical Code.*

Molded Case Circuit Breaker Ratings

Molded case circuit breakers should have voltage ratings adequate for the voltage of the capacitor system in which they are applied. The interrupting rating should be equal to or greater than the fault current available at the point of application. The continuous rating of the circuit breaker should be in excess of 135 percent of the maximum nameplate rating of the capacitor to be switched. Because of transient conditions which may occur during switching, manufacturers generally recommend values of 150 percent and above. Consult the manufacturer for specific recommendations.

5.4.8 Motor Loads

In selecting branch circuit protection for motor loads, it should be recognized that while the circuit conductors should be protected from overcurrents due to overloaded circuits, short-circuits, and high-level ground faults, the branch circuit protective device should be able to carry the starting current of the motor without opening the circuit.

When a molded case circuit breaker is used as a protective device for a motor load, it can be either an instantaneous trip or a combination inverse-time/instantaneous trip type.

Instantaneous only circuit breakers contain no time delay elements. Therefore, they are used only for short-circuit and high-level ground fault protection. The *National Electrical Code* recognizes this type of breaker but requires that it be used in a combination motor starter. The combination motor starter should have overload protection in each conductor. The instantaneous trips on these breakers are always adjustable.

The adjustable trip on these breakers should be set just above the starting current of the motor. This will afford the maximum short-circuit protection. One of the chief advantages of this type of breaker is that it provides short-circuit protection slightly above the instantaneous peak starting current of the motor.

Some motors have peak instantaneous starting characteristics higher than 13 times motor full load current (MFLC). Also some applications involving fast reversing, plugging, open transition, reduced voltage starting, or automatic supply transfer can cause very high peak starting currents. The motor and circuit breaker manufacturers should be consulted when applying breakers in this application.

Another advantage of instantaneous-only breakers is that they can be sized at 115 percent of motor full load current, the minimum allowed by the *National Electrical Code,* without creating tripping problems on motor starting. This often allows the use of a smaller frame size breaker.

Copyright National Electrical Manufacturers Association
Provided by IHS under license with NEMA
No reproduction or networking permitted without license from IHS
Not for Resale

An inverse time circuit breaker can be used to protect branch circuits feeding individual motors, groups of motors, or combinations of motors and other loads.

The *National Electrical Code* requirements for "Motor Branch-Circuit Short-Circuit and Ground-Fault Protection" are contained in Article 430 (Part D). These are maximum values for branch-circuit protection setting the limit of safe application. Where maximum protective device ratings are specified by the equipment manufacturer, they should not be exceeded.

Heating, Air Conditioning, and Refrigeration (HACR) Type Circuit Breakers

The *National Electrical Code* permits the use of an inverse time circuit breaker as the branch-circuit protective device in multi-motor and combination load installations, commonly involved in heating, air conditioning, and refrigeration equipment, provided the circuit breaker has been listed for this purpose.

Molded case circuit breakers meeting the requirements will be marked "Listed HACR Type" to indicate their suitability for this specific use. Manufacturers of listed heating, air conditioning, and refrigeration equipment wishing to have their products identified for use with such a circuit breaker can mark their products indicating suitability for use with a breaker identified as a HACR Type.

5.4.9 Nuclear Power Generating Station Equipment Qualifications

Class 1E is the safety classification of the electric equipment and systems that are essential to emergency reactor shutdown, containment isolation, reactor core cooling, and containment and reactor heat removal, or otherwise are essential in preventing significant release of radioactive material to the environment. (See IEEE 323.)

The IEEE standards that relate to the qualification of Class 1E Equipment for nuclear power generating stations that could involve molded case circuit breakers are:

Standard 323
Standard 344
Standard 649
Standard 650.

Any application of molded case circuit breakers requiring qualifications in line with these standards will be very special and should be referred to the manufacturer for recommendations.

5.5 Considerations for Specific Application Breakers

5.5.1 Current-Limiting

A general definition which includes a current-limiting circuit breaker has been established in Section 240-11 of the *National Electrical Code*. It is a device which, when interrupting currents in its current-limiting range, will reduce the current flow in the faulted circuit to a magnitude substantially less than that obtainable in the same circuit if the device were replaced with a solid conductor having comparable impedance.

This is a generalized definition and could be used to cover the three common current-limiting design concepts used with molded case circuit breakers, namely:

1. Molded case circuit breaker with integrally mounted current limiters
2. Molded case circuit breaker with close-coupled externally mounted current limiters
3. Molded case circuit breaker with electromechanical means for limiting fault currents without replaceable fuse elements.

For the purpose of this publication, categories 1 and 2 above cover molded case circuit breakers with current-limiting fuses unique to the product and not general purpose current-limiting fuses which may be used with other devices.

For any device to be considered as "current-limiting," it must substantially limit the peak let-through current (I_p) and thermal energy (I^2t). The I^2t must be less than the I^2t of a ½-cycle wave of the symmetrical prospective current.

The forces exerted on the conductors in a distribution system, or circuit protective device, are related to the square of the peak let-through current (I_p^2). This is a main factor in determining the mechanical strength of a circuit component, including the molded housing, circuit conductors, wiring terminations, switchboard, bus bracing, and so forth.

I^2t is a measure of the thermal let-through energy. This factor is directly related to the thermal capability of the system and its protective devices. It is used to determine minimum thermal conductor size, insulation limitations and the capabilities of welded or brazed connections to remain intact.

Copyright National Electrical Manufacturers Association
Provided by IHS under license with NEMA
No reproduction or networking permitted without license from IHS
Not for Resale

The selection of the proper current-limiting devices is not a simple matter. The manufacturers of current-limiting devices normally publish the I_p and I^2t let-through values of their circuit protective devices. However, care must be taken to choose devices, not only by their individual characteristics, but by their characteristics as influenced by the system within which they will be installed.

All current-limiting devices function as limiters within finite ranges of current values. Circuit impedance and other circuit parameters change during fault interruption due to the dynamic characteristics of downstream devices. Therefore, it is possible that the inherent current-limiting of a downstream current protective device could prevent a fault current from reaching the minimum current-limiting level of an upstream current-limiting device while still surpassing its own maximum interrupting rating. In a situation such as this, protection does not exist for the downstream device.

Therefore, because the circuit breaker manufacturer normally conducts actual system tests of these devices, the manufacturer's recommendations should be strictly followed.

5.5.1.1 Integrally Fused Circuit Breakers

These devices employ current limiters which are similar to conventional current-limiting fuses but are designed, both physically and with time/current operating characteristics, for specific performance with the related circuit breaker.

Circuit breakers incorporating these limiters also include overload and low level fault protection, thus combining the required protection elements for application on distribution circuits with higher available fault currents. These protective actions are coordinated so that unless a severe fault occurs, the current limiter is unaffected and its replacement is not required. Historical data indicate that most system faults occur in the low fault level range.

Current limiters are generally located within the molded case circuit breaker frame and separated from the sealed trip unit of the circuit breaker for easy access. An interlock is provided which ensures the opening of the circuit breaker contacts before the limiter cover can be removed. The possibility of single phasing is eliminated by designs which ensure simultaneous opening of all circuit breaker poles.

Additionally, many circuit breakers are equipped with a mechanical interlock which prohibits the circuit breaker from closing with a missing current limiter.

The continuous ampere rating of the circuit breaker is selected in the same manner as for a conventional molded case circuit breaker. Manufacturers generally provide a variety of current limiter ratings with time/current characteristics for application with a variety of downstream devices. The selection of the individual limiters should be made in strict accordance with the manufacturer's published literature to achieve the desired level of circuit protection.

Molded case circuit breakers with close-coupled, externally-mounted current limiters are applied in the same manner as those with integrally-mounted limiters. If the limiter is properly applied, anti-single phasing is ensured by the coordinated tripping characteristics between the close-coupled limiter and the molded case circuit breakers. Whenever the limiter operates, the let-through energy will be sufficient to trip the breaker.

5.5.1.2 Current-limiting Circuit Breakers

A current-limiting circuit breaker is a circuit breaker that does not employ a fusible element and that, when operating within its current-limiting range, limits the let-through I^2t to a value less than the I^2t of a ½ cycle wave of the symmetrical prospective current.

Current-limiting circuit breakers have been developed using a variety of mechanical concepts to limit the let-through current to satisfy the fundamental definition of current-limiting without the use of the fuses. These methods include both single and double break contact arrangements with repulsion loops or electro-magnetic, or both, assist designs as well as commutation systems.

These current-limiting breakers can be reset and service restored in the same manner as conventional circuit breakers even after clearing maximum level fault currents.

For the individual breakers when tested alone, manufacturers of current-limiting circuit breakers publish peak let-through current (I_p) and energy (I^2t) curves. In addition, extensive testing has also been done with downstream circuit breakers of a variety of types and ratings. Similar I_p and I^2t curves with these results have also been published. Typical curves of these types are illustrated in Figures 5-9 and 5-10.

Since application ratings and details vary between suppliers, consult the manufacturer for specific application recommendations.

Copyright National Electrical Manufacturers Association
Provided by IHS under license with NEMA
No reproduction or networking permitted without license from IHS
Not for Resale

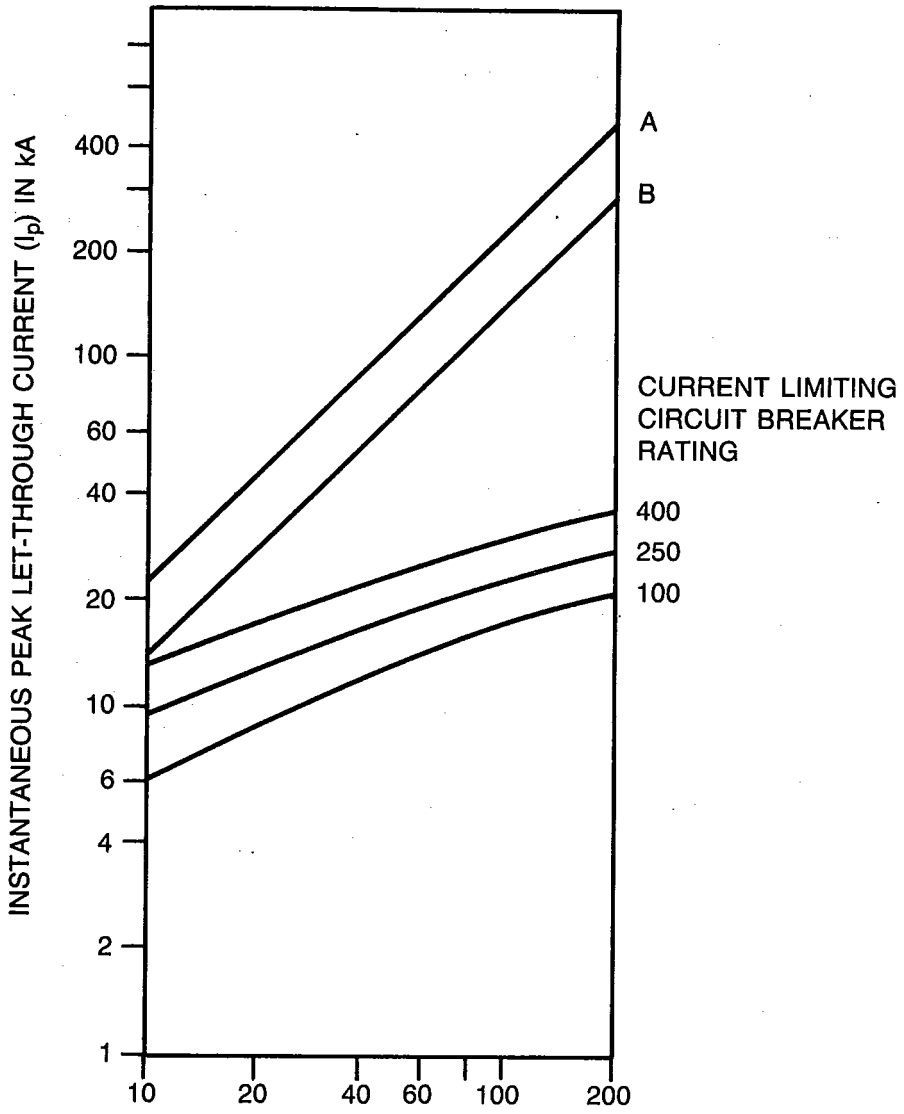

A = MAXIMUM ASYMMETRICAL PEAK AT 15% POWER FACTOR
(2.3 × RMS SYMMETRICAL)

B = MAXIMUM SYMMETRICAL PEAK (1.414 × RMS SYMMETRICAL)

Figure 5-9
TYPICAL CURRENT LIMITING CIRCUIT BREAKERS

Copyright National Electrical Manufacturers Association
Provided by IHS under license with NEMA
No reproduction or networking permitted without license from IHS
Not for Resale

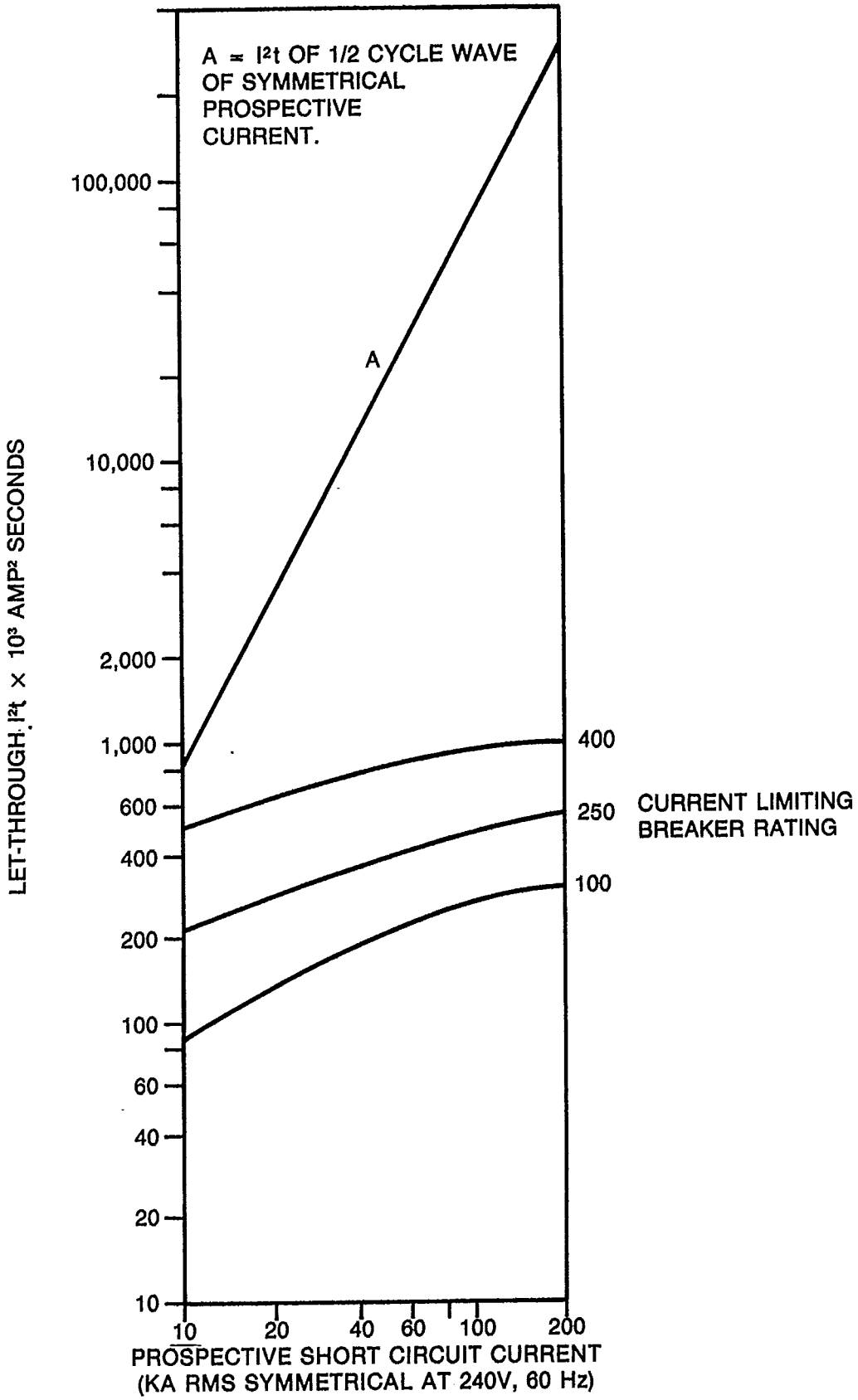

Figure 5-10
TYPICAL CURRENT LIMITING CIRCUIT BREAKERS

Copyright National Electrical Manufacturers Association
Provided by IHS under license with NEMA
No reproduction or networking permitted without license from IHS

Not for Resale

5.5.2 Ground Fault Protection

The subject of ground fault protection is extensive but, for application simplicity, should be broadly separated into two major categories:

1. Ground fault protection for equipment
2. Ground fault protection for personnel.

These two categories are covered by separate design and performance standards as well as separate sections of the *National Electrical Code.* Separate and distinctly different product types are available for each application category.

Personnel protection involves the protection of human life and, as such, requires sensitivity levels in the low milliampere current range. Devices which provide this protection are called Ground Fault Circuit Interrupters (GFCI or GFI).

Ground fault protection for equipment (commonly referred to as GFP) is safety oriented, but from a different viewpoint. The protection of low voltage (600 volts) equipment allows sensitivity levels in the ampere range but also considers other user considerations, such as continuity of service, which can also be a very important safety factor.

5.5.2.1 Ground Fault Protection for Equipment

5.5.2.1.1 GENERAL

This subject has been well documented in recent years. Two publications worthy of review are as follows:

1. NEMA Standard Publication PB 2.2
2. IEEE Std. 242. Chapter 8 covers ground fault protection.

Any document on this subject must necessarily stress the following factors:

1. The need for ground fault protection, for example, arcing ground faults
2. Applicable performance standards and Code requirements
3. Methods of detecting ground faults
4. Types and arrangements of distribution systems with recommended detection; schemes for each
5. Coordination examples.

The referenced documents thoroughly cover each of these topics. For simplicity, this document's discussion of Ground Fault Protection of Equipment will be limited to 600 volts and to the most common type of system covered by the *National Electrical Code*, for example, the grounded wye.

5.5.2.1.2 CODE REQUIREMENTS

The *National Electrical Code*, under Section 230-95, requires that ground fault protection of equipment be provided when all four of the following conditions exist:

1. Solidly grounded wye system
2. Service entrance
3. More than 150 volts to ground but not exceeding 600 volts phase-to-phase
4. Service disconnect rated 1000 amperes or more.

Two exceptions related to safety are allowed:

1. In a continuous industrial process where a nonorderly shutdown will introduce additional or increased hazards
2. Fire pump installations.

There are several other items in this *Code* section that should be reviewed in detail by the reader. These non-mandatory items, in fine print notes, should be considered:

1. Ground Fault Protection for Equipment (GFP) may be desirable for disconnects rated less than 1000 amperes.
2. GFP, as required in this *Code* section, does not provide any protection for ground faults on the line side of the service disconnect means. It serves only to limit damage on the load side.
3. The addition of GFP on service equipment will necessitate reviewing the overall wiring system for proper selective overcurrent protective coordination. Additional downstream GFP installations may be required where continuity of service is necessary.
4. When GFP is supplied on the service disconnect and an interconnection is made with another supply system, other devices or means may be needed to assure proper ground fault sensing.

Any time that GFP is supplied for services rated 600 volts or less, the maximum allowed setting is 1200 amperes. The time-current curve may be designed to allow for a one second delay for ground faults equal to or greater than 3000 amperes.

Copyright National Electrical Manufacturers Association
Provided by IHS under license with NEMA
No reproduction or networking permitted without license from IHS
Not for Resale

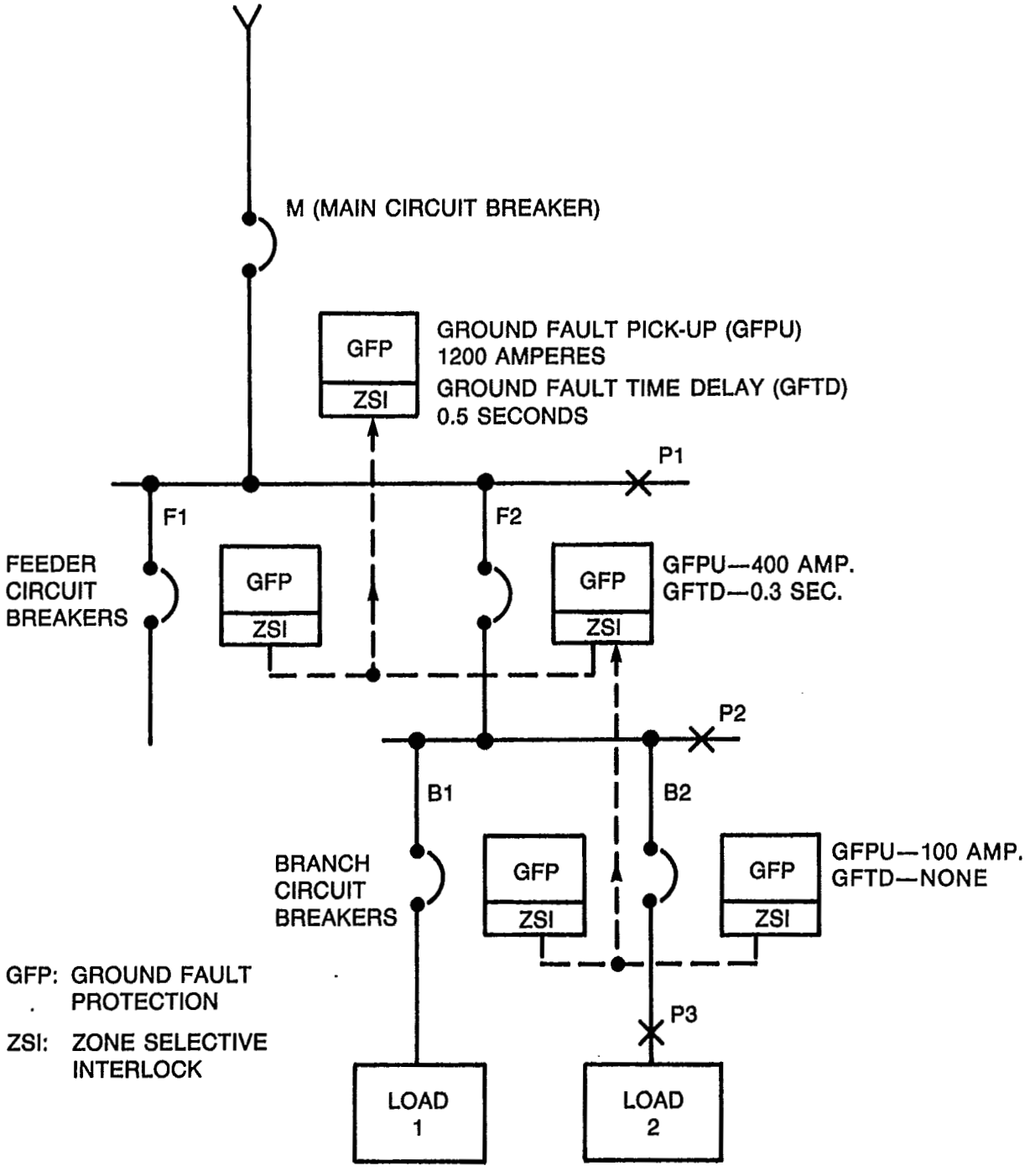

Figure 5-11
TYPICAL MULTILEVEL GROUND FAULT PROTECTION

Copyright National Electrical Manufacturers Association
Provided by IHS under license with NEMA
No reproduction or networking permitted without license from IHS
Not for Resale

Any time that GFP is provided in line with the requirements of Section 230-95 of the *National Electrical Code*, it must be performance tested when first installed. The test shall be conducted with approved instructions provided with the equipment. Written records must be made available to the authority having jurisdiction.

In addition to the basic service entrance requirements as outlined above, the *National Electrical Code* defines under Section 517-14 for health care facilities, the following additional requirements:

1. Where GFP is required on main service disconnects per Section 230-95 of the *National Electrical Code*, it should also be provided in the next level of feeders downstream toward the load
2. When provided on these two levels, a separation in time of 6 cycles (0.1 seconds) should be provided between the service and feeder ground fault tripping bands. Operating time of the disconnect devices shall be considered to achieve 100 percent selectivity.

5.5.2.1.3 SOLID-STATE TRIP UNITS

Molded case circuit breakers have been developed with integral ground fault protection systems using solid-state trip units to enable a user to comply with the requirements of the *National Electrical Code*. Where integral GFP is not available, as in thermal-magnetic circuit breakers, normally available shunt trip devices can be applied with separate GFP systems to accomplish the same end results.

5.5.2.1.4 ZONE SELECTIVE INTERLOCKING

When multiple levels of GFP are provided in a distribution system to provide continuity of service for downstream locations, selective coordination on ground fault is ordinarily obtained by adjusting the current pick-up or, more importantly, the time delay settings of the upstream and downstream devices. This will ensure that the device nearest to the ground fault always operates to clear the fault first.

In addition to the required time-current curve shaping characteristics supplied with available GFP systems, manufacturers have developed zone selective interlocking circuitry to limit system damage for faults that occur upstream. See a typical example illustrated in Figure 5-11.

In Figure 5-11, GFP has been provided to ensure maximum service continuity on three levels, for example, main, feeders and branch circuits. To achieve selective ground fault coordination, pick-up and time delay settings have been selected as illustrated.

Each successively upstream device has been set at a higher time delay value. This ensures, for example, that circuit breaker "B2" will trip first for a fault at "P3" and devices "F2" and "M" will operate only as back-up devices. This requires increasingly higher time values for each upstream device to ensure that false tripping does not occur and maximum continuity of service is maintained. Should a ground fault occur at point "P1" instead, the main circuit breaker "M" could not operate in less than 0.5 second for a fault in its zone. Thus, more damage could be prevented if a faster trip time was available.

The use of zone selective interlocking overcomes this application difficulty and greatly reduces the amount of damage that could otherwise occur for an upstream fault such as at points "P2" or "P1". Zone selective interlocking operates in this manner.

1. Each GFP device in a zone interlock system must be provided with zone interlocking circuitry.
2. Each GFP device is set with appropriate time-current settings to achieve ground fault selectivity as typically illustrated in Figure 5-11.
3. Each level of GFP device is interconnected to the next level GFP device closer to the power source.
4. Each GFP device will operate with "no intentional time delay" for a ground fault within its immediate zone regardless of its preset time delay setting. This will enable the protective device to clear the fault in its zone in the fastest time possible, thus limiting the maximum damage level.
5. For any downstream fault, in the next lower zone, the protective device first sensing the fault will transmit a restraining signal to all upstream devices causing them to respond to their preset time delay settings. A typical time-current adjustment curve is shown in Figure 5-7 with a typical coordination example shown in Figure 5-11.

5.5.2.1.5 SELECTION GUIDELINES

Manufacturers have developed a wide range of molded case circuit breakers with a variety of features, settings and configurations of time-current curves to satisfy the application requirements of the *National Electrical Code* or specific system designer or both. Consult the manufacturer for specific product details. In general, when selecting or applying

Copyright National Electrical Manufacturers Association
Provided by IHS under license with NEMA
No reproduction or networking permitted without license from IHS
Not for Resale

molded case circuit breakers, or both, the following steps relating to ground fault protection of equipment must be considered:

1. Type of system involved, for example:
   grounded wye; or
   other.
2. Number of conductors, for example:
   3 ph., 3 wire—no phase to neutral loads; or
   3 ph., 4 wire—with phase to neutral loads.
3. Type of distribution system involved, for example:
   Simple radial system—
      single supply source; or
      single ground.
   Complex system—
      multiple supply sources; or
      single or multiple ground points.
4. Method of ground fault sensing employed, for example:
   Outgoing circuits, vectorial summation—
      residual;
      zero sequence; or
      core balance.
   Ground return—
      sensor on grounding electrode; or
      differential scheme.

Note: This is an important decision because the number, size, and shape of the sensing transformers are involved.

5. Levels of protection, for example:
   single; or
   multiple—
      with zone interlocking
      without zone interlocking.
6. Time-current characteristics; for example:
   Pick-up and time delay settings available;
   Type time-current curve—
      flat response;
      inverse; or
      adjustable.
7. Optional features, for example:
   field test provisions—
      integral; or
      separate.
   ground fault alarms
      integral; or
      remote.

5.5.2.2 Ground Fault Protection for Personnel (Circuit Breaker Type GFCI)

5.5.2.2.1 General Description

Circuit breaker type Ground Fault Circuit Interrupters (GFCI's) are standard inverse/time circuit breakers that also contain a differential current circuit that senses and initiates a tripping action on low-level ground fault conditions. These devices operate to protect personnel from ground fault currents 6 milliamps and greater. Circuit breaker GFCI's are normally used in load centers and panelboards to protect branch circuits in residential, commercial, and industrial applications.

The *National Electrical Code* requires GFCI protection in many places. These requirements can generally be met by the use of circuit breaker type ground fault circuit interrupters.

See NEMA Standards Publication 280 for additional information.

Copyright National Electrical Manufacturers Association
Provided by IHS under license with NEMA
No reproduction or networking permitted without license from IHS
Not for Resale

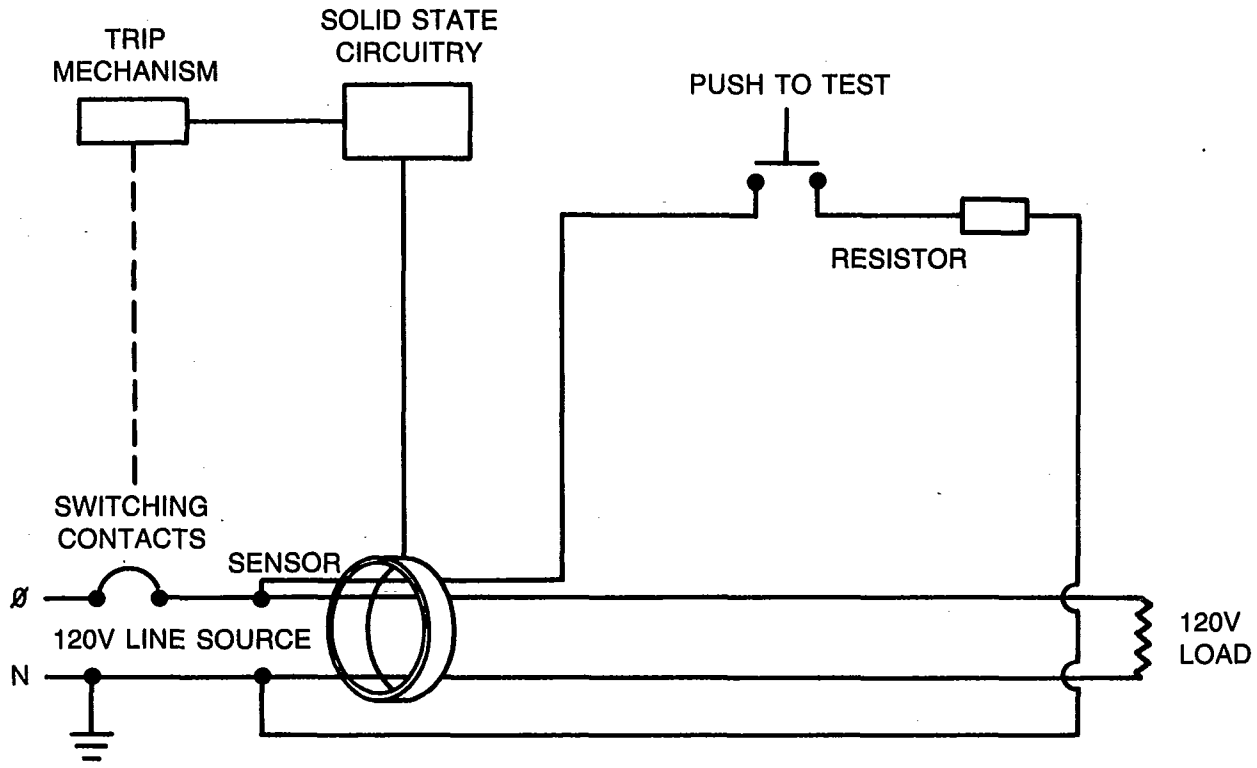

Figure 5-12
TYPICAL GROUND FAULT CIRCUIT INTERRUPTER
SCHEMATIC DIAGRAM

Copyright National Electrical Manufacturers Association
Provided by IHS under license with NEMA
No reproduction or networking permitted without license from IHS
Not for Resale

5.5.2.2.2 AVAILABLE RATINGS

Circuit breaker type GFCI's are normally rated 15, 20, 25, or 30 amperes, 120 volts ac, single-pole or 120/240 volts ac, two-pole. Application requirements are generally the same as for standard molded case circuit breakers. These devices are listed as Class "A" ground fault circuit interrupters and are required to operate at ground fault currents of 6 milliamps and greater.

5.5.2.2.3 PRINCIPLE OF OPERATION

In addition to providing personnel ground fault protection, a standard circuit breaker type ground fault circuit interrupter operates the same as any standard, inverse time circuit breaker providing circuit protection against overloads and high-level fault conditions. The ground fault sensing portion of the device responds only to ground faults which trigger the differential portion of the circuit. A typical schematic diagram is illustrated in Figure 5-12.

All GFCI's are provided with a push button actuated test circuit which simulates a low-level ground fault to check the operating integrity of the device. Tests should be conducted monthly and a test record should be maintained.

For more detailed information on GFCI's, see NEMA Standards Publication 280.

5.5.3 Molded Case Switches

Molded case switches are used where compact high capacity switches are needed. The use of a circuit breaker design with its small operating mechanism and reduced size throughout makes a very compact switch possible. They contain circuit breaker arc interrupting and mechanism parts and have the ability to manually make and break motor locked rotor currents. They are assigned specific withstand ratings and are intended primarily for use as a disconnect device.

Molded case switches may open automatically when subjected to fault levels above their withstand ratings.

Short-circuit and overload protection on systems using molded case switches must be provided by an appropriate overcurrent device.

Copyright National Electrical Manufacturers Association
Provided by IHS under license with NEMA
No reproduction or networking permitted without license from IHS
Not for Resale

Section 6

STANDARDS FOR MOLDED CASE CIRCUIT BREAKERS

A standard generally defines a product with reference to construction, dimensions, tolerances, safety, operating characteristics, performance, quality, rating, testing, and the service for which designed. There are several standards for molded case circuit breakers, and it should be noted that conformance with one standard does not necessarily imply conformance with other standards. Consult the manufacturer.

6.1 UNITED STATES STANDARDS

6.1.1 NEMA Standards Publication AB 1

This publication includes standards for ratings, tests and performance, manufacturing, markings and warning labels, applications for breakers and enclosures, and accessories for breakers.

These standards are designed to eliminate misunderstandings between the manufacturer and the purchaser and to assist the purchaser in selecting the proper circuit breaker for specific needs.

6.1.2 NEMA Standards Publication AB 2

This publication outlines a program of field testing and preventive maintenance for molded case circuit breakers.

6.1.3 Underwriters Laboratories Inc. UL 489

This standard for safety includes requirements for construction, performance, ratings, and markings for circuit breakers, circuit breaker accessories, and circuit breaker enclosures.

These requirements are designed with respect to hazards affecting life and property and are revised as necessary.

6.1.4 Underwriters Laboratories Inc. UL 943

This standard for safety includes requirements for construction, performance, ratings, and markings for Ground Fault Circuit Interrupters (including circuit breakers) intended for use on alternating current circuits wherein one of the wires is grounded in accordance with the *National Electrical Code*.

6.1.5 NFPA 70

The *National Electrical Code* contains provisions for the practical safeguarding of persons and property from hazards arising from the use of electricity.

Compliance with the *National Electrical Code* (and proper maintenance) will result in an installation essentially free from hazard, but not necessarily efficient, convenient, or adequate for good service or future expansion of electrical use.

Although the *National Electrical Code* is not mandatory, it is intended to be suitable for mandatory applications by governmental bodies exercising legal jurisdiction over electrical installations and for use by insurance inspectors.

The *National Electrical Code* is sponsored by the National Fire Protection Association and is revised every three years.

6.1.6 NFPA 70B

The purpose of this recommended practice is to provide guidelines that will help to reduce hazard to life and property that can result from failure or malfunction of industrial-type electrical systems and equipment. This practice explains the functions, requirements, and economic considerations that can be used to establish an effective Electrical Preventive Maintenance (EPM) program.

6.1.7 NFPA 70E

This standard addresses those electrical safety requirements for employee workplaces that are necessary for the practical safeguarding of employees in their pursuit of gainful employment.

Copyright National Electrical Manufacturers Association
Provided by IHS under license with NEMA
No reproduction or networking permitted without license from IHS
Not for Resale

6.1.8 Federal Specification W-C-375 B/GEN

This specification is for the use of all Federal agencies and covers molded case circuit breakers for service entrance, feeder, meter service, or branch circuit protection and rated at not more than 4,000 amperes, 600 volts ac, 60 hz.

Generally, circuit breakers conforming to the requirements of UL 489 are considered qualified for inclusion on the Federal agencies qualified product list.

6.1.9 IEEE Publication 323

This document describes the basic requirements for qualifying Class 1E equipment and interfaces that are to be used in nuclear power generating stations. The requirements presented include the principles, procedures, and methods of qualification. These qualification requirements, when met, will confirm the adequacy of the equipment design under normal, abnormal, design basis event, post design basis event, and containment test conditions for the performance of Class 1E functions.

6.2 OTHER APPLICABLE CODES AND STANDARDS

Most cities and states in the U.S. have adopted some type of electrical code. These codes are usually a specific edition of the *National Electrical Code* with or without modification. For specifics, the local municipality should be contacted.

6.3 INTERNATIONAL STANDARDS

Some of the more important standards pertaining to molded case circuit breakers are:

6.3.1 IEC 157-1

6.3.2 IEC 157-2 (Under development)

NOTE: IEC (International Electrotechnical Commission) is the world organization for establishing international electrical and electronic standards for the purpose of international unification.

6.4 NATIONAL STANDARDS OF OTHER COUNTRIES

The following is a partial listing of other national standards applicable to circuit breakers:

6.4.1 Canadian Standards Association (CSA)

CSA C22.2 -5

6.4.2 British Standard 3871—Parts 1 & 2

6.4.3 German Standard—VDE 0660 Part 1

6.4.4 Standard Association of Australia (SAA)

AS 2184
AS 3111

For more specific information, consult the manufacturer.

Copyright National Electrical Manufacturers Association
Provided by IHS under license with NEMA
No reproduction or networking permitted without license from IHS
Not for Resale

Section 7

MAINTENANCE AND FIELD TESTING

7.1 Normal Maintenance

WARNING: THERE IS A HAZARD OF ELECTRICAL SHOCK OR BURN WHENEVER WORKING IN OR AROUND ELECTRICAL EQUIPMENT. TURN OFF POWER SUPPLYING THE EQUIPMENT *BEFORE* WORKING INSIDE.

As in any electrical system, it is essential that electrical connections be made properly to prevent overheating. Thus, terminal connections should be checked for discoloration or arcing. Carbon deposits and pitting damage should be cleaned from termination contact surfaces. Since aluminum lugs are usually plated, they should not be cleaned with abrasives.

7.2 FIELD TESTING

From the performance requirements specified in Appendix B, it can be seen that molded case circuit breakers undergo extensive production testing and calibration at the manufacturer's plant. An unbroken factory seal assures that the breaker has not been subjected to alteration or tampering and that the breaker is expected to perform according to UL requirements.

However, reliability after installation also depends upon environment and maintenance. Where concern of breaker performance is justified because of poor environment, insufficient maintenance, or repeated high-current interruptions field testing can be accomplished in accordance with NEMA Standards Publication AB 2.

7.3 INSPECTION FOR DAMAGE

After a molded case circuit breaker has tripped and prior to restoring service, a visual inspection should be made for evidence of damages such as carbonization, cracked housing, material discoloration, and metal splashings. Any of the conditions may warrant field testing to determine continued serviceability of the breaker. (See 7.2.)

Copyright National Electrical Manufacturers Association
Provided by IHS under license with NEMA
No reproduction or networking permitted without license from IHS
Not for Resale

Appendix A

ABBREVIATIONS, DEFINITIONS, AND SYMBOLS

(This Appendix Approved as NEMA Standard 11-15-84)

A	Amperes
ac	Alternating current
AWG	American wire gage
C	Celsius
CO	Making operation followed immediately by a breaking operation, circuit breaker
dc	Direct current
E	Voltage
F	Fahrenheit
Hz	Frequency in Cycles per second—Hertz
I	Current
▌	Closed position (Marking)
I_e	Rated operational current
I_p	Peak current
I^2t	Amperes squared seconds
I_{sc}	Rated short-circuit breaking capacity
I_n	Rated uninterrupted current
I_{wc}	Rated withstand current
L	Inductance—Henrys
MCM	Thousand circular mils
M	Meter
M_A	Ratio of Asymmetrical to Symmetrical Current (3-phase)
M_M	Ratio of Asymmetrical to Symmetrical Current (1-phase)
mm	Millimeter
ms	Millisecond
N	Neutral
O	Breaking operation, circuit breaker
○	Open position (Marking)
R	Resistance—OHMS, in general
R_1	OHMS, cold
R_2	Resistance—OHMS, hot
RH	Rubber covered conductor, heat resistant, rated 75 °C
rms	Root mean square
SWD	Switching duty
T	Tripping time or time
t	Time interval
T_1	Temperature—Celcuis degrees, cold
T_2	Temperature—Celcuis degrees, hot
TC	Thermocouple
THW	Thermoplastic covered conductor, moisture and heat resistant, rated 75 °C
TW	Thermoplastic covered conductor, moisture resistant, rated 60 °C
U_e	Rated operational voltage
U_i	Rated insulated voltage
V	Voltage
Z	Impedance
ϕ	Phase
ϕ	Angle between voltage vector and current vector

Copyright National Electrical Manufacturers Association
Provided by IHS under license with NEMA
No reproduction or networking permitted without license from IHS
Not for Resale

Definitions

Accessories are devices which perform a secondary or minor duty as an adjunct or refinement to the primary or major duty of a circuit breaker.

An Adjustable Instantaneous Release (Trip) is that part of an overcurrent trip element which contains a means that can be adjusted to trip a breaker instantaneously at various values of current within a predetermined range of currents.

An Air Circuit Breaker is one in which the interruption occurs in air.

An Alarm Switch (Switching Device) is an auxiliary switch that operates to open or close a circuit upon the automatic opening of the circuit breaker with which it is associated.

An Ambient-Compensated Circuit Breaker is one in which means are provided for partially or completely neutralizing the effect of ambient temperature upon the tripping characteristics

The Ambient Temperature is the average temperature of the surrounding medium that comes in contact with the breaker or switch. For an enclosed device, it is the average temperature of the medium outside the enclosure.

An Auxilary Switch is a switch which is mechanically operated by the main device for signaling, interlocking, or other purposes.

NOTE: Auxiliary switch contacts may be designated as "a" or "b" as indicated below, but other contact arrangements may be used.

"a" contacts—open when the breaker or switch contacts are open and closed when the circuit breaker contacts are closed.

"b" contacts—closed when the breaker or switch contacts are open and open when the circuit breaker contacts are closed.

(This note approved as Authorized Engineering Information 11-15-1984.)

A Calibration Setting is the adjustment of the release mechanism of a circuit breaker to make the breaker perform in accordance with its prescribed characteristics.

A Calibration Test is one which is made at a selected percentage or multiple of the marked current rating of the circuit breaker to verify the tripping characteristics of the circuit breaker.

A Circuit Breaker is a device designed to open and close a circuit by nonautomatic means, and to open the circuit automatically on a predetermined overcurrent, without injury to itself when properly applied within its rating.

A Circuit Breaker Enclosure is an enclosure intended to house no more than one circuit breaker pole per supply conductor.

The Cross-Over Current of a Fused Circuit Breaker is the current at which the function of the fuse coincides with the operation of the trip mechanism of the circuit breaker, for example, where the fuse clearing time curve crosses the circuit breaker trip characteristic curve.

A Current-Limiting Circuit Breaker is a circuit breaker that does not employ a fusible element and that when operating within its current-limiting range, limits the let-through I^2t to a value less than the I^2t of a ½ cycle wave of the symmetrical prospective current.

A Current-Limiting Fused Circuit Breaker is a circuit breaker in combination with integral current-limiting fuses which, when it interrupts a current within its current-limiting range, purposely introduces an impedance to reduce the current magnitude and duration. The values of peak let-through current and I^2t characteristic are used as measures of the current-limiting ability of the combination device.

Copyright National Electrical Manufacturers Association
Provided by IHS under license with NEMA
No reproduction or networking permitted without license from IHS
Not for Resale

Dielectric Withstand Voltage Tests are tests made to determine the ability of the insulating materials and spacings used to withstand overvoltages without flashover or breakdown under specified conditions.

A Drawout-Mounted Circuit Breaker is an assembly of a circuit breaker together with a supporting structure so constructed that the breaker is supported and can be moved to either the main circuit connected or disconnected position without the necessity of removing connections or mounting supports.

The structure includes both self-supporting circuit terminals and an interlocking means which permits movement of the breaker between the main circuit connected and disconnected positions only when the breaker contacts are in the open position.

An Electrical Operator is an electrical controlling device which is used to open or close, or both, a breaker or switch and reset a circuit breaker.

An Endurance Test is one which is made to determine compliance with a specified number of mechanical and electrical operations.

An Enclosure is a surrounding case constructed to provide a degree of protection to personnel against incidental contact with the enclosed equipment and to provide a degree of protection against specified environmental conditions.

A Fixed Instantaneous Release (Trip) is that part of an overcurrent release element which contains a nonadjustable means that is set to trip a breaker instantaneously at or above a predetermined value of current.

A Frame is an assembly consisting of all parts of a circuit breaker except an interchangeable trip unit.

A Frame Size applies to a group of molded case circuit breakers which are physically interchangeable with each other. Frame size is expressed in amperes and corresponds to the largest ampere rating available in the group.

Groups may or may not be physically interchangeable with each other whether furnished by one or various manufacturers.

A Front-Connected Circuit Breaker is one in which the terminals for connecting or disconnecting conductors are accessible from the front of the breaker.

A Ground Fault Circuit Breaker is a circuit breaker which performs all normal circuit breaker functions and also trips when a fault current to ground exceeds some predetermined value.

NOTE: The ground fault current sensing means may or may not be integral with the circuit breaker.
(This note approved as Authorized Engineering Information 11-15-1984.)

A Handle Lock is a device which provides for a positive means of retaining the breaker (or switch) handle in a desired position with or without means for locking or sealing.

An Ignition-Protected Circuit Breaker is a circuit breaker designed and constructed so that it will not ignite an explosive atmosphere surrounding the device under normal operating conditions.

An Integrally-Fused Circuit Breaker is one in which coordinated fuses are connected in series with the release (trip) elements of the circuit breaker and are mounted within the housing of the circuit breaker.

Instantaneous is a qualifying term indicating that no delay is purposely introduced in the automatic tripping of the circuit breaker.

An Interchangeable Trip Unit is a trip unit which can be interchanged by a user among circuit breaker frames of the same design.

Inverse Time is a qualifying term indicating that there is a purposely introduced delayed tripping in which the delay decreases as the magnitude of the current increases.

A Marine Circuit Breaker is a circuit breaker designed and constructed to meet special requirements for marine use.

Copyright National Electrical Manufacturers Association
Provided by IHS under license with NEMA
No reproduction or networking permitted without license from IHS
Not for Resale

A Mechanical Interlock is a device which interlocks two or more breakers or switches together so that only selected ones can be closed at the same time.

Mechanism

a) *A External* operating mechanism of a breaker or switch is a mechanism which engages the handle of a circuit breaker mounted within an enclosure and provides a manual means for operating the circuit breaker from outside the enclosure.

b) *An Internal* mechanism of a breaker or switch is a mechanism by which the main contacts of a circuit breaker are actuated.

A Molded Case Circuit Breaker is one which is assembled as an integral unit in a supportive and enclosed housing of insulating material.

A Molded Case Switch is a device designed to open and close a circuit by nonautomatic means, assembled as an integral unit in a supportive and enclosed housing of insulating material.

A Multipole Circuit Breaker is a breaker with two or more poles which provide two or more separate conducting paths in which the poles are insulated from each other and are coupled in such a manner as to operate simultaneously.

A Neutral (or Solid Neutral) is an assembly consisting of an appropriate number of terminals providing for the connection of the grounded neutral conductors. When used as a component of service equipment, the neutral also includes (1) a means for making the required bonding connection between the neutral and the enclosure and (2) a terminal for the service grounding conductor.

An Overcurrent Release (Trip) is a component, which, for a given pole of a circuit breaker, detects overcurrent and transmits the energy necessary to trip the breaker automatically. It may actuate the breaker operating mechanism directly or may form part of a trip unit.

A Pick-Up Point is the rms current level at which the circuit braker tripping function is initiated.

A Pole (of a Circuit Breaker or Switch) is that portion of a breaker or switch associated exclusively with one electrically separated conducting path of its main circuit.

A Rated Control Voltage is the designated voltage which is to be applied to the closing or tripping devices to open or close a breaker or switch.

The control voltage is allowed to vary above or below the rated control voltage within a specified range. The control voltage is measured at the terminals of the operating coils or electric operating means with the operating current flowing.

Rated Frequency is the service frequency of the circuit for which the breaker or switch is designed and tested.

Rated Insulation Voltage (Ui) of a breaker or switch is, unless otherwise stated, the value of the maximum rated operational voltage. In no case shall the maximum rated operational voltage exceed the rated insulation voltage.

A Rating is the designated limit(s) of the rated operating characteristic(s) of a device.

A Release is a device, mechanically connected within the circuit breaker, which initiates the tripping function of a circuit breaker.

A Rear-Connected Circuit Breaker is one in which the current-carrying conductors are connected to terminals accessible from the back of the breaker.

Service Conditions are the conditions under which a breaker or switch is to be applied.

Copyright National Electrical Manufacturers Association
Provided by IHS under license with NEMA
No reproduction or networking permitted without license from IHS
Not for Resale

Service Equipment is the necessary equipment, usually consisting of a circuit breaker, or switch and fuses, and their accessories, located near the point of entrance of supply conductors to a building and intended to constitute the main control and means of disconnecting for the supply to that building.

Short Time Delay is a qualifying term indicating that there is a purposely introduced delayed tripping action. The short time delay action may have either finite or inverse time characteristics.

A Shunt-Trip Device is a release mechanism energized by a source of voltage which may be derived either from the main circuit or from an independent source.

A Trip-Free Circuit Breaker is a circuit breaker designed so that the contacts cannot be held in the closed position by the operating means during the trip command conditions.

Tripping is the opening of a circuit breaker by actuation of the release mechanism.

A Trip Unit of a Circuit Breaker is a self-contained portion of a circuit breaker which actuates the mechanism that opens the circuit breaker contacts automatically.

An Undervoltage Release is a release mechanism which causes a circuit breaker to open automatically if the control voltage falls below a predetermined value.

Withstand Current (I_{wc}) is the assigned rms symmetrical current that a circuit breaker can carry in the closed position for a specified time.

Copyright National Electrical Manufacturers Association
Provided by IHS under license with NEMA
No reproduction or networking permitted without license from IHS
Not for Resale

APPENDIX B

UL REQUIREMENTS FOR MOLDED CASE CIRCUIT BREAKERS

Significance of a UL Listed Product

A UL label on a molded case circuit breaker means that the breaker has met the basic requirements for circuit breakers covered by Underwriters Laboratories Inc. (Standard UL 489). These requirements are based on sound engineering principles, research, records of test and field experience, and use information obtained from users, inspection authorities and others having specialized experience. These requirements are subject to revision as necessary.

A UL label on a circuit breaker also means that the manufacturer's production is monitored at the factory by UL inspectors to assure continuing conformance to the UL performance requirements.

Highlights of performance requirements as contained in UL 489 are listed below:

Performance Requirements for Molded Case Circuit Breakers Initial Submittal to UL

After a new circuit breaker has been designed and built from production tooling, it is submitted to UL for a series of tests.

Limited Available Fault-current Circuit Tests

All of these standard tests, which are listed below, are performed sequentially on a single set of sample breakers.

1. **200 Percent Calibration.** Each pole of the circuit breaker must trip within a specified time limit when carrying 200 percent of its continuous current rating, with the applicable 60°C or 75°C wire size.
2. **135 Percent Calibration.** With all of the poles connected in series, the circuit breaker must trip within a specified time limit when carrying 135 percent of its continuous current rating.
3. **Magnetic Calibration.** If the circuit breaker has an additional adjustable magnetic tripping means, then it must trip within a specified percentage of the marked tripping current.
4. **Overload.** The circuit breaker is operated making and breaking 600 percent of its rated current, but not less than 150 amperes. For breakers through 1600 amperes, the number of 600 percent operations is 50. For larger breakers to 3000 amperes, the number of operations is at least 25.
5. **Tungsten-Filament-Lamp Load.** Circuit breakers rated 50 amperes or less and 125 or 125/250 volts or less are closed into a tungsten-filament-lamp load to ensure the breaker does not trip and that its contacts do not weld.
6. **Temperature Rise.** While carrying 100 percent of rated current, the circuit breaker mounted in open air is checked for temperature rise and must be within specified limits at terminations and other critical locations.
7. **Endurance.** The circuit breaker must complete successfully the following number of operations:

FRAME SIZE	FULL LOAD	NO LOAD	NUMBER PER MINUTE
0-100	6,000	4,000	6
101-225	4,000	4,000	5
226-600	1,000	5,000	4
601-801	500	3,000	1
801-2500	500	2,000	1
2501-4000	400	1,100	1

8. **Recalibration Test.** Both the 200 percent and 135 percent calibration tests are repeated.
9. **Short-Circuit.** For breakers rated 240 volts and up a minimum of two short-circuit tests per pole and one with all the poles connected. For a three-pole breaker, this means a minimum of seven short-circuit tests. For breakers rated 120/240 volts, a minimum of 3 tests are made with all poles connected. The short-circuit current, ranges from a minimum of 5000 amperes, minimum available fault current, to 45,000 amperes, depending on breaker frame size and whether individual poles are being tested or whether all poles are connected in test. The circuit breaker is to be connected to the test circuit using wire correctly sized for the rating of the circuit breakers. The line leads shall not be more than 4 feet long and the load leads shall not be more than 10 inches long.
10. **Trip Out.** The 200 percent calibration test is repeated following the short-circuit tests.
11. **Dielectric.** The circuit breaker must withstand for one minute twice-rated voltage plus 1000 volts:
    a. Between line and load terminals with breaker in the open, closed, and tripped positions
    b. Between poles when breaker is closed
    c. Between live parts and ground, with the breaker in the open and closed positions.

During the test program, no conditioning of the breaker can take place and at the conclusion of the test sequence, there cannot be any failure of functional parts.

Copyright National Electrical Manufacturers Association
Provided by IHS under license with NEMA
No reproduction or networking permitted without license from IHS
Not for Resale

High Available Fault-Current Circuit Tests

High Fault-Current Test: After qualifying a set of breakers to the standard tests, a manufacturer may submit additional circuit breaker samples for the tests on higher than standard fault-currents.

The performance requirements of breakers for use on high-available-fault currents are:

1. 200 percent calibration test—see page 63, item 1.
2. Short-circuit test—with the load side terminals connected with 10″ lengths of specified cable, the short-circuit current (as determined by the manufacturer) is applied to the circuit breaker. After a set-time interval, the circuit breaker is then closed on the short-circuit.
3. Following the short-circuit test, a calibration test is performed at 250 percent of breaker-rated current.
4. A dielectric withstand test is then performed, same as under "Standard Tests" except that the voltage is twice rated voltage but not less than 900 volts.

With successful performance, the circuit breakers will then be marked or labeled with the current-interrupting rating or ratings.

Switching Duty (SWD)

After qualifying a set of breakers to the limited available fault-current circuit tests, a manufacturer may submit additional samples for the tests for switching duty. The SWD listing applies to 277 volts or less, 15 and 20 ampere breakers only. The breakers are subjected to special temperature rise tests at predetermined times during the specified endurance operation. Upon successful completion, the breakers can be marked SWD.

Performance Requirements for Instantaneous Trip Only Breakers

The test sequence for verification of design performance is:

1. Verification of calibration
2. Overload
3. Temperature rise
4. Mechanical and Electrical Endurance
5. Limited Fault-Current
6. Re-Verification of Calibration
7. Dielectric.

All tests are under limited available fault-current circuit tests except during short-circuit test, the fusing of the magnetic trip coil is acceptable.

Instantaneous trip only breakers are not intended for use on service entrance feeders, as branch or service circuit breakers. Therefore, these breakers are recognized under the UL component program; and the final acceptance by UL of these breakers is dependent upon their use in complete equipment submitted to UL.

Performance Requirements for Molded Case Switches

Since molded case switches are derivatives of molded case circuit breakers, some testing of the switches is identical to that for breakers. These tests include a 600 percent overload performance test.

UL Listed Products

UL listed products are designed to fully comply with all the construction and performance requirements of the category. Inverse time type circuit breakers can be a UL listed product.

Recognized Component

Recognized components are devices which must be used in combination with other designated products, in order for the complete assembly to be suitable for UL listing. An example of a recognized component is an instantaneous only circuit breaker.

Follow-Up Tests

Underwriters Laboratories Inc. requires that continual testing be conducted on circuit breakers. These follow-up tests are scheduled on a regular, quarterly, semiannual, annual, and biennial basis.

Copyright National Electrical Manufacturers Association
Provided by IHS under license with NEMA
No reproduction or networking permitted without license from IHS
Not for Resale

The regular tests are conducted on a representative lot of breakers and consist of calibration checks, both 200 percent and 135 percent. The regular tests may also include a complete detailed inspection for constructional compliance. The regular tests may be conducted on any rating breaker and at any random time interval.

The quarterly, semiannual, and annual tests are generally conducted on the lowest and highest ratings of each family (similar construction) of circuit breakers. Three different types of test sequences (X,Y, and Z) are used. Each of these sequences is a portion of the full series of tests required for initial UL submittal. Each of these test sequences is conducted on a lot of new, unconditioned circuit breakers. The sequence of the tests in these groups is mandatory.

The three test sequences (X, Y, and Z) are listed below:

Sequence X. Conducted quarterly on breakers of frame size 200 amperes or less and annually on breakers of frame size over 200 amperes.

Calibration—200 percent
—135 percent
Overload
100 percent at 40°C
Temperature
Dielectric

Sequence Y. Conducted quarterly on breakers of frame size 200 amperes or less and annually on breakers of frame size over 200 amperes.

Calibration—200 percent
Endurance—Load
—No Load
Recalibration—200 percent
—135 percent
Dielectric

Sequence Z. Conducted semiannually on breakers of frame size 150 amperes or less and annually on breakers of frame size over 150 amperes.

Calibration—200 percent
Short Circuit
Trip Out—200 percent
Dielectric

The biennial tests are conducted on circuit breakers that have interruption ratings. Tests are conducted at the interruption ratings that represent maximum current, maximum voltage, and maximum KVA. These three levels are tested in rotation either two or three years apart. The sequence of these tests is 200 percent calibration, short circuit 250 percent trip out, and dielectric.

The UL follow-up testing begins with samples from the initial production run of a newly-labeled product. This would be either a completely new label or one regained through UL engineering. The samples from the initial production run are tested under the annual test program (Sequence X, Y, and Z). The timing of the follow-up program begins with this annual test.

Copyright National Electrical Manufacturers Association
Provided by IHS under license with NEMA
No reproduction or networking permitted without license from IHS
Not for Resale

NEMA STANDARDIZATION

The purpose of NEMA Standards, their classification and status are set forth in certain clauses of the NEMA Bylaws, which are quoted below:

Purpose of Standards

National Electrical Manufacturers Association Standards are adopted in the public interest and are designed to eliminate misunderstandings between the manufacturer and the purchaser and to assist the purchaser in selecting and obtaining the proper product for its particular need. Existence of a National Electrical Manufacturers Association Standard does not in any respect preclude any member or nonmember from manufacturing or selling products not conforming to the standard.

(Bylaw—Art. V, Sec. 1)

Definition of a Standard

A standard of the National Electrical Manufacturers Association defines a product, process or procedure with reference to one or more of the following: nomenclature, composition, construction, dimensions, tolerances, safety, operating characteristics, performance, rating, testing, and the service for which they are designed.

(Bylaw—Art. V, Sec. 2, Subsection A)

Dimensions

Where dimensions are given for interchangeability purposes, alternate dimensions satisfying the other provisions of the standards publication may be capable of otherwise equivalent performance.

(NEMA Policy Memorandum 84-2, dated June 7, 1984)

Classes of Standards

National Electrical Manufacturers Association Standards are of two classes:

1. NEMA Standard, which relates to a product commercially standardized and subject to repetitive manufacture, which standard has been approved by at least 90 percent of the members of the Subdivision eligible to vote thereon;
2. Suggested Standard for Future Design, which may not have been regularly applied to a commercial product, but which suggests a sound engineering approach to future development, which standard has been approved by at least two-thirds of the members of the Subdivision eligible to vote thereon.

(Bylaw—Art. V, Sec. 2, Subsection B)

Authorized Engineering Information

Authorized Engineering Information consists of explanatory data and other engineering information of an informative character not falling within the classification of NEMA Standard or Suggested Standard for Future Design.

(Bylaw—Art. V, Sec. 6, 1st Sentence)

Official Standards Proposal

An Official Standards Proposal is an official draft of a proposed standard which is formally recommended to an outside organization(s) for consideration, comment and/or approval.

(Bylaw—Art. V, Sec. 4, Subsection A)

Identification of Status

Standards in NEMA Standards Publications are identified in the foreword or following each standard as "NEMA Standard" or "Suggested Standard for Future Design." These indicate the status of the standard. These words are followed by a date which indicates when the standard was adopted in its present form by the Association.

The material identified as "Authorized Engineering Information" and "Official Standards Proposal" is designated similarly.

Copyright National Electrical Manufacturers Association
Provided by IHS under license with NEMA
No reproduction or networking permitted without license from IHS
Not for Resale

MOLDED CASE BREAKER SECTION OF THE NATIONAL ELECTRICAL MANUFACTURERS ASSOCIATION

MEMBER COMPANIES

Challenger Electric Equipment Corp.
Malvern, PA 19355

Crouse-Hinds Company
Earlysville, VA 22936

Eaton Corporation
Cutler-Hammer Products
Milwaukee, WI 53216

Federal Pacific Electric Company
Raleigh, NC 27607

General Electric Company
Plainville, CT 06062

Heinemann Electric Company
Lawrenceville, NJ 08648-0800

Klockner Moeller Corp.
Natick, MA 01760

I-T-E Electrical Products
A Division of Siemens-Allis, Inc.
Tucker, GA 30084

Square D Company
Palatine, IL 60067

Unicorn Electrical Products
Anaheim, CA 92806

The Wadsworth Electric Mfg. Co., Inc.
Covington, KY 41012

Westinghouse Electric Corporation
Beaver, PA 15009

Copyright National Electrical Manufacturers Association
Provided by IHS under license with NEMA
No reproduction or networking permitted without license from IHS
Not for Resale