AB 1-86 6470247 0006568 8 A-11-01

National Electrical Manufacturers Association
2101 L Street, N.W. Suite 300
Washington, D.C. 20037 (202) 457-8400

PROPOSED, NEW AND REVISED STANDARDS

5-AB Page 27
September 27, 1989

TO ALL REPRESENTATIVES OF MEMBER COMPANIES
IN THE MOLDED CASE CIRCUIT BREAKER SECTION

Subject: Revision No. 1 to NEMA Standards Publication for
Molded Case Circuit Breakers, NEMA Pub. No. **AB 1-1986**

Dear Representative:

At its January 9, 1989 meeting, the Codes and Standards Committee approved Revision 1 of Publication AB 1-1986. This revision changes the note listed under Table 4-2 on page 14.

Attached is the revision, including a new title page.

Please insert these pages and remove the pages that they replace.

Sincerely,

Krystyna A. McIver

Krystyna A. McIver
Standards Publications Editor

Encl: Revision 1 to AB1-1986
cc: All known holders of AB1-1986

Copyright National Electrical Manufacturers Association
Provided by IHS under license with NEMA
No reproduction or networking permitted without license from IHS
Not for Resale

AB 1

MOLDED CASE CIRCUIT BREAKERS AND MOLDED CASE SWITCHES

Revision No.1—January 1989

Published by

National Electrical Manufacturers Association
2101 L Street, N.W.
Washington, D.C. 20037

© 1987 by National Electrical Manufacturers Association

Copyright National Electrical Manufacturers Association
Provided by IHS under license with NEMA
No reproduction or networking permitted without license from IHS
Not for Resale

A-11-01

AB 1-86 6470247 0000292 7

NEMA STANDARDS PUBLICATION NO. AB 1

nema

Molded Case Circuit Breakers and Molded Case Switches

NEMA

NATIONAL ELECTRICAL MANUFACTURERS ASSOCIATION ■ 2101 L STREET, N.W., WASHINGTON, D.C. 20037

Copyright National Electrical Manufacturers Association
Provided by IHS under license with NEMA
No reproduction or networking permitted without license from IHS
Not for Resale

TABLE OF CONTENTS

		Page
	SCOPE	i
	PURPOSE	ii
Section 1	ABBREVIATIONS, SYMBOLS, DEFINITIONS AND REFERENCES	
	Abbreviations and Symbols	1
	Definitions	2
	References	5
Section 2	GENERAL	
	Characteristics of Molded Case Circuit Breakers and Molded Case Switches	6
Section 3	CONSTRUCTION REQUIREMENTS	
	General	10
	Corrosion Protection	10
	Operating Mechanism	10
	Spacings	10
	Terminals	10
Section 4	PERFORMANCE REQUIREMENTS AND VERIFICATION TESTS	
	General	11
	Standard Design Verification Tests	13
	Rated Short-Circuit Capacity Tests	35
Section 5	PERIODIC VERIFICATION TESTS	41
Section 6	FIELD TESTS	42
Section 7	SPECIFIC APPLICATION CIRCUIT BREAKERS	
	General	43
	Instantaneous Trip Circuit Breakers	43
	Integrally Fused Circuit Breakers	45
	Current Limiting Circuit Breakers	46
	Marine Circuit Breakers	46
	Mining Circuit Breakers	48
	Molded Case Switches	49
	Electronic Trip Unit Circuit Breakers	51
	Switching Duty Circuit Breakers	53
	Rated Short-Time Withstand Current (Icw) Rated Circuit Breakers	54
Section 8	ACCESSORIES	
	General	55
	General Requirements	55
	Shunt-Trip Release	55
	Undervoltage Trip Release	56
	Auxiliary and Alarm Switches	57
	Electrical Operator	57
	Fuse Accessory Package	58
	Mechanical Interlock	58
	Handle Lock	59

Copyright National Electrical Manufacturers Association
Provided by IHS under license with NEMA
No reproduction or networking permitted without license from IHS
Not for Resale

TABLE OF CONTENTS *(continued)*

Section 9 CIRCUIT BREAKER AND MOLDED CASE SWITCH ENCLOSURES

Enclosures for General Use 60
Test Enclosures 61

Section 10 MARKING REQUIREMENTS

Circuit Breaker Marking(s) 63
Molded Case Switch Marking(s) 63
Accessory Marking(s) 63
Marking of Enclosures 63
Marking Information 64

Section 11 DETERMINATION OF SHORT-CIRCUIT CURRENT, POWER FACTOR, AND RECOVERY VOLTAGE

Instrumentation 65
Circuit Conditions 65
Alternating Current Circuits of 10,000 Amperes or less 65
Alternating Current Circuits of Greater Than 10,000 Amperes 67
Recovery Voltage 67
Direct Current Calibration 67

Section 12 CLEARANCES AND CREEPAGE DISTANCES FOR CIRCUIT BREAKERS 70

Appendix A DETERMINATION OF SHORT CIRCUIT CURRENTS IN LOW VOLTAGE SYSTEMS 72

Copyright National Electrical Manufacturers Association
Provided by IHS under license with NEMA
No reproduction or networking permitted without license from IHS
Not for Resale

Scope

This Standards Publication covers General Duty and Specific Application Single-Pole and Multipole Molded Case Circuit Breakers and Molded Case Switches. These circuit breakers and switches are assembled as integral units in a supporting housing of insulating material and have rated voltages up to and including 1000 volts AC (50/60Hz), 1200 volts DC. Circuit breakers covered by this Standards Publication also have rated interrupting currents of more than 1000 amperes. This Publication also covers accessories and individual enclosures used with the above circuit breakers and switches.

Wherever the term "circuit breaker" or "breaker" appears in this Publication, it shall mean "molded case circuit breaker." Wherever the term "switch" appears in this Publication, it shall mean "molded case switch."

The values stated in U.S. customary units are considered to be standard.

Copyright National Electrical Manufacturers Association
Provided by IHS under license with NEMA
No reproduction or networking permitted without license from IHS
Not for Resale

Purpose

Breakers and switches are designed for general duty or, if so marked, for specific uses and applications, such as marine duty, mining duty, switching duty, and such, and/or functions such as current-limiting and/or Ground Fault Protection For Equipment (GFP), and such.

The purpose of this Standards Publication is to state, for molded case circuit breakers and molded case switches covered within the scope of this Standards Publication:

1. Service Conditions (Paragraph 2.1.3).
2. Construction (Manufacturing) Requirements (Section 3).
3. Performance Requirements (Section 4).
4. Tests to Verify Performance (Section 4).
5. Marking Requirements (Section 10).

Copyright National Electrical Manufacturers Association
Provided by IHS under license with NEMA
No reproduction or networking permitted without license from IHS
Not for Resale

MOLDED CASE CIRCUIT BREAKERS AND MOLDED CASE SWITCHES

Section 1

ABBREVIATIONS, SYMBOLS, DEFINITIONS, AND REFERENCES

1.1 ABBREVIATIONS AND SYMBOLS

A	Amperes
AC	Alternating Current
AWG	American wire gage
C	Celsius
CO	Making operation followed immediately by a breaking operation, circuit breaker.
DC	Direct Current
E	Voltage
F	Fahrenheit
Hz	Frequency in Cycles per Second—Hertz
I	Current
▌	Closed position (Marking)
I_{cm}	Rated short-circuit making capacity
I_{cu}	Rated short-circuit breaking capacity
I_{cw}	Rated withstand current
I_n	Rated current
I_2	Peak current
I^2t	Amperes squared seconds
L	Inductance—Henrys
MCM	Thousand circular mils
M	Meter
M_A	Ratio of Asymmetrical to Symmetrical Current (3-Phase)
M_M	Ratio of Asymmetrical to Symmetrical Current (l-Phase)
mm	Millimeter
ms	Millisecond
N	Neutral
O	Breaking operation, circuit breaker
o	Open position (Marking)
R	Resistance—OHMS, in general
RH	Rubber covered conductor, heat resistant, rated 75°C
rms	Root mean square
SWD	Switching duty
T	Tripping time or time
t	Time interval
T_1	Temperature-Celsius Degrees, cold
T_2	Temperature-Celsius Degrees, hot
TC	Thermocouple
THW	Thermoplastic covered conductor, moisture and heat resistant, rated 75°C
TW	Thermoplastic covered conductor, moisture resistant, rated 60°C
U_e	Rated operational voltage
U_i	Rated insulation voltage
V	Voltage
Z	Impedance
Ø	Phase
Ø	Angle between voltage vector and current vector

Copyright National Electrical Manufacturers Association
Provided by IHS under license with NEMA
No reproduction or networking permitted without license from IHS
Not for Resale

1.2 DEFINITIONS

Accessories are devices which perform a secondary or minor duty as an adjunct or refinement to the primary or major duty of a circuit breaker.

Adjustable Instantaneous Release (Trip) is that part of an overcurrent trip element which contains a means that can be adjusted to trip a breaker instantaneously at various values of current within a predetermined range of currents.

Air Circuit Breaker is one in which the interruption occurs in air. (See "Circuit Breaker.")

Alarm Switch (Switching Device) is an auxiliary switch that operates to open or close a circuit upon the automatic opening of the circuit breaker with which it is associated.

Ambient-Compensated Circuit Breaker is one in which means are provided for partially or completely neutralizing the effect of ambient temperature upon the tripping characteristics.

Ambient Temperature is the average temperature of the surrounding medium that comes in contact with the breaker or switch. For an enclosed device, it is the average temperature of the medium outside the enclosure.

Auxiliary Switch is a switch which is mechanically operated by the main device for signaling, interlocking or other purposes.

NOTE: Auxiliary switch contacts shall be permitted to be designated as "a" or "b" as indicated below, but other contact arrangements shall be permitted to be used.

"a" contacts-open when the breaker or switch contacts are open, and closed when the circuit breaker contacts are closed.

"b" contacts-closed when the breaker or switch contacts are open, and open when the circuit breaker contacts are closed.

Calibration Setting is the adjustment of the release mechanism of a circuit breaker to make the breaker perform in accordance with its prescribed characteristics.

Calibration Test is one which is made at a selected percentage or multiple of the marked current rating of the circuit breaker to verify the tripping characteristics of the circuit breaker.

Circuit Breaker is a device designed to open and close a circuit by nonautomatic means, and to open the circuit automatically on a predetermined overcurrent, without injury to itself when properly applied within its rating.

Circuit Breaker Enclosure is an enclosure intended to house a single circuit breaker (single or multipole or two single-pole breakers).

Circuit Breakers Incorporating Ground Fault Protection for Equipment (GFP) are circuit breakers which perform all normal circuit breaker functions and also trip when a fault current to ground exceeds some predetermined value.

NOTE: The ground fault current sensing means shall be permitted to be either integral or non-integral with the circuit breaker.

Common Trip Type Circuit Breaker is a multipole circuit breaker constructed so that all poles will open when any one or more poles open automatically.

Cross-Over Current of a Fused Circuit Breaker is the current at which the function of the fuse coincides with the operation of the trip mechanism of the circuit breaker, i.e., where the fuse clearing time curve crosses the circuit breaker trip characteristic curve.

Current Limiting Circuit Breaker is a circuit breaker that does not employ a fusible element and that when operating within its current-limiting range, limits the let-through I^2t to a value less than the I^2t of a ½-cycle wave of the symmetrical prospective current.

Current-Limiting Fused Circuit Breaker is a circuit breaker in combination with integral current-limiting fuses which, when it interrupts a current within its current limiting range, purposely introduces an impedance to reduce the current magnitude and duration. The values of peak let-through current and I^2t characteristic are used as measures of the current limiting ability of the combination device.

Dielectric Withstand Voltage Tests are tests made to determine the ability of the insulating materials and spacings used to withstand overvoltages without flashover or breakdown under specified conditions.

Drawout-Mounted Circuit Breaker is an assembly of a circuit breaker together with a supporting structure so constructed that the breaker is supported and

Copyright National Electrical Manufacturers Association
Provided by IHS under license with NEMA
No reproduction or networking permitted without license from IHS
Not for Resale

can be moved to either the main circuit connected or disconnected position without the necessity of removing connections or mounting supports.

The structure includes both self-supporting circuit terminals and an interlocking means which permits movement of the breaker between the main circuit connected and disconnected positions only when the breaker contacts are in the open position.

Electrical Operator is an electrical controlling device which is used to open and close a breaker or switch and reset a circuit breaker.

Endurance Test is one which is made to determine compliance with a specified number of mechanical and electrical operations.

Enclosure is a surrounding case constructed to provide a degree of protection to personnel against incidental contact with the enclosed equipment and to provide a degree of protection to the enclosed equipment against specified environmental conditions.

Fixed Instantaneous Release (Trip) is that part of an overcurrent release element which contains a nonadjustable means that is set to trip a breaker instantaneously at or above a predetermined value of current.

Frame is an assembly consisting of all parts of a circuit breaker except an interchangeable trip unit.

Frame Size applies to a group of molded case circuit breakers which are physically interchangeable with each other. Frame size is expressed in amperes and corresponds to the largest ampere rating available in the group.

Groups may or may not be physically interchangeable with each other whether furnished by one or various manufacturers.

Front-Connected Circuit Breaker is one in which the terminals for connecting or disconnecting conductors are accessible from the front of the breaker.

Handle Lock is a device which provides for a positive means of retaining the breaker (or switch) handle in a desired position with or without means for locking or sealing.

Ignition-Protected Circuit Breaker is a circuit breaker designed and constructed so that it will not ignite an explosive atmosphere surrounding the device under normal operating conditions.

Independent Trip Type Circuit Breaker is a multipole circuit breaker constructed such that all poles are not intended to open when one or more poles open automatically.

Integrally-Fused Circuit Breaker is one in which coordinated fuses are connected in series with the release (trip) elements of the circuit breaker and are mounted within the housing of the circuit breaker.

Instantaneous is a qualifying term indicating that no delay is purposely introduced in the automatic tripping of the circuit breaker.

Interchangeable Trip Unit is a trip unit which can be interchanged by a user among circuit breaker frames of the same design.

Instantaneous Trip Circuit Breaker (also called a motor circuit interrupter or motor circuit protector) is a circuit breaker intended to provide short circuit protection with no overload protection. Although acting instantaneously under short circuit conditions, instantaneous breakers shall be permitted to include a transient dampening action to ride through initial motor transients.

Inverse Time is a qualifying term indicating that there is a purposely introduced delayed tripping in which the delay decreases as the magnitude of the current increases.

Marine Circuit Breaker is a circuit breaker designed and constructed to meet special requirements for marine use.

Mechanical Interlock is a device which interlocks two or more breakers or switches together so that only selected ones can be closed at the same time.

Mechanisms

An External Operating Mechanism of a breaker or switch is a mechanism which engages the handle of a circuit breaker mounted within an enclosure and provides a manual means for operating the circuit breaker from outside the enclosure.

An Internal Mechanism of a breaker or switch is a mechanism by which the main contacts of a circuit breaker are actuated.

Molded Case Circuit Breaker is a circuit breaker which is assembled as an integral unit in a supportive and enclosed housing of insulating material.

Copyright National Electrical Manufacturers Association
Provided by IHS under license with NEMA
No reproduction or networking permitted without license from IHS
Not for Resale

Molded Case Switch is a device designed to open and close a circuit by nonautomatic means, assembled as an integral unit in a supportive and enclosed housing of insulating material.

A **Multipole Circuit Breaker** is a breaker with two or more poles which provide two or more separate conducting paths in which the poles are insulated from each other.

Neutral (or Solid Neutral) is an assembly consisting of an appropriate number of terminals providing for the connection of the grounded neutral conductors. When used as a component of service equipment, the neutral also includes: (1) a means for making the required bonding connection between the neutral and the enclosure, and (2) a terminal for the service grounding conductor.

Overcurrent Release (Trip) is a component, which, for a given pole of a circuit breaker, detects overcurrent and transmits the energy necessary to trip the breaker automatically. It may actuate the breaker operating mechanism directly or may form part of a trip unit.

Pick-Up Point is the rms current level at which the circuit breaker tripping function is initiated.

Pole (of a circuit breaker or switch) is that portion of a breaker or switch associated exclusively with one electrically separated conducting path of its main circuit.

Rated Current (I_n). See 2.1.2.2.

Rated Control Voltage is the designated voltage which is to be applied to the closing or tripping devices to open or close a breaker or switch.

The Control Voltage is allowed to vary, above or below the rated control voltage, within a specified range. The control voltage is measured at the terminals of the operating coils or electric operating means with the operating current flowing.

Rated Frequency is the service frequency of the circuit for which the breaker or switch is designed and tested. (See 2.1.2.3.)

Rated Insulation Voltage (U_i) is the value of voltage to which dielectric voltage tests and creepage distances are referred. (See 2.1.2.1.)

Rated Operational Voltage (U_e) is the maximum voltage, rms if alternating current, at which the breaker or switch can be applied. (See 2.1.2.1.)

Rated Short-Time Withstand Current Rating (I_{cw}) is the rated short-time withstand current rating of a breaker or switch is that value of current assigned by the manufacturer that the device can carry, under prescribed conditions, without injury to itself (see 7.10), when properly applied within its rating.

Rating is the designated limit(s) of the rated operating characteristic(s) of a device.

Release is a device, mechanically connected within the circuit breaker, which initiates the tripping function of a circuit breaker.

Rear-Connected Circuit Breaker is one in which the current-carrying conductors are connected to terminals accessible from the back of the breaker.

Service Conditions are the conditions under which a breaker or switch is to be applied. Service Equipment is the necessary equipment, usually consisting of a circuit breaker, or switch and fuses, and their accessories, located near the point of entrance of supply conductors to a building and intended to constitute the main control and means for disconnecting the supply to that building.

Short Time Delay is a qualifying term indicating that there is a purposely introduced delayed tripping action. The short-time-delay action may have either finite or inverse time characteristics.

Shunt-Trip Device is a release mechanism energized by a source of voltage which may be derived either from the main circuit or from an independent source.

Trip-Free Circuit Breaker is a circuit breaker designed so that the contacts cannot be held in the closed position by the operating means during trip command conditions.

Tripping is the opening of a circuit breaker by actuation of the release mechanism.

Trip Unit of a Circuit Breaker is a self-contained portion of a circuit breaker which actuates the mechanism that opens the circuit breaker contacts automatically.

Undervoltage Release is a release mechanism which causes a circuit breaker to open automatically if the control voltage falls below a predetermined value.

Withstand Current (I_{cw}) is the assigned rms symmetrical current that a circuit breaker can carry in the closed position for a specified time. (See 7.10.)

Copyright National Electrical Manufacturers Association
Provided by IHS under license with NEMA
No reproduction or networking permitted without license from IHS
Not for Resale

1.3 REFERENCES

National Fire Protection Association
Batterymarch Park
Quincy, MA 02269

NFPA 70-1984 — *National Electrical Code*

NFPA 302-1984 — *Fire Protection Standard for Pleasure and Commercial Motor Craft*

National Electrical Manufacturers Association
2101 L Street, N.W., Suite 300
Washington, D.C 20037

AB 2-1984 — *Procedures for Field Inspection and Performance Verification of Molded Case Circuit Breakers Used in Commercial and Industrial Applications*

AB 3-1984 — *Molded Case Circuit Breakers and Their Application*

250-1985 — *Enclosures for Electrical Equipment (1000 Volts Maximum)*

Underwriters Laboratories, Inc.
333 Pfingsten Road
Northbrook, IL 60062

UL 489 — *Molded Case Circuit Breakers and Circuit Breaker Enclosures* (Sixth Edition including revisions issued through August, 1985).

UL 1087-1986 — *Molded Case Switches*

UL 1053-1982 — *Ground Fault Sensing and Relaying Equipment*

Copyright National Electrical Manufacturers Association
Provided by IHS under license with NEMA
No reproduction or networking permitted without license from IHS
Not for Resale

Section 2
GENERAL

2.1 CHARACTERISTICS OF MOLDED CASE CIRCUIT BREAKERS AND MOLDED CASE SWITCHES

The characteristics of circuit breakers and switches shall be described by the following terms, where such terms are applicable:

NEMA Standard 11-20-1986.

2.1.1 Types

The following shall be stated:

1. Method of Operation (Manual, Electrical, and such).
2. Number of Poles.
3. Frame Size.
4. Types of Releases (Trips) Instantaneous, Adjustable, Time Delay, and such.
5. Terminations.

Breakers and switches are classified as to their terminations, such as plug-in, bolted, lugs, and such, or combinations thereof.

NEMA Standard 11-20-1986.

2.1.2 Ratings

2.1.2.1 RATED VOLTAGES

Breakers and switches shall be defined by the following rated voltages:

Rated Operational Voltage (U_e)

The rated operational voltage is the value of voltage to which the making and breaking capacities and the performance characteristics are referred.

It is stated as a single-phase voltage, a voltage between phases for polyphase circuits, a combination of phase voltage, and voltage to neutral, such as, 120/240, 480Y/277, 480, and such; or for direct current 125V DC, 125/250V DC, and such.

The same breaker or switch shall be permitted to be assigned a number of rated operational voltages and associated making and breaking capacities.

Rated Insulation Voltage (U_i)

Unless otherwise stated the rated insulation voltage of a breaker or switch is the value of the maximum rated operational voltage. In no case shall the maximum rated operational voltage exceed the rated insulation voltage.

NEMA Standard 11-20-1986.

2.1.2.2 RATED CURRENT (I_n)

The rated current is the marked current rating and is the maximum current that the unenclosed [1] equipment can carry when tested in air reasonably free from drafts and external radiation, without the temperature rise of its several parts exceeding the limits specified in 4.2.4 (Tables 4-8 and 4-10) when tested according to 4.2.4.

NEMA Standard 11-20-1986.

2.1.2.3 RATED FREQUENCY

The rated frequency is the service frequency for which a breaker or switch is designed and tested. A breaker or switch shall be permitted to have more than one rated frequency.

NEMA Standard 11-20-1986.

2.1.2.4 RATED TIME CONSTANT

For DC the rated time constant shall be in accordance with 4.2.7.4.3.

NEMA Standard 11-20-1986.

2.1.2.5 RATED SHORT-CIRCUIT CAPACITIES

Breakers and switches may be defined by the following rated short circuit capacities.

NEMA Standard 11-20-1986.

Rated Short-Circuit Making Capacity (I_{cm})

The value of short circuit making capacity assigned to that circuit breaker by the manufacturer for the rated operational voltage, at rated frequency, and at a specified power factor (or time constant). It shall be expressed as the maximum prospective peak current.

For AC, the rated short circuit making capacity of a circuit breaker shall be not less than its rated short-circuit breaking capacity, multiplied by the factor 'n' of Table 2-1.

For DC, the rated short-circuit making capacity of a circuit breaker shall be not less than its rated short-circuit breaking capacity, on the assumption that the steady state short-circuit current is constant.

---

[1] Molded Case Circuit Breakers and Molded Case Switches are normally mounted in a panelboard or other enclosure. (This note approved as Authorized Engineering Information.)

Copyright National Electrical Manufacturers Association
Provided by IHS under license with NEMA
No reproduction or networking permitted without license from IHS

Not for Resale

A rated short-circuit making capacity shall mean that the circuit breaker will be able to close on the current corresponding to that rated capacity at an applied voltage up to and including that corresponding to 100 percent of the rated operational voltage.

Rated Short-Circuit Breaking Capacity (I_{cu})

The rated short-circuit breaking capacity of a circuit breaker shall be the value of short-circuit breaking capacity assigned to that circuit breaker by the manufacturer at a rated operational voltage, a rated frequency and a specified power factor (or time constant). It shall be expressed as the value of the prospective breaking current (rms value of the AC component in the case of AC).

For AC, the circuit breaker shall be capable of breaking a prospective current corresponding to its rated short-circuit breaking capacity, irrespective of the value of the inherent DC component, on the assumption that the AC component is constant.

A rated short-circuit breaking capacity requires that the circuit breaker shall be able to break any value of current up to and including the value corresponding to that rated capacity at a power frequency recovery voltage equal to 100 percent of the rated operational voltage, and:

a. For AC, at any power factor equal to, or greater than, that of Table 2-1.
b. For DC, unless otherwise stated by the manufacturer, with any time constant equal to, or less than, that given in 4.2.7.4.3.

For power frequency recovery voltages in excess of 100 percent of the rated operational voltage, consult the manufacturer.

Relationship Between Rated Short-Circuit Making and Breaking Capacities and Power Factor

The relationship between rated short-circuit breaking capacity, power factor and minimum required rated short-circuit making capacity is given in Table 2-1.

Table 2-1
RATIO 'n' BETWEEN MINIMUM REQUIRED RATED SHORT CIRCUIT MAKING CAPACITY AND RATED SHORT CIRCUIT BREAKING CAPACITY

Rated Short-Circuit Breaking Capacity I_{cu} (amperes)	Power Factor	Minimum Required Rating Short-Circuited Making Capacity (n times rated short circuit breaking capacity) $n \times I_{cu}$
0–10,000	0.50	$1.7 \times 1_{cu}$
10,001–20,000	0.30	$2.0 \times I_{cu}$
20,001–and up	0.20	$2.2 \times I_{cu}$

NOTE: For power frequency recovery voltages in excess of the rated operational voltage, for power factors less than (or time constants greater than) the specified ones or power frequencies other than the rated frequency, consult the manufacturer.

The rated short-circuit making and breaking capacities are based on the circuit breaker being operated in accordance with the requirements of 4.3.

NEMA Standard 11-20-1986.

Copyright National Electrical Manufacturers Association
Provided by IHS under license with NEMA
No reproduction or networking permitted without license from IHS
Not for Resale

The manufacturer shall be permitted to assign a value of rated short-circuit making capacity higher than that required in Table 2-1.

NEMA Standard 11-20-1986.

2.1.2.6 TIME CURRENT CHARACTERISTIC

A typical circuit breaker time current curve is shown in Figure 2-1. For circuit breakers with solid state tripping means with multiple adjustments, refer to the manufacturer's tripping characteristic curve.

Authorized Engineering Information 11-20-1986.

2.1.3 Service Conditions

Breakers and switches complying with this Standards Publication shall be capable of operation under the following conditions:

Ambient Air Temperature

The ambient air temperature does not exceed +40 °C and is not below −5 °C. The user shall consult the manufacturer when the expected range of ambient air temperature is lower than −5 °C or higher than +40 °C.

NEMA Standard 11-20-1986.

Circuit breakers are calibrated for rated ambient temperature. Operation at other temperatures may affect the continuous current rating of some circuit breakers.

Authorized Engineering Information 11-20-1986.

Altitude

The altitude of the site of installation does not exceed 2,000 meters (6,600 feet). The user shall consult the manufacturer when the altitude of the place of installation is more than 2,000 meters (6,600 feet).

Atmospheric

The air is clean and its relative humidity does not exceed 50 percent at a maximum temperature of +40 °C.

NEMA Standard 11-20-1986.

Higher relative humidities are permitted at lower temperatures, e.g. 90 percent at +20 °C. Care should be taken of moderate condensation which may occasionally occur due to variations in temperature. The user should consult the manufacturer in situations where circuit breakers may be exposed to detrimental conditions such as exposure to corrosive or explosive fumes and exposure to dust or vapors. The same applies if a circuit breaker is to be exposed to a salt atmosphere.

Authorized Engineering Information 11-20-1986.

Vibration and Shock

Consult the manufacturer for applications under shock or vibration conditions.

Installation

The breaker or switch shall be installed in accordance with the manufacturer's instructions and local codes as applicable.

NEMA Standard 11-20-1986.

Copyright National Electrical Manufacturers Association
Provided by IHS under license with NEMA
No reproduction or networking permitted without license from IHS

Not for Resale

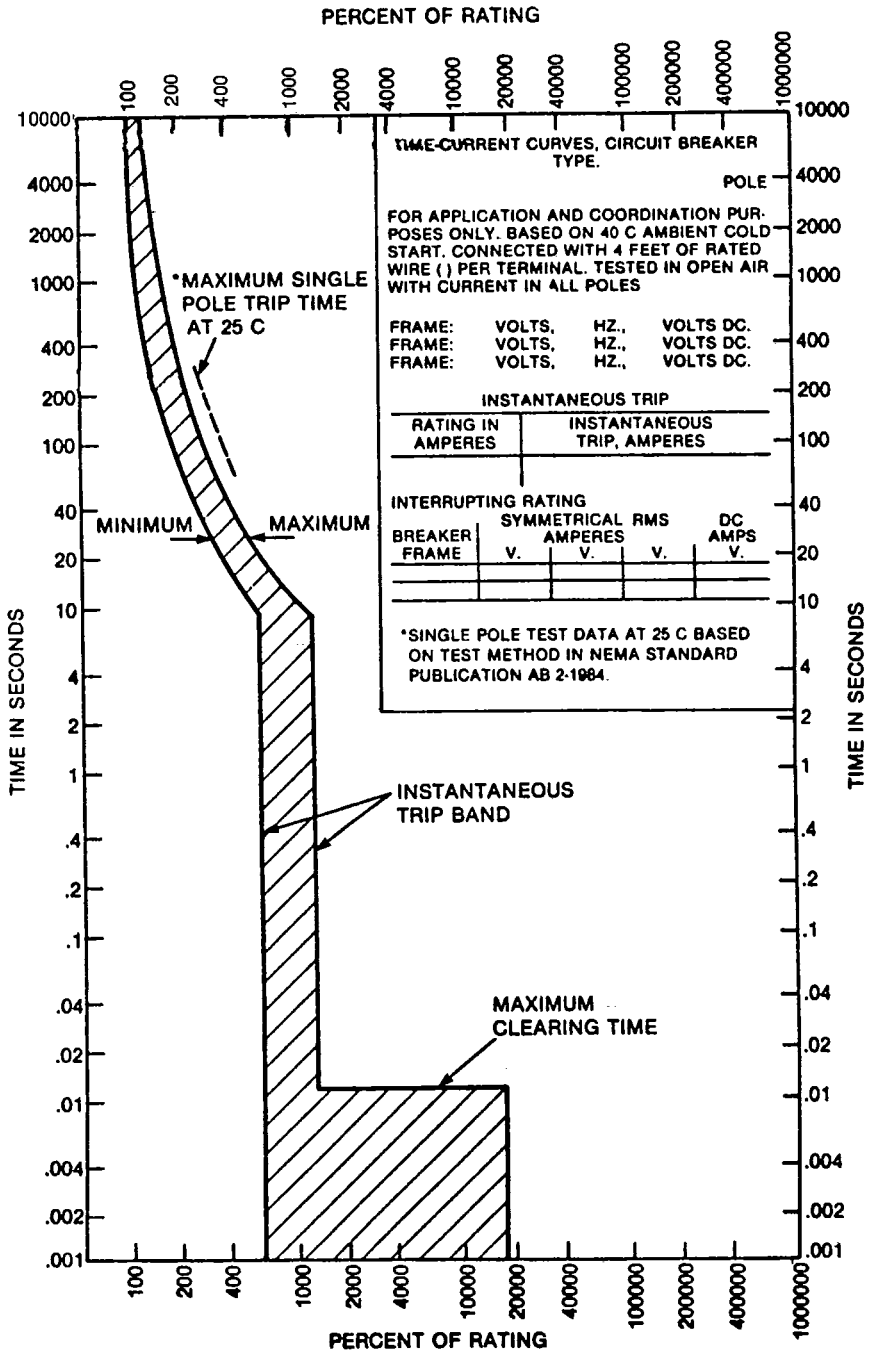

Figure 2-1
TYPICAL TIME-CURRENT CURVE FORMAT FOR MOLDED CASE CIRCUIT BREAKER

Copyright National Electrical Manufacturers Association
Provided by IHS under license with NEMA
No reproduction or networking permitted without license from IHS
Not for Resale

Section 3
CONSTRUCTION REQUIREMENTS

3.1 GENERAL

Materials shall be suitable for the particular application and capable of passing the appropriate tests.

Special attention shall be given to flame and humidity resisting qualities, and to the necessity to protect certain insulating materials against humidity.

No contact pressure on fixed electrical connections shall be transmitted through insulating material other than ceramic, or other material with suitable characteristics unless there is sufficient resiliency in the metallic parts to compensate for any possible shrinkage of the insulating material.

NEMA Standard 11-20-1986.

3.2 CORROSION PROTECTION

Aluminum, iron, and steel parts, except for thermal elements and hardened and polished parts such as latching surfaces, and such, shall be protected against corrosion by enameling, galvanizing, plating, or other equivalent means.

Stainless steel shall be acceptable without additional protection.

NEMA Standard 11-20-1986.

3.3 OPERATING MECHANISM

The internal operating mechanism of a circuit breaker shall be trip-free.

NEMA Standard 11-20-1986.

3.3.1 Handle Position

The design of the breaker or switch shall be such that, when used as intended, the handle cannot be left readily at or near the "OFF" position when the main contacts are closed.

NEMA Standard 11-20-1986.

3.3.2 Interchangeable Trip Unit

A circuit breaker having a frame size of 100 amperes or less in conjunction with a voltage rating of not more than 240v AC or 125/250v DC, shall not have an interchangeable trip unit.

NEMA Standard 11-20-1986.

3.3.3 Access to Calibration Settings

A circuit breaker with a non-interchangeable trip unit or an interchangeable trip unit shall be so sealed that tampering with the calibration or interference with the automatic operation of the circuit breaker shall require dismantling of the device or the breaking of a seal.

Any means for sealing shall be such that breaking or removing the seal shall be plainly evident.

NEMA Standard 11-20-1986.

3.3.3.1 Access to Inverse Time Calibration Settings

It shall be permitted to make provisions for an external adjustment, providing this adjustment is plainly marked and only changes the rating to a percentage below the current rating marked on the circuit breaker.

NEMA Standard 11-20-1986.

3.3.3.2 Access to Instantaneous Trip Setting

It shall be permitted to make provisions for an external instantaneous trip adjustment, providing this adjustment is plainly marked.

NEMA Standard 11-20-1986.

3.4 SPACINGS

Spacings, including clearances and creepage distances, shall be as given in Section 12.

NEMA Standard 11-20-1986.

3.5 TERMINALS

Terminal connections shall be such that the conductors shall be connected with screws or other equivalent means so as to assure that the necessary clamping pressure is maintained.

Terminals shall be designed to clamp all strands of the conductor between metal surfaces without breaking strands of the conductor.

Terminals shall not allow the conductors to be displaced, or be displaced themselves, in a manner detrimental to the operation or the insulation (by reducing clearances, creepage distances, or both).

NEMA Standard 11-20-1986.

Copyright National Electrical Manufacturers Association
Provided by IHS under license with NEMA
No reproduction or networking permitted without license from IHS
Not for Resale

Section 4

PERFORMANCE REQUIREMENTS AND VERIFICATION TESTS

4.1 GENERAL

Design verification tests shall be made to determine the adequacy of the design of a particular type, style, or model of molded case circuit breaker to meet its assigned ratings and to operate satisfactorily under normal service application conditions or under special conditions if specified.

Those circuit breakers which are to be tested shall be representative of production.

Samples shall be in new condition at the start of the tests. No maintenance or conditioning of the circuit breaker shall take place during or between the tests, except as specifically permitted by the test description.

All samples shall meet the criteria of each individual test and shall be mechanically and electrically functional at the conclusion of each test sequence.

Each test sequence shall be conducted on a single circuit breaker or sets of circuit breakers.

Two single pole circuit breakers and the poles of a two-pole circuit breaker, so constructed that either pole may trip independently of the other and rated 120/240 volts AC or 125/250 volts DC, shall be tested together in the overload and dielectric tests in test sequence "X"; the endurance, interrupting ability and dielectric tests in test sequence "Y"; and the interrupting ability and dielectric tests in test sequence "Z." Two such pairs of poles shall constitute a circuit breaker set.

Unless otherwise specified, design verification tests shall be conducted on samples having the maximum and minimum ampere ratings furnished in a frame size.

Where a tolerance is not specified, design performance tests shall be made at values not less severe than the specified values.

As a minimum, all breakers must be tested in accordance with the sequences described in 4.2 which will result in interruption ratings at the values detailed in the sequence. For interruption ratings at higher levels, additional samples must be tested according to 4.3.

NEMA Standard 11-20-1986.

4.1.1 Test Sample Selection

The number of sets of samples to be tested shall be determined by the frame size of the circuit breaker and type of overcurrent release as given in Table 4-1.

Circuit breakers equipped with electronic overcurrent releases which are fixed shall be tested as non-interchangeable trip circuit breakers. If the electronic overcurrent release is interchangeable, sample selection and tests shall follow the interchangeable schedule.

NEMA Standard 11-20-1986.

Copyright National Electrical Manufacturers Association
Provided by IHS under license with NEMA
No reproduction or networking permitted without license from IHS
Not for Resale

Table 4-1
SETS OF SAMPLES FOR TEST SEQUENCES

Ampere Rating of Frame	Overcurrent Release Type	Samples per Set Subjected to the Inverse Time Delay Tests, Clause 4.2.2.4	The Sets of Samples to all Remaining Tests in Each Test Sequence[1]
0-225	Non-interchangeable	3 (4 if 1 pole rated 120/240V)	3 or 4
	Interchangeable	3 frames, 3 trip units	3 frames, 3 trip units
226-400	Non-interchangeable	3 circuit breakers	The 2 with shortest tripping times at 135 percent rated current
	Interchangeable	2 frames, 3 trip units	The 2 frames and the 2 trip units with the shortest tripping times at 135 percent rated current
401-1600	Non-interchangeable	3 circuit breakers	The 1 with the shortest tripping time at 135 percent rated current
	Interchangeable	1 frame, 3 trip units	The 1 frame and the 1 trip unit with the shortest trip time at 135 percent rated current
1601 and higher	Non-interchangeable	1 circuit breaker	The 1 circuit breaker
	Interchangeable	1 frame, 1 trip unit	The 1 frame and the 1 trip unit

[1]If a circuit breaker is not marked "line" and "load," one sample of each set is to be tested with reversed line and load connections or an additional sample of each test set shall be provided. When only one sample constitutes a test set, a second sample is required for the reversed line-load connection tests.

Copyright National Electrical Manufacturers Association
Provided by IHS under license with NEMA
No reproduction or networking permitted without license from IHS
Not for Resale

4.2 STANDARD DESIGN VERIFICATION TESTS

4.2.1 Sequences of Tests

The design performance of circuit breakers shall be verified by conducting a series of tests on sets of circuit breakers (see 4.2.1.1 and 4.2.1.2) in the following sequences:

Test Sequence "X"	*Clause*
a. Verification of overcurrent release calibration, operating limits and characteristics	4.2.2 (see NOTE I)
b. Overload performance	4.2.3
c. Temperature rise test	4.2.4
d. Dielectric Withstand	4.2.9
Test Sequence "Y"	
a. Verification of overcurrent release calibration, operating limits and characteristics	4.2.2
b. Mechanical and electrical endurance	4.2.5
c. Reverification of overcurrent release calibration	4.2.6
d. Interrupting ability test	4.2.7
e. Reverification of overcurrent release calibration	4.2.8
f. Dielectric test	4.2.9
Test Sequence "Z"	
a. Verification of overcurrent release calibration, operating limits, and characteristics	4.2.2 (see NOTE I)
b. Interrupting ability test	4.2.7
c. Reverification of overcurrent release calibration	4.2.8
d. Dielectric test	4.2.9

NOTE I: At the option of the manufacturer, tests per 4.2.2.2 and 4.2.2.3 shall be permitted to be omitted in test sequences X and Z.

NEMA Standard 11-20-1986.

4.2.1.1 The manufacturer shall be permitted to combine test sequences for all frame sizes.

NEMA Standard 11-20-1986.

4.2.1.2 When X, Y, and Z are combined, or when Y and Z are combined, omission of the interrupting ability tests in sequence Y shall be permitted.

NEMA Standard 11-20-1986.

4.2.2 Verification of Overcurrent Release Calibration, Operating Limits and Characteristics

4.2.2.1 GENERAL

The ambient air temperature shall be measured in the same manner as for the temperature rise tests (see 4.2.4.3.2.).

The circuit breaker shall be mounted in open air or mounted in the smallest enclosure in which it is intended to be used without the cover in place. It shall be protected against external heating or cooling. Overcurrent releases shall be installed as in normal use.

The circuit breaker shall be connected with conductor sizes or cross sections chosen as a function of the marked current rating of the circuit breaker in accordance with Tables 4-6 and 4-7.

Connecting conductors shall be of commercially available copper and of the same lengths as for the temperature rise test (see 4.2.4.2.2).

Tests shall be made at any voltage equal to or less than the rated voltage using alternating current at the rated frequency for breakers rated for use with alternating current or both alternating and direct current; use direct current for breakers rated for direct current only.

NEMA Standard 11-20-1986.

4.2.2.2 VERIFICATION OF INSTANTANEOUS TRIP SETTING

The operation of an adjustable overcurrent release intended for protection against short circuits and overloads shall be verified at the maximum and the minimum current setting of the release. The test current shall have no asymmetry.

With the release adjusted to its maximum instantaneous setting, the release shall not operate at a test current having a value less than 80 percent of the current setting and shall operate at a test current having a value of 120 percent of the current setting.

With the release adjusted to its minimum setting, the release shall not operate at a test current having a value less than 75 percent of the current setting and shall operate at a test current having a value of 125 percent of the current setting.

The operation of multipole releases shall be verified by testing each pole individually.

NEMA Standard 11-20-1986.

4.2.2.3 VERIFICATION OF SHORT-TIME-DELAY TRIP SETTING

This test shall be conducted at an ambient air temperature of +25 °C ±3 °C.

The operation of short or definite time-delay overcurrent opening releases shall be verified at 90 percent and 125 percent of the overcurrent setting of the release.

Copyright National Electrical Manufacturers Association
Provided by IHS under license with NEMA
No reproduction or networking permitted without license from IHS

Not for Resale

The test current shall have no asymmetry. At a test current having a value equal to 90 percent of the overcurrent setting, the release shall not operate; at a test current having a value equal to 125 percent of the overcurrent setting, the tripping time shall be less than or equal to the maximum value stated by the manufacturer.

NEMA Standard 11-20-1986.

4.2.2.4 VERIFICATION OF INVERSE-TIME-DELAY CHARACTERISTICS

The operating characteristics of inverse-time-delay overcurrent releases shall be verified in accordance with the performance requirements of this section.

NEMA Standard 11-20-1986.

4.2.2.4.1 200 PERCENT TRIPPING TIME

This test shall be conducted at an ambient air temperature of +25 °C ±3 °C.

At a current value of 200 percent of the marked current rating of the circuit breaker a test shall be made to verify that the time current characteristics of the overcurrent opening release conforms to the tripping times shown in Table 4-2. Each pole of a multipole circuit breaker shall be tested separately. Each test shall be started with the breaker at ambient temperature.

NEMA Standard 11-20-1986.

Table 4-2
AUTOMATIC TRIPPING TIME
200 PERCENT OF THE MARKED CURRENT RATING

Current in Amperes	Maximum Time to Trip in Minutes
0–30	2*
31–50	4
51–100	6
101–150	8
151–225	10
226–400	12
401–600	14
601–800	18
801–1000	20
1001–1200	24
1201–1600	26
1601–2000	28
Over 2000	30

*For circuit breakers rated more than 250V, the maximum tripping time shall be permitted to be 3 minutes. (Note approved as NEMA Standard 1-9-1989.)

Copyright National Electrical Manufacturers Association
Provided by IHS under license with NEMA
No reproduction or networking permitted without license from IHS
Not for Resale

4.2.2.4.2 INVERSE-TIME-DELAY OPERATION

Referring to Table 4-3, with the circuit breaker at reference ambient temperature and the main circuit of all poles carrying (A) percent of the marked current rating of the circuit breaker, the circuit breaker shall not trip within time (T). At the end of time (T) the value of the current shall be raised immediately to (B) percent of the marked current rating of the circuit breaker and tripping shall occur less than time (T) later.

NEMA Standard 11-20-1986.

Table 4-3
INVERSE TIME DELAY OPERATIONS

Release	Marked Current Rating of the Circuit Breaker I_n (in Amperes)	A Percent	B Percent	T Hours	Ref. Ambient Air Temperature
Not compensated for ambient air temperature	$I_n \leq 50$	100	135	1	25 °C
	$I_n > 50$	100	135	2	
Compensated for ambient air temperature	$I_n \leq 50$	100	135	1	+25 °C
		100	135	1	+40 °C
	$I_n > 50$	100	135	2	+25 °C
		100	135	2	+40 °C

4.2.3 Overload Performance

4.2.3.1 REQUIREMENTS

The circuit breaker shall be capable of performing the number of operating cycles at the test currents as specified in Table 4-4 under test conditions defined in 4.2.3.2 through 4.2.3.4.

Each operating cycle shall consist of a making operation followed by a breaking operation.

There shall be no electrical or mechanical breakdown of the circuit breaker or melting of the copper fuse wire during the test.

NEMA Standard 11-20-1986.

Copyright National Electrical Manufacturers Association
Provided by IHS under license with NEMA
No reproduction or networking permitted without license from IHS
Not for Resale

Table 4-4
OVERLOAD PERFORMANCE—TEST CURRENTS AND NUMBER OF OPERATING CYCLES

Frame Size in Amperes	Close and Open Manually*	Close Manually, Open Automatically*	Total No. of Operating Cycles
≤ 100	35	15	50 at $6I_n$**
101–1600	50	0	50 at $6I_n$
1601–2500	25	0	25 at $6I_n$
2501–UP	28	0	3 at $6I_n$ 25 at $2I_n$

*All multipole breakers without common trip regardless of ampere rating shall receive 35 manual and 15 automatic operations.

**The minimum current shall be 150 amperes unless the circuit breaker's inherent impedance will not allow 150 amperes at rated voltage. In this case, the maximum current passed at rated voltage shall be used.

NEMA Standard 11-20-1986.

4.2.3.2 MOUNTING AND CONNECTIONS

4.2.3.2.1 MOUNTING

The breaker shall be mounted as intended for general use in an enclosure or cubical constructed in accordance with the requirements of 9.2.2 and with the same dimensions as the smallest enclosure in which it is intended to be used.

NEMA Standard 11-20-1986.

4.2.3.2.2 CONNECTIONS

Overload test connections shall be made as shown in Figure 4-1.

When diagrams B and C (Figure 4-1) are employed, the manual operation shall be performed with the breaker connected as shown in diagram B, and the automatic opening operations shall be performed with the breaker connected as shown in Diagram C.

All conductors of an alternating current circuit shall either pass through the same opening, or all line conductors shall pass through one opening and all load conductors shall pass through the other opening.

Where parallel conductors are used, more than one opening shall be permitted to be used, provided that an equal number of conductors from each phase and from the same line or load side are routed through each opening.

The necessary impedance shall be located on the load side of the circuit breaker.

The enclosure shall be connected to the mid-point or neutral of the supply or to one phase of an ungrounded system through an uninsulated No. 20 AWG (0.8 mm diameter) copper fuse wire 250 + 12 mm (10 + ½ inch) in length. The conductors connecting the fuse wire to the enclosure and supply shall be number 10 AWG (2.6 mm diameter) copper fuse wire totaling no more than 2 meters (79 inches) in length.

Tests on a DC rated circuit breaker shall be made with direct current, and with the device connected so that the enclosure will be positive in potential with respect to the nearest arcing point.

NEMA Standard 11-20-1986.

4.2.3.3 PERFORMANCE OF THE TEST

4.2.3.3.1 RATE OF OPERATION

The operating rate shall be the same as for the mechanical endurance test (see Table 4-11, Clause 4.2.5.1). If the circuit breaker does not relatch at the specified operating rate, this rate shall be permitted to be reduced sufficiently so that the circuit breaker will relatch. Circuit breakers rated above 100 amperes shall be permitted to have the overload operations conducted in groups of 5 with a maximum of 15 minutes between groups.

Circuit breakers rated above 2500 amperes shall receive three operations at 600 percent of rating at the rate of one cycle per minute followed by 25 operations at 200 percent of the rating at the rate of one cycle per minute.

NEMA Standard 11-20-1986.

Copyright National Electrical Manufacturers Association
Provided by IHS under license with NEMA
No reproduction or networking permitted without license from IHS
Not for Resale

4.2.3.3.2 INSTANTANEOUS TRIP SETTING

The adjustable instantaneous trip setting normally shall be set at the maximum position. For circuit breakers rated 400 amperes or more the adjustable instantaneous trip shall be permitted to be adjusted to less than the maximum position at the option of the manufacturer.

NEMA Standard 11-20-1986.

4.2.3.3.3 OPTIONAL OVERLOAD PERFORMANCE TEST

Common trip type circuit breakers intended for use on direct current or a single phase alternating current three-wire system with grounded neutral shall be permitted to be tested in the same manner as described for breakers to be connected per diagrams B and C of Figure 4-1 at the option of the manufacturer.

NEMA Standard 11-20-1986.

4.2.3.4 ELECTRICAL QUANTITIES AND CIRCUIT CHARACTERISTICS

The values of the electrical quantities and characteristics of the circuit, including all connections to the circuit breaker shall be as stated in Table 4-5.

NEMA Standard 11-20-1986.

Table 4-5
OVERLOAD TEST CIRCUIT CHARACTERISTICS

Rating	AC	DC
Current	See Table 4-4	See Table 4-4
Voltage (open circuit)	$1.0\ U_{e-0}^{+0.05}$	$1.0\ U_{e-0}^{+0.5}$
Power Factor cos Ø	$0.5\ {}_{-0.05}^{+0.0*}$	. . .
Frequency	45–62 Hz	. . .
Time Constant L/R (ms)	. . .	≥3.0 ms

*When breakers are tested per diagram C of Figure 4-1, the power factor shall be .75–.80.

Copyright National Electrical Manufacturers Association
Provided by IHS under license with NEMA
No reproduction or networking permitted without license from IHS
Not for Resale

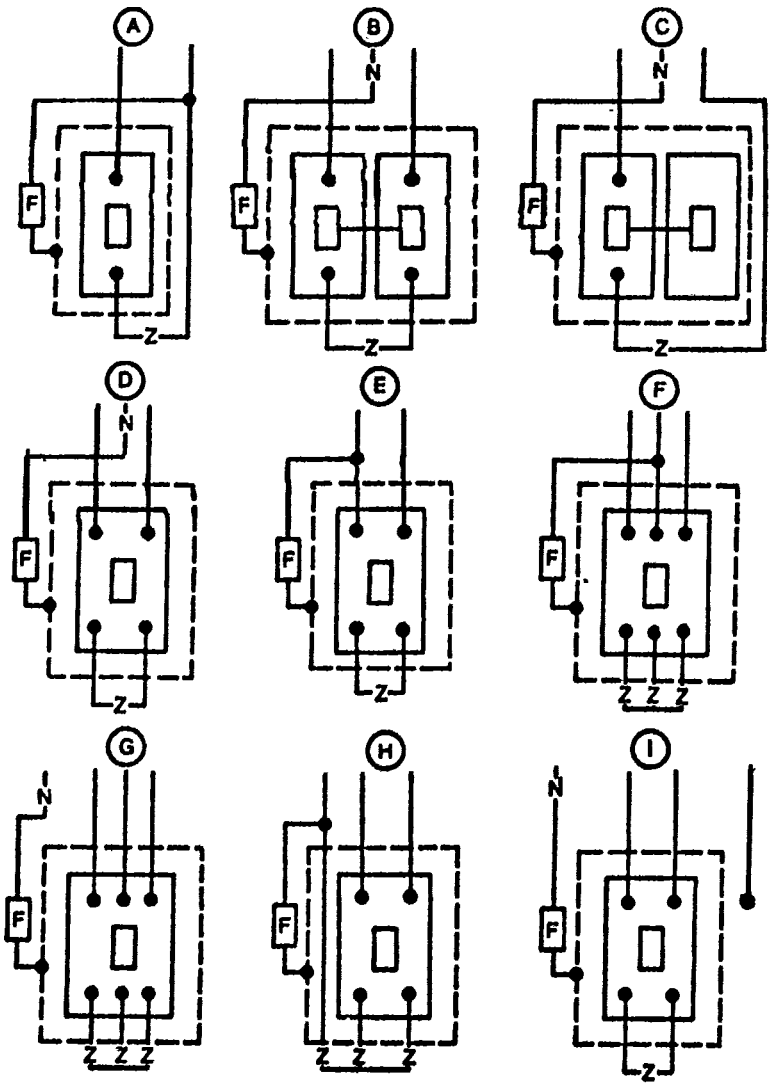

(A) 1-Pole
(B) and (C) 1-Pole "Tested in Pairs" (also represents 2-Pole independent trip types)
(D) 2-Pole Common Trip for 3 Wire Grounded Conductor Rating (120/240V, 125/250V)
(E) 2-Pole Common Trip (other than [D,H,I])
(F) 3-Pole
(G) 3-Pole 480Y/277 Volt Rating
(H) 2-Pole Common Trip for 3-Phase (Delta) Rating
(I) 2-Pole Common Trip (Y Rating 3 Ø 4 Wire System)
(N) Neutral
(Z) Load Impedance
(F) Fuse Wire
----Enclosure

Figure 4-1
OVERLOAD TEST CONNECTION DIAGRAMS

Copyright National Electrical Manufacturers Association
Provided by IHS under license with NEMA
No reproduction or networking permitted without license from IHS
Not for Resale

The resistance and reactance of the test circuit shall be adjustable to satisfy the specified test conditions. The reactors shall be air-cored. They shall always be connected in series with the resistors, and their value shall be obtained by series coupling of individual reactors; parallel connecting of reactors is permitted when these reactors have essentially the same time-constant.

The air-core reactor in any phase shall be permitted to be shunted by a resistor in which the loss is approximately one percent of the total power consumption in that phase.

The resistance per phase shall be determined as follows:

	Shunt Resistance Per Phase, Ohms	
	Power Factor 0.45–0.50	Power Factor 0.75–0.80
Single Phase	$\frac{163\ E}{I}$	$\frac{52\ E}{I}$
Three Phase	$\frac{94\ E}{I}$	$\frac{30\ E}{I}$

Where—
E—line potential in volts.
I—line current in amperes

There shall be one and only one point of the test circuit which is directly grounded; this shall be permitted to be the short circuit link of the test circuit or the neutral point of the supply.

The current capacity of the supply circuit shall be such that the closed circuit voltage across the circuit breaker and the load, with 600 percent of the rated current of the circuit breaker flowing, is within 15 percent of the rated voltage of the circuit breaker. Alternatively, the current capacity of the supply circuit shall be adequate if that supply circuit fulfills requirements for the limited fault current making and breaking test, 4.2.7, or meets requirements for power frequency recovery voltage, 4.2.7.4.4, when the circuit is opened after carrying a current equal to the overload test value.

NEMA Standard 11-20-1986.

4.2.3.4.1 CALIBRATION OF TEST CIRCUIT

The test circuit shall be calibrated with both the line and load side conductors included in the circuit. The test circuit shall not include the circuit breaker to be tested.

Circuit characteristics shall be determined using laboratory-type meters, except when high current conditions require determination by oscillographic means as described in Section 11.

NEMA Standard 11-20-1986.

4.2.4 Temperature Rise

4.2.4.1 REQUIREMENTS

The main circuit of the circuit breaker, with all poles energized, shall carry the maximum rated current (I_n) for the frame, without tripping, until all temperatures have stabilized.

At the end of the test, the temperature rise of the different parts of the main circuit, the overcurrent releases, the wire terminals (at the point at which the insulation of the wire is terminated as in actual service), the surfaces subject to contact during normal operation, and the coils and bus bar extensions shall not exceed the limits specified in Tables 4-8, 4-9, and 4-10.

The test shall be conducted with the circuit breaker equipped with the overcurrent release for the maximum current rating of the frame.

Tripping coils intended to be energized continuously shall be energized at rated voltage or current and frequency (or DC).

NEMA Standard 11-20-1986.

4.2.4.2 MOUNTING AND CONNECTIONS

4.2.4.2.1 MOUNTING

Without Enclosure

The circuit breaker shall be mounted in open air in a closed room substantially free from air currents and external radiation.

In An Enclosure

The circuit breaker shall be mounted in an enclosure in accordance with 4.2.3.2.1.

Circuit breaker enclosures for circuit breakers rated 400 amps or more shall be permitted to employ ventilating openings.

NEMA Standard 11-20-1986.

4.2.4.2.2 CONNECTIONS

a. *Circuit Breakers Which Have Wiring Terminals*
Connections shall be black type RH, TW, THW, THHN, or THWN copper wire with cross-sectional areas corresponding to the marked ampere rating of the breaker as given in Tables 4-6 and 4-7.

Connections shall be in free air and spaced not less than the distance existing between terminals. The minimum length of each connecting wire shall be 1.2 meters (4 feet).

Connections made to circuit breakers with integral or separable parts extending from the housing shall be made in accordance with Tables 4-6 and 4-7.

Copyright National Electrical Manufacturers Association
Provided by IHS under license with NEMA
No reproduction or networking permitted without license from IHS
Not for Resale

b. *Circuit Breakers Rated More Than 1600 Amperes Connected With Bus Bars*
The bus bars shall be copper of the sizes stated in Table 4-7.

The connections shall be in free air and spaced not less than the distance existing between terminals.

The spacing between multiple bus bars shall be 6.35 mm (¼ inch) at the terminals of the circuit breakers as necessary.

The minimum length of each connecting bus bar per terminal shall be 1.2 meters (4 feet).

c. *Circuit Breakers Rated Less Than 1600 Amperes Having No Provision for Wire Connection*
The connections shall be made of copper bus bars with cross sections of 1.55 amperes/mm² (1000 amperes per square inch) based on the circuit breaker frame size unless the breaker is intended for use with smaller bus bars, in which case the smaller bus bar shall be used.

The length of the bus bars shall not exceed 152.4 mm (6 inches).

The bus bars shall terminate in one or more pressure wire connectors.

The wire connectors shall be wired in accordance with 4.2.4.2.2a except that the combined length of wire and bus bar shall be 1.2 meters (4 feet).

d. *Circuit Breakers With Specially Formed Plug-In Terminals*
The circuit breaker shall be tested with mating parts of the smallest size and configuration with which the breaker is to be used.

The receiving device mating parts, mounted as in actual service, shall terminate in one or more pressure wire connectors.

The wire connectors shall be wired in accordance with 4.2.4.2.2a.

NEMA Standard 11-20-1986.

4.2.4.3 Temperature Measurements

4.2.4.3.1 Thermocouples

Thermocouples to be used to determine temperatures shall consist of no larger than No. 24 AWG wires. Referee temperature measurements shall be made using No. 30 iron and constantan AWG thermocouple wires. Readings shall be taken using a potentiometer type indicating instrument.

NEMA Standard 11-20-1986.

4.2.4.3.2 Ambient Air Temperature

The ambient air temperature shall be measured during the last quarter of the test period by means of at least two thermometers or thermocouples equally placed on either side of the circuit breaker at about half its height and at a distance of 30.5 cm (12 inches) from the circuit breaker or circuit breaker enclosure. The thermometers or thermocouples and the circuit breaker and its connecting conductors shall be protected against air currents and heat radiations. The ambient air temperature during the temperature rise test shall be at the ambient temperature rating of the circuit breaker and shall not vary more than 3 °C.

NEMA Standard 11-20-1986.

4.2.4.3.3 Measurement of the Temperature of Parts

For conductors other than windings, the temperature of the different parts shall be measured by means of thermocouples placed at the nearest accessible position to the hottest accessible spot.

When wiring terminals are not provided on the circuit breaker, thermocouples shall be attached at line and load terminals at points as shown in Figures 4-2 A, B, C, and D.

NEMA Standard 11-20-1986.

4.2.4.3.4 Temperature Rise of a Part

The temperature rise of a part shall be the difference between the temperature of the part, measured in accordance with 4.2.4.3.3 and the ambient air temperature measured in accordance with 4.2.4.3.2.

NEMA Standard 11-20-1986.

4.2.4.3.5 Measurement of the Temperature of Coils

For measurement of the temperature of coils, the method of measuring the temperature by resistance variation shall be used. Other methods shall be permitted only if it is impracticable to use the resistance method.

The temperature of the windings, as measured by a thermocouple before beginning the test, shall not differ from that of the surrounding medium (air, oil, and such) by more than 3 °C.

For copper conductors, the value of the hot temperature (T_2) shall be obtained from the value of the cold temperature (T_1) as a function of the ratio of the hot resistance (R_2) to the cold resistance (R_1) by the following formula:

$$T_2 = \frac{R_2}{R_1} (T_1 + 234.5) - 234.5$$

where T_1 and T_2 are expressed in Celsius degrees

The value of R_2 shall be determined by taking several resistance measurements at short intervals, beginning immediately after shutdown. A curve of the resistance values vs. time shall be plotted and extrapolated to give the value of R_2 at shutdown.

NEMA Standard 11-20-1986.

Copyright National Electrical Manufacturers Association
Provided by IHS under license with NEMA
No reproduction or networking permitted without license from IHS

Not for Resale

4.2.4.4 TEST METHODS

4.2.4.4.1 TEMPERATURE-RISE TEST OF THE MAIN CIRCUIT

The circuit breaker shall be mounted and connected in accordance with 4.2.4.2.

With all poles carrying 100 percent of the marked current rating (I_n) of the circuit breaker, the test shall continue until three successive readings of the temperature rises over ambient, taken at not less than 10- nor more than 20-minute intervals, indicate that stable conditions have been reached.

NEMA Standard 11-20-1986.

4.2.4.4.2 ALTERNATE TEMPERATURE-RISE TEST OF CIRCUIT BREAKERS

If circuit breakers in accordance with 4.2.4.4.1 develop temperature rises exceeding 50 °C (but no more than 65 °C) at the main circuit terminals for external connections or at the test points specified in Figure 4-2, the temperature test shall be permitted to be repeated using a new untested sample installed in an enclosure according to 4.2.4.2.1 and connected according to the requirements of 4.2.4.2.2.

With the circuit breaker carrying 80 percent of its maximum rated current, the temperature rise at the main circuit terminals for external connections or at the test points specified in Figure 4-2 shall not exceed 50 °C.

NEMA Standard 11-20-1986.

4.2.4.4.3 TEMPERATURE-RISE TEST OF CIRCUIT BREAKERS RATED 250 AMPERES OR MORE AND INTENDED TO BE APPLIED AT 100 PERCENT OF MARKED CURRENT RATING

Tests shall be made with the circuit breaker mounted in the same enclosure or an equivalent to the one used for the overload test (see 4.2.3.2.1). The enclosure shall be permitted to contain ventilation openings. (see 9.1).

The circuit breaker shall be connected in accordance with 4.2.4.2.2.

Copyright National Electrical Manufacturers Association
Provided by IHS under license with NEMA
No reproduction or networking permitted without license from IHS
Not for Resale

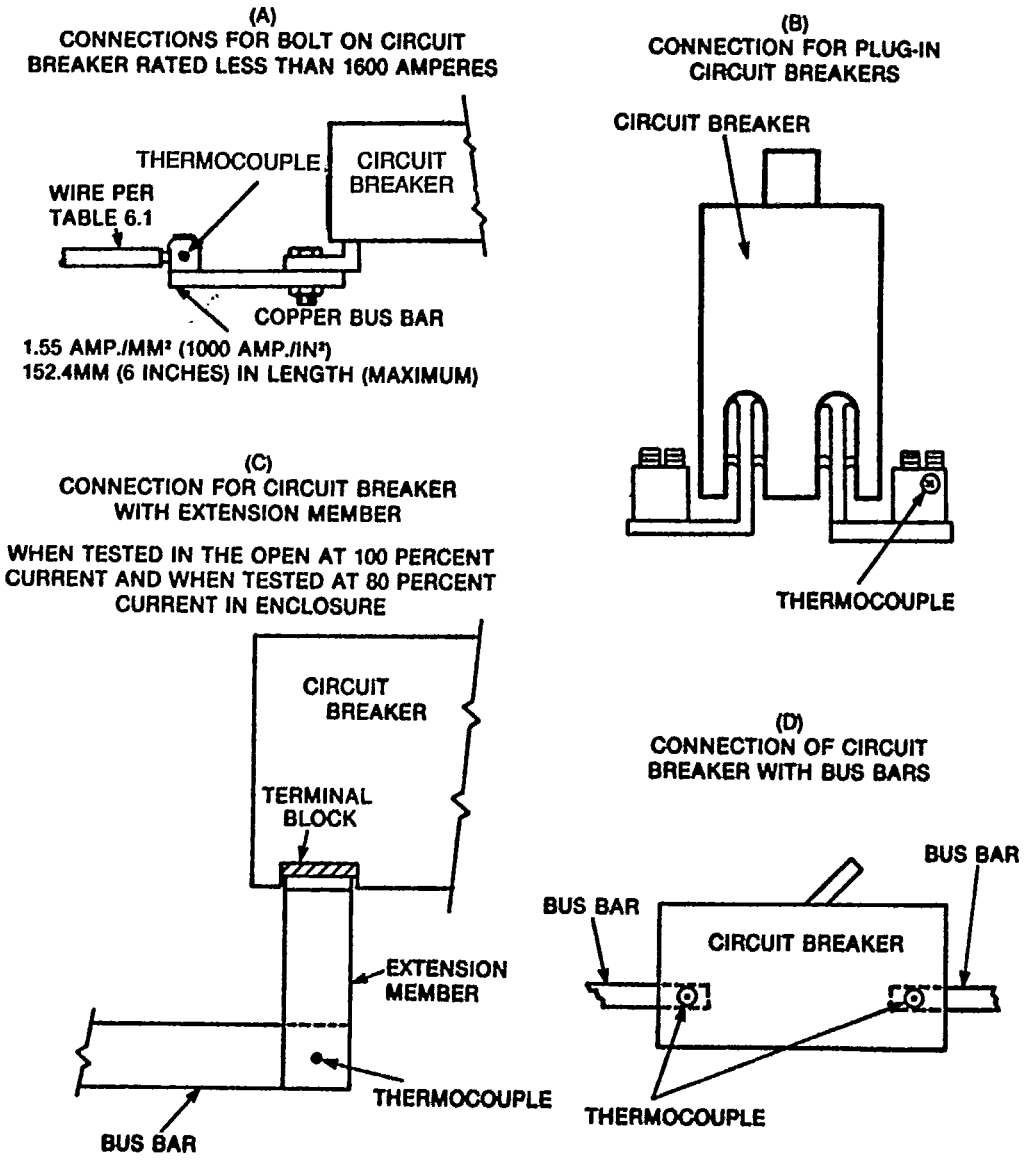

Figure 4-2
CIRCUIT BREAKER CONNECTIONS

Copyright National Electrical Manufacturers Association
Provided by IHS under license with NEMA
No reproduction or networking permitted without license from IHS
Not for Resale

With all poles carrying 100 percent of the marked current rating of the circuit breaker, the test shall continue until three successive readings of the temperature rises over ambient taken at not less than 10- nor more than 20-minute intervals indicate that stable conditions have been reached.

At the end of the test, temperatures of the insulating materials used in the circuit breaker shall not exceed the values specified in Tables 4-8 and 4-9. Temperature rises shall not exceed 60 °C where connections are made to external bus bars, or on wiring terminals at a point to which the insulation of a wire is brought up as in actual service. If temperature rises on wiring terminals exceed 50 °C, the manufacturer shall specify that wire rated 90 °C sized per Tables 4-6 and 4-7 must be used.

NEMA Standard 11-20-1986.

4.2.4.5 TEST CIRCUIT

Tests shall be permitted to be made at any convenient voltage. Tests on DC rated circuit breakers shall be permitted to be made with an AC supply for convenience of testing. Tests on AC rated circuit breakers shall be made at a frequency of between 45 and 62 Hz.

In the case of multipole circuit breakers tested with AC, the test shall be permitted to be carried out with either single- or three-phase current.

NEMA Standard 11-20-1986.

Table 4-6
MARKED RATED CURRENT AND CONDUCTOR SIZE*

Marked Rated Current in Amperes	Copper Size	
	60 °C	75 °C
15 or less	14 AWG	14 AWG
20	12	12
25	10	10
30	10	10
40	8	8
50	6	8
60	4	6
70	4	4
80	3	4
90	2	3
100	1	3
110	1	2
125	1/0	1
150	. . .	1/0
175	. . .	2/0
200	. . .	3/0
225	. . .	250 MCM
275	. . .	300
300	. . .	350
325	. . .	400
350	. . .	500
400	. . .	3/0 AWG (TWO)

*For breakers rated 125 amperes or less: calibration, temperature rise, and short circuit tests shall be run with the conductor size corresponding to the conductor temperature rating marked on the breaker. If the circuit breaker is marked for use with 60 °C and 75 °C conductors, the conductors used shall provide the more adverse conditions during the test, i.e., 75 °C conductors for the temperature-rise test, 60 °C conductors for the interrupting ability test, both size conductors for calibration unless the most adverse one can be clearly determined.

Copyright National Electrical Manufacturers Association
Provided by IHS under license with NEMA
No reproduction or networking permitted without license from IHS
Not for Resale

Table 4-7
COPPER CONDUCTORS FOR TESTS WITH MARKED RATED CURRENT HIGHER THAN 400A

Value of Current in Amperes	Range of Current in Amperes	Size of Conductor			
		Cable		Bar	
		Number	Size	Number	Size Inches (mm)
450	401–450	2	4/0 AWG	1	¼ × 1½
500	450–500	2	250 MCM		(6.35 × 38.1)
550	500–550	2	300 MCM	1	¼ × 2
600	550–600	2	350 MCM		(6.35 × 50.8)
700	600–700	2	500 MCM		
800	700–800	3	300 MCM	1	¼ × 3
1000	800–1000	3	400 MCM		(6.35 × 76.2)
1200	1000–1200	3	600 MCM		
		4	350 MCM		
1400	1200–1400	4	500 MCM	2	¼ × 3
1600	1400–1600	5	400 MCM		(6.35 × 76.2)
		4	600 MCM		
2000	1600–2000	6	400 MCM	2	¼ × 4
		5	600 MCM		(6.35 × 101.6)
2500	2000–2500	8	400 MCM	2	¼ × 5
					(6.35 × 127)
		7	500 MCM	4*	¼ × 2½
		6	600 MCM		(6.35 × 63.5)
3000	2500–3000	9	400 MCM	4*	¼ × 4
		8	500 MCM		(6.35 × 101.6) 7
		7	600 MCM		
4000	3000–4000	12	400 MCM	4*	¼ × 5
		11	500 MCM		(6.35 × 127)
		10	600 MCM		

*Where four bars are used, they shall be in two sets of two bars with not more than 4 inches (101.6 mm) between pair centers.

Copyright National Electrical Manufacturers Association
Provided by IHS under license with NEMA
No reproduction or networking permitted without license from IHS
Not for Resale

Table 4-8
MAXIMUM TEMPERATURE RISE ON COILS

	Wire Wound Coils		Temperature Rise, Single-Layer Series Coils With Exposed Surface Uninsulated or Enameled	
	°C	°F	°C	°F
1. Class 105 Insulation				
Thermocouple method	65	117	90	162
Resistance method	85	153	. . .	. .
2. Class 130 insulation				
Thermocouple method	85	153	. . .	. . .
Resistance method	105	189	. . .	. . .
3. Temperature index "over 220" insulation	No limit specified		. . .	. . .

Table 4-9
MAXIMUM TEMPERATURE LIMITS FOR INSULATING MATERIALS

Material	Maximum Temperature
Thermoplastic-insulated conductors*	60°C
Conductors having varnished cloth insulation	85°C
Fiber employed as electrical insulation	90°C
Wood or other combustible material	90°C
Urea composition*	100°C
Glass polyester*	105°C
Melamine	150°C
Phenolic composition employed as electrical insulation*	150°C
The softening point of any sealing compound minus 15°C	

*This limitation shall not apply to a material or compound which has been found by investigation to have adequate heat-resistant properties for higher temperature.

Copyright National Electrical Manufacturers Association
Provided by IHS under license with NEMA
No reproduction or networking permitted without license from IHS
Not for Resale

Table 4-10
TEMPERATURE-RISE LIMITS FOR THE VARIOUS MATERIALS AND PARTS

Type of Material—Description of Parts	Temperature-Rise Limit (Measured by Thermocouple)
Contact parts in air (main, control, and auxiliary contacts):	
a. copper	45°C
b. silver or silver-faced	(1)
c. all other metals or sintered metals	(2)
Bare conductors including non-insulated coils	(1)
Metallic parts acting as springs	(3)
Metallic parts in contact with insulating materials	(4)
Main operating means:	
a. parts of metal	35°C (5)
b. parts of insulating material	60°C (5)
Main circuit terminals for external connections	50°C

(1) Limited solely by the necessity of not causing any damage to adjacent parts.
(2) To be specified according to the properties of the metals used and limited by the necessity of not causing any damage to adjacent parts.
(3) The resulting temperature shall not reach a value such that the elasticity of the material is impaired. For pure copper, this implies a total temperature not exceeding 75°C.
(4) Limited solely by the necessity of not causing any damage to insulating materials.
(5) Temperature rise based on 25°C ambient.

4.2.5 Verification of Mechanical and Electrical Endurance

4.2.5.1 REQUIREMENTS

The circuit breaker shall be capable of completing the number of operating cycles shown in Table 4-11.

a. For the test of mechanical endurance, without current in the main circuit under the test conditions specified in 4.2.5.3.1.
b. For the test of electrical endurance, with current in the main circuit under the test conditions specified in 4.2.5.3.2.

Each operating cycle shall consist of either a closing operation followed by an opening operation (mechanical endurance test) or a making operation followed by a breaking operation (electrical endurance test).

The operating frequency and number of operating cycles shall be in accordance with Table 4-11.

Following the tests, all components of the circuit breaker shall be in operable condition and there shall be no electrical or mechanical breakdown of the circuit breaker. The fuse wire connected to indicate arc-over to the enclosure or grounded metal shall not be ruptured.

Copyright National Electrical Manufacturers Association
Provided by IHS under license with NEMA
No reproduction or networking permitted without license from IHS
Not for Resale

Table 4-11
ENDURANCE TEST OPERATIONS

Frame Size In Amperes	Number of Cycles of Operation Per Minute(3)	Number of Cycles of Operation		
		With Current(2)	Without Current(1)	Total
< 100	6	6,000	4,000	10,000
101–225	5	4,000(4)	4,000	8,000(4)
226–600	4	1,000	5,000	6,000
601–800	1	500	3,000	3,500
801–2500	1	500	2,000	2,500
2501–6000	1(5)	400	1,100	1,500

(1) The number of operating cycles per hour shall be permitted to be increased for the "without current" operations at the discretion of the manufacturer.
(2) During each operating cycle, the circuit breaker shall remain closed for no longer than 2 seconds.
(3) For circuit breakers rated more than 800 amperes, the endurance test shall be permitted to be conducted in groups of 100 "with current" operations. "Without current" operations, shall be permitted to be conducted between groups of "with current" operations.
(4) For frame sizes through 150 amperes where tests are required on samples having ratings of 100 amperes or less and 250 volts or less, the number of operations shall be the same as for the 100 ampere frame.
(5) The rate of operation for Frames 3000 amperes and above shall be: 1 cycle per minute for the first 10 operations; thereafter, in groups of 5 (at 1 cycle per minute) with a time interval between groups, to prevent overheating of equipment.

4.2.5.2 General Test Conditions

The tests shall be made at the ambient temperature of the test room.

The order in which the tests are carried out shall be optional.

The circuit breaker shall be operated manually or by a machine designed for that purpose.

NEMA Standard 11-20-1986.

4.2.5.3 Tests

4.2.5.3.1 Mechanical Endurance Tests

The method of mounting the circuit breaker shall be left to the discretion of the manufacturer.

The tests shall be made under the conditions specified in 4.2.5.2.

The number and frequency of the operating cycles to be carried out shall be as specified in Table 4-11.

NEMA Standard 11-20-1986.

4.2.5.3.2 Electrical Endurance Tests

The circuit breaker shall be mounted as specified in 4.2.3.2 and connected per Figure 4-3.

The number and frequency of the operating cycles to be carried out shall be as specified in Table 4-11.

The circuit breaker shall be operated to make and to break its marked rated current at its rated operational voltage and with the circuit characteristics listed in 4.2.5.4.

NEMA Standard 11-20-1986.

4.2.5.4 Electrical Quantities and Circuit Characteristics

The current capacity of the circuit shall be such that with rated current flowing, the line voltage shall be 97.5 percent of rated voltage or greater.

NEMA Standard 11-20-1986.

Table 4-12
ENDURANCE TEST CIRCUIT CHARACTERISTICS

	AC	DC
Power Factor cos Ø	$0.8 \begin{smallmatrix}+0.0\\-0.1\end{smallmatrix}$	. . .
Time-constant L/R (ms)	. . .	≥2.5

ircuit breakers shall be made at a frequency betwe en 45 Hz and 62 Hz.

Copyright National Electrical Manufacturers Association
Provided by IHS under license with NEMA
No reproduction or networking permitted without license from IHS
Not for Resale

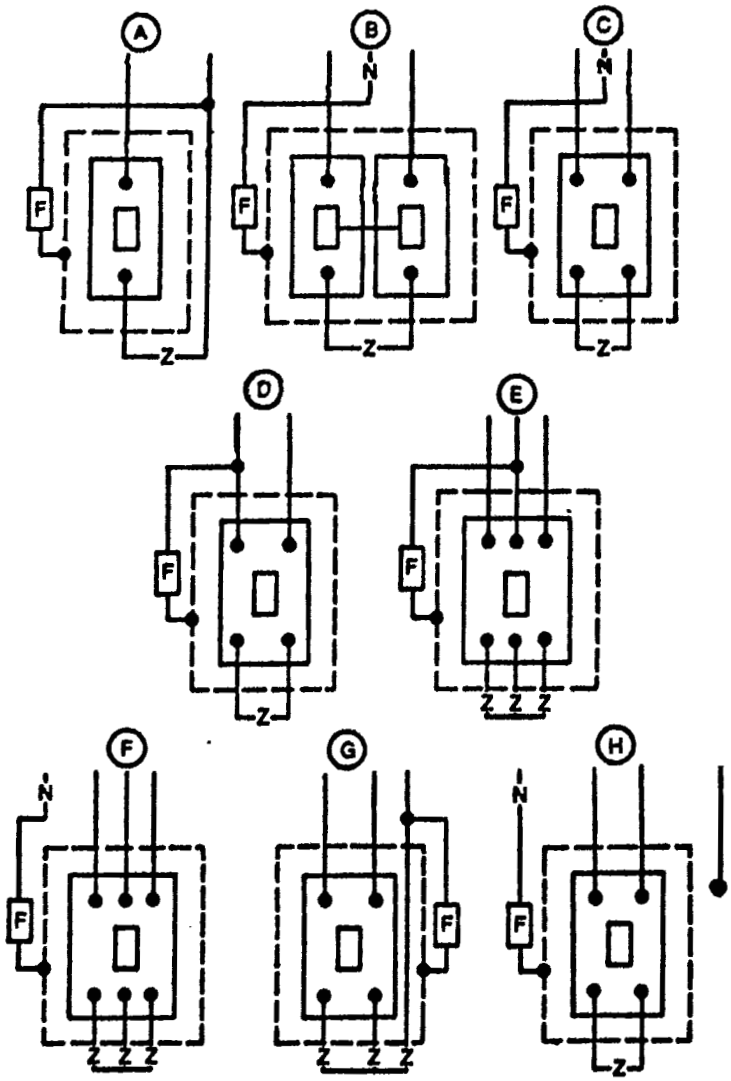

(A) 1-Pole
(B) 1-Pole "Tested in Pairs" (also represents 2-Pole independent-trip type)
(C) 2-Pole Common Trip for 3 Wire Grounded Conductor Rating (120/240V, 125/250V)
(D) 2-Pole Common Trip "other than C, G, and H"
(E) 3-Pole
(F) 3-Pole 480Y/277 Volt Rating
(G) 2-Pole Common Trip for 3-Phase (delta) Rating
(H) 2-Pole Common Trip (Y Rating 3 Ø 4 Wire)
(N) Neutral
(Z) Load Impedance Enclosure
[F] Fuse Wire

Figure 4-3
ENDURANCE TEST CONNECTION DIAGRAMS

Copyright National Electrical Manufacturers Association
Provided by IHS under license with NEMA
No reproduction or networking permitted without license from IHS
Not for Resale

4.2.5.4.1 Calibration of Test Circuit

The test circuit shall be calibrated following the same procedure as outlined in 4.2.3.4.1.

NEMA Standard 11-20-1986.

4.2.6 Re-verification of Inverse-Time-Delay Characteristics

4.2.6.1 General Test Condition

Test conditions shall be the same as specified in 4.2.2. The ambient temperature shall be +25 °C ± 3 °.

NEMA Standard 11-20-1986.

4.2.6.2 Verification of Over-Current Release Calibration

The tripping time of each pole shall be determined at 200 percent of the marked current rating of the circuit breaker following the procedure given in 4.2.2.4.1. In no case shall the tripping time exceed the values shown in Table 4-2.

The tripping time of the circuit breaker shall be determined at 135 percent of the marked current rating of the circuit breaker with all poles carrying current equally and starting at ambient temperature. The tripping time shall not exceed the tripping time "T" shown in Table 4-3.

If the circuit breaker does not trip within the time "T" specified, the breaker shall be permitted to be retested following the performance requirements of 4.2.2.4.2.

NEMA Standard 11-20-1986.

4.2.7 Interrupting Ability Test

4.2.7.1 Requirements

Each circuit breaker shall be subjected to all the operations of the short circuit test without the replacement of any lead during the test.

The circuit breaker shall perform successfully when operated under the short circuit conditions as described in 4.2.7. There shall be no electrical or mechanical breakdown of the devices, and the fuse wire connected to indicate arc-over to the enclosure or grounded metal shall not be ruptured. There shall be no visible damage to the insulation of conductors used to wire the device.

The circuit breaker shall have continuity in the closed position at rated voltage.

The circuit breaker shall be capable of being reset and shall open and close freely. The housing shall be intact and contain no visible cracks as a result of the short circuit test.

NEMA Standard 11-20-1986.

4.2.7.1.1 Standard Test Currents—"Y" Sequence

For all ratings of circuit breakers, the available fault current shall be according to Table 4-13A.

The operations shall be common only and shall be O-t-CO (see 4.2.7.3.1).

NEMA Standard 11-20-1986.

4.2.7.1.2 Standard Test Currents—"Z" Sequence

For all ratings of circuit breakers, the available fault current shall be according to Table 4-13B and the operations shall be according to Table 4-13.

NEMA Standard 11-20-1986.

4.2.7.2 Connections and Mounting

4.2.7.2.1 Mounting

A circuit breaker shall be tested in the same type of enclosure as that used for the overload test. If the mechanism is electrically controlled it shall be supplied at 85 percent rated voltage. It shall be verified that the circuit breaker operates correctly on no-load when it is operated in the above conditions.

For circuit breakers fitted with adjustable over-current releases, samples shall be tested with the release adjusted for the maximum current setting and maximum delay.

All parts of the circuit breaker normally grounded in service, including its enclosure, shall be insulated from ground and connected as indicated in Figure 4-4. This connection shall include a fuse wire for the detection of a fault current. The fuse wire and its connecting conductors shall be as described in 4.2.3.2.

NEMA Standard 11-20-1986.

4.2.7.2.2 Connections

Circuit breakers shall be connected for test following the appropriate diagram shown in Figure 4-4.

Length

Line terminal leads shall be 1.2 meters (4 feet) in length. Load terminal leads shall be 254 mm (10 inches) in length per terminal for multipole tests and 1.2 meters in length for single-pole tests. For 600 ampere frame sizes and larger, leads of any AWG size or cross section shall be permitted to be used as load leads for multipole tests and as extension leads for single-pole tests provided they are not more than 1.2 meters in length and were included in the calibrated circuit.

Circuit breakers rated 1600 amperes or more shall be permitted to be tested with copper bus bar.

Copyright National Electrical Manufacturers Association
Provided by IHS under license with NEMA
No reproduction or networking permitted without license from IHS
Not for Resale

Insulated Cable or Wire Leads

All connecting leads shall consist of Type TW or THW copper wires of sizes indicated in Tables 4-6 and 4-7 corresponding to the current rating of the circuit breaker except that the leads for the tests on 480 and 600 volt circuit breakers rated at 15 amperes or less shall be permitted to be No. 12 AWG.

Bus Bar Leads

Bus bars, when used as leads, shall be copper of sizes indicated in Table 4-7 corresponding to the current rating of the circuit breaker.

Special Considerations

Circuit breakers rated less than 1600 amperes without provisions for connecting wire shall be connected in accordance with Figure 4-2(A) except that the combined length of bus bar and wire leads shall be in accordance with 4.2.7.2.

Circuit breakers designed for connection to mating parts (Plug-In Type) shall be connected in accordance with Figure 4-2 (B).

For circuit breakers of such designs where the points of attachment of wires or bus bars are located on integral or separable parts that extend from the circuit breaker housing, the connection for the short circuit test shall be made to the intended points on the extension members with leads or bus bars.

NEMA Standard 11-20-1986.

The test circuit shall be connected to the line terminals of the circuit breaker as marked by the manufacturer. If the line terminals are not marked, one of the test samples or an additional test sample (see Table 4-1) shall be connected to the test circuit by means of the other set of circuit breaker terminals.

NEMA Standard 11-20-1986.

4.2.7.3 PERFORMANCE OF THE TEST

The temporary connections shall be replaced by the circuit breaker under test connected in accordance with Figure 4-4 and 4.2.7.2.2.

The test sequence shall be as stated in 4.2.7.1.1, 4.2.7.1.2, and in accordance with 4.2.7.3.1.

The recovery voltage shall be maintained for a period not less than 0.1 second after current interruption.

NEMA Standard 11-20-1986.

4.2.7.3.1 INTERRUPTING ABILITY TEST OPERATIONS

Tests for the verification of the interrupting ability consist of a sequence of making and breaking operations:

O—represents a breaking operation;

CO—represents a making operation followed immediately (without any intentional time delay) by a breaking operation;

t—represents a time interval of two minutes or the resetting time of the circuit breaker, whichever is greater, up to a maximum of one (1) hour.

NEMA Standard 11-20-1986.

Copyright National Electrical Manufacturers Association
Provided by IHS under license with NEMA
No reproduction or networking permitted without license from IHS
Not for Resale

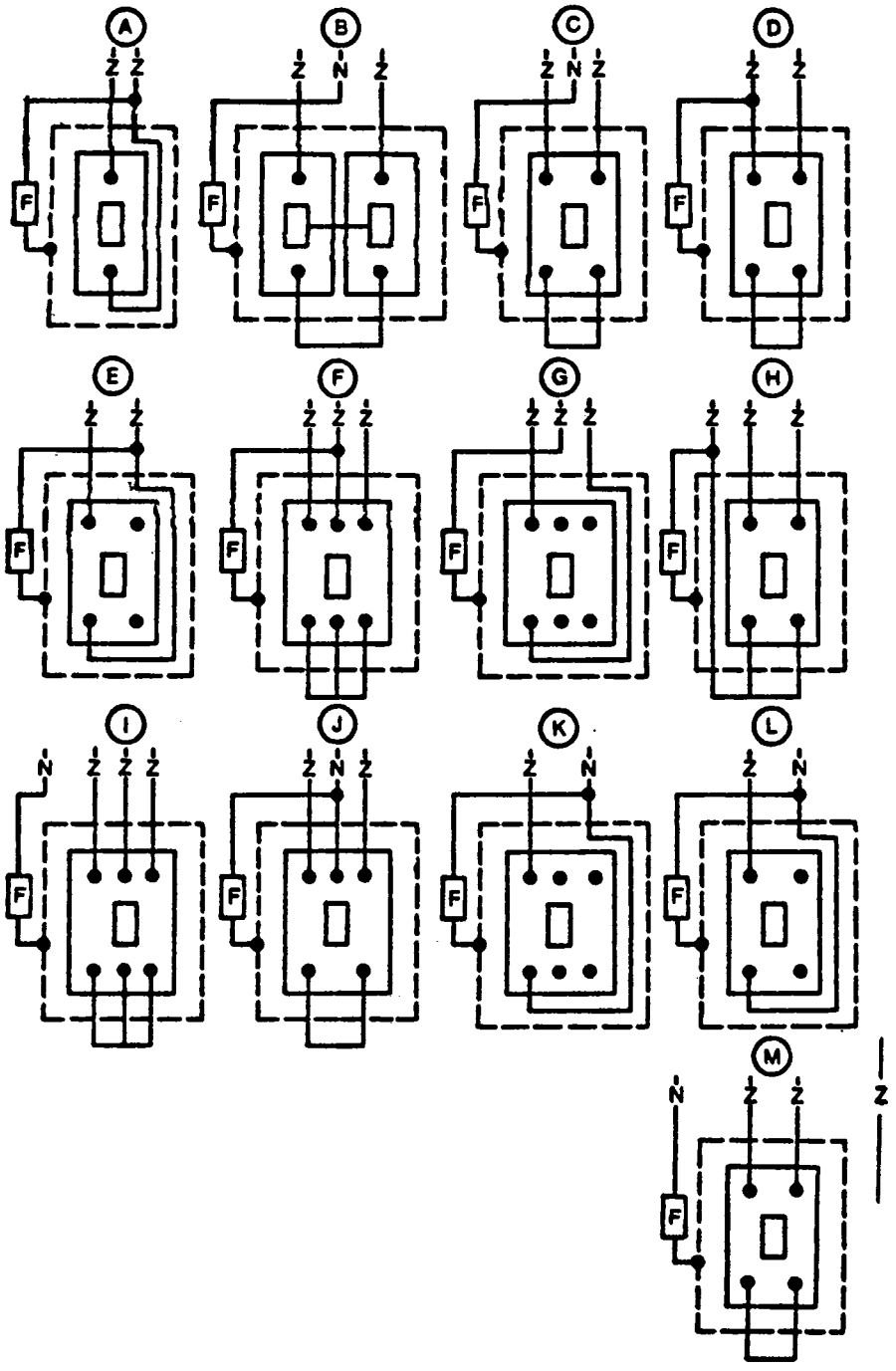

N—NEUTRAL
Z—LIMITING IMPEDANCE
F—FUSE WIRE

---ENCLOSURE

Figure 4-4
INTERRUPTING ABILITY TEST CONNECTION DIAGRAMS
(See Table 4-13.)

Copyright National Electrical Manufacturers Association
Provided by IHS under license with NEMA
No reproduction or networking permitted without license from IHS
Not for Resale

Table 4-13
INTERRUPTING ABILITY OPERATIONS[1]

Poles	Frame Rating	Circuit Breaker AC Voltage Rating	Letters Indicate Diagram in Figure 4-4										Total Number of Operations
			Operations on Each Pole					Common Operations					
			O	t	CO	t	O	O	t	CO	t	O	
1	All	120, 240, 277, 480, 600, or higher	A		A		A	. . .		. . .		. . .	3
1	All	120/240 (tested in pairs)	. . .		. . .		. . .	B		B		B	3
2	All	240, 480, 600, or higher	E		E		. . .	D		. . .		. . .	5
2	All	120/240	. . .		. . .		. . .	C		C		C	3
2	0–1200A	480Y/277	L		L		. . .	M		. . .		. . .	5
2	All	10 or 30 (240, 480, or 600)	E		E		. . .	H		. . .		. . .	5
3	All	240, 480, 600, or higher	G		G		. . .	F		. . .		. . .	7
3	All	120/240	. . .		. . .		. . .	J		J		J	3
3	All	480Y/277	K		K		. . .	I		. . .		. . .	7

[1]For the 125/250 volts DC rating the number of operations is the same as for the 120/240 volts AC rating. For the 250 volts DC rating the number of operations shall be the same as for the 240 volts AC rating.

4.2.7.4 TEST CIRCUIT

4.2.7.4.1 TOLERANCES ON TEST CIRCUIT PARAMETERS AS APPLICABLE

Open Circuit Voltage ≥ 100 percent of rated operational voltage

Current:	+5 percent −0 percent
Power Factor:	+0 −0.05
Frequency:	45–62 Hz
Time Constant:	+15 percent −0 percent

a. If AC, the test voltage shall have a sinusoidal waveform;

b. If DC, the open circuit voltage as determined by the arithmetic average of the maximum and minimum values of the voltage wave shall be within 99 percent and 105 percent of the rated voltage of the circuit breaker;

c. If DC, the minimum point on the voltage wave shall not be less than 90 percent of the rated voltage of the circuit breaker;

d. The value of the tolerance on current shall be permitted to be increased to +10 percent for the prospective peak making current only.

NEMA Standard 11-20-1986.

4.2.7.4.2 POWER FACTOR OF THE TEST CIRCUIT

For AC, the power factor of each phase of the test circuit shall be permitted to be determined according to one of the methods indicated in Section 11.

NEMA Standard 11-20-1986.

Table 4-14
POWER FACTOR OF TEST CIRCUITS FOR SHORT CIRCUIT TESTING

Test Circuit in Amperes	Power Factor
10,000 or less	0.50
10,001–20,000	0.30
20,001–UP	0.20

Copyright National Electrical Manufacturers Association
Provided by IHS under license with NEMA
No reproduction or networking permitted without license from IHS
Not for Resale

Table 4-13A
AVAILABLE CURRENT IN TEST CIRCUITS FOR Y SEQUENCE

Frame Rating	RMS Symmetrical of DC Amperes	
	1-Pole	2- and 3-Pole Common
100 A maximum (250 V maximum)	1,500	1,500
100 A maximum (251–600 V maximum)	3,000	3,000
101–225 A	3,000	3,000
226–400 A	5,000	5,000
401–600 A	6,000	6,000
601–800 A	10,000	10,000
801–1,200 A	. . .	14,000
1,201–1,600 A	. . .	20,000
1,601–2,000 A	. . .	25,000
2,001–2,500 A	. . .	30,000
2,501–3,000 A	. . .	35,000
3,001–4,000 A	. . .	45,000
4,001–5,000 A	. . .	60,000
5,001–6,000 A	. . .	70,000

Table 4-13B
AVAILABLE CURRENT IN TEST CIRCUITS FOR Z SEQUENCE

Frame Rating	RMS Symmetrical or DC Amperes				
	1-Pole	2-Pole Individual	Common	3-Pole Individual	Common
100 A Maximum (250 V Maximum)	5,000	5,000	5,000	4,330 [1,2]	5,000
100 A Maximum					
251–600 V	10,000	10,000	10,000	8,660[1,2,3]	10,000
101–800	10,000	10,000	10,000	8,660[1,2,3]	10,000
801–1,200	. . .	14,000	14,000	12,120[1,3]	14,000
1,201–1,600	. . .	14,000	20,000	14,000	20,000
1,601–2,000	. . .	14,000	25,000	14,000	25,000
2,001–2,500	. . .	20,000	30,000	20,000	30,000
2,501–3,000	. . .	25,000	30,000	25,000	35,000
3,001–4,000	. . .	30,000	45,000	30,000	45,000
4,001–5,000	. . .	40,000	60,000	40,000	60,000
5,001–6,000	. . .	50,000	70,000	50,000	70,000

[1] This value is the current available when using two legs of a 3 phase circuit indicated under "common."

[2] For DC ratings, the current indicated under "common" shall be used for individual pole operation.

[3] For the 480Y/277 volt rating, the current indicated for 2 pole under "individual" shall be used.

Copyright National Electrical Manufacturers Association
Provided by IHS under license with NEMA
No reproduction or networking permitted without license from IHS
Not for Resale

4.2.7.4.3 TIME CONSTANT OF THE TEST CIRCUIT

For DC, the time constant of the test circuit shall be determined according to the method given in Clause 11.6.

The minimum value of the time constant shall be:

≤ 10,000 Amps: 0.003 Sec.
> 10,000 Amps: 0.008 Sec.

NEMA Standard 11-20-1986.

4.2.7.4.4 RECOVERY VOLTAGE

See clause 11.5.

4.2.7.4.5 FREQUENCY OF THE TEST CIRCUIT FOR AC

The test shall be made at a frequency of 45 to 62 Hz.

NEMA Standard 11-20-1986.

4.2.7.4.6 TEST CIRCUITS

The diagrams of the circuits to be used for the tests shall be, for:

a. A single-pole circuit breaker on single-phase AC or on DC (Figure 4-5).
b. A two-pole circuit breaker on single-phase AC or DC (Figure 4-6).
c. A three-pole circuit breaker on three phase AC (Figure 4-7).

A supply "S" feeds a circuit including resistors "R," reactors "L," and the circuit breaker "A" under test.

The resistance and reactance of the test circuit shall be adjustable to satisfy the specified test conditions. The reactors "L" must be air-cored. They shall always be connected in series with the resistor "R," and their value shall be obtained by series coupling of individual reactors; parallel connecting of reactors is permitted when these reactors have essentially the same time constant.

Since the transient recovery voltage characteristics of test circuits including larger air-core reactors are not representative of usual service conditions, the air-core reactor in any phase shall be permitted to be shunted by resistance, the voltampere loss in which is approximately 0.6 percent of the reactive voltamperes in the air-core reactor in that phase.

There shall be only one point of the test circuit which is directly grounded. This shall be permitted to be the short circuit connection of the test circuit or the neutral point of the supply or any other convenient point.

NEMA Standard 11-20-1986.

4.2.7.4.7 CALIBRATION OF THE TEST CIRCUITS

The circuit breaker under test and its connecting conductors shall be replaced by temporary connections having a negligible impedance compared to that of the test circuit.

For AC, resistors and reactors shall be adjusted to obtain, at the test voltage, a current equal to the required short circuit fault current.

For DC, resistors and reactors shall be adjusted so as to obtain, at the test voltage, current the maximum value of which is equal to the required short circuit fault current as well as the time constant as indicated in 4.2.7.4.3.

The test circuit is energized simultaneously in all poles and the current curve is recorded with oscillograph 0_1 for a duration of at least 0.1 second (see Section 11).

NEMA Standard 11-20-1986.

4.2.8 Re-verification of Overcurrent Release Calibration

The operation of overcurrent releases intended to provide overload protection shall be verified at 200 percent of the value of the marked current rating of the circuit breaker. This test may be made at a reduced voltage. During this test each pole shall be tested separately. The tripping time shall be in accordance with Table 4-2. The test shall be performed at an ambient temperature of 25 °C ± 3 °C.

NEMA Standard 11-20-1986.

4.2.9 Dielectric Test

4.2.9.1 CONDITION OF THE CIRCUIT BREAKER FOR TESTS

Dielectric tests shall be made on a circuit breaker mounted as under service conditions, including internal wiring, and in a dry condition.

Metallic screws or bolts shall be placed at all mounting points in accordance with the conditions of normal installation of the circuit breaker. These parts shall be grounded to the circuit breaker enclosure.

NEMA Standard 11-20-1986.

4.2.9.2 VALUE OF TEST VOLTAGE AND CHARACTERISTICS OF EQUIPMENT

The test shall be made using a suitable 500 VA or larger transformer, of which the output voltage can be regulated.

The test voltage shall have a practically sinusoidal waveform, and a frequency between 45 and 62 Hz.

The value of the test voltage shall be as follows:

$2\ U_e + 1000$ volts

NEMA Standard 11-20-1986.

4.2.9.3 VERIFICATION OF DIELECTRIC PROPERTIES

Starting at zero, the applied potential shall be increased to the required test value and held at that value for one minute. The potential is to be increased at a uniform rate and as rapidly as is consistent with its value being correctly indicated by a voltmeter.

Copyright National Electrical Manufacturers Association
Provided by IHS under license with NEMA
No reproduction or networking permitted without license from IHS

Not for Resale

Voltage shall be applied:

a. Between line and load terminals with the breaker open—with the breaker in the tripped and off position.
b. Between terminals of opposite polarity with the breaker closed; and,
c. Between live parts and the overall enclosure with the breaker both open and closed.

There shall be no dielectric breakdown during any of the one-minute tests.

NEMA Standard 11-20-1986.

4.3 RATED SHORT-CIRCUIT CAPACITY TESTS

If the circuit breaker is to be acceptable with a rated short circuit capacity (I_{cu}) greater than indicated in Table 4-13B (common columns for 2 or 3 pole), the following tests shall also be required to establish the breaker rated short circuit capacity.

NEMA Standard 11-20-1986.

4.3.1 Test Sample Selection

One new sample shall be submitted for each test unless the manufacturer agrees to test a sample for more than one rating. Samples shall be selected in accordance with Table 4-15. Each sample shall be subjected to the test sequence per 4.3.2 in the order named unless otherwise specified. If 2-pole and 3-pole circuit breakers are of identical design and have identical short circuit capacity ratings, only the 3-pole breakers shall be tested.

NEMA Standard 11-20-1986.

4.3.2 Sequence of Tests

The following sequence of tests shall be conducted:

a. Verification of overcurrent release calibration ..... (4.3.2.1)
b. Verification of ability to carry rated short time withstand current (when applicable) ..... (7.10.2)
c. Verification of rated short circuit making and breaking capacities ..... (4.3.2.2)
d. Verification of tripping characteristics ..... (4.3.2.3)
e. Verification of dielectric properties ..... (4.3.2.4)

NEMA Standard 11-20-1986

4.3.2.1 VERIFICATION OF OVERCURRENT RELEASE CALIBRATION

Starting at room ambient (25 °C ± 3 °C) a circuit breaker carrying 200 percent of its mark current rating shall operate within the time limits given in Table 4-2.

To determine compliance with 4.3.2.1, each pole of a multipole circuit breaker shall be tested separately wired to a source of any convenient voltage with 1.2 meters of wire per terminal. Conductor size shall comply with Tables 4-6 and 4-7. For breakers tested with bus bars, refer to Table 4-7 and 4.2.4.2.2.

Direct current shall be used for testing breakers rated for DC operation.

NEMA Standard 11-20-1986.

4.3.2.2 VERIFICATION OF RATED SHORT CIRCUIT MAKING AND BREAKING CAPACITY

4.3.2.2.1 REQUIREMENTS

The test for verification of rated short circuit making and breaking capacity shall consist of two random operations: A breaking (“0”) operation followed by a two-minute interval (or the time necessary to allow the breaker to reset, whichever is longer, but not more than one hour) and then a making and breaking (“CO”) operation.

In addition to the test above, a single sample of a circuit breaker rated less than 100 amperes that is the maximum rating for the frame shall be tested with one random breaking (“0”) operation at each level shown in footnote “C” in Table 4-15.

Copyright National Electrical Manufacturers Association
Provided by IHS under license with NEMA
No reproduction or networking permitted without license from IHS
Not for Resale

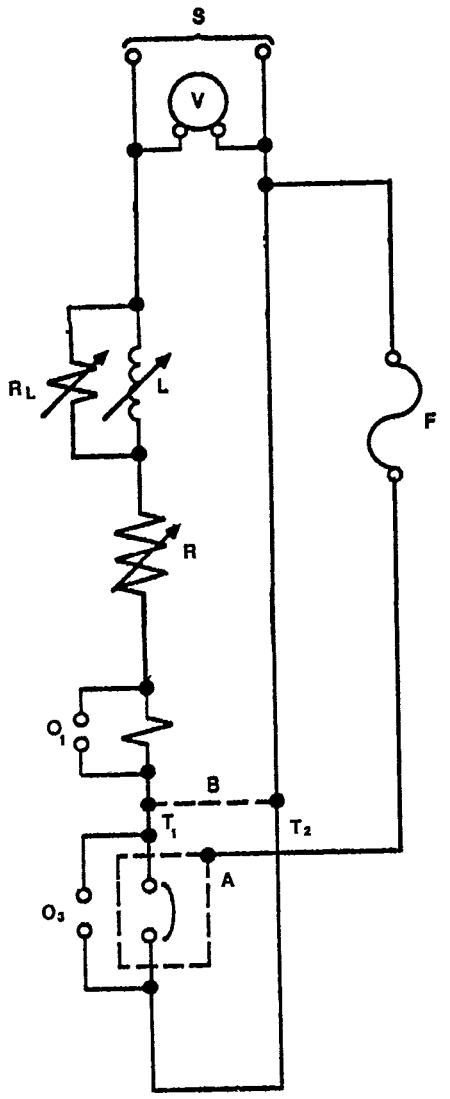

Symbols for this figure:

S—SUPPLY
R—ADJUSTABLE RESISTOR
L—ADJUSTABLE REACTOR
A—CIRCUIT BREAKER UNDER TEST
B—TEMPORARY CONNECTIONS FOR CALIBRATION
V—VOLTMETER
O_1—RECORDING CURRENT ELEMENT* (WHEN USED)
O_3—RECORDING VOLTAGE ELEMENT (WHEN USED)
F—FUSE WIRE FOR THE DETECTION OF A FAULT CURRENT
R_L—SHUNTING RESISTANCE
T_1, T_2—TEST STATION TERMINALS

*O_1—CAN BE ON THE LINE OR LOAD SIDE OF THE TEST BREAKER

Figure 4-5
SINGLE PHASE INTERRUPTING ABILITY TEST CIRCUIT FOR A SINGLE POLE CIRCUIT BREAKER

Copyright National Electrical Manufacturers Association
Provided by IHS under license with NEMA
No reproduction or networking permitted without license from IHS
Not for Resale

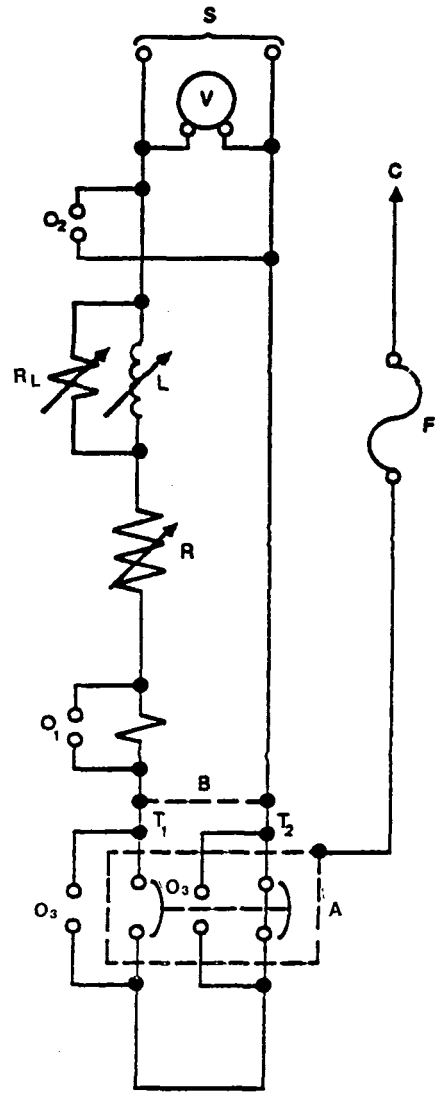

Symbols for this figure:

S—SUPPLY
R—ADJUSTABLE RESISTOR
L—ADJUSTABLE REACTOR
A—CIRCUIT BREAKER UNDER TEST
B—TEMPORARY CONNECTIONS FOR CALIBRATION
V—VOLTMETER
O_1—RECORDING CURRENT ELEMENT* (WHEN USED)
O_2, O_3—RECORDING VOLTAGE ELEMENT (WHEN USED)
F—FUSE WIRE FOR THE DETECTION OF A FAULT CURRENT
R_L—SHUNTING RESISTANCE
C—TO THE APPROPRIATE CONNECTION POINT AS INDICATED BY FIGURE 4-4 AND TABLE 4-13
T_1, T_2—TEST STATION TERMINALS

*O_1—CAN BE ON THE LINE OR LOAD SIDE OF THE TEST BREAKER

Figure 4-6
SINGLE PHASE INTERRUPTING ABILITY TEST CIRCUIT FOR A TWO POLE CIRCUIT BREAKER

Copyright National Electrical Manufacturers Association
Provided by IHS under license with NEMA
No reproduction or networking permitted without license from IHS
Not for Resale

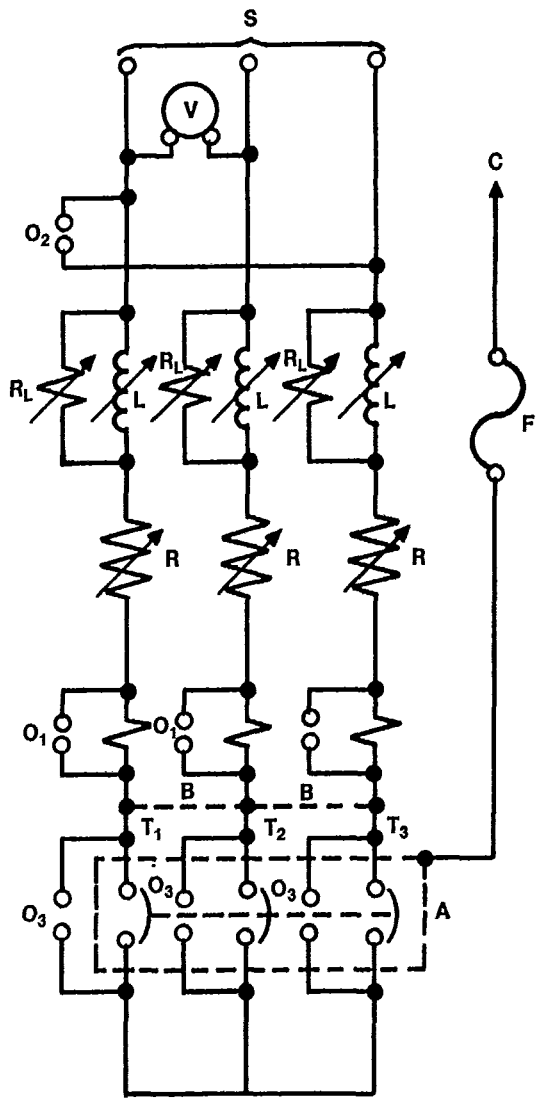

Symbols for this figure:

S—SUPPLY
R—ADJUSTABLE RESISTOR
L—ADJUSTABLE REACTOR
A—CIRCUIT BREAKER UNDER TEST
B—TEMPORARY CONNECTIONS FOR CALIBRATION
V—VOLTMETER
O_1—RECORDING CURRENT ELEMENT* (WHEN USED)
O_2, O_3—RECORDING VOLTAGE ELEMENT (WHEN USED)
F—FUSE WIRE FOR THE DETECTION OF A FAULT CURRENT
R_L—SHUNTING RESISTANCE
C—TO THE APPROPRIATE CONNECTION POINT AS INDICATED BY FIGURE 4-4 AND TABLE 4-13
T_2, T_3—TEST STATION TERMINALS

*O_1—CAN BE ON THE LINE OR LOAD SIDE OF THE TEST BREAKER

Figure 4-7
THREE PHASE INTERRUPTING ABILITY TEST CIRCUIT FOR A THREE POLE CIRCUIT BREAKER

Copyright National Electrical Manufacturers Association
Provided by IHS under license with NEMA
No reproduction or networking permitted without license from IHS
Not for Resale

Tabel 4-15
SAMPLES REQUIRED[c]

Frame Trip Unit Rating	Short Circuit Current (I_{cu})		
	Max I_{cu}	I_{cu} at Max Voltage	I_{cu} at Max kVA
Max	1[a]	1	1[b]
Min	1	. . .	. . .

[a] This test shall be permitted to be omitted if maximum I_{cu} occurs at maximum voltage rating.

[b] This test shall be permitted to be omitted if maximum kVA occurs at maximum voltage rating.

[c] One additional sample is required for breaker frames rated less than 100 amperes to be tested under conditions described in 4.3.2.2.1 and 4.3.2.2.3.

During tests within the limits of rated making and breaking capacities and according to the operating sequence specified above, the circuit breaker shall show no visible external damage; hairline cracks shall be acceptable. There shall be no electrical or mechanical breakdown of the device, except that devices tested as shown in footnote "C" of Table 4-15 shall be permitted to be incapable of reestablishing circuit continuity. The fuse wire connected to indicate arc-over to the enclosure or grounded metal shall not be ruptured. There shall be no visible damage to the insulation of conductors used to wire the device.

NEMA Standard 11-20-1986.

4.3.2.2.2 TEST CURRENTS

Table 4-16 lists the preferred rated short circuit breaking capacities (I_{cu}). One or more ratings shall be permitted to be assigned to a circuit breaker at different voltage ratings (U_e).

Table 4-16
PREFERRED SHORT CIRCUIT RATINGS IN RMS SYMMETRICAL OR DC AMPERES

7,500	25,000	85,000
10,000	30,000	100,000
14,000	35,000	125,000
18,000	42,000	150,000
20,000	50,000	200,000
22,000	65,000	

4.2.7.4.1 shall be referenced for allowable tolerances on test circuit parameters. Test values of these parameters shall be recorded in the test report.

NEMA Standard 11-20-1986.

4.3.2.2.3 CONNECTIONS AND MOUNTING

The circuit breaker under test shall be mounted in the smallest enclosure in which it is intended to be used. See 9.2 for details of test enclosures.

Circuit breaker connections shall be made in accordance with 4.2.7.2.2 and Figure 4-4 except for devices tested as referenced in footnote "C" to Table 4-15.

For the devices tested as referenced in footnote "C" to Table 4-15, line and load terminal leads shall be 254 mm (10 inches) in length and shall be connected to No. 1 AWG leads, each 1.2 meters (4 feet) in length, for connection to the test supply terminals.

NEMA Standard 11-20-1986.

4.3.2.2.4 PERFORMANCE OF TEST

The temporary connections "B" in Figures 4-5, 4-6, and 4-7 shall be replaced by the circuit breaker under test.

If the circuit breaker is designed with adjustable overcurrent releases and the opening time is considered to be affected by the adjustment, these tests shall be conducted with the adjustable releases set at the maximum positions.

The test shall be conducted in accordance with 4.3.2.2.1.

The recovery voltage shall be maintained for a period not less than 0.1 second after current interruption.

NEMA Standard 11-20-1986.

4.3.2.2.5 TEST CIRCUITS

Test circuits shall be in accordance with 4.2.7.4.6.

For the proper power factor or time constant, see 4.2.7.4.2 and 4.2.7.4.3.

Tests for the verification of short circuit making and breaking capacities shall be made at the rated frequency of the circuit breaker. If the rated breaking capacity is essentially dependent on the value of the frequency, the tolerance shall not exceed ±5 percent.

Calibration of Test Circuit

Test circuits shall be calibrated following the procedures outlined in 4.2.7.4.7.

NEMA Standard 11-20-1986.

Copyright National Electrical Manufacturers Association
Provided by IHS under license with NEMA
No reproduction or networking permitted without license from IHS
Not for Resale

4.3.2.3 VERIFICATION OF TRIPPING CHARACTERISTICS

The operation of overcurrent releases shall be verified in accordance with 4.2.8 except that the test current shall be 250 percent of rated uninterrupted current I_n. If the pole under test does not trip in the time permitted, the current shall be immediately increased to 400 percent of rated I_n under which condition the pole under test is required to trip within two additional minutes. This additional 400 percent test shall be permitted on only one pole of a multipole breaker.

This test is not required for circuit breakers tested according to the requirements of footnote "C" to Table 4-15, that are incapable of re-establishing circuit continuity.

NEMA Standard 11-20-1986.

4.3.2.4 VERIFICATION OF DIELECTRIC PROPERTIES

Following the test sequence described in 4.3.2.2 and the verification of tripping characteristics described in 4.3.2.3, the circuit breaker shall be capable of withstanding a voltage equal to twice its rated operational voltage (U_e) for one minute. However, this voltage shall not be less than 900 V:

a. Between line and load terminals with the breaker open, i.e., with the breaker in the tripped and off positions;
b. Between terminals of opposite polarity with the breaker closed; and,
c. Between live parts and the overall enclosure with the breaker both open and closed.

NEMA Standard 11-20-1986.

Copyright National Electrical Manufacturers Association
Provided by IHS under license with NEMA
No reproduction or networking permitted without license from IHS

Not for Resale

Section 5

PERIODIC VERIFICATION TESTS

Subsequent to certification of a circuit breaker in accordance with this standard, production units shall be monitored; and there shall be periodic testing to verify that the certified performance capability is maintained.

NEMA Standard 11-20-1986.

Copyright National Electrical Manufacturers Association
Provided by IHS under license with NEMA
No reproduction or networking permitted without license from IHS

Not for Resale

Section 6
FIELD TESTS

For field testing of breakers refer to NEMA Publication AB 2-1984, *Procedures for Field Inspection and Performance Verification of Molded Case Circuit Breakers Used in Commercial and Industrial Applications.* If more detailed information is required, consult the manufacturer.

Authorized Engineering Information 11-20-1986.

Copyright National Electrical Manufacturers Association
Provided by IHS under license with NEMA
No reproduction or networking permitted without license from IHS

Not for Resale

Section 7
SPECIFIC APPLICATION CIRCUIT BREAKERS

7.1 GENERAL

Specific application circuit breakers shall have electrical ratings, operating characteristics, or mechanical construction for use under service conditions, which shall be permitted to differ from those in 2.1.3, or for use on specific applications.

This shall be in contrast to circuit breakers which are intended primarily to provide overload and short circuit protection for electrical conductors under environments in accordance with 2.1.3.

NEMA Standard 11-20-1986.

7.2 INSTANTANEOUS TRIP CIRCUIT BREAKERS

7.2.1 General

These requirements shall cover circuit breakers with only instantaneous tripping mechanisms. These circuit breakers are intended to be part of a combination motor controller where overload protection, when required, shall be provided by some other means.

Tests of instantaneous trip circuit breakers shall be conducted with the circuit breaker in an enclosure normally used for a combination motor controller or in an enclosure that is considered to represent the actual installation conditions.

The maximum and minimum continuous current ratings of each circuit breaker frame size shall be subjected to the following tests in the order in which they are presented. Intermediate ratings in each frame size shall be selected to represent variations in trip coils and tripping mechanisms. Samples selected with the intermediate ratings shall be subjected to the calibration test only.

If the construction of the instantaneous trip circuit breaker is known to be functionally similar to the construction of an approved general duty circuit breaker, the following exceptions shall apply.

EXCEPTION 1: If similar except for the method of sensing overcurrent conditions; test sequences X and Y shall be permitted to be eliminated.

EXCEPTION 2: If similar except that only the time delay release components of the overcurrent sensing system have been omitted, only the tests specified in 7.2.3.1 shall be required.

NEMA Standard 11-20-1986.

7.2.2 Test Sample Selection

For each representative rating selected, the number of samples to be tested shall be as follows:

Circuit Breaker Continuous Current Rating, Amps.	Number of Samples
0–225	3
226–400	2
401 and higher	1

Samples Required for Reversed Line and Load Connections Not Marked "Line" and "Load" (Fixed Trip Only)

Circuit Breaker Continuous Current Rating, Amps.	Number of Samples
0–400	One sample of the test set or an additional sample
401–1600	One additional sample

NEMA Standard 11-20-1986.

Copyright National Electrical Manufacturers Association
Provided by IHS under license with NEMA
No reproduction or networking permitted without license from IHS
Not for Resale

7.2.3 Sequence of Tests[1]

The design performance of instantaneous trip circuit breakers shall be verified by conducting the following tests in the sequences listed:

Test Sequence "X"	*Clause*
a. Verification of Calibration of Trip Settings	7.2.3.1
b. Overload Performance	7.2.3.2
c. Temperature Rise	7.2.3.3
d. Dielectric Test	7.2.3.7
Test Sequence "Y"	
a. Verification of Calibration of Trip Settings	7.2.3.1
b. Mechanical and Electrical Endurance	7.2.3.4
c. Interrupting Ability Test	7.2.3.5
d. Reverification of Overcurrent Release Calibration	7.2.3.6
e. Dielectric Test	7.2.3.7
Test Sequence "Z"	
a. Verification of Calibration of Trip Settings	7.2.3.1
b. Interrupting Ability Test	7.2.3.5
c. Reverification of Overcurrent Release Calibration	7.2.3.6
d. Dielectric Test	7.2.3.7

NEMA Standard 11-20-1986.

[1] At the option of the manufacturer, test sequences may be combined per 4.2.1.1 and 4.2.1.2. (Note approved as Authorized Engineering Information.)

7.2.3.1 Verification of Calibration of Trip Settings

The calibration of the maximum, minimum, and one intermediate trip setting for each sample shall be verified. The test current shall be increased from zero or some value below the trip setting until the breaker trips. The rate of increase shall be such that an accurate indication of the trip point can be established. Each pole shall be verified separately three times at each setting. The tripping current shall be within the range of 80–120 percent of the marked tripping current for the trip setting tested.

NEMA Standard 11-20-1986.

The test used for the verification of calibration may be pulse testing with controlled closing, or another method that has been found to give an accurate indication of the trip point.

Authorized Engineering Information 11-20-1986.

7.2.3.2 Overload Performance

An overload test shall be conducted as specified in 4.2.3.

NEMA Standard 11-20-1986.

7.2.3.3 Temperature Rise

A temperature-rise test shall be conducted as specified in 4.2.4, except the ambient air temperature during the test can be at least +10°C but not more than +40°C providing it does not very more than +3°C during the test. The test shall be conducted at the maximum current rating of the circuit breaker frame size.

NEMA Standard 11-20-1986.

7.2.3.4 Mechanical and Electrical Endurance

A mechanical and electrical endurance test shall be conducted as specified in 4.2.5. The test shall be conducted at the maximum current rating of the circuit breaker frame size.

NEMA Standard 11-20-1986.

7.2.3.5 Limited Fault Current Making and Breaking Test

A limited fault current making and breaking test shall be conducted in accordance with 4.2.7. During this test, burnout of the magnetic trip coil shall be acceptable.

NEMA Standard 11-20-1986.

7.2.3.6 Reverification of Overcurrent Release Calibration

Following the interrupting ability test in 7.2.3.5, the instantaneous trip circuit breaker shall operate when a current equal to 120 percent of the marked trip setting is passed through each pole separately.

The tripping test is intended to show whether the circuit breaker operating mechanism has been damaged during the short circuit tests. Trip-out shall be determined in accordance with 7.2.3.1 except that the current can be brought quickly to the 120 percent value.

This test shall not be required to be conducted on samples if burnout of trip coil occurs during the test required by 7.2.3.5.

NEMA Standard 11-20-1986.

7.2.3.7 Dielectric Voltage Withstand Test

An instantaneous trip circuit breaker shall be subjected to a dielectric voltage-withstand test in accordance with the requirements in clause 4.2.9.

NEMA Standard 11-20-1986.

Copyright National Electrical Manufacturers Association
Provided by IHS under license with NEMA
No reproduction or networking permitted without license from IHS
Not for Resale

7.3 INTEGRALLY FUSED CIRCUIT BREAKERS

7.3.1 General

An integrally fused circuit breaker shall contain series connected fuses (also called limiters), in each phase, which are physically mounted within the breaker housing. This combination device shall be so interlocked that when the cover over the fuses is removed, the circuit breaker will automatically trip.

Unless marked with the phrase "open fuse tripping not provided," or equivalent, the breaker will also trip when any of the integrally mounted fuses open.

The design performance requirements of the circuit breaker portion of integrally fused circuit breakers shall be verified in accordance with Section 4 and all appropriate sub-clauses (7.2 for instantaneous trip only circuit breakers). If two or more fuse ratings are used within a given frame size, all of the tests outlined in 4.2 (or 7.2 as applicable) shall be performed on the maximum and minimum ratings of the circuit breaker associated with each fuse rating. Tests of the minimum rating shall be permitted to be omitted if the circuit breaker construction, aside from the fuses, has been previously found to comply with 4.2 requirements (or 7.2 as applicable).

Temperature shall not exceed the limits specified in 4.2.4. In addition, temperature shall be measured at the fuse terminals and on the fuse casings and such rises, except as noted, shall not exceed 85 °C. The temperature rise on the fuse casing shall be permitted to exceed 85 °C if the insulating materials are rated for the temperature attained.

NEMA Standard 11-20-1986.

7.3.2 Test Sample Selection

Each of the tests a, b, and c of clause 7.3.3 shall be conducted on a new sample of the maximum current rating of each frame size. In addition, a new sample of the minimum current rating shall be subjected to the rated short circuit making and breaking capacity test b. Following a, b, or c, all test samples shall then be subjected to tests d and e.

NEMA Standard 11-20-1986.

7.3.3 Tests for Integrally Fused Breakers

In addition to performance requirements outlined in 7.3.1, the following tests shall be performed:

a. Crossover Current Test.
b. Rated Short Circuit Making and Breaking Capacity Test.
c. Maximum Energy Test.
d. Verification of Tripping Characteristics.
e. Verification of Dielectric Properties.

NEMA Standard 11-20-1986.

7.3.3.1 CROSSOVER CURRENT TEST

This test shall consist of a multi-phase "O" operation on the circuit breaker of maximum rating of the frame size at currents slightly above the crossover current to ensure operation of fuses. "O" and "CO" tests shall be repeated with dummy fuses at the crossover level unless the circuit breaker construction has been successfully tested at the crossover value of current or higher.

NEMA Standard 11-20-1986.

7.3.3.2 RATED SHORT CIRCUIT MAKING AND BREAKING CAPACITY TEST

The combination device shall be caused to interrupt a circuit of rated short circuit capacity for the "O" and "CO" operation. The test circuit shall have a power factor set in accordance with Table 4-14.

a. During the "O" operation, a full current offset condition is to be present in one phase upon closing the test circuit. Fuse arcing shall be initiated within 30 electrical degrees prior to maximum voltage in that phase. If such arcing initiates prior to 30 degrees of the maximum voltage, a repeat test shall be made in which closing is delayed in order to obtain the desired condition.
b. If the closing angle in Item "a" above is zero degrees, and if arcing within the fuse commences after 90 degrees on the voltage wave, the sample shall be subjected to a test in which closing occurs at maximum voltage (no current offset). Individual poles shall be permitted to be used for such testing in order to avoid destroying fuses unnecessarily.
c. Following the conditions of Item "b" above, an "O" operation shall be made where closing is at a point on the voltage wave 45 degrees after a voltage zero.

NEMA Standard 11-20-1986.

7.3.3.3 MAXIMUM ENERGY TEST

If the short circuit characteristics are found to meet the conditions of Item a of 7.3.3.2, a maximum energy fuse test shall be conducted on the maximum rated fuse within a frame size. This test requires that an interruption be made at a value of symmetrical RMS current such that the fuse permits a peak current of 70–100 percent of the peak symmetrical component of the alternating current of the test circuit. The closing angle shall be at voltage zero in the phase of the pole that is being tested. These tests shall be conducted on a three-phase circuit with one phase meeting these conditions. The power factor shall be in accordance with table 4-14.

NEMA Standard 11-20-1986.

Copyright National Electrical Manufacturers Association
Provided by IHS under license with NEMA
No reproduction or networking permitted without license from IHS
Not for Resale

7.3.3.4 VERIFICATION OF TRIPPING CHARACTERISTICS

This test shall be performed in accordance with 4.3.2.3.
NEMA Standard 11-20-1986.

7.3.3.5 VERIFICATION OF DIELECTRIC PROPERTIES

This test shall be performed in accordance with 4.3.2.4.
NEMA Standard 11-20-1986.

7.4 CURRENT LIMITING CIRCUIT BREAKERS

Requirements for current limiting circuit breakers are under consideration.
Authorized Engineering Information 11-20-1986.

7.5 MARINE CIRCUIT BREAKERS

7.5.1 General

These requirements shall cover marine circuit breakers intended to be installed and used aboard a boat or vessel, in accordance with the Standard for Motor Craft (Pleasure and Commercial), National Fire Protection Association (NFPA) No. 302; the applicable publications of the American Boat and Yacht Council, Inc., and subchapters "S" and "J" of the regulations of the United States Coast Guard. These circuit breakers shall comply with the applicable requirements of the preceding Sections of this Standards Publication except as modified or added to by the following requirements.

These requirements shall apply to all types of circuit breakers intended for marine use and, in addition, apply to low-voltage direct current (DC) circuit breakers rated 50 volts or less intended to be powered from on board batteries.

Circuit breakers to be used in marine service shall be calibrated for an ambient temperature of 40°C.

A terminal intended for connection of field-installed wiring shall be suitable for stranded copper wire.

The requirements of Section 3.2 for corrosion protection shall apply to marine circuit breakers, except that aluminum or aluminum alloys, plated or unplated, shall not be used for terminal connections or parts in direct contact with copper conductors.
NEMA Standard 11-20-1986.

7.5.2 Tests

Marine circuit breakers intended for use on vessels 65 feet (19.8 m) or less in length shall comply with the requirements of Section 4; with all requirements in 7.5.1; and shall be subjected to all of the tests specified within 7.5.2 and its various subclauses.

Marine circuit breakers intended for use on vessels over 65 feet (19.8 m) in length shall comply with the requirements of Section 4, the additional requirements of 7.5.1, and the additional testing requirements of 7.5.2.3, if applicable.

Marine circuit breakers not subjected to the Vibration and Impact Tests shall be marked, "For Use Only on Vessels Over 65 Feet (19.8 m) in Length."
NEMA Standard 11-20-1986.

7.5.2.1 VIBRATION TEST

7.5.2.1.1 Marine circuit breakers shall be capable of withstanding sinusoidal vibration in accordance with Table 7-1 without failure of the device, change in calibration, or failure of the mounting means. Permanent opening of the contacts while carrying 100 percent of rated current, permanent closing of the contacts when open, or the presence of any transient switching action having a duration longer than 5 milliseconds, shall constitute a failure of the device (see 7.5.2.1.3). Neither the supply nor load wiring shall come loose from the terminals during this test.

Table 7-1
VIBRATION TEST REQUIREMENTS

Type	Test Duration	Peak-to-Peak Amplitude in Inches (mm)	Frequency
Circuit Breakers Marked "Ignition-Protected"	12 hours (4 hrs. in each X, Y, and Z planes)	0.020 ± 0.001 (0.51 ± 0.03)	10-60-10 Hz (every 4 min.)
Circuit Breakers Not Marked "Ignition-Protected"	12 hours (4 hrs. in each X, Y, and Z planes)	0.015 ± 0.001 (0.38 ± 0.03)	10-60-10 Hz (every 4 min.)

Copyright National Electrical Manufacturers Association
Provided by IHS under license with NEMA
No reproduction or networking permitted without license from IHS
Not for Resale

7.5.2.1.2 Two new circuit breakers shall be mounted on separate 0.135-inch (3.43 mm) steel or aluminum panels, which shall be, in turn, secured to two rigid, welded test fixtures secured to the vibration table (see Figure 7-1). One circuit breaker and panel shall be secured in the intended manner to the vertical surface of the test fixture and the other to a surface inclined 30 degrees from the vertical. If the circuit breakers are provided with their own enclosure, two enclosures, with the circuit breakers installed, shall be mounted directly to the test fixtures in the manner and positions described for the individual circuit breaker panels. Unsupported panel surfaces shall be kept to a minimum to avoid resonance of the panels within the test frequency range. Each circuit breaker shall be wired with stranded copper conductors of the appropriate size for the rating and the terminal set screws torqued in accordance with the manufacturer's instructions. The wires shall be connected to a power supply and instrumentation located off the platform of the vibration test machine. The wiring shall be installed to simulate a normal installation and shall be secured within 7 inches (179 mm) of the terminals. As installed, the wiring shall not be resonant.

NEMA Standard 11-20-1986.

7.5.2.1.3 To determine if the contacts open when closed or close when opened, an oscilloscope shall be connected across the circuit breaker contacts. The frequency at which contact bounce is observed, during the resonant frequency search, shall be considered to be a resonant frequency and used in the test described in 7.5.2.1.5.

NEMA Standard 11-20-1986.

7.5.2.1.4 While mounted as described in 7.5.2.1.2, each circuit breaker shall be connected to a supply capable of delivering minimum rated voltage and sufficient current to give accurate indication of contacts opening or closing. The circuit breakers shall be turned off during the first two hours of testing in each plane of vibration and turned on with 100 percent of rated current during the final two hours in each plane. The test shall be conducted at room ambient.

NEMA Standard 11-20-1986.

7.5.2.1.5 The device shall be subjected to sinusoidal vibration at the resonant frequencies of the device in each plane (see Figure 7-1). The resonant frequencies shall be determined by vibrating the device in each plane at a peak-to-peak amplitude within the frequency range of 10 to 60 Hertz (Hz). If no major resonance is found, the tests shall be conducted at 55 Hz. If two or more resonant conditions are found, the device shall be tested at each resonant frequency for a minimum of one hour.

NEMA Standard 11-20-1986.

7.5.2.1.6 For these tests, peak-to-peak amplitude shall be defined as the total displacement of sinusoidal motion of the test table. Resonance shall be defined as the maximum magnification of the applied vibration.

NEMA Standard 11-20-1986.

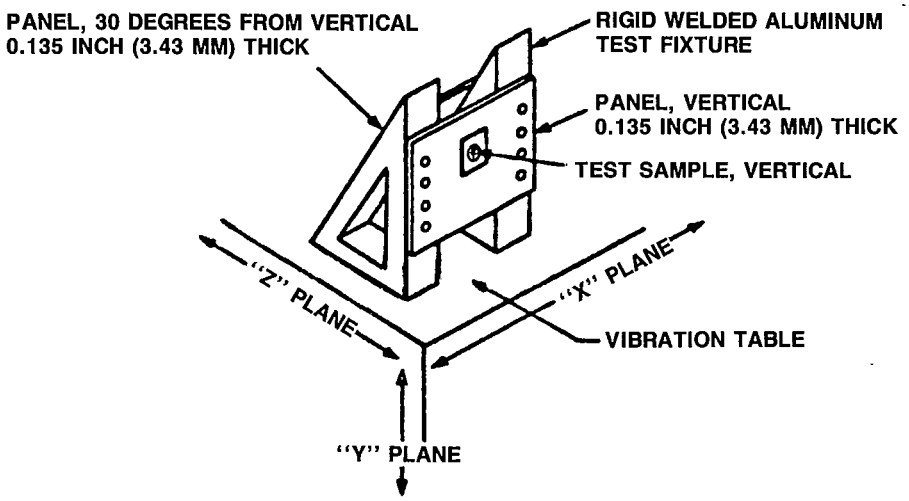

Figure 7-1
TYPICAL VIBRATION TABLE TEST SET UP

Copyright National Electrical Manufacturers Association
Provided by IHS under license with NEMA
No reproduction or networking permitted without license from IHS
Not for Resale

7.5.2.2 SHOCK TEST

7.5.2.2.1 The circuit breakers used in the vibration test shall withstand 5000 impacts of 10-g (322 feet/s², 98 m/s²) peak with a duration of 20–25 milliseconds (measured at the base of the approximate half-sine shock wave envelope) without failure of the device, change in calibration, or failure of the mounting means. Permanent opening of the contacts while carrying 100 percent of rated current at any convenient voltage, permanent closing of the contacts when open, or the presence of any transient switching action having a duration longer than 5 milliseconds shall constitute a failure of the device (see 7.5.2.1.3). Neither the supply nor the load wiring shall come loose from the terminals during this test.

NEMA Standard 11-20-1986.

7.5.2.2.2 The circuit breakers and mounting fixture used in the vibration test shall be mounted on the shock table and subjected to the impacts indicated in 7.5.2.2.1. The devices shall be installed and wired as described in 7.5.2.1.2. The circuit breakers shall carry 100 percent of their rated current at any convenient voltage during the first 2500 impacts and shall be in the "OFF" position at rated voltage for the final 2500 shock impulses.

NEMA Standard 11-20-1986.

7.5.2.2.3 Following the shock test, a calibration test (see 4.2.2.4.1) at 200 percent of rated current shall be conducted.

NEMA Standard 11-20-1986.

7.5.2.3 SHORT-CIRCUIT TEST

A short-circuit test shall be conducted on all circuit breakers rated at 50 volts or less with a source of DC current capable of delivering 3000 amperes. The current shall be measured 0.05 seconds after initiation of the short through a 4-foot (1.2 m) length of No. 1 AWG (42.4 mm) stranded copper wire. The test method, sample selection, and acceptance criteria shall be in accordance with 4.2.7.

NEMA Standard 11-20-1986.

7.6 MINING CIRCUIT BREAKERS

Molded case circuit breakers for mining duty applications shall be designed to withstand the severe duty and environmental conditions present in mining applications.

The design performance of mining circuit breakers shall be verified in accordance with 4.2 with the following exceptions:

a. 4.2.2.2—Verification of Instantaneous Trip Setting—The tolerance for both maximum and minimum instantaneous trip setting tests on mining circuit breakers shall be 90–110 percent of nominal current value for the trip setting.
b. 4.2.7.1.1—Standard Test Currents—For mining circuit breakers rated 1000 VAC, the available fault current is to be (1) 3000 rms symmetrical amperes for mining circuit breakers rated nominally at 300 amperes or less, (2) 4000 rms symmetrical amperes for circuit breakers rated nominally between 301 and 400 amperes, inclusive, and (3) 6000 rms symmetrical amperes for mining circuit breakers rated nominally at more than 400 amperes.

NEMA Standard 11-20-1986.

7.6.1 Rated Short Circuit Making and Breaking Capacity Test

Interrupting rating requirements of mining circuit breakers shall be verified in accordance with 4.3 except in 4.3.2.2.2, short circuit making and breaking capacity test currents for mining circuit breakers rated 1000 VAC and/or 300 VDC shall be as shown in Table 7-2.

NEMA Standard 11-20-1986.

Table 7-2
RATED SHORT CIRCUIT CAPACITY TESTS

Rated Voltage	Test Current	Power Factor	Min. Time Constant L/R	Operating Cycle
1,000 AC	10,000A Sym*	0.45 to 0.50	. . .	0–2 min. - CO
1,000 AC	12,000A Sym*	0.25 to 0.30	. . .	0–2 min. - CO
1,000 AC	14,000A Sym*	0.25 to 0.30	. . .	0–2 min. - CO
1,000 AC	22,000A Sym*	0.15 to 0.20	. . .	0–2 min. - CO
300 DC	5,000A	. . .	0.04 sec.	0–2 min. - CO
300 DC	10,000A	. . .	0.08 sec.	0–2 min. - CO

*For asymmetrical values consult the manufacturer.

Copyright National Electrical Manufacturers Association
Provided by IHS under license with NEMA
No reproduction or networking permitted without license from IHS
Not for Resale

7.6.1.1 VERIFICATION OF TRIPPING CHARACTERISTICS

Following the rated short circuit capacity test in 7.6.1, the circuit breakers, if supplied with overcurrent releases intended to provide overload protection, shall be subjected to a verification of tripping characteristics test in accordance with the requirements in 4.3.2.3. If circuit breakers are of an instantaneous trip type only, then the circuit breakers shall be subjected to the verification of tripping characteristics test in accordance with the requirements in 7.2.3.6.

NEMA Standard 11-20-1986.

7.6.1.2 VERIFICATION OF DIELECTRIC PROPERTIES

Following the verification of tripping characteristics test in 7.6.1.1, the circuit breakers shall be subjected to a dielectric voltage withstand test in accordance with the requirements in 4.3.2.4.

NEMA Standard 11-20-1986.

7.6.2 Operational Test

Two additional samples shall perform satisfactorily for 5,000 total tripping operations in close, trip immediately and reset sequence; at a rate of one operation per minute or at a rate not greater than that given in Table 4-11 (4.2.5.1.1). Tripping shall be accomplished by means of an undervoltage trip device.

NEMA Standard 11-20-1986.

7.6.3 Marking

In addition to the marking requirements of Section 10, mining circuit breakers shall be marked with their instantaneous trip setting and cable sizes corresponding to these settings per MSHA Code of Federal Regulation, Title 30, Mineral Resources.

Marking shall be readily visible on the breaker cover, durable and resistant to minor abrasion.

NEMA Standard 11-20-1986.

7.7 MOLDED CASE SWITCHES

7.7.1 General

Molded Case Switches are essentially molded case circuit breakers, without inverse time trip mechanisms, intended for use as switching devices. Molded case switches shall be permitted to have instantaneous trip mechanisms.

Molded case switches shall be permitted to be supplied with accessories such as undervoltage trips or shunt releases.

NEMA Standard 11-20-1986.

7.7.2 Tests

Molded case switches shall be tested in accordance with the following sections:

a. Overload Performance 4.2.3
b. Temperature Rise 4.2.4
c. Mechanical and Electrical Endurance 4.2.5
d. Rated Short Circuit Withstand Capacity ...7.7.3

When the molded case switch construction is the same as the corresponding circuit breaker version, except that the inverse time trip mechanism is omitted, the tests required by 4.2.3, 4.2.4, and 4.2.5 shall be permitted to be eliminated. In addition, when the molded case switch short circuit ratings are the same as the corresponding circuit breaker version and the ampere rating of the intended overcurrent protective device is the same as, or less than, the switch, the tests required by 7.7.3 shall also be permitted to be eliminated.

When the molded case switch construction is the same as the corresponding circuit breaker version, except that both the inverse time trip mechanism and the instaneous release components are omitted, then only the tests required by 4.2.3, 4.2.4, and 4.2.5 shall be permitted to be eliminated.

NEMA Standard 11-20-1986.

7.7.3 Rated Short Circuit Withstand Capacity Test

7.7.3.1 OPENING TEST

Switches shall be permitted to be tested with or without specified overcurrent protective devices.

NEMA Standard 11-20-1986.

7.7.3.1.1 TEST PREPARATION

A previously untested sample shall be permitted to be used for this test.

The switch shall be mounted as described in Section 4.2.3.2.1.

The line and load terminals of the switch shall be connected to the corresponding test-circuit terminals by copper wire leads a maximum of 4 feet (1.22 meters) in length per terminal, each of which has an ampacity not less than the current rating of the switch.

All parts of the switch normally grounded in service, including its enclosure, shall be insulated from ground and connected as indicated in Figure 7-2. This connection shall include a fuse wire for the detection of a fault current. The fuse wire and its connecting conductors shall be as described in 4.2.3.2.

Copyright National Electrical Manufacturers Association
Provided by IHS under license with NEMA
No reproduction or networking permitted without license from IHS
Not for Resale

If the switch is intended to be protected by an unspecified overcurrent protective device, device "CL," as indicated in Figure 7-2 shall be omitted from the circuit.

If the switch has a withstand rating of 10,000 amperes or less and is intended to be protected by fuses of an unspecified type, Class H fuses of the maximum rating for the cartridge size of the rating specified shall be installed on the load side of the device as shown in Figure 7-2.

If the switch is intended to be protected by specific current limiting fuses, fuses having characteristics representing the peak let-through current (Ip) and maximum I^2t values associated with the maximum rated fuses of the cartridge size of the intended fuses, shall be installed on the load side of the device as shown in Figure 7-2. Each of these fuses shall be of such characteristics that, when tested on a single-phase circuit, it will permit a peak let-through current and a maximum clearing of I^2t not less than the corresponding values specified in the requirements for the class, current and voltage ratings of the fuse being represented. Special test fuses having the required characteristics shall be permitted to be used.

NEMA Standard 11-20-1986.

To obtain the required values of these characteristics, it may be necessary to employ a fuse having a larger current rating and/or different class than that of the fuse intended to protect the switch.

Authorized Engineering Information 11-20-1986.

Fuses used for tests shall be selected from a lot which has been calibrated to determine their I^2t and Ip characteristics comply with the prescribed values called for above.

Lot compliance shall be verified by testing two samples if the fuses are of class G, J, R, or T, or one sample if the fuses are class L.

NEMA Standard 11-20-1986.

Special calibrated and certified fuses for use in the noted tests are commercially available. These are identified as "test limiters."

Authorized Engineering Information 11-20-1986.

If the switch is intended to be protected by a specific circuit breaker, such a breaker shall be installed on the load side of the device as shown in Figure 7-2.

NEMA Standard 11-20-1986.

7.7.3.1.2 METHOD

With the switch in the full closed position, the test circuit providing maximum withstand current for which the switch is rated shall be randomly closed on that sample by a means external to the switch except that for a switch with an instantaneous trip mechanism, the test circuit shall be adjusted to a value just below the pick up current of the instantaneous trip of the switch. The test circuit shall be maintained:

1. For 3 cycles when device "CL" is omitted, or
2. Until the overcurrent device specified in 7.7.3.1.1 opens.

Test circuit specifications shall be as indicated in Section 4.2.7.4.

NEMA Standard 11-20-1986.

7.7.3.1.3 EVALUATION

Upon completion of this test:

The fuse connected to the enclosure shall not have opened.

There shall be no breakage to the extent that the integrity of the mounting of live parts is impaired.

An enclosure door shall have been prevented by its latching means from opening during the test (deformation of the enclosure is acceptable).

The switch contacts shall be open or be capable of being opened when the operating handle is manually moved to the "off" position.

NEMA Standard 11-20-1986.

7.7.3.1.4 DIELECTRIC TEST

Unless the same sample is to be subjected to the closing test, a switch that has been subjected to the short circuit withstand test shall be subjected to the dielectric test as described in 4.2.9, except that the test potential is to be twice the rated voltage of the switch but not less than 900 volts.

NEMA Standard 11-20-1986.

7.7.3.2 CLOSING TEST

7.7.3.2.1 TEST PREPARATION

The sample used for the short-circuit withstand test or, at the option of the manufacturer, a previously unused sample shall be connected to the test circuit. The requirements of 7.7.3.1.1, shall apply.

NEMA Standard 11-20-1986.

7.7.3.2.2 METHOD

The switch shall be closed on a circuit capable of providing the maximum short circuit withstand current for which the switch is rated.

Test circuit specifications shall be as indicated in Section 4.2.7.4.

NEMA Standard 11-20-1986.

7.7.3.2.3 EVALUATION

After the fault has cleared, the switch shall comply with the applicable requirements of 7.7.3.1.3.

NEMA Standard 11-20-1986.

Copyright National Electrical Manufacturers Association
Provided by IHS under license with NEMA
No reproduction or networking permitted without license from IHS

Not for Resale

7.7.3.2.4 DIELECTRIC TEST

The dielectric voltage-withstand test described in 4.2.9 shall be repeated following the closing test, except that the test potential shall be twice the rated voltage of the switch but not less than 900 volts.

NEMA Standard 11-20-1986.

7.7.4 Marking

Molded case switches shall be marked according to the requirements of 10.2.

NEMA Standard 11-20-1986.

7.8 ELECTRONIC TRIP UNIT CIRCUIT BREAKERS

7.8.1 General

Electronic trip unit circuit breakers are circuit breakers whose trip units sense current levels and initiate tripping through electronic means. As an additional feature, electronic trip unit circuit breakers shall be permitted to provide G.F.P. for equipment.

There are two basic types of electronic trip unit circuit breakers:

1. Circuit breakers in which the characteristic curve profile, pick up point, and continuous current ratings can be field adjustable (Type A).
2. Circuit breakers in which the continuous current ratings can be changed within the frame rating, but once set cannot be changed without the addition or substitution of a part (Type B). A tool shall be required to make the addition or substitution.

In addition to the requirements outlined below, these circuit breakers shall comply with each of the appropriate requirements enumerated in these Standards, as applicable, in the maximum setting of all adjustments.

For Type A circuit breakers, terminal conductors shall be sized in accordance with the maximum continuous-rated current of the circuit breaker.

For Type B circuit breakers, terminal conductors shall be sized in accordance with the maximum continuous current value to which the circuit breaker can be set.

NEMA Standard 11-20-1986.

Circuit breakers are also available as combinations of both basic types.

Authorized Engineering Information 11-20-1986.

7.8.2 Adjustable Trip Curve Circuit Breakers (Type A)

Adjustable trip curve circuit breakers are circuit breakers in which the characteristics, curve profile, pick up point, and continuous current ratings can be field adjustable.

Authorized Engineering Information 11-20-1986.

7.8.2.1 CONSTRUCTION REQUIREMENTS

The circuit breaker shall be clearly marked to indicate whether the trip adjustment is a continuous current setting or a pick up point. A trip adjustment which is marked as a continuous current setting shall not be adjustable to higher than 100 percent of the marked ampere rating on the breaker.

Current adjustment and pickup settings shall be individually distinctive and be expressed as a percent, or decimal equivalent of the marked ampere rating.

NEMA Standard 11-20-1986.

7.8.2.2 VERIFICATION OF CALIBRATION TESTS

The circuit breaker shall meet all of the requirements of 4.2.2 with trip adjustments set at both maximum and minimum positions. The circuit breaker shall trip at two or more intermediate settings while carrying a value of current equal to 135 percent of that setting.

NEMA Standard 11-20-1986.

Copyright National Electrical Manufacturers Association
Provided by IHS under license with NEMA
No reproduction or networking permitted without license from IHS
Not for Resale

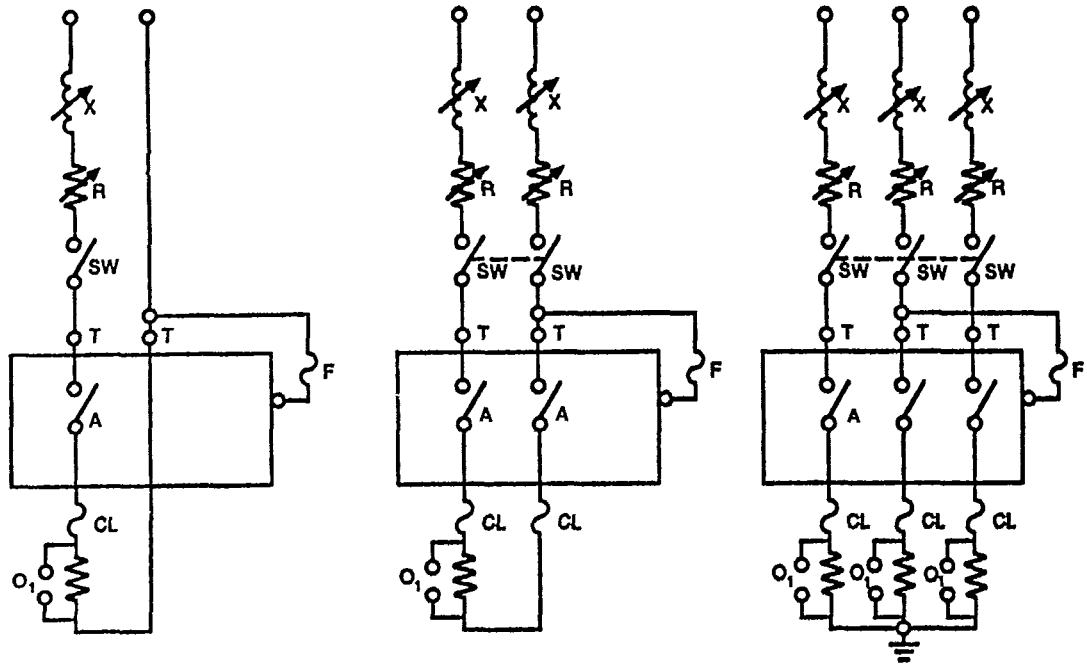

A—SWITCH UNDER TEST
X—VARIABLE TAP AIR-CORE REACTOR
R—VARIABLE RESISTOR
SW—CLOSING SWITCH—MAY BE LOCATED AS SHOWN OR AHEAD OF LIMITING IMPEDANCE
F—FUSE WIRE FOR DETECTION OF A FAULT CURRENT
CL—CIRCUIT BREAKERS OR FUSES
T—TEST STATION TERMINALS
O_1—RECORDING CURRENT ELEMENT (WHEN USED)*

*O_1 CAN BE ON THE LINE OR LOAD SIDE OF THE SWITCH UNDER TEST

COMMON CONNECTION OF OUTER SHELLS OF COAXIAL SHUNTS MAY BE GROUNDED IF NO OTHER GROUNDS ON THE CIRCUIT.

Figure 7-2
CIRCUIT FOR SWITCH WITHSTAND AND CLOSING TESTS

Copyright National Electrical Manufacturers Association
Provided by IHS under license with NEMA
No reproduction or networking permitted without license from IHS
Not for Resale

7.8.3 Changeable Ampere Rating Circuit Breakers (Type B)

Changeable ampere rating circuit breakers are circuit breakers in which the continuous current ratings can be changed within the frame rating, but once set can be changed without the addition or substitution of a part. A tool shall be required to make the addition or substitution.

NEMA Standard 11-20-1986.

7.8.3.1 CONSTRUCTION REQUIREMENTS

The circuit breaker shall have means to set or fix the ampere rating in the field. Changing the ampere rating shall require the substitution or addition of a component. When the component is removed, the breaker shall revert to its minimum ampere rating or shall trip and shall not be capable of being reclosed until that component or a similar one is replaced in the breaker. A tool shall be required to make the addition or substitution.

NEMA Standard 11-20-1986.

7.8.3.2 MARKING

The circuit breaker shall be clearly marked to indicate the ampere rating to which it has been set or fixed.

NEMA Standard 11-20-1986.

7.8.3.3 VERIFICATION OF CALIBRATION TESTS

The circuit breaker shall comply with the requirements of 4.2.2 at all ampere ratings to which it is capable of being set.

NEMA Standard 11-20-1986.

7.9 SWITCHING DUTY CIRCUIT BREAKERS

7.9.1 General

A circuit breaker intended to switch lighting loads on a regular basis shall, in addition to the requirements of Sections 4.1, 4.2, and 4.3, be subjected to the endurance and temperature test described in 4.5.2.

NEMA Standard 11-20-1986.

7.9.2 Requirements

Three new samples of the circuit breaker shall be subjected to a temperature test after 999, 1000, 1001 and 2999, 3000 and 3001 operating cycles of load endurance.

Except as noted in 4.5.4.2, line and load terminal temperature rises and insulating material temperature limits must not exceed the values specified in Tables 4-9 and 4-10.

NEMA Standard 11-20-1986.

7.9.3 *Connections and Mounting*

For the load endurance test the breaker shall be mounted and connected according to 4.2.5.

For the temperature test, the breaker shall be mounted and connected according to 4.2.4.

To determine the temperature of the insulating material, a thermocouple shall be attached externally on the circuit breaker housing directly opposite the stationary contact.

NEMA Standard 11-20-1986.

7.9.4 Test Sequences

7.9.4.1 BASIC TEST SEQUENCE

The circuit breaker shall be mounted and connected as specified in 4.5.3 and operated for 999 load endurance operating cycles according to 4.2.5.3.2. After the 999th operating cycle the breaker shall be operated only to close the contacts for the temperature test.

The temperature test shall be conducted on the breaker mounted and connected as specified in 4.5.3 and conducted in accordance with 4.2.4.

Following the temperature test, the breaker shall be opened and then reclosed. This operation shall be permitted to be performed with full supply voltage, low voltage or no voltage across the contacts.

A second temperature test shall then be conducted in the same manner as the previous temperature test.

Following the second temperature test the breaker shall again be opened and then reclosed.

A third temperature test shall then be conducted.

Following the temperature tests, the circuit breaker shall be subjected to additional load endurance operating cycles for a total of 2999 cycles (including those cycles made during the first set of temperature tests). The breaker is then to be operated to only close the contacts to initiate the second set of temperature tests.

A second set of operating cycles and temperature tests is to be conducted in the same manner as for the 999, 1000 and 1001 set.

NEMA Standard 11-20-1986.

7.9.4.2 TEST SEQUENCE IF TEMPERATURE READINGS EXCEED PERMITTED LIMITS

7.9.4.2.1 ONE TEMPERATURE READING EXCEEDING LIMITS

If the temperature reading exceeds permitted limits during the temperature tests following the 999, 1000 and 1001 or 2999, 3000, 3001 operations, the circuit breaker shall be operated for three additional cycles. Each cycle shall be followed by a temperature test conducted as in the basic sequence.

To be considered acceptable, all three additional temperature measurements shall be in compliance with the temperature limits.

NEMA Standard 11-20-1986.

Copyright National Electrical Manufacturers Association
Provided by IHS under license with NEMA
No reproduction or networking permitted without license from IHS
Not for Resale

7.9.4.2.2 One Temperature Reading on Each of Two Samples Exceeds the Limits

Three additional sets of operating cycles and temperature tests shall be conducted on each of the two breakers on which excessive temperatures were recorded.

All six additional temperature measurements shall be in compliance with the temperature limits.

NEMA Standard 11-20-1986.

7.10 RATED SHORT-TIME WITHSTAND CURRENT (Icw) RATED CIRCUIT BREAKERS

7.10.1 General

The rated short-time withstand current of a breaker or switch is the value of current assigned by the manufacturer under the test conditions specified in 7.10.2.

For AC, the value of this current is the rms value of the AC component of the prospective short-circuit current.

The duration of the rated short-time withstand current shall be assigned by the manufacturer.

A circuit breaker fitted with overcurrent releases need not have a rated short-time withstand current assigned to it if such a circuit breaker can carry the current corresponding to its rated short-circuit breaking capacity for its total break time with the overcurrent releases set at their maximum time lag (see 4.3.2.2). If, however, a circuit breaker normally fitted with overcurrent releases can also be used without these releases, then a rated short-time withstand current shall be assigned. Similarly, an integrally fused circuit breaker need not have a rated short-time withstand current assigned to it if the combination can carry the current for the operating time of the fuses; however, if a circuit breaker normally used as part of an integrally fused circuit breaker can also be without fuses and without overcurrent releases, then a rated short-time withstand current shall be assigned.

NEMA Standard 11-20-1986.

7.10.2 Verification of the Ability to Carry Rated Short-Time Withstand Current (Icw)

This test shall be made before and on the same sample as the maximum voltage short-circuit making and breaking capacity test (see 4.3.2) permitted to be made before or after the short-circuit test. It shall also be permitted to be made on a separate sample at the option of the manufacturer.

The tests shall be made, with the circuit breaker in the closed position, at rated voltage and starting with the circuit breaker at the ambient air temperature. The breaker shall not trip during this test.

a. *AC*

The tests shall be made at the rated frequency of the circuit breaker.

The rated short-time withstand current shall be applied for the period of time assigned by the manufacturer. The test circuit shall meet the requirements of 4.2.7.4.

b. *DC*

The rated short-time withstand current with its value determined from the oscillogram at least equal to the specified value shall be applied for the specified time.

NEMA Standard 11-20-1986.

Copyright National Electrical Manufacturers Association
Provided by IHS under license with NEMA
No reproduction or networking permitted without license from IHS
Not for Resale

Section 8
ACCESSORIES

8.1 GENERAL

Accessories are devices that are added to circuit breakers and switches which perform a secondary function. They include shunt releases, undervoltage releases, auxiliary switches, and such. Accessories may be factory or field installed.

Authorized Engineering Information 11-20-1986.

8.2 GENERAL REQUIREMENTS

8.2.1 Spacings

With any combination of accessories installed, the circuit breaker spacings shall be not less than those given in Table 12-1.

NEMA Standard 11-20-1986.

8.2.2 Testing

In order to reduce the amount of testing, a number of accessories (shunt trip, electrical operator, auxiliary switch, and such) shall be permitted to be added to a circuit breaker and the combination tested together as a unit.

NEMA Standard 11-20-1986.

8.2.3 Installation Instructions

Installation instructions for field installable accessories shall be provided with the accessory. These instructions shall include information concerning its installation, wiring, and the specific type of breaker(s) with which the accessory is to be used.

NEMA Standard 11-20-1986.

8.3 SHUNT-TRIP RELEASE

8.3.1 General A shunt-trip release shall have a normally open auxiliary switch ("a" type) connected in series with its coil. Where the operating voltage for the coil is taken from the load side of the circuit breaker or when the shunt-trip coil is rated for continuous duty, the auxiliary switch shall be permitted to be omitted.

NEMA Standard 11-20-1986.

8.3.2 Rated Control Voltage

The rated control voltage for shunt-trip devices shall be:

1. *Direct Current*—Any control voltage up to a maximum of 250 volts.
2. *Alternating Current*—Any control voltage up to a maximum of 600 volts.

NEMA Standard 11-20-1986.

8.3.3 Sequence of Testing

The sequence of testing shall be as shown in Table 8-1.

NEMA Standard 11-20-1986.

8.3.4 Test Sample Selection

One test sample of the maximum continuous current rating of the frame size shall be selected. Each sample shall be subjected to the test sequence per clause 8.3.3. If two- and three-pole circuit breakers are of similar design, only the three-pole breakers shall be required to be tested.

NEMA Standard 11-20-1986.

8.3.5 Testing

8.3.5.1 Minimum Tripping Voltage Test

The minimum tripping voltage of shunt-trip releases shall be 75 percent of the rated voltage of the trip coil for both direct and alternating current applications. A shunt-trip device intended for use in conjunction with ground fault protection equipment shall have a minimum tripping voltage of 55 percent of its rated voltage.

NEMA Standard 11-20-1986.

8.3.5.2 Temperature Rise Test

A coil of a shunt-trip release, rated for continuous duty, shall pass a temperature rise test with the device energized at 100 percent rated voltage. The circuit breaker and coil shall meet the requirement of clause 4.2.4. A coil rated for continuous duty shall be capable of withstanding 110 percent of its rated voltage continuously without coil burnout.

NEMA Standard 11-20-1986.

8.3.5.3 Endurance Test

The shunt-trip release shall be capable of tripping the circuit breaker for the number of operations per Table 8-2. During this test the shunt-trip voltage shall be removed while the circuit breaker is reset and closed.

NEMA Standard 11-20-1986.

8.3.5.4 Rated Short-Circuit Making and Breaking Capacity Test

With the shunt-trip release installed, the circuit breaker shall meet the requirements of the rated short-circuit making and breaking capacity test (4.3.2.2) at the interrupting current rating for the maximum voltage rating.

NEMA Standard 11-20-1986.

Copyright National Electrical Manufacturers Association
Provided by IHS under license with NEMA
No reproduction or networking permitted without license from IHS
Not for Resale

8.3.5.5 VERIFICATION OF DIELECTRIC WITHSTAND

Following the test sequence per 8.3.3, the circuit breaker shall meet the requirements of the dielectric test per 4.3.2.4. In addition, the test voltages shall be applied between:

a. The shunt-trip coil winding and live parts of the circuit breaker;
b. Associated wiring and all live parts of the circuit breaker; and,
c. The coil winding and the frame of the shunt-trip device using a voltage of 1000 volts plus twice the rated voltage of the coil.

NEMA Standard 11-20-1986.

8.4 UNDERVOLTAGE TRIP RELEASE

8.4.1 General

An undervoltage trip release normally has its coil connected to the line side of the circuit breaker without an auxiliary switch. An attempt to close the circuit breaker during an undervoltage condition shall not result in maintaining contacts in a closed position for more than 0.17 seconds.

NEMA Standard 11-20-1986.

8.4.2 Rated Control Voltage

The rated control voltage for undervoltage trip releases shall be:

1. *Direct Current*—Any control voltage up to a maximum of 250 volts.
2. *Alternating Current*—Any control voltage up to a maximum of 600 volts.

8.4.3 Sequence of Test

The sequence of test shall be as shown in Table 8-1.

NEMA Standard 11-20-1986.

8.4.4 Test Sample Selection

One circuit breaker test sample of the maximum continuous current rating of the frame size shall be selected and equipped with the undervoltage coil which produces the highest wattage loss. This sample shall be subjected to the test sequence per Table 8-1. If two- and three-pole circuit breakers are of similar design, only the three-pole breakers shall be required to be tested.

NEMA Standard 11-20-1986.

8.4.5 Testing

8.4.5.1 OPERATING CONDITIONS

The undervoltage release shall meet the following operating conditions:

a. When the trip coil is energized at 85 percent of the marked voltage rating, the circuit breaker shall be able to be reset, closed, and remain closed.
b. Not operate to open the circuit breaker at 70 percent and higher of the marked voltage rating of the trip coil.
c. Operate to open the circuit breaker at 35 percent and less of the marked voltage rating of the trip coil.

NEMA Standard 11-20-1986.

8.4.5.2 TEMPERATURE RISE TEST

The coil of the undervoltage trip release shall pass a temperature rise test with the device energized at 110 percent rated voltage and the main circuit carrying rated uninterrupted current (I_u). The circuit breaker and coil shall meet the requirements of 4.2.4.

NEMA Standard 11-20-1986.

8.4.5.3 ENDURANCE TEST

The undervoltage trip release shall be capable of being operated for the number of operations per table 8-2.

The test shall be conducted with the coil being initially energized at a value of 85 percent of the marked voltage rating of the coil and then reduced to zero in order to trip the circuit breaker. The last ten (10) operations shall be conducted in accordance with the requirements of 8.4.5.1.

NEMA Standard 11-20-1986.

8.4.5.4 RATED SHORT-CIRCUIT MAKING AND BREAKING CAPACITY TEST

With the undervoltage trip device installed and energized the circuit breaker shall meet the requirements of the rated short-circuit making and breaking capacity test (4.3.2.2) at the interrupting current rating for the maximum voltage rating.

NEMA Standard 11-20-1986.

8.4.5.5 VERIFICATION OF DIELECTRIC WITHSTAND

Following the test sequence per 8.4.3, the circuit breaker shall meet the requirements of the dielectric test per 4.3.2.4. In addition, test voltages shall be applied between:

a. The undervoltage coil winding and live parts of the circuit breaker;
b. The associated wiring and all live parts of the circuit breaker; and,
c. The coil winding and frame of the undervoltage trip device using a voltage of 1000 volts plus twice the rated voltage of the coil.

Copyright National Electrical Manufacturers Association
Provided by IHS under license with NEMA
No reproduction or networking permitted without license from IHS
Not for Resale

8.5 AUXILIARY AND ALARM SWITCHES

8.5.1 General

Auxiliary switches are normally mounted within the molded case of the circuit breaker and are mechanically operated by the main switching device.

An alarm switch is a type of auxiliary switch that operates only upon the tripping of the circuit breaker in which it is installed.

NEMA Standard 11-20-1986.

8.5.2 Ratings

The rated current for auxiliary and alarm switches shall be that recommended by the circuit breaker manufacturer for the particular voltage rating. The rated voltage for the switches shall be:

1. *Direct Current*—Any marked voltage up to a maximum of 250 volts.
2. *Alternating Current*—Any marked voltage up to a maximum of 600 volts.

NEMA Standard 11-20-1986.

8.5.3 Sequence of Test

The sequence of test shall be as shown in Table 8-1.

NEMA Standard 11-20-1986.

8.5.4 Test Sample Selection

One circuit breaker test sample of the maximum current rating of the frame size shall be equipped with the maximum number of auxiliary switches installed. The sample shall be subjected to the test sequence per Table 8-1. If two- and three-pole circuit breakers are of similar design, only the three-pole breakers shall be required to be tested.

NEMA Standard 11-20-1986.

8.5.5 Testing

8.5.5.1 ENDURANCE TEST

Auxiliary and alarm switches shall be tested for the number of operations per Table 8-2. The endurance test shall be made at the current and voltage rating assigned by the circuit breaker manufacturer.

NEMA Standard 11-20-1986.

8.5.5.2 RATED SHORT-CIRCUIT MAKING AND BREAKING CAPACITY TEST

With the auxiliary or alarm switch installed, the circuit breaker shall meet the requirements of the rated short-circuit making and breaking capacity test (clause 4.3.2.2) for the maximum voltage rating.

NEMA Standard 11-20-1986.

8.5.5.3 VERIFICATION OF DIELECTRIC WITHSTAND

Following the test sequence per 8.5.3, the circuit breaker shall meet the requirments of the dielectric test per 4.3.2.4. In addition, test voltages shall be applied between:

a. The associated wiring and all live parts of the breaker; and,
b. The terminals and frame of the auxiliary or alarm switch using a voltage of 1000 volts plus twice the rated voltage of the switch.

NEMA Standard 11-20-1986.

8.6 ELECTRICAL OPERATOR

8.6.1 General

An electrical operator is a device that performs the opening, closing and resetting of a circuit breaker. Provision shall be made for manual operation of the circuit breaker with the electrical operator installed.

NEMA Standard 11-20-1986.

8.6.2 Rated Control Voltage

Preferred rated voltages for electrical operators shall be:

1. *Direct Current*—48, 125, 250 volts.
2. *Alternating Current*—120, 240, 480 volts.

NEMA Standard 11-20-1986.

8.6.3 Sequence of Test

The sequence of test shall be as shown in Table 8-1.

NEMA Standard 11-20-1986.

8.6.4 Test Sample Selection

One test sample shall be tested with the circuit breaker of a frame size with which it is intended to be used. If an electrical operator is intended to be used with circuit breakers of different frame sizes, then one test sample shall be tested with a circuit breaker of the largest frame size and a circuit breaker of the smallest frame size.

NEMA Standard 11-20-1986.

8.6.5 Testing

8.6.5.1 ENDURANCE TEST

An electrical operator which is intended to be used with a circuit breaker of a specific frame size shall be tested with that circuit breaker for the number of operations in Table 8-2. The first 25 operations shall be conducted at 85 percent of the rated voltage of the electrical operator. During each of these operations, the circuit breaker shall be tripped so as to involve a resetting operation.

Copyright National Electrical Manufacturers Association
Provided by IHS under license with NEMA
No reproduction or networking permitted without license from IHS
Not for Resale

The next 25 operations shall be conducted at 110 percent of rated voltage of the electrical operator. During each of these operations the circuit breaker shall be tripped so as to involve a resetting operation.

The balance of the operations shall be completed with the electrical operator connected to a rated voltage supply and cycled "ON" and "OFF" without tripping the circuit breaker.

If an overcurrent or overload protective device is provided with the electrical operator, it shall be permitted to be bypassed during the endurance test.

NEMA Standard 11-20-1986.

8.6.5.2 Rated Short-Circuit Making and Breaking Capacity Test

With the electrical operator installed, the circuit breaker shall meet the requirements of the rated short-circuit making and breaking capacity test (4.3.2.2) at the interrupting current rating for the maximum voltage rating. The "CO" operation shall be performed by the electrical operator.

NEMA Standard 11-20-1986.

8.6.5.3 Verification of Dielectric Withstand

Following the Rated Short-Circuit Capacity Test, the electrical operator shall meet the requirements of the dielectric test per 4.3.2.4. In addition, the test voltage shall be applied between:

a. The electrical operator coil winding and live parts of the breaker;
b. The associated wiring and all live parts of the circuit breaker; and,
c. The current carrying parts and the frame of the electrical operator using a voltage of 1000 VAC.

NEMA Standard 11-20-1986.

8.7 FUSE ACCESSORY PACKAGE

8.7.1 General

A Fuse Accessory Package provides series-connected fuses physically mounted in a supporting housing which is not part of the circuit breaker, and is not required to be interlocked with the circuit breaker.

The design performance requirements of a circuit breaker with the Fuse Accessory Package installed shall be verified in accordance with 4.2 and all appropriate subclauses (for instantaneous only circuit breakers, see 7.2). If two or more fuse ratings are used within a given frame size, all of the tests outlined in 4.2 (and 7.2 as applicable) shall be performed on the maximum and minimum ratings of the circuit breaker associated with each fuse rating. Tests of the minimum rating can be omitted if the circuit breaker construction, aside from the fuses, has been previously found to comply with 4.2 requirements (and 7.2 as applicable).

Temperatures at Field Wiring Terminals shall not exceed the limits specified in 4.2.4. In addition, temperatures shall be measured at the fuse terminals and on the fuse casings and such rises, except as noted, shall not exceed 85 °C. The temperature rise on the fuse casing shall be permitted to exceed 85 °C if the insulating materials are rated for the temperature attained.

NEMA Standard 11-20-1986.

8.7.2 Testing

Circuit breakers with the Fuse Accessory Package installed shall be tested as integrally fused breakers (see 7.3).

For magnetic only breaker-fuse combinations for which thermal calibration tests 125, 135, and 200 percent calibration and 250 percent calibration (after short circuit) are not applicable, an additional magnetic calibration test shall be performed in place of the post short circuit thermal calibration test (see 7.2.3.6 and 7.2.3.5).

NEMA Standard 11-20-1986.

8.8 MECHANICAL INTERLOCK

8.8.1 General

A mechanical interlock is a device that mechanically interlocks two or more circuit breakers so that only one can be closed at any time.

NEMA Standard 11-20-1986.

8.8.2 Sequence of Test

The sequence of test shall be as shown in Table 8-1.

NEMA Standard 11-20-1986.

8.8.3 Test Sample Selection

Two circuit breaker test samples shall be selected of the maximum continuous current rating of the frame. If a mechanical interlock is used with more than one frame size, the sample selected shall be from the frame with the maximum continuous current rating. If the two- and three-pole circuit breakers are of similar design, only the three-pole breakers shall be required to be tested.

NEMA Standard 11-20-1986.

8.8.4 Testing

8.8.4.1 Endurance Test

The mechanical interlock shall be capable of being operated for the number of operations per Table 8-2.

NEMA Standard 11-20-1986.

Copyright National Electrical Manufacturers Association
Provided by IHS under license with NEMA
No reproduction or networking permitted without license from IHS

Not for Resale

8.8.4.2 Rated Short-Circuit Making and Breaking Capacity Test

With the mechanical interlock installed, the circuit breaker shall meet the requirements of the short circuit making and breaking capacity test (4.3.2.2) at the interrupting rating for the maximum voltage rating.

NEMA Standard 11-20-1986.

8.8.4.3 Verification of Dielectric Withstand

Following the rated short-circuit making and breaking capacity test, the circuit breakers shall meet the requirements of the dielectric test per 4.3.2.4. In addition, this test voltage shall be applied between live parts of the circuit breaker and metal parts of the mechanical interlock.

NEMA Standard 11-20-1986.

8.9 HANDLE LOCK

8.9.1 General

A handle lock is a device which prevents the unintended operation of the circuit breaker handle either from "ON" to "OFF" or vice versa. Provision shall be permitted to be for locking or sealing the device. No testing shall be required, but spacing requirements shall be in accordance with 8.2.1.

NEMA Standard 11-20-1986.

Table 8-1
ACCESSORY TEST SEQUENCES

Tests	Sequences Required for Devices Shown					
	Shunt Trip Release	Undervoltage Release	Auxiliary Switch	Alarm Switch	Electrical Operator	Mechanical Interlock
Minimum Tripping Voltage	X					
Temperature Rise	X	X				
Endurance	X	X	X	X	X	X
Rated Short Circuit Making and Breaking Test	X	X	X	X	X	X
Dielectric Test	X	X	X	X	X	X

Table 8-2
ACCESSORY ENDURANCE OPERATIONS*

Frame Size in Amperes	Operations Required for Devices Shown					
	Shunt Trip Release	Undervoltage Release	Auxiliary Switch	Alarm Switch	Electrical Operator	Mechanical Interlock
< 100	600	600	10,000	600	4,000	10,000
101–225	400	400	8,000	400	4,000	8,000
226–600	100	100	6,000	100	4,000	6,000
601–800	100	100	3,500	50	3,000	3,500
801–2,500	100	100	2,500	50	2,000	2,500
2,501–6,000	100	100	1,500	40	1,100	1,500

*For rate of operation refer to Table 4-11.

Copyright National Electrical Manufacturers Association
Provided by IHS under license with NEMA
No reproduction or networking permitted without license from IHS
Not for Resale

Section 9
CIRCUIT BREAKER AND MOLDED CASE SWITCH ENCLOSURES

9.1 ENCLOSURES FOR GENERAL USE

Circuit breaker and switch enclosures shall be of the Type Designations described in NEMA Standards Publication No. 250-1985 and shall meet the requirements contained therein. Ventilated enclosures shall be permitted to be provided for circuit breaker frame sizes rated 400 amperes or more. Enclosures intended for use in non-hazardous locations shall additionally meet the construction requirements of this clause and all applicable subclauses.

NEMA Standard 11-20-1986.

9.1.1 Construction Requirements for Non-hazardous Location Enclosures

9.1.1.1 GENERAL

An enclosure designed to accommodate a breaker or switch shall employ materials throughout that are suitable for the purpose and shall be constructed to have ample strength and rigidity necessary to resist the ordinary abuses to which it may be subjected so that (1) it will retain its shape, (2) doors will close tightly, and (3) covers, fronts, and such, will fit properly. It shall enclose completely all current-carrying parts regardless of the position of the breaker or switch handle and shall have suitable means for mounting.

NEMA Standard 11-20-1986.

9.1.1.2 CORROSION PROTECTION

The enclosure and internal parts shall be made of corrosion resistant metal or shall have surfaces suitably protected against corrosion by painting, galvanizing, plating, or other equivalent means.

NEMA Standard 11-20-1986.

9.1.1.3 OPENINGS IN ENCLOSURES

Openings in enclosures shall be permitted for mounting of the enclosure or of enclosed equipment or parts or for other essential purposes, provided test criteria of NEMA Standards Publication 250-1985 are met.

NEMA Standard 11-20-1986.

9.1.1.4 OPERATING MECHANISM

The design and construction of the operating mechanism, when included, shall be such as to insure ample strength and rigidity. It shall not be necessary to expose wiring or live parts in order to operate a circuit breaker installed in the enclosure.

NEMA Standard 11-20-1986.

9.1.1.5 PROVISION FOR LOCKING

A door or cover that gives access to the interior of the enclosure shall be fastened by screws or shall have provision for locking.

Means shall be available to positively lock the circuit breaker or switch in the "off" position with a padlock.

NEMA Standard 11-20-1986.

9.1.1.6 CURRENT-CARRYING PARTS

A circuit breaker or switch enclosure that incorporates current carrying parts, other than a neutral, shall meet the requirements of 4.2.4 when tested with the maximum rating of circuit breaker for which the enclosure is rated carrying 80 percent of the current for which that breaker is rated or 100 percent of the current if the breaker is so rated.

Any terminals provided as part of a breaker or switch enclosure, including the neutral, shall be suitable for the wire size and type associated with the circuit breakers designated to be installed.

A neutral assembly in or for use in a breaker or switch enclosure shall have an ampacity equal to the highest ampere rating of the circuit breaker with which it is intended to be used.

NEMA Standard 11-20-1986.

9.1.1.7 SPACINGS WITHIN THE ENCLOSURE

Between Live Parts and From Live Parts to Grounded Dead Metal—

Spacings in an enclosed breaker or switch shall comply with Table 12-1; and,

Between End of Wiring Lugs and Opposite Wall.

The distance between the end of any wire connector or lug and the wall of the enclosure toward which the conductor as directed or through which the connected conductor may normally pass shall be as indicated in Table 9-1.

NEMA Standard 11-20-1986.

9.1.1.8 ENCLOSURES FOR USE AS SERVICE EQUIPMENT

A circuit breaker or switch enclosure intended to be suitable for use as service equipment shall:

a. Have provision for a separate connection of and disconnecting means for the grounded service conductor and the grounded load conductor;
b. Have provision for the connection of an appropriately sized grounding electrode conductor; and,
c. Have provisions for interconnecting the grounded service conductor, the grounding electrode conductor, and the enclosure itself.

NEMA Standard 11-20-1986.

Copyright National Electrical Manufacturers Association
Provided by IHS under license with NEMA
No reproduction or networking permitted without license from IHS
Not for Resale

9.1.1.9 MARKING

See 10.5.1.

NEMA Standard 11-20-1986.

9.2 TEST ENCLOSURES

9.2.1 General

The purpose of using an enclosure where specified in the Design Performance Tests is to simulate installation conditions. The most significant features are the placement of grounded metal surfaces relative to the circuit breaker and the volume of the enclosure.

Authorized Engineering Information 11-20-1986.

9.2.2 Mechanical Details

The enclosure shall completely house the circuit breaker being tested. When a ventilated enclosure is specified, it shall be ventilated as specified by the circuit breaker manufacturer.

Openings in the enclosure for the entry and exit of conductors shall be permitted but such openings shall not be permitted to exceed 10 percent of surface area of the enclosure. Openings for an operating handle shall be close fitting and expose only the area intended to be exposed in general use.

For testing purposes, the inner surfaces of the enclosure shall be bare metal. The walls of the enclosure shall be positioned from the surfaces of the circuit breaker so that each wall is located at the minimum distance as specified by the manufacturer.

NEMA Standard 11-20-1986.

Table 9-1
WIRE-BENDING SPACE

Wire Size AWG or MCM	Minimum Bending Space in Inches,[a] Terminal to Wall — Wire Size Wires Per Terminal (Pole)[b] 1	2	3	4 or more
16–10	Not specified	. . .	. . .	. . .
8	1½	. . .	. . .	. . .
6	2	. . .	. . .	. . .
4	3	. . .	. . .	. . .
3	3	. . .	. . .	. . .
2	3½	. . .	. . .	. . .
1	4½	. . .	. . .	. . .
0	5½	5½	7	. . .
2/0	6	6	7½	. . .
3/0	6½ (½)	6½ (½)	8	. . .
4/0	7 (1)	7½ (1½)	8½ (½)	. . .
250	8½ (2)	8½ (2)	9 (1)	10
300	10 (3)	10 (2)	11 (1)	12
350	12 (3)	12 (3)	13 (3)	14 (2)
400	13 (3)	13 (3)	14 (3)	15 (3)
500	14 (3)	14 (3)	15 (3)	16 (3)
600	15 (3)	16 (3)	18 (3)	19 (3)
700	16 (3)	18 (3)	20 (3)	22 (3)
750	17 (3)	19 (3)	22 (3)	24 (3)
800	18	20	22	24
900	19	22	24	24
1000	20	. . .	. . .	. . .
1250	22	. . .	. . .	. . .
1500–2000	24	. . .	. . .	. . .

[a] Metric equivalents (cm) may be calculated by multiplying inches X 2.54.

[b] Wire bending space shall be permitted to be reduced by the number of inches shown in parentheses under the following conditions:

1. Only removable wire or lay-in connectors receiving one wire each are used. (There may be more than one removable wire connector per terminal.) (Sentence approved as Authorized Engineering Information.)

2. The removable wire or lay-in connectors can be removed from their intended location without disturbing structural or electrical parts other than a cover, and can be reinstated with the conductor in place.

Copyright National Electrical Manufacturers Association
Provided by IHS under license with NEMA
No reproduction or networking permitted without license from IHS
Not for Resale

9.2.2.1 MATERIAL

The test enclosure shall be made of metal of such thickness as to provide strength commensurate with that of enclosures used under normal service conditions.

NEMA Standard 11-20-1986.

9.2.2.2 INSULATION

Insulators or insulating members shall be permitted to be mounted and located in the test enclosure only where they would normally be employed in a circuit breaker or switch enclosure.

NEMA Standard 11-20-1986.

9.2.2.3 CURRENT-CARRYING PARTS

Current-carrying parts that must be integral with the enclosure to make connection to the breaker or to the test conductors shall have the minimum configuration and cross section as those intended for use with the circuit breaker.

NEMA Standard 11-20-1986.

Copyright National Electrical Manufacturers Association
Provided by IHS under license with NEMA
No reproduction or networking permitted without license from IHS

Not for Resale

Section 10

MARKING REQUIREMENTS

10.1 CIRCUIT BREAKER MARKING(S)

The marking(s) shall be on the circuit breaker itself or on a nameplate or nameplates attached to the circuit breaker, and shall be located in a place such that they are visible and legible. Each circuit breaker shall be marked in a durable manner with the following data:

a. Manufacturer's name or trademark;
b. Type designation or identification number;
c. Rated current;
d. Rated operational voltages with corresponding rated short-circuit breaking capacities;

EXCEPTION: For circuit breakers rated 240 volts maximum with short circuit breaking capacities of 5000 amperes, the short circuit breaking capacity shall be permitted to be omitted.

e. Indication of a required barrier (if the proper operations or installation is dependent upon an insulation barrier);
f. "LINE" and "LOAD" (if it is an interchangeable trip circuit breaker or is not suitable for reverse connection);
g. Rated short-time withstand current (if applicable);
h. "ON" and "OFF" for indicating the closed and open positions at the place of operation. If symbols are used, "I" and "O" shall be used to indicate the closed and open position, respectively.

A circuit breaker provided with an accessory or accessories shall be marked to include type, proper connections (if not obvious), and the electrical ratings of the accessories.

Additional specialized applications information or limitations shall be marked on the breaker as applicable.

NEMA Standard 11-20-1986.

10.2 MOLDED CASE SWITCH MARKING(S)

The marking(s) shall be on the molded case switch itself or on a nameplate or nameplates attached to the molded case switch, and shall be located in a place such that they are visible and legible. Each molded case switch shall be marked in a durable manner with the following data:

a. Manufacturer's name or trademark;
b. Type designation or identification number;
c. The words "Molded Case Switch" and "No Overcurrent Protection";
d. Rated current and rated operational voltage;
e. Indication of a required barrier (if the proper operations or installation is dependent upon an insulation barrier);
f. "ON" and "OFF" for indicating the closed and open positions at the place of operation. If symbols are used, "I" and "O" shall be used to indicate the closed and open position, respectively; and,
g. Rated short-time withstand currents (if applicable).

A molded case switch provided with an accessory or accessories shall be marked to include type, proper connections (if not obvious), and the electrical ratings of the accessories.

Additional specialized application information or limitations shall be marked on the switch, as applicable.

NEMA Standard 11-20-1986.

10.3 ACCESSORY MARKING(S)

If an accessory is provided separately from the circuit breaker with which it is intended to be used, it shall be marked as follows:

a. Manufacturer's name or trademark;
b. The accessory's type designation or identification number; and,
c. The accessory's electrical ratings.

NEMA Standard 11-20-1986.

10.4 MARKING OF ENCLOSURES

Enclosure markings shall be permitted to be directly on the enclosure, on a nameplate or nameplate attached to the exterior of the enclosure cover, or on the inside of the cover, provided the cover may be opened or removed regardless of the position of the breaker handle. Each circuit breaker enclosure shall be marked in a durable manner with the following data:

a. Manufacturer's name or trademark;
b. Type designation and/or identification number;
c. Maximum rated operational voltage;
d. Maximum rated current of the frame size; and,
e. "ON" and "OFF" for indicating the open and closed positions of the circuit breaker or switch at the place of operation (if the enclosure has an external operating mechanism or if the breaker or switch handle extends outside the enclosure cover and its "ON" and "OFF" markings are not visible with the enclosure cover in place). The "ON" and "OFF" markings shall be embossed or molded into the cover or hand mechanism, or located on separate label(s) or nameplate(s). If symbols are used, "I" and "O" shall be used to indicate the closed and open positions, respectively.

Copyright National Electrical Manufacturers Association
Provided by IHS under license with NEMA
No reproduction or networking permitted without license from IHS
Not for Resale

In addition to the markings required above, the circuit breaker or switch enclosure shall contain, either external to the enclosure or on the inside of the enclosure, the following data:

a. Mounting instructions as required;
b. Type of breakers or switches for which the enclosure is suitable;
c. NEMA enclosure type (see NEMA Standards Publication 250-1985);
d. An enclosed circuit breaker or switch marked "Suitable for Use as Service Equipment" shall be provided with a marking "Service Disconnect" in the form of a pressure sensitive label in an envelope or on a card;
e. If mounting means for an insulated, groundable neutral is provided in the enclosure, the neutral assembly ampere rating, catalog number the equivalent identification shall be given; and,
f. Warning information (see 10.5).

NEMA Standard 11-20-1986.

10.5 MARKING INFORMATION

10.5.1 Outside of Enclosure

To make the user aware of immediate or potential hazards in their application, installation, use or maintenance, circuit breaker, or switch enclosures shall be conspicuously marked on the outside of the cover or door of the enclosure with the following text (or effective equivalent) and symbol, and shall reflect the following format. Where the enclosure has trim or a dead front, labels shall be permitted to be placed on the trim or dead front.

DANGER: Hazard of electrical shock or burn. Turn off power supplying this device before working inside. [Add additional explanatory text as appropriate.]

The symbol for danger shall have the proportions shown in Figure 10-1.

Vivid red (ISCC-NBS11) Munsell Notation 7.5R 4.0/14 shall be the predominant visual color for either the signal word "DANGER" and the symbol, or for background. Black, white, or metallic shall be permitted to be used for contrast. These colors shall be used either for the lettering or the background.

This requirement is not intended to rule out the use of other labels or markings which are required to comply with other nationally recognized standards or applicable laws or regulations, such as radiation warnings, or which shall be deemed necessary by the manufacturer.

NEMA Standard 11-20-1986.

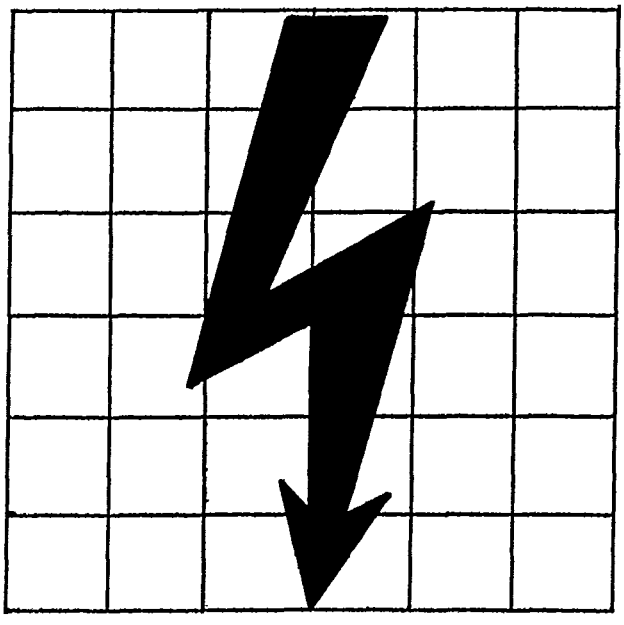

Real dimensions:
Height = 1.48a
Width = 0.58a

Figure 10-1

10.5.2 Inside of Enclosure

The warning instruction on the inside of the enclosure shall be in accordance with Figure 10-2 (or its effective equivalent). Any color shall be permitted to be used. The symbol for DANGER is not required. (As an alternative, warning instructions shall be permitted to be located on a label on the outside of the cover or door.)

NEMA Standard 11-20-1986.

DANGER: TURN OFF POWER ahead of circuit breaker (or switch) before working inside. Afterwards:

a. Replace all parts and close cover before turning power on.
b. Close cover before turning power on.

[Use (a) or (b), whichever is appropriate. Add additional explanatory text, as appropriate.]

Figure 10-2
WARNING INSTRUCTION

Copyright National Electrical Manufacturers Association
Provided by IHS under license with NEMA
No reproduction or networking permitted without license from IHS
Not for Resale

Section 11

DETERMINATION OF SHORT-CIRCUIT CURRENT, POWER FACTOR, AND RECOVERY VOLTAGE

11.1 INSTRUMENTATION

Instrumentation for recording voltage, current, and time for circuit calibration and testing shall be of a type having a flat (±5 percent) frequency response from 45–3000 hertz for alternating current and from 0–3000 hertz for direct current circuits.

NEMA Standard 11-20-1986.

11.2 CIRCUIT CONDITIONS

The circuit shall be calibrated with the circuit breaker and its conductor(s) omitted and replaced with a shorting bar of negligible impedance.

NEMA Standard 11-20-1986.

11.3 ALTERNATING CURRENT CIRCUITS OF 10,000 AMPERES OR LESS

The current in a three-phase test circuit shall be checked by averaging the root mean-square (rms) values of the first complete cycle of current in each of the three phases, (see Figure 11-1). The current in a single-phase test circuit shall be checked by determining the root-mean square value of the first complete cycle, when the circuit is closed to produce an essentially symmetrical current waveform. The "DC component" is not to be additionally added to the value obtained when measured as shown. In order to obtain the desired symmetrical waveform of a single-phase test circuit, random or controlled closing shall be permitted to be used. A waveform is considered to be essentially symmetrical if the difference between the deflection below and above the zero trace in the first full cycle is not greater than 7 percent of the smaller deflection.The power factor shall be determined by referring the open-circuit voltage wave to the two adjacent zero points at the end half of the first complete current cycle by transposition through a suitable timing wave—the power factor to be computed as an average of the values obtained by using these two current zero points and the voltage to neutral to be used in the case of a three-phase circuit.

NEMA Standard 11-20-1986.

Copyright National Electrical Manufacturers Association
Provided by IHS under license with NEMA
No reproduction or networking permitted without license from IHS

Not for Resale

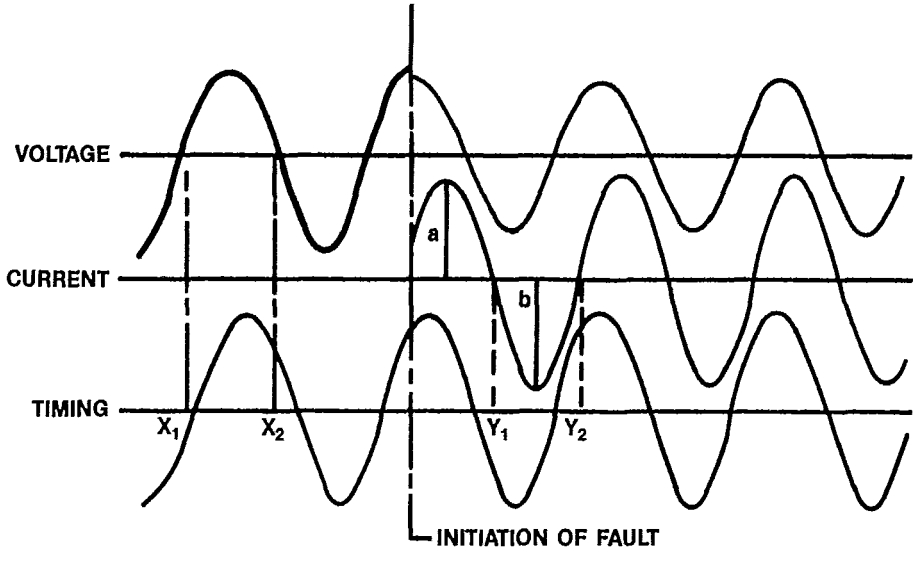

$$\text{Current} = \frac{a + b}{2} \times \text{rms calibration of instrument element}$$

$$\text{Power Factor} = \frac{\text{Cosine } [(Y_1 + X_1) \times 180^\circ] + \text{Cosine } [(Y_2 + X_2 \times 180^\circ]}{2}$$

Where X and Y values are fractions of the ½ cycle distance in which they occur

Figure 11-1
DETERMINATION OF CURRENT AND POWER FACTOR FOR CIRCUITS OF 10,000 AMPERES AND LESS

Copyright National Electrical Manufacturers Association
Provided by IHS under license with NEMA
No reproduction or networking permitted without license from IHS
Not for Resale

11.4 ALTERNATING CURRENT CIRCUITS OF GREATER THAN 10,000 AMPERES

The rms symmetrical current shall be determined by measuring the alternating-current component of the wave at an instant ½ cycle (on the basis of a 60 Hertz timing wave) after the initiation of the short circuit. The current shall be calculated in accordance with Figure 11-2.

For a three-phase test circuit, the rms symmetrical current shall be the average of the currents in the three phases. However, the rms symmetrical current in any one phase shall be less than 90 percent of the value of the test current.

For a single-phase circuit, closing to produce minimum asymmetry shall be permitted to be selected, but one test shall also be made at the closing angle which will produce maximum asymmetry since this is required for power factor determination.

The test circuit and its transients shall be such that (1) three cycles after initiation to the short circuit, the symmetrical alternating component of current will be not less than 90 percent of the symmetrical alternating component of current at the end of the first half-cycle, or (2) the symmetrical alternating component of current at the time at which the circuit breaker will interrupt the test circuit is at least 100 percent of the rating for which the circuit breaker is being tested. In three-phase circuits, the symmetrical, alternating component of current of all three-phases is to be averaged.

The power factor shall be determined at an instant one-half cycle after the short circuit occurs. The total asymmetrical rms amperes are to be measured in accordance with Figure 11-2 and the ratio M_A or M_M calculated as follows:

$$\text{Ratio } M_A \text{ (for 3Ø tests)} = \frac{\text{Av. 3 phases—Asymmetrical rms Amps.}}{\text{Av. 3 phases—Symmetrical rms Amps.}}$$

$$\text{Ratio } M_M \text{ (for 1Ø tests)} = \frac{\text{Asymmetrical rms Amps.}}{\text{Symmetrical rms Amps.}}$$

Using ratio M_A or M_M, the power factor is determined from Table 11-1.

NEMA Standard 11-20-1986.

11.5 RECOVERY VOLTAGE

The recovery voltage shall be at least equal to the rated voltage of the circuit breaker. The peak value of the recovery voltage within the first half full cycle after clearing and for the next five successive peaks shall be at least equal to 1.414 times the rms value of the rated voltage of the circuit breaker. Each of the peaks shall be displaced by not more than ±10 electrical degrees from the peak values of the open-circuit recovery voltage, that is, the displacement of the peak from its normal position on a sinusoidal wave. The average of the instantaneous values of recovery voltage of each of the first size half cycles measured at the 45-degree and 135-degree points on the wave shall be not less than 85 percent of the rms value of the rated voltage of the circuit breaker. The instantaneous value of recovery voltage measured at the 45-degree and 135-degree points of each of the first six half cycles in no case shall be less than 75 percent of the rms value of the rated voltage of the circuit breaker.

NEMA Standard 11-20-1986.

11.6 DIRECT CURRENT CALIBRATION

The prospective current is to be measured as the maximum amplitude at a time, after the start of current flow, of not less than 4 times the circuit time constant. Any overshoot above the time current curve (as on an oscillograph trace) is not to be considered. Measurements shall be made from the midpoint of the ripple if a ripple is present. The current shall be calculated in accordance with Figure 11-3.

NEMA Standard 11-20-1986.

Copyright National Electrical Manufacturers Association
Provided by IHS under license with NEMA
No reproduction or networking permitted without license from IHS
Not for Resale

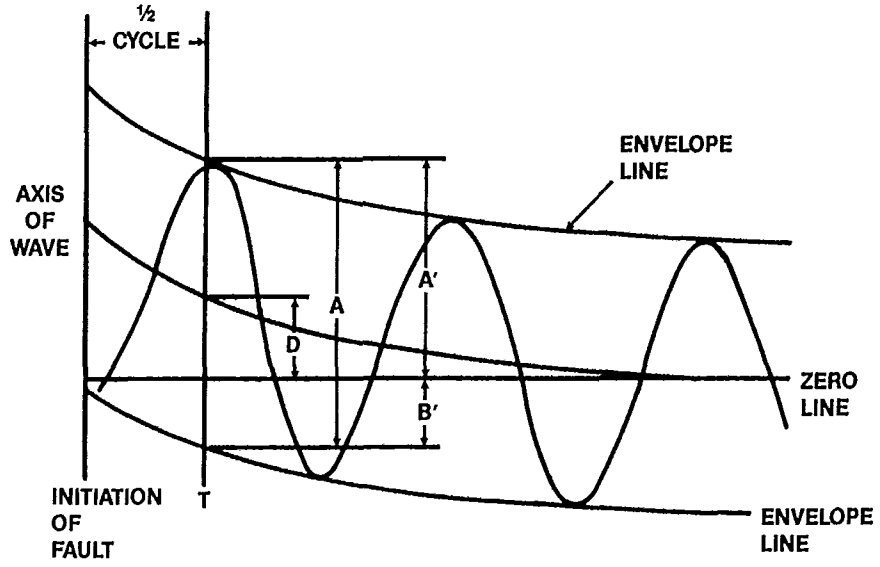

T = Time at which measurement is made
A = Peak-to-peak value of alternating current = A' + B'
A' = Major ordinate
B' = Minor ordinate
D = Direct component = $A' - \frac{A}{2}$

Symmetrical rms Amps. $= \frac{A}{2.828}$

Asymmetrical rms Amps. $= \sqrt{\left(\frac{A}{2.828}\right)^2 + D^2}$

Figure 11-2
DETERMINATION OF CURRENT AND POWER FACTOR FOR CIRCUIT OF GREATER THAN 10,000 AMPERES

Copyright National Electrical Manufacturers Association
Provided by IHS under license with NEMA
No reproduction or networking permitted without license from IHS
Not for Resale

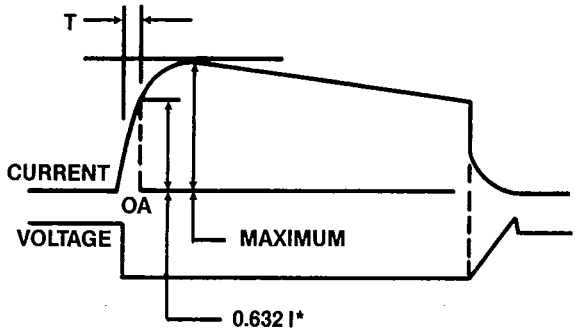

*The value of the time current is given by the abscissa OA corresponding to the ordinate 0.632 I of the oscillograph of the circuit calibration.

Figure 11-3
DIRECT CURRENT CALIBRATION
***I = E/R**

Table 11-1
SHORT-CIRCUIT POWER FACTOR FOR ALTERNATING CIRCUITS OF GREATER THAN I0,000 AMPERES

Short-Circuit Power Factor Percent	Ratio M_M	Ratio M_A	Short-Circuit Power Factor Percent	Ratio M_M	Ratio M_A
0	1.732	1.394	29	1.139	1.071
1	1.697	1.374	30	1.130	1.064
2	1.662	1.354	31	1.122	1.062
3	1.630	1.336	32	1.113	1.057
4	1.599	1.318	33	1.106	1.053
5	1.569	1.302	34	1.098	1.050
6	1.540	1.286	35	1.091	1.046
7	1.512	1.271	36	1.085	1.043
8	1.486	1.256	37	1.079	1.040
			38	1.073	1.037
9	1.461	1.242	39	1.068	1.034
10	1.437	1.229	40	1.062	1.031
11	1.413	1.216	41	1.058	1.029
12	1.391	1.204	42	1.053	1.027
13	1.370	1.193	43	1.049	1.024
14	1.350	1.182	44	1.045	1.023
15	1.331	1.172	45	1.041	1.021
16	1.312	1.162	46	1.038	1.019
17	1.295	1.152	47	1.035	1.017
18	1.278	1.144	48	1.032	1.016
19	1.262	1.135	49	1.029	1.014
20	1.247	1.127	50	1.026	1.013
21	1.232	1.119	55	1.016	1.008
22	1.219	1.112	60	1.009	1.004
23	1.205	1.105	65	1.005	1.002
24	1.193	1.099	70	1.002	1.001
25	1.181	1.092	75	1.0008	1.0004
26	1.170	1.087	80	1.0002	1.0001
27	1.159	1.081	85	1.00004	1.00002
28	1.149	1.076	100	1.00000	1.00000

Copyright National Electrical Manufacturers Association
Provided by IHS under license with NEMA
No reproduction or networking permitted without license from IHS
Not for Resale

Section 12

CLEARANCES AND CREEPAGE DISTANCES FOR CIRCUIT-BREAKERS

12.1 Spacings shall not be less than those indicated in Tables 12-1, 12-2, and 12-3. "Grounded metal" includes circuit breaker mounting screws and fittings for the connection of a wiring system. A "terminal" includes the terminal proper and associated metal having the same degrees of exposure or accessibility. Spacings shall be measured between the bare portions of insulated conductors.

NEMA Standard 11-20-1986.

12.2 The spacings of a circuit breaker or molded case switch shall be measured with the device wired with conductors of the ampacity corresponding to the maximum rating of the breaker frame.

NEMA Standard 11-20-1986.

12.3 An insulated barrier or liner shall be permitted to be used as the separation between uninsulated live metal parts and grounded dead metal parts (including a metal enclosure) or between uninsulated live metal parts of opposite polarity. In addition, this barrier or liner shall be permitted to be used in conjunction with an air space.

NEMA Standard 11-20-1986.

Table 12-1
MINIMUM SPACINGS*
Minimum Spacing in (MM) Inches

Voltage Between Parts U_e	At Terminals				Other Than at Terminals					
	Between Terminals of Opposite Polarity A		[a]Between Terminals and Any Ground Metal B		Between Uninsulated Live Parts of Opposite Polarity C		[a]Between Uninsulated Live Parts and Any Ground Metal			
							D[b]		E[c]	
	Through Air	Over Surface	Through Air	Over Surface	Through Air	Over Surface	Through Air	Over Surface	Through Air	Over Surface
0–125	½ (12.7)	¾ (19.05)	½ (12.7)	½ (12.7)	¼ (6.35)	3/8 (9.52)	½ (12.7)	½ (12.7)	¼ (6.35)	3/8 (9.52)
126–300	¾ (19.05)	1¼ (31.75)	½ (12.7)	½ (12.7)	¼ (6.35)	3/8 (9.52)	½ (12.7)	½ (12.7)	¼ (6.35)	3/8 (9.52)
301–600	1 (25.4)	2 (50.8)	½ (12.7)	1 (25.4)	3/8 (9.52)	½ (12.7)	½ (12.7)	1 (25.4)	3/8 (9.52)	½ (12.7)

[a] The spacing to the enclosure or circuit breaker mounting means shall be permitted to be reduced if an acceptable liner of insulating material, not less than 1/32 inch in thickness, is used to provide the required spacing through air.

[b] If indentation or deformation of the overall enclosure or circuit breaker mounting means might reduce spacings to less than those indicated in Column E.

[c] If indentation or deformation of the overall enclosure or circuit breaker mounting means will not affect spacings.

* For spacings on control circuit printed wiring assemblies with conformal coating, see Table 12-2. For spacings for accessories, see Table 12-3.

Copyright National Electrical Manufacturers Association
Provided by IHS under license with NEMA
No reproduction or networking permitted without license from IHS
Not for Resale

Table 12-2
MINIMUM OPPOSITE POLARITY SPACINGS ON CONTROL CIRCUIT PRINTED-WIRING ASSEMBLIES WITH CONFORMAL COATINGS[a] IN INCHES (mm)

Voltage Between Parts	Power Available	Minimum Spacings
0–600	Unlimited	1/32 (0.8)
0–30	Limited	1/64 (0.4)

[a] Minimum spacing between live parts of opposite polarity. Spacing between live parts and dead metal shall comply with Table 12-1.

Table 12-3
MINIMUM ACCEPTABLE SPACING IN INCHES FOR ACCESSORIES (mm)

Location		Potential Involved in V		
		0–125	125–300	301–600
Between any uninsulated live part and uninsulated live parts of opposite polarity, uninsulated grounded part other than the enclosure, or exposed metal parts.	Through Air	1/8 (3.2)	1/4 (6.4)	3/8 (9.5)
	Over Surface	1/4 (6.4)	3/8 (9.5)	1/2 (12.7)

Copyright National Electrical Manufacturers Association
Provided by IHS under license with NEMA
No reproduction or networking permitted without license from IHS
Not for Resale

Appendix A
DETERMINATION OF SHORT-CIRCUIT CURRENTS IN LOW-VOLTAGE SYSTEMS

(Approved as Authorized Engineering Information 11-14-1974.)

In order to determine the interrupting capacity requirements for low-voltage air circuit breakers, it is necessary to obtain certain information, at the point of application, of the short-circuit condition that exists in every part of a distribution system.

Part A
THREE-PHASE SYSTEMS

The circuit diagram shown in Fig. A-1 includes the factors which are usually considered in the calculation of short-circuit currents. The calculations were made for a system, as shown in Fig. A-1, for various transformer kVA ratings and secondary voltages in combination with common sizes and various lengths of cable. The calculations were based on those covered in AIEE (now IEEE) Transaction Paper No. 55-442 and the results are shown in Tables A-3 through A-10.

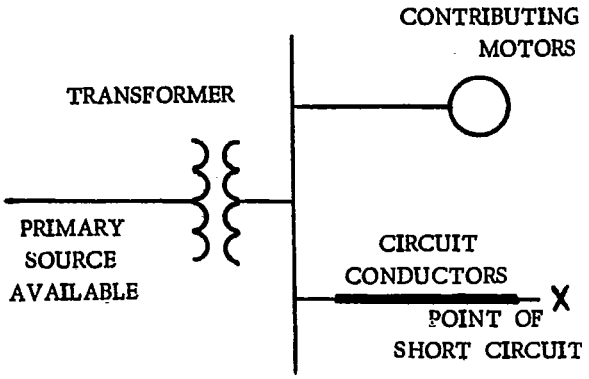

Fig. A-1
CIRCUIT INVESTIGATED

Referring to Fig. A-1, the following basic characteristics were used in the study:

1. Primary source available is assumed as 1000 MVA at the primary of the transformer, with a source circuit X/R ratio of 25.

2. Transformer kVA sizes shown in Table A-1.

3. Distribution voltages of 208, 240, 480 and 600 volts, three-phase, 60 hertz.

4. Tables A-3 through A-10 are based on the transformer impedances shown in Table A-1. Impedances of transformers rated 150 kVA through 500 kVA are the minimum specified by standards. The impedances of transformers rated 750 kVA through 2000 kVA are 5.75 percent of the nominal, minus the 7.5 percent tolerance. X/R ratios are not specified by NEMA Standards and have been selected from data furnished by manufacturers.

5. Motor contribution: for system voltages of 120 and 120/208 volts, it is usual to assume that the connected load consists of 50 percent lighting and 50 percent motor load. This corresponds to an equivalent symmetrical contribution of twice the full connected load. For system voltages of 240 to 600 volts, it is usual to assume that the connected load consists of 100 percent motor load and, in the absence of exact information, that 25 percent of the motors are synchronous motors and 75 percent are induction motors. This corresponds to an equivalent symmetrical contribution of four times the full connected load. Short-circuit calculations were based on a motor impedance of X/R ratio of 6.

6. Feeder conductors chosen are the size normally used for standard frame sizes of low-voltage air circuit breakers. Calculations are based on three-phase conductors at 75°C in magnetic ducts. Tables A-3 through A-10 are calculations made for copper conductors having the characteristics shown in Table A-2. The characteristics of aluminum conductors, when compared on the basis of equivalent ampacity, are so similar to copper

Copyright National Electrical Manufacturers Association
Provided by IHS under license with NEMA
No reproduction or networking permitted without license from IHS
Not for Resale

conductors that calculations for aluminum conductors are not included. In general, the impedances of aluminum conductors are slightly higher than those of equivalent copper conductors and the available short-circuit current amperes are slightly lower.

7. The available short-circuit current can be read directly when the transformer kVA, wire size and distance from the transformer are known by simply referring to the corresponding values listed in Tables A-3 through A-10.

Part B
SINGLE-PHASE, 3-WIRE, 120/240-VOLT SYSTEMS

The circuit diagram shown in Fig. A-2 includes the factors which are usually considered in the calculation of short-circuit currents. The calculations were made for a system, as shown in Fig. A-2, for the various transformer kVA ratings given in Table A-11 in combination with common sizes and various lengths of cables. Cable impedances are shown in Table A-12.

Referring to Fig. A-2, the following basic characteristics were used in the study:

1. Primary source available is assumed to be a line-to-ground transformer primary connection near a primary substation, where the planned maximum future available short-circuit duty corresponds to a 20 000-ampere symmetrical rms current on a 34 500-volt system, with an assumed source circuit X/R ratio of 25.

2. Transformer kVA sizes shown in Table A-11.

3. Tables A-13 through A-19 are based on the transformer impedances shown in Table A-11 which is based on typical distribution transformer data from which the impedances are the smallest of those listed for transformers with at least 7200/12470Y-volt primary voltage ratings and are based on the full 240-volt secondary winding rated kVA. R and X for a 120-volt half-winding short circuit, based on full rated kVA, are calculated as 1.5 and 1.2 times the tabulated full winding R and X, respectively.

4. Conductors chosen are the sizes normally used for 120/240-volt services. Calculations are based on triplexed conductors having the characteristics shown in Table A-12.

5. The available short-circuit current can be read directly, when the transformer kVA, wire size and distance from the transformer are known by simply referring to the corresponding values listed in Tables A-13 through A-19.

   These tables are intended primarily for estimating the short-circuit currents available at residential locations and, therefore, do not include motor contribution which is considered to be minimal and not a significant factor.

Copyright National Electrical Manufacturers Association
Provided by IHS under license with NEMA
No reproduction or networking permitted without license from IHS
Not for Resale

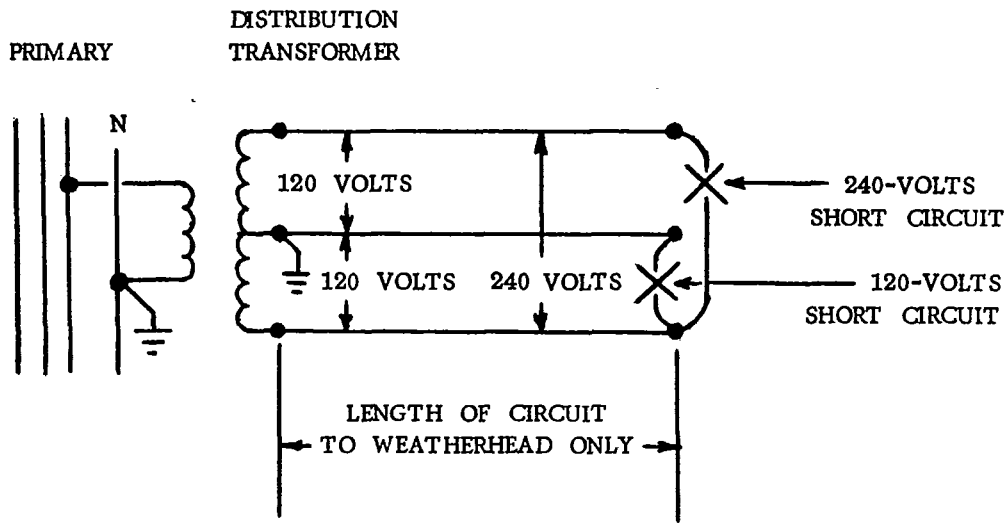

Fig. A-2
CIRCUIT INVESTIGATED

Table A-1
Transformer Impedances

(Based on the NEMA Standards Publication for Secondary Unit Substations, Publication No. 210-1970.)

Three-phase kVA	Percent Impedance R	X	Z	X/R Ratio	Short-circuit Table
150	1.109	1.664	2.0	1.5	A-3
225	1.109	1.664	2.0	1.5	A-4
300	1.236	4.327	4.5	3.5	A-5
500	1.131	4.356	4.5	3.85	A-6
750	0.9685	5.230	5.32	5.4	A-7
1000	0.9270	5.237	5.32	5.65	A-8
1500	0.8604	5.249	5.32	6.10	A-9
2000	0.7968	5.259	5.32	6.60	A-10

The data in Table A-1 is based on liquid-filled self-cooled transformers. Dry-type transformers have, in general, higher reactances and the results of this study should also be conservative for systems in which they are used.

Copyright National Electrical Manufacturers Association
Provided by IHS under license with NEMA
No reproduction or networking permitted without license from IHS
Not for Resale

Table A-2
Copper and Aluminum Feeder or Branch Circuit Impedances

The following impedances are for three-phase conductors in magnetic conduit.

The ampacities given are for Type T or TW for wire sizes up through 8 AWG for copper and 6 AWG for aluminum, and Type THW or RHW for larger sizes. Units of R and X are in ohms per 1000 feet at 60 hertz.

Probable Design Ampacity	Copper Feeders				Aluminum Feeders			
	Size, AWG or MCM	Ampacity	R	X	Size, AWG or MCM	Ampacity	R	X
15	14	15	3.065	0.0423	12	15	3.185	0.0396
20	12	20	1.932	0.0396	10	25	2.000	0.0371
30	10	30	1.214	0.0371	8	30	1.257	0.0389
40	8	40	0.7638	0.0389	6	40	0.8071	0.0401
60	6	65	0.4890	0.0401	4	65	0.5077	0.0378
75	4	85	0.3089	0.0378	2	90	0.3185	0.0359
100	2	115	0.1952	0.0359	1/0	120	0.2012	0.0350
125	1	130	0.1554	0.0360	2/0	135	0.1593	0.0342
150	1/0	150	0.1241	0.0350	3/0	155	0.1270	0.0334
175	2/0	175	0.09963	0.0342	4/0	180	0.1011	0.0326
200	3/0	200	0.07963	0.0334	250	205	0.08648	0.0328
400	Two 3/0	400	0.03981	0.0167	Two 250	410	0.04324	0.0164
225	4/0	230	0.06374	0.0326	300	230	0.07207	0.0321
250	250	255	0.05449	0.0328	350	250	0.06229	0.0315
500	Two 250	510	0.02724	0.0164	Two 350	500	0.03114	0.01575
800	Three 300	855	0.01531	0.0107	Three 400	810	0.01835	0.01033
300	350	310	0.03966	0.0315	500	310	0.04493	0.0301
600	Two 350	620	0.01983	0.01575	Two 500	620	0.02246	0.01505
900	Three 350	930	0.01322	0.0105	Three 500	930	0.01498	0.01003
1000	Three 400	1005	0.01181	0.01033	Three 600	1020	0.01272	0.00997
350	500	380	0.02911	0.0301	750	385	0.03165	0.0290
700	Two 500	760	0.01455	0.01505	Two 750	770	0.01582	0.0145
450	750	475	0.02078	0.0290	1250	485	0.02160	0.0273
1600	Four 750	1900	0.00519	0.00725	Four 1250	1940	0.00540	0.006825

Copyright National Electrical Manufacturers Association
Provided by IHS under license with NEMA
No reproduction or networking permitted without license from IHS
Not for Resale

Copyright National Electrical Manufacturers Association
Provided by IHS under license with NEMA
No reproduction or networking permitted without license from IHS
Not for Resale

Table A-3

Symmetrical Three-phase Bolted Short-circuit Currents in Amperes at Various Distances From a Liquid-filled Transformer

Rated 150 kVA, Z = 2.00 Percent

Transformer Secondary Voltage	Distance, Feet	Wire Size of Copper Conductors																							
		14 AWG	12 AWG	10 AWG	8 AWG	6 AWG	4 AWG	2 AWG	1 AWG	1/0 AWG	2/0 AWG	3/0 AWG	Two 3/0 AWG	4/0 AWG	250 MCM	Two 250 MCM	Three 300 MCM	350 MCM	Two 350 MCM	Three 350 MCM	Three 400 MCM	500 MCM	Two 500 MCM	750 MCM	Four 750 MCM
208 Volts	0	21451	21451	21451	21451	21451	21451	21451	21451	21451	21451	21451	21451	21451	21451	21451	21451	21451	21451	21451	21451	21451	21451	21451	21451
	5	6324	8834	11634	14271	16345	17932	19012	19390	19704	19951	21055	20787	20320	20407	20918	21125	20569	21002	21150	21166	20692	21065	20790	21282
	10	3526	5241	7512	10166	12754	15105	16911	17583	18149	18601	18979	20155	19287	19450	20407	20808	19754	20569	20856	20889	19984	20692	20168	21115
	25	1503	2325	3549	5260	7378	9894	12397	13499	14490	15332	16065	18433	16680	17015	19001	19908	17639	19368	20019	20096	18120	19648	18506	20631
	50	767	1202	1874	2877	4247	6125	8375	9531	10664	11706	12677	16065	13533	14022	17015	18558	14945	17639	18757	18896	15675	18120	16272	19871
	100	387	611	963	1503	2281	3435	5000	5906	6871	7840	8819	12677	9748	10313	14022	16319	11418	14945	16643	16871	12332	15675	13106	18506
	200	194	308	487	768	1181	1821	2747	3325	3976	4675	5432	8819	6203	6705	10313	13107	7732	11418	13555	13874	8636	12332	9434	16272
	500	78	123	196	311	482	754	1164	1432	1746	2101	2507	4551	2948	3254	5701	8186	3915	6654	8667	9021	4540	7508	5125	11944
	1000	39	62	98	156	243	381	593	734	901	1093	1319	2507	1570	1749	3254	5014	2145	3915	5397	5685	2534	4540	2910	8275
	2000	19	31	49	78	121	191	299	371	458	558	677	1319	811	908	1749	2820	1126	2145	3071	3264	1345	2534	1560	5125
	5000	7	12	19	31	48	77	120	149	185	226	275	544	331	371	732	1218	464	910	1338	1432	558	1089	652	2392
240 Volts	0	19257	19257	19257	19257	19257	19257	19257	19257	19257	19257	19257	19257	19257	19257	19257	19257	19257	19257	19257	19257	19257	19257	19257	19257
	5	6883	9328	11845	14021	15615	16779	17549	17815	18035	18208	18350	18795	18465	18525	18885	19030	18639	18943	19047	19058	18724	18987	18792	19139
	10	3953	5772	8058	10540	12769	14650	16013	16505	16914	17239	17508	18350	17727	17841	18525	18808	18057	18639	18841	18864	18220	18724	18349	19022
	25	1716	2636	3975	5785	7908	10262	12428	13328	14116	14769	15328	17110	15790	16038	17516	18169	16500	17778	18247	18301	16854	17977	17137	18680
	50	881	1375	2132	3241	4716	6652	8833	9892	10896	11789	12597	15328	13293	13681	16038	17188	14409	16500	17332	17432	14977	16854	15437	18135
	100	446	702	1103	1715	2582	3842	5488	6406	7356	8281	9187	12597	10022	10516	13681	15497	11468	14409	15742	15913	12239	14977	12880	17137
	200	224	354	561	881	1351	2068	3090	3712	4403	5128	5896	9187	6658	7142	10516	12916	8115	11468	13279	13536	8950	12239	9674	15437
	500	90	142	226	358	555	864	1329	1630	1981	2372	2815	4991	3290	3614	6147	8554	4305	7075	8995	9316	4947	7888	5537	11895
	1000	45	71	113	180	279	438	681	841	1031	1248	1501	2815	1780	1977	3614	5445	2411	4305	5827	6113	2832	4947	3233	8603
	2000	22	35	56	90	140	221	344	427	526	640	775	1501	927	1036	1977	3145	1281	2411	3412	3616	1526	2832	1764	5537
	5000	9	14	22	36	56	88	138	172	213	260	316	624	380	427	837	1385	532	1038	1519	1623	640	1240	746	2676
480 Volts	0	9628	9628	9628	9628	9628	9628	9628	9628	9628	9628	9628	9628	9628	9628	9628	9628	9628	9628	9628	9628	9628	9628	9628	9628
	5	7068	7922	8520	8906	9145	9306	9408	9442	9471	9493	9512	9570	9527	9535	9581	9600	9549	9589	9602	9603	9560	9594	9569	9613
	10	5317	6521	7510	8218	8677	8991	9192	9260	9317	9361	9397	9512	9427	9442	9535	9571	9471	9549	9575	9578	9493	9560	9511	9599
	25	2909	4054	5319	6497	7412	8105	8574	8737	8873	8979	9067	9341	9138	9175	9397	9487	9245	9433	9497	9504	9298	9460	9340	9554
	50	1625	2413	3452	4656	5818	6863	7656	7949	8195	8391	8555	9067	8688	8758	9175	9349	8889	9245	9369	9384	8988	9298	9067	9482
	100	858	1318	1987	2892	3954	5131	6214	6664	7058	7384	7664	8555	7895	8019	8758	9084	8250	8889	9123	9150	8427	8988	8568	9340
	200	440	687	1066	1620	2358	3326	4416	4946	5448	5894	6298	7664	6646	6840	8019	8594	7204	8250	8666	8716	7488	8427	7718	9067
	500	178	282	444	693	1052	1583	2300	2714	3154	3593	4035	5771	4453	4706	6366	7382	5199	6772	7523	7623	5605	7092	5947	8339
	1000	89	142	225	354	545	839	1266	1531	1830	2150	2495	4035	2846	3073	4706	5956	3537	5199	6154	6295	3944	5605	4301	7353
	2000	45	71	113	179	277	432	664	815	990	1186	1407	2495	1645	1807	3073	4277	2152	3537	4497	4658	2473	3944	2768	5947
	5000	18	28	45	72	112	176	273	338	415	504	608	1155	723	805	1497	2302	988	1799	2476	2607	1166	2084	1338	3778
600 Volts	0	7703	7703	7703	7703	7703	7703	7703	7703	7703	7703	7703	7703	7703	7703	7703	7703	7703	7703	7703	7703	7703	7703	7703	7703
	5	6326	6809	7130	7331	7454	7537	7589	7607	7622	7633	7643	7673	7650	7654	7678	7688	7662	7682	7689	7690	7668	7685	7672	7695
	10	5196	5994	6579	6967	7210	7373	7477	7513	7542	7565	7584	7643	7599	7607	7654	7673	7622	7662	7675	7677	7633	7668	7642	7687
	25	3216	4227	5192	5971	6514	6900	7151	7237	7308	7364	7410	7554	7447	7467	7583	7630	7503	7602	7635	7639	7531	7616	7553	7665
	50	1909	2732	3709	4697	5523	6182	6642	6805	6940	7046	7135	7410	7206	7244	7467	7558	7314	7503	7569	7576	7367	7531	7409	7627
	100	1040	1568	2294	3191	4126	5031	5762	6042	6279	6470	6631	7135	6762	6831	7244	7419	6960	7314	7439	7454	7059	7367	7137	7553
	200	542	839	1281	1900	2665	3573	4474	4869	5224	5524	5785	6631	6003	6122	6831	7153	6343	6960	7192	7220	6513	7059	6650	7409
	500	222	349	547	845	1262	1852	2592	2988	3388	3766	4126	5430	4450	4638	5816	6454	4996	6072	6537	6595	5282	6270	5517	7009
	1000	112	176	279	437	667	1015	1499	1787	2100	2422	2755	4126	3079	3280	4638	5537	3677	4996	5667	5759	4012	5282	4297	6430
	2000	56	89	141	222	343	531	808	983	1183	1401	1642	2755	1891	2056	3280	4295	2398	3677	4464	4586	2705	4012	2979	5517
	5000	22	35	56	89	139	218	338	417	510	616	738	1364	872	966	1731	2549	1170	2042	2714	2835	1366	2326	1551	3869

AB 1-86 6470247 0000373 7

Copyright National Electrical Manufacturers Association
Provided by IHS under license with NEMA
No reproduction or networking permitted without license from IHS
Not for Resale

Table A-4

Symmetrical Three-phase Bolted Short-circuit Currents in Amperes at Various Distances From a Liquid-filled Transformer
Rated 225 kVA, Z = 2.00 Percent

Transformer Secondary Voltage	Distance, Feet	Wire Size of Copper Conductors																							
		14 AWG	12 AWG	10 AWG	8 AWG	6 AWG	4 AWG	2 AWG	1 AWG	1/0 AWG	2/0 AWG	3/0 AWG	Two 3/0 AWG	4/0 AWG	250 MCM	Two 250 MCM	Three 300 MCM	350 MCM	Two 350 MCM	Three 350 MCM	Three 400 MCM	500 MCM	Two 500 MCM	750 MCM	Four 750 MCM
208 Volts	0	32080	32080	32080	32080	32080	32080	32080	32080	32080	32080	32080	32080	32080	32080	32080	32080	32080	32080	32080	32080	32080	32080	32080	32080
	5	6800	9890	13734	17861	21527	24599	26817	27617	28284	28812	29251	30614	29607	29795	30900	31356	30146	31084	31409	31447	30412	31224	30622	31702
	10	3655	5553	8235	11683	15469	19355	22669	23982	25110	26029	26807	29251	27445	27786	29795	30662	28421	30146	30765	30837	28906	30412	29292	31334
	25	1525	2378	3681	5584	8098	11371	15022	16781	18443	19916	21247	25711	22390	23028	26871	28740	24224	27628	28975	29139	25157	28206	25913	30279
	50	773	1216	1908	2963	4454	6609	9405	10953	12550	14097	15608	21247	16995	17816	23028	25995	19393	24224	26396	26677	20670	25157	21734	28669
	100	389	614	971	1525	2335	3571	5322	6385	7561	8791	10089	15608	11374	12188	17816	21776	13820	19393	22374	22798	15219	20670	16431	25913
	200	195	309	490	773	1195	1856	2836	3463	4186	4981	5870	10089	6804	7432	12188	16374	8751	13820	17102	17629	9953	15219	11042	21734
	500	78	124	197	312	485	760	1179	1456	1784	2158	2593	4851	3073	3412	6215	9326	4157	7392	9973	10455	4878	8483	5565	14645
	1000	39	62	98	156	243	382	597	740	911	1108	1342	2593	1604	1793	3412	5414	2215	4157	5870	6218	2636	4878	3046	9436
	2000	19	31	49	78	122	192	300	373	460	562	683	1342	820	919	1793	2940	1145	2215	3217	3432	1373	2636	1599	5565
	5000	7	12	19	31	48	77	120	150	185	226	276	548	332	373	739	1239	467	922	1365	1463	563	1108	659	2484
240 Volts	0	28802	28802	28802	28802	28802	28802	28802	28802	28802	28802	28802	28802	28802	28802	28802	28802	28802	28802	28802	28802	28802	28802	28802	28802
	5	7547	10727	14434	18098	21097	23454	25081	25654	26128	26502	26812	27780	27062	27193	27977	28297	27440	28105	28334	28360	27627	28202	27775	28538
	10	4138	6214	9040	12476	15982	19307	21945	22943	23787	24464	25031	26812	25493	25737	27193	27808	26194	27440	27880	27931	26542	27627	26818	28279
	25	1747	2712	4166	6240	8880	12136	15518	17054	18458	19665	20728	24212	21623	22114	25061	26430	23030	25611	26597	26714	23736	26030	24305	27529
	50	888	1395	2182	3366	5010	7316	10172	11682	13191	14604	15942	20728	17136	17824	22114	24395	19130	23030	24691	24899	20168	23736	21021	26364
	100	448	707	1115	1747	2661	4036	5935	7057	8271	9508	10779	15942	12003	12758	17824	21101	14245	19130	21570	21901	15489	20168	16548	24305
	200	225	356	564	889	1371	2120	3217	3908	4695	5549	6485	10779	7450	8085	12758	16552	9398	14245	17175	17621	10566	15489	11605	21021
	500	90	143	227	359	558	873	1351	1665	2035	2453	2937	5401	3485	3833	6827	9979	4635	8026	10603	11065	5400	9115	6120	14956
	1000	45	71	113	180	280	440	686	850	1045	1270	1534	2937	1829	2040	3833	5979	2510	4635	6454	6813	2974	5400	3423	10097
	2000	22	35	56	90	140	221	346	429	530	646	784	1534	940	1053	2040	3313	1309	2510	3615	3848	1566	2974	1819	6120
	5000	9	14	22	36	56	88	139	172	213	261	318	630	382	429	848	1416	537	1056	1557	1668	647	1266	756	2805
480 Volts	0	14401	14401	14401	14401	14401	14401	14401	14401	14401	14401	14401	14401	14401	14401	14401	14401	14401	14401	14401	14401	14401	14401	14401	14401
	5	9130	10746	11973	12805	13330	13685	13911	13987	14051	14101	14142	14270	14175	14192	14296	14337	14225	14312	14342	14345	14249	14325	14269	14368
	10	6288	8184	9955	11355	12317	12996	13436	13587	13711	13809	13890	14142	13955	13988	14192	14274	14052	14225	14283	14289	14101	14249	14139	14334
	25	3133	4549	6300	8161	9796	11151	12120	12467	12756	12984	13174	13766	13327	13408	13889	14066	13559	13968	14109	14125	13673	14028	13764	14236
	50	1685	2559	3791	5366	7062	8826	10295	10872	11367	11767	12106	13174	12383	12530	13408	13784	12805	13559	13829	13860	13015	13673	13182	14075
	100	873	1356	2083	3120	4440	6068	7759	8527	9229	9832	10364	12106	10611	11057	12530	13215	11515	12805	13298	13357	11868	13015	12152	13764
	200	444	697	1091	1683	2505	3658	5086	5841	6595	7302	7971	10364	8568	8912	11057	12197	9565	11515	12345	12449	10084	11868	10510	13182
	500	179	283	448	704	1077	1646	2451	2939	3477	4038	4628	7127	5210	5577	8113	9676	6311	8813	10139	10326	6937	9377	7478	11696
	1000	90	142	226	357	551	856	1308	1596	1928	2293	2700	4628	3127	3413	5577	7463	4013	6311	7788	8022	4557	6937	5048	9845
	2000	45	71	113	179	279	436	675	832	1017	1226	1468	2700	1732	1916	3413	4989	2317	4013	5301	5532	2700	4557	3060	7478
	5000	18	28	45	72	112	176	275	341	420	511	619	1195	739	826	1571	2489	1021	1913	2696	2856	1214	2343	1402	4343
600 Volts	0	11520	11520	11520	11520	11520	11520	11520	11520	11520	11520	11520	11520	11520	11520	11520	11520	11520	11520	11520	11520	11520	11520	11520	11520
	5	8572	9563	10251	10695	10968	11152	11268	11308	11340	11366	11387	11454	11404	11413	11467	11488	11430	11475	11490	11492	11443	11481	11453	11503
	10	6510	7933	9087	9904	10431	10791	11021	11099	11164	11214	11256	11387	11290	11307	11413	11455	11341	11430	11460	11463	11366	11443	11386	11486
	25	3602	4994	6511	7903	8970	9773	10312	10499	10654	10776	10877	11192	10958	11001	11255	11358	11081	11297	11370	11379	11141	11328	11189	11436
	50	2022	2994	4264	5718	7102	8329	9251	9590	9874	10099	10288	10877	10440	10521	11001	11200	10671	11081	11224	11240	10786	11141	10877	11352
	100	1070	1641	2469	3580	4870	6283	7564	8091	8552	8931	9256	10288	9523	9666	10521	10896	9933	10671	10941	10972	10138	10786	10301	11189
	200	550	858	1328	2016	2924	4107	5424	6057	6654	7182	7657	9256	8065	8291	9666	10331	8716	9933	10414	10472	9047	10138	9314	10877
	500	223	352	554	865	1311	1969	2852	3358	3894	4426	4959	7034	5460	5762	7734	8924	6348	8210	9089	9204	6830	8584	7235	10035
	1000	112	177	281	442	680	1047	1576	1904	2272	2665	3068	4959	3515	3791	5762	7249	4353	6348	7482	7648	4842	6830	5272	8889
	2000	56	89	141	223	346	539	829	1016	1233	1476	1750	3088	2042	2241	3791	5245	2665	4353	5509	5701	3057	4842	3417	7235
	5000	22	35	56	90	140	219	342	422	519	629	758	1437	902	1004	1860	2849	1229	2231	3061	3221	1450	2581	1662	4642

AB 1-84 6470247 0003749

Copyright National Electrical Manufacturers Association
Provided by IHS under license with NEMA
No reproduction or networking permitted without license from IHS
Not for Resale

Table A-5

Symmetrical Three-phase Bolted Short-circuit Currents in Amperes at Various Distances From a Liquid-filled Transformer

Rated 300 kVA, Z = 4.50 Percent

Transformer Secondary Voltage	Distance, Feet	Wire Size of Copper Conductors																							
		14 AWG	12 AWG	10 AWG	8 AWG	6 AWG	4 AWG	2 AWG	1 AWG	1/0 AWG	2/0 AWG	3/0 AWG	Two 3/0 AWG	4/0 AWG	250 MCM	Two 250 MCM	Three 300 MCM	350 MCM	Two 350 MCM	Three 350 MCM	Three 400 MCM	500 MCM	Two 500 MCM	750 MCM	Four 750 MCM
208 Volts	0	20041	20041	20041	20041	20041	20041	20041	20041	20041	20041	20041	20041	20041	20041	20041	20041	20041	20041	20041	20041	20041	20041	20041	20041
	5	6694	9431	12376	14910	16656	17822	18517	18736	18915	19050	19160	19598	19247	19288	19660	19802	19374	19703	19815	19824	19442	19738	19495	19902
	10	3658	5509	7985	10824	13418	15537	16953	17418	17794	18078	18306	19160	18485	18568	19288	19568	18741	19374	19593	19611	18874	19442	18977	19765
	25	1529	2385	3680	5520	7806	10459	12923	13911	14755	15425	15973	17892	16406	16617	18221	18887	17025	18436	18949	18992	17332	18601	17568	19363
	50	774	1219	1913	2963	4419	6430	8804	9975	11085	12058	12915	15973	13627	13997	16617	17825	14692	17025	17946	18030	15215	17332	15616	18728
	100	389	615	973	1528	2335	3547	5200	6150	7152	8134	9096	12915	9971	10471	13997	15960	11422	14692	16181	16335	12165	15215	12748	17568
	200	195	309	490	775	1196	1854	2816	3416	4093	4815	5588	9096	6358	6842	10471	13080	7809	11422	13430	13675	8620	12165	9292	15616
	500	78	124	197	312	485	760	1177	1450	1772	2134	2549	4669	2996	3301	5814	8302	3954	6727	8740	9055	4557	7512	5099	11668
	1000	39	62	98	156	243	383	597	739	908	1103	1331	2549	1585	1764	3301	5088	2160	3954	5457	5732	2543	4557	2904	8176
	2000	19	31	49	78	122	192	300	373	460	560	680	1331	815	912	1764	2849	1130	2160	3098	3287	1348	2543	1559	5099
	5000	7	12	19	31	48	77	120	150	185	226	275	546	331	372	734	1224	465	913	1344	1437	559	1091	652	2389
240 Volts	0	18805	18805	18805	18805	18805	18805	18805	18805	18805	18805	18805	18805	18805	18805	18805	18805	18805	18805	18805	18805	18805	18805	18805	18805
	5	7404	10132	12822	14930	16283	17154	17665	17824	17956	18056	18137	18470	18202	18232	18516	18624	18297	18548	18633	18640	18348	18574	18388	18699
	10	4148	6157	8711	11420	13681	15391	16476	16823	17103	17315	17484	18137	17617	17679	18232	18445	17809	18297	18464	18477	17910	18348	17988	18594
	25	1755	2725	4169	6160	8507	11041	13202	14017	14697	15225	15651	17164	15986	16145	17410	17923	16460	17572	17969	18002	16698	17697	16880	18287
	50	891	1400	2191	3371	4970	7091	9444	10536	11536	12382	13106	15651	13694	13992	16145	17097	14554	16460	17189	17253	14975	16698	15296	17794
	100	449	709	1119	1753	2664	4010	5787	6770	7778	8734	9641	13106	10442	10884	13992	15608	11718	14554	15780	15901	12358	14975	12855	16880
	200	225	356	565	891	1374	2120	3195	3854	4586	5349	6148	9641	6924	7398	10884	13193	8331	11718	13483	13686	9093	12358	9712	15296
	500	90	143	227	360	558	874	1350	1660	2022	2426	2884	5183	3372	3700	6354	8822	4392	7259	9230	9522	5019	8018	5572	11897
	1000	45	71	113	180	280	441	686	849	1043	1264	1522	2884	1806	2005	3700	5594	2442	4392	5969	6245	2860	5019	3249	8647
	2000	22	35	56	90	140	221	346	429	529	644	781	1522	934	1045	2005	3203	1291	2442	3471	3673	1535	2860	1769	5572
	5000	9	14	22	36	56	88	139	172	213	261	317	628	381	428	842	1397	534	1044	1532	1636	641	1246	747	2687
480 Volts	0	9402	9402	9402	9402	9402	9402	9402	9402	9402	9402	9402	9402	9402	9402	9402	9402	9402	9402	9402	9402	9402	9402	9402	9402
	5	7549	8282	8728	8981	9121	9210	9265	9282	9297	9309	9318	9360	9326	9330	9366	9380	9338	9370	9381	9382	9344	9373	9349	9389
	10	5783	7023	7930	8492	8809	9007	9123	9160	9191	9215	9235	9318	9251	9258	9330	9357	9274	9338	9359	9361	9287	9344	9297	9376
	25	3106	4387	5775	6975	7803	8356	8684	8787	8871	8935	8986	9193	9027	9046	9222	9289	9086	9242	9295	9299	9118	9258	9143	9336
	50	1692	2553	3709	5043	6268	7272	7943	8163	8341	8475	8582	8986	8666	8705	9046	9178	8786	9086	9190	9198	8848	9118	8897	9271
	100	877	1362	2084	3080	4253	5520	6601	7008	7348	7612	7825	8582	7993	8072	8705	8961	8230	8786	8984	9001	8349	8848	8440	9143
	200	445	700	1095	1685	2485	3545	4722	5268	5768	6191	6553	7825	6847	6996	8072	8548	7277	8230	8594	8626	7487	8349	7648	8897
	500	179	284	449	706	1079	1641	2410	2853	3321	3781	4232	6030	4644	4878	6541	7469	5326	6869	7573	7645	5675	7115	5948	8228
	1000	90	142	226	357	552	857	1302	1581	1895	2231	2591	4232	2951	3177	4878	6107	3629	5326	6272	6388	4009	5675	4323	7303
	2000	45	71	113	180	279	437	675	830	1011	1213	1442	2591	1686	1850	3177	4411	2196	3629	4615	4761	2509	4000	2786	5948
	5000	18	28	45	72	112	176	275	341	419	509	615	1179	732	815	1528	2359	998	1831	2531	2659	1176	2112	1343	3801
600 Volts	0	7522	7522	7522	7522	7522	7522	7522	7522	7522	7522	7522	7522	7522	7522	7522	7522	7522	7522	7522	7522	7522	7522	7522	7522
	5	6621	6984	7195	7314	7381	7425	7452	7460	7468	7474	7479	7500	7483	7485	7503	7510	7489	7505	7511	7511	7492	7507	7495	7515
	10	5602	6339	6809	7079	7229	7323	7380	7398	7414	7426	7436	7479	7444	7447	7485	7498	7456	7489	7500	7501	7462	7492	7468	7508
	25	3481	4594	5588	6299	6729	7001	7160	7209	7250	7282	7308	7414	7328	7338	7429	7464	7358	7439	7467	7469	7375	7448	7388	7488
	50	2019	2936	4024	5075	5872	6436	6780	6889	6977	7044	7097	7308	7139	7159	7338	7406	7200	7358	7412	7417	7233	7375	7258	7454
	100	1075	1644	2445	3443	4456	5373	6034	6259	6441	6579	6690	7097	6776	6817	7159	7293	6899	7200	7305	7314	6963	7233	7011	7388
	200	552	862	1333	2005	2849	3842	4777	5155	5480	5738	5949	6690	6116	6197	6817	7074	6354	6899	7098	7115	6472	6963	6562	7258
	500	224	353	556	868	1310	1946	2749	3172	3591	3975	4325	5618	4626	4787	5918	6471	5089	6108	6528	6568	5318	6249	5494	6894
	1000	112	178	281	444	682	1046	1559	1866	2199	2538	2883	4325	3208	3401	4787	5631	3773	5089	5731	5801	4070	5318	4307	6358
	2000	56	89	141	224	347	540	827	1009	1219	1447	1697	2883	1953	2119	3401	4419	2457	3773	4566	4669	2749	4070	2997	5494
	5000	22	35	56	90	140	220	341	422	517	625	750	1404	887	982	1778	2624	1188	2088	2784	2899	1382	2362	1560	3885

AB 1-86 6470247 0000375 0

Copyright National Electrical Manufacturers Association
Provided by IHS under license with NEMA
No reproduction or networking permitted without license from IHS
Not for Resale

Table A-6

Symmetrical Three-phase Bolted Short-circuit Currents in Amperes at Various Distances From a Liquid-filled Transformer
Rated 500 kVA, Z = 4.50 Percent

Transformer Secondary Voltage	Distance, Feet	Wire Size of Copper Conductors																							
		14 AWG	12 AWG	10 AWG	8 AWG	6 AWG	4 AWG	2 AWG	1 AWG	1/0 AWG	2/0 AWG	3/0 AWG	Two 3/0 AWG	4/0 AWG	250 MCM	Two 250 MCM	Three 300 MCM	350 MCM	Two 350 MCM	Three 350 MCM	Three 400 MCM	500 MCM	Two 500 MCM	750 MCM	Four 750 MCM
208 Volts	0	33273	33273	33273	33273	33273	33273	33273	33273	33273	33273	33273	33273	33273	33273	33273	33273	33273	33273	33273	33273	33273	33273	33273	33273
	5	7226	10756	15274	20103	24153	27215	29148	29762	30258	30629	30926	32089	31160	31266	32252	32631	31493	32365	32664	32687	31670	32455	31806	32895
	10	3780	5839	8844	12831	17252	21654	25100	26326	27329	28093	28704	30926	29181	29404	31266	32006	29853	31493	32071	32117	30194	31670	30455	32524
	25	1546	2432	3807	5868	8669	12408	16580	18525	20308	21815	23105	27656	24152	24679	28528	30224	25674	29082	30385	30498	26417	29500	26983	31458
	50	778	1230	1942	3044	4633	6987	10108	11842	13624	15319	16929	23105	18350	19135	24679	27562	20614	25674	27867	28079	21747	26417	22622	29820
	100	390	618	980	1547	2385	3685	5561	6714	7997	9339	10745	16929	12115	12951	19135	23247	14598	20614	23762	24121	15944	21747	17035	26983
	200	195	309	492	779	1208	1887	2906	3563	4326	5169	6113	10745	7101	7754	12951	17457	9113	14598	18154	18648	10316	15944	11356	22622
	500	78	124	197	313	487	765	1191	1474	1810	2194	2643	5019	3138	3485	6446	9769	4247	7659	10428	10914	4976	8757	5655	15148
	1000	39	62	98	156	244	384	600	745	918	1118	1356	2643	1622	1813	3485	5577	2242	4247	6044	6398	2666	4976	3074	9726
	2000	19	31	49	78	122	192	301	374	462	564	686	1356	824	925	1813	2991	1152	2242	3272	3490	1382	2666	1607	5655
	5000	7	12	19	31	48	77	120	150	185	227	276	550	333	374	743	1249	468	927	1375	1474	565	1113	660	2503
240 Volts	0	31235	31235	31235	31235	31235	31235	31235	31235	31235	31235	31235	31235	31235	31235	31235	31235	31235	31235	31235	31235	31235	31235	31235	31235
	5	8157	11926	16459	20894	24287	26683	28134	28586	28953	29228	29448	30336	29622	29701	30457	30746	29872	30542	30771	30788	30005	30610	30109	30946
	10	4323	6628	9901	14031	18280	22161	24966	25917	26686	27266	27728	29448	28087	28253	29701	30268	28594	29872	30316	30351	28855	30005	29056	30662
	25	1779	2791	4353	6654	9692	13552	17560	19312	20862	22130	23187	26902	24031	24445	27562	28889	25235	27966	29010	29097	25825	28308	26273	29839
	50	897	1416	2232	3487	5275	7864	11162	12916	14660	16262	17732	23187	18993	19667	24445	26782	20930	25235	27017	27182	21885	25825	22615	28554
	100	450	712	1129	1779	2736	4205	6289	7539	8905	10299	11722	17732	13070	13868	19667	23223	15415	20930	23641	23932	16649	21885	17631	26273
	200	225	357	567	898	1391	2167	3322	4060	4908	5833	6852	11722	7900	8579	13868	18116	9968	15415	18731	19162	11168	16649	12185	22615
	500	90	143	227	361	561	881	1370	1692	2075	2510	3015	5659	3567	3951	7186	10656	4785	8453	11312	11789	5572	9575	6294	15867
	1000	45	71	113	180	281	442	691	857	1056	1285	1555	3015	1858	2074	3951	6241	2555	4785	6737	7111	3028	5572	3479	10546
	2000	22	35	57	90	141	222	347	431	532	650	790	1555	948	1062	2074	3396	1321	2555	3708	3947	1581	3028	1835	6294
	5000	9	14	22	36	56	88	139	173	214	261	318	634	383	431	854	1431	539	1064	1575	1687	649	1276	759	2843
480 Volts	0	15617	15617	15617	15617	15617	15617	15617	15617	15617	15617	15617	15617	15617	15617	15617	15617	15617	15617	15617	15617	15617	15617	15617	15617
	5	10584	12443	13702	14442	14849	15101	15250	15296	15336	15367	15392	15505	15413	15422	15519	15556	15443	15530	15559	15561	15460	15538	15473	15581
	10	7094	9428	11537	13052	13966	14536	14865	14966	15051	15115	15168	15392	15210	15228	15422	15495	15271	15443	15501	15505	15305	15460	15331	15545
	25	3344	4987	7100	9374	11291	12746	13664	13955	14189	14365	14505	15056	14615	14665	15133	15313	14772	15186	15328	15339	14855	15228	14919	15437
	50	1747	2700	4096	5957	8031	10108	11741	12323	12799	13162	13451	14505	13676	13781	14665	15016	13993	14772	15046	15068	14154	14855	14277	15261
	100	889	1395	2176	3327	4846	6776	8780	9656	10431	11065	11593	13451	12015	12222	13781	14444	12617	13993	14505	14548	12912	14154	13136	14919
	200	448	708	1116	1743	2637	3932	5581	6458	7330	8131	8866	11593	9496	9833	12222	13391	10465	12617	13508	13591	10942	12912	11307	14277
	500	180	285	452	714	1102	1703	2573	3108	3705	4330	4986	7883	5627	6018	8922	10863	6790	9620	11106	11276	7421	10153	7933	13629
	1000	90	143	227	359	558	871	1342	1647	2000	2391	2829	4986	3289	3593	6018	8133	4226	6790	8461	8693	4787	7421	5273	10565
	2000	45	71	113	180	280	440	685	846	1037	1255	1507	2829	1783	1975	3593	5328	2392	4226	5656	5894	2786	4787	3147	7933
	5000	18	28	45	72	112	177	277	343	424	516	626	1221	749	837	1611	2581	1036	1964	2798	2963	1232	2303	1421	4512
600 Volts	0	12494	12494	12494	12494	12494	12494	12494	12494	12494	12494	12494	12494	12494	12494	12494	12494	12494	12494	12494	12494	12494	12494	12494	12494
	5	9935	10958	11578	11925	12115	12235	12307	12330	12350	12366	12378	12436	12389	12393	12443	12462	12404	12449	12464	12465	12413	12453	12420	12475
	10	7501	9204	10467	11249	11687	11957	12115	12164	12205	12237	12263	12378	12284	12294	12393	12431	12315	12404	12434	12436	12333	12413	12346	12457
	25	3947	5628	7491	9139	10290	11058	11511	11651	11765	11851	11920	12206	11975	12000	12244	12337	12055	12271	12345	12350	12098	12293	12131	12401
	50	2132	3233	4735	6505	8167	9553	10484	10788	11032	11216	11362	11920	11476	11528	12000	12183	11638	12055	12198	12210	11722	12098	11787	12310
	100	1101	1713	2632	3915	5455	7152	8628	9190	9659	10023	10316	11362	10545	10653	11528	11882	10867	11638	11913	11935	11028	11722	11151	12131
	200	558	878	1376	2124	3147	4525	6083	6818	7495	8071	8565	10316	8968	9171	10653	11310	9554	10867	11372	11415	9839	11028	10056	11787
	500	224	355	563	885	1356	2069	3054	3627	4238	4842	5440	7854	5988	6303	8549	9819	6902	8994	9961	10059	7371	9328	7737	10857
	1000	112	178	283	448	692	1075	1639	1993	2395	2827	3292	5440	3760	4055	6303	7958	4649	6902	8181	8337	5149	7371	5563	9582
	2000	56	89	142	225	349	547	846	1042	1270	1527	1818	3292	2129	2340	4055	5680	2785	4649	5952	6146	3190	5149	3548	7737
	5000	22	35	56	90	140	221	345	427	525	638	771	1484	919	1024	1928	2995	1256	2317	3217	3383	1482	2677	1695	4874

AB 1-86
6470247 0000376 2

Copyright National Electrical Manufacturers Association
Provided by IHS under license with NEMA
No reproduction or networking permitted without license from IHS
Not for Resale

Table A-7
Symmetrical Three-phase Bolted Short-circuit Currents in Amperes at Various Distances From a Liquid-filled Transformer
Rated 750 kVA, Z = 5.32 Percent

Transformer Secondary Voltage	Distance, Feet	Wire Size of Copper Conductors																							
		14 AWG	12 AWG	10 AWG	8 AWG	6 AWG	4 AWG	2 AWG	1 AWG	1/0 AWG	2/0 AWG	3/0 AWG	Two 3/0 AWG	4/0 AWG	250 MCM	Two 250 MCM	Three 300 MCM	350 MCM	Two 350 MCM	Three 350 MCM	Three 400 MCM	500 MCM	Two 500 MCM	750 MCM	Four 750 MCM
208 Volts	0	42763	42763	42763	42763	42763	42763	42763	42763	42763	42763	42763	42763	42763	42763	42763	42763	42763	42763	42763	42763	42763	42763	42763	42763
	5	7457	11346	16672	22935	28735	33434	36471	37425	38183	38742	39179	40964	39517	41187	41766	39986	41344	41810	41843	40236	41469	40428	42157
	10	3834	5982	9220	13758	19209	25172	30243	32119	33661	34834	35762	39179	36475	36798	39664	40794	37452	39986	40885	40950	37943	40236	38313	41566
	25	1555	2453	3864	6019	9048	13311	18451	21013	23450	25577	27436	34162	28963	29733	35463	38039	31178	36274	38270	38433	32244	36877	33042	39880
	50	780	1235	1956	3081	4727	7229	10695	12712	14855	16970	19047	27436	20935	22000	29733	33990	24021	31178	34433	34742	25576	32244	26770	37330
	100	391	619	983	1556	2408	3745	5717	6958	8368	9880	11507	19047	13137	14159	22000	27679	16204	24021	28412	28921	17907	25576	19297	33042
	200	195	310	493	781	1214	1902	2945	3626	4425	5320	6337	11507	7423	8154	14159	19812	9700	16204	20734	21390	11096	17907	12319	26770
	500	78	124	197	313	488	767	1197	1484	1826	2219	2682	5167	3196	3561	6716	10438	4367	8065	11208	11781	5148	9310	5883	16913
	1000	39	62	98	156	244	384	601	747	922	1125	1365	2682	1637	1833	3561	5782	2274	4367	6292	6681	2714	5148	3140	10424
	2000	19	31	49	78	122	192	301	375	463	566	689	1365	828	930	1833	3047	1161	2274	3342	3571	1394	2714	1625	5883
	5000	7	12	19	31	48	77	120	150	185	227	277	552	333	375	746	1258	470	932	1387	1488	567	1122	663	2547
240 Volts	0	40669	40669	40669	40669	40669	40669	40669	40669	40669	40669	40669	40669	40669	40669	40669	40669	40669	40669	40669	40669	40669	40669	40669	40669
	5	8488	12757	18342	24437	29592	33446	35805	36527	37103	37526	37859	39262	38117	38228	39432	39887	38478	39554	39921	39947	38674	39652	38824	40194
	10	4401	6834	10436	15307	20823	26394	30743	32263	33491	34410	65132	37859	35685	35932	38228	39120	36443	38478	39191	39242	36831	38674	37124	39728
	25	1791	2822	4434	6870	10227	14787	19970	22406	24643	26526	28124	33830	29406	30036	34845	36924	31226	35484	37104	37232	32103	35963	32757	38386
	50	900	1423	2252	3538	5408	8206	11973	14092	16284	18379	20372	28124	22130	23090	30036	33613	24895	31226	33968	34215	26259	32103	27296	36324
	100	451	714	1133	1791	2768	4290	6508	7882	9420	11039	12745	20372	14412	15430	23090	28212	17433	24895	28831	29261	19061	26259	20365	32757
	200	225	357	568	901	1398	2187	3377	4149	5047	6045	7165	12745	8344	9125	15430	20981	10753	17433	21830	22429	12192	19061	13430	27296
	500	90	143	227	361	562	884	1378	1707	2098	2546	3070	5867	3650	4058	7560	11548	4953	9005	12341	12925	5811	10314	6608	18048
	1000	45	71	114	180	281	443	693	861	1062	1294	1570	3070	1879	2102	4058	6526	2601	4953	7080	7499	3096	5811	3572	11465
	2000	22	35	57	90	141	222	348	432	534	652	793	1570	953	1070	2102	3477	1333	2601	3807	4062	1600	3096	1861	6608
	5000	9	14	22	36	56	88	139	173	214	262	319	636	384	432	859	1445	541	1072	1592	1707	652	1288	763	2905
480 Volts	0	20334	20334	20334	20334	20334	20334	20334	20334	20334	20334	20334	20334	20334	20334	20334	20334	20334	20334	20334	20334	20334	20334	20334	20334
	5	12388	15230	17289	18515	19172	19562	19782	19848	19905	19948	19983	20159	20012	20023	20178	20236	20053	20193	20240	20243	20078	20205	20097	20275
	10	7731	10761	13823	16229	17734	18663	19181	19334	19461	19555	19631	19983	19691	19716	20023	20138	19777	20053	20146	20153	19826	20078	19864	20215
	25	3448	5256	7748	10708	13487	15766	17252	17721	18093	18367	18582	19455	18748	18819	19564	19847	18977	19640	19868	19884	19099	19702	19193	20038
	50	1771	2765	4267	6383	8946	11782	14225	15137	15888	16461	16915	18582	17264	17422	18819	19372	17742	18977	19416	19448	17981	19099	18162	19749
	100	895	1411	2217	3435	5113	7393	9985	11203	12321	13263	14062	16915	14703	15018	17422	18462	15613	17742	18552	18616	16051	17981	16378	19193
	200	450	711	1126	1769	2704	4103	5986	7046	8142	9189	10186	14062	11065	11545	15018	16806	12447	15613	16984	17107	13129	16051	13648	18162
	500	180	285	454	718	1112	1730	2643	3220	3876	4581	5342	8889	6108	6589	10296	13014	7555	11264	13368	13614	8362	12011	9024	15604
	1000	90	143	227	360	560	878	1360	1675	2045	2461	2933	5342	3438	3780	6589	9260	4502	7555	9699	10012	5157	8362	5732	12585
	2000	45	71	113	180	281	442	689	853	1049	1273	1535	2933	1825	2029	3780	5774	2476	4502	6170	6462	2905	5157	3304	9024
	5000	18	28	45	72	112	177	277	345	425	519	630	1239	756	847	1646	2677	1051	2020	2914	3096	1254	2383	1452	4844
600 Volts	0	16267	16267	16267	16267	16267	16267	16267	16267	16267	16267	16267	16267	16267	16267	16267	16267	16267	16267	16267	16267	16267	16267	16267	16267
	5	12149	13822	14853	15414	15708	15887	15990	16021	16049	16070	16088	16178	16102	16108	16188	16217	16123	16195	16219	16221	16135	16201	16145	16237
	10	8548	11013	13017	14311	15029	15456	15694	15765	15825	15870	15907	16088	15937	15949	16108	16167	15980	16123	16171	16174	16005	16135	16025	16206
	25	4155	6129	8544	10932	12749	14003	14737	14957	15133	15264	15367	15817	15448	15482	15871	16017	15561	15909	16028	16036	15624	15941	15672	16115
	50	2182	3364	5065	7245	9520	11602	13085	13575	13966	14255	14482	15367	14656	14732	15482	15770	14895	15561	15792	15808	15020	15624	15115	15965
	100	1112	1744	2715	4127	5942	8134	10236	11087	11811	12379	12837	14482	13192	13357	14732	15289	13681	14895	15335	15367	13922	15020	14102	15672
	200	561	885	1395	2176	3279	4845	6761	7730	8662	9482	10206	12837	10804	11108	13357	14381	11677	13681	14473	14538	12098	13922	12412	15115
	500	225	356	565	893	1376	2123	3190	3835	4543	5270	6013	9193	6718	7134	10202	12077	7937	10853	12288	12434	8573	11338	9072	13641
	1000	112	178	284	449	697	1088	1673	2049	2481	2955	3479	6013	4019	4369	7134	9371	5086	7937	9688	9910	5703	8573	6223	11703
	2000	56	89	142	225	350	550	855	1056	1293	1561	1870	3479	2206	2436	4369	6348	2932	5086	6699	6952	3391	5703	3804	9072
	5000	22	35	57	90	140	221	346	429	529	644	780	1518	933	1042	1993	3162	1284	2417	3416	3607	1523	2817	1751	5372

AB 1-86 6470247 0003274

Copyright National Electrical Manufacturers Association
Provided by IHS under license with NEMA
No reproduction or networking permitted without license from IHS
Not for Resale

Table A-8

Symmetrical Three-phase Bolted Short-circuit Currents in Amperes at Various Distances From a Liquid-filled Transformer
Rated 1000 kVA, Z = 5.32 Percent

Transformer Secondary Voltage	Distance, Feet	Wire Size of Copper Conductors																						
		14 AWG	12 AWG	10 AWG	8 AWG	6 AWG	4 AWG	2 AWG	1 AWG	1/0 AWG	2/0 AWG	3/0 AWG	Two 3/0 AWG	4/0 AWG	250 MCM	Two 250 MCM	Three 300 MCM	350 MCM	Two 350 MCM	Three 350 MCM	Three 400 MCM	500 MCM	Two 500 MCM	750 MCM	Four 750 MCM
208 Volts	0	56787	56787	56787	56787	56787	56787	56787	56787	56787	56787	56787	56787	56787	56787	56787	56787	56787	56787	56787	56787	56787	56787	56787
	5	7574	11683	17607	25222	33185	40485	45680	47393	48758	49767	50555	53648	51159	51422	54043	55048	51987	54317	55125	55181	52419	54534	52747	55726
	10	3859	6053	9425	14341	20669	28330	35892	38675	41211	43199	44798	50555	46037	46611	51422	53367	47737	51987	53525	53638	48573	52419	49198	54700
	25	1558	2462	3891	6097	9266	13910	19914	23137	26359	29322	32034	42202	34346	35562	44430	48695	37835	45808	49094	49374	39527	46825	40797	51817
	50	781	1237	1962	3098	4775	7368	11078	13326	15793	18325	20919	32034	23379	24830	35562	42123	27635	37835	42859	43369	29854	39527	31593	47583
	100	391	620	985	1560	2419	3776	5808	7111	8615	10263	12086	20919	13967	15186	24830	32650	17683	27635	33758	34532	19835	29854	21642	40797
	200	195	310	493	782	1216	1909	2966	3663	4485	5418	6492	12086	7658	8460	15186	22087	10183	17683	23311	24193	11780	19835	13216	31593
	500	78	124	197	313	488	768	1201	1489	1835	2235	2707	5267	3236	3614	6918	10984	4457	8391	11868	12532	5286	9782	6076	18676
	1000	39	62	98	156	244	385	602	748	924	1128	1372	2707	1647	1847	3614	5937	2298	4457	6485	6907	2751	5286	3194	11055
	2000	19	31	49	78	122	192	301	375	464	567	690	1372	831	933	1847	3089	1167	2298	3395	3633	1404	2751	1639	6076
	5000	7	12	19	31	48	77	120	150	186	227	277	553	334	375	748	1265	471	936	1396	1499	568	1128	666	2582
240 Volts	0	54026	54026	54026	54026	54026	54026	54026	54026	54026	54026	54026	54026	54026	54026	54026	54026	54026	54026	54026	54026	54026	54026	54026	54026
	5	8661	13248	19654	27426	34917	41210	45379	46701	47750	48521	49123	51566	49586	49786	51868	52659	50224	52080	52719	52763	50563	52250	50822	53192
	10	4437	6937	10735	16138	22793	30327	36961	39507	41599	43201	44471	49123	45447	45891	49786	51329	46780	50224	51451	51540	47445	50563	47944	52381
	25	1796	2835	4472	6982	10541	15625	21908	25119	28222	30973	33410	42313	35431	36461	44087	47575	38388	45188	47889	48110	39811	46005	40874	50074
	50	901	1426	2260	3563	5477	8405	12510	14934	17539	20143	22736	33410	25123	26489	36461	42117	29092	38388	42716	43132	31107	39811	32662	46614
	100	451	715	1135	1797	2784	4336	6838	8097	9764	11565	13523	22736	15503	16757	26489	33792	19286	29092	34759	35431	21413	31107	23164	40874
	200	225	358	569	902	1402	2198	3408	4200	5133	6181	7379	13523	8665	9537	16757	23753	11391	19286	24924	25760	13079	21413	14570	32662
	500	90	143	227	361	563	886	1383	1715	2111	2568	3106	6006	3705	4132	7835	12269	5077	9441	13202	13898	5997	10935	6867	20196
	1000	45	71	114	181	282	444	694	863	1065	1299	1578	3106	1893	2121	4132	6737	2634	5077	7341	7803	3147	5997	3646	12280
	2000	22	35	57	90	141	222	348	432	534	653	795	1578	957	1075	2121	3534	1342	2634	3879	4147	1613	3147	1880	6867
	5000	9	14	22	36	56	89	139	173	214	262	319	637	385	433	862	1455	543	1077	1604	1722	655	1297	766	2953
480 Volts	0	27013	27013	27013	27013	27013	27013	27013	27013	27013	27013	27013	27013	27013	27013	27013	27013	27013	27013	27013	27013	27013	27013	27013	27013
	5	13890	18024	21437	23662	24899	25632	26038	26158	26260	26336	26399	26706	26449	26469	26740	26840	26521	26765	26848	26853	26563	26786	26596	26908
	10	8134	11771	15927	19678	22293	23995	24960	25245	25476	25647	25783	26399	25889	25934	26469	26669	26040	26521	26684	26694	26125	26563	26190	26803
	25	3500	5405	8164	11739	15522	19037	21568	22409	23079	23575	23962	25475	24259	24388	25870	26161	24665	25804	26199	26226	24876	25910	25037	26493
	50	1782	2796	4358	6642	9601	13217	16736	18177	19407	20375	21156	23962	21762	22043	24388	25339	22594	24665	25416	25471	23002	24876	23307	25991
	100	898	1417	2236	3491	5270	7812	10954	12556	14111	15486	16705	21156	17715	18230	22043	23787	19194	22594	23944	24055	19905	23002	20437	25037
	200	450	713	1130	1781	2738	4202	6255	7467	8769	10071	11368	16705	12561	13244	18230	21058	14548	19194	21358	21566	15553	19905	16331	23307
	500	180	286	454	720	1117	1744	2684	3288	3986	4753	5603	9738	6482	7054	11592	15315	8228	12998	15848	16221	9243	13989	10099	19238
	1000	90	143	227	361	561	881	1370	1692	2072	2504	3003	5603	3544	3917	7054	10299	4720	8228	10879	11298	5467	9243	6140	14822
	2000	45	71	113	180	281	443	691	857	1055	1284	1553	3003	1852	2066	3917	6134	2538	4720	6601	6949	2998	5467	3433	10099
	5000	18	28	45	72	112	177	278	345	426	521	633	1250	760	853	1670	2747	1061	2061	3001	3197	1271	2445	1476	5130
600 Volts	0	21610	21610	21610	21610	21610	21610	21610	21610	21610	21610	21610	21610	21610	21610	21610	21610	21610	21610	21610	21610	21610	21610	21610	21610
	5	14355	17121	18986	20047	20604	20935	21123	21179	21228	21265	21296	21453	21321	21331	21470	21522	21357	21483	21526	21528	21379	21494	21396	21556
	10	9333	12661	15769	18021	19352	20153	20595	20725	20834	20915	20981	21296	21033	21054	21331	21434	21108	21357	21441	21447	21151	21379	21185	21502
	25	4269	6448	9344	12585	15401	17551	18881	19289	19613	19851	20037	20823	20182	20243	20917	21171	20382	20985	21191	21205	20491	21039	20574	21343
	50	2206	3432	5261	7766	10661	13658	16056	16905	17592	18108	18513	20037	18823	18961	20243	20742	19248	20382	20781	20809	19461	20491	19623	21081
	100	1117	1759	2756	4249	6264	8903	11737	12999	14123	15041	15802	18513	16402	16689	18961	19913	17239	19246	19993	20050	17643	19461	17945	20574
	200	562	888	1404	2202	3352	5048	7266	8471	9687	10815	11858	15802	12754	13230	16689	18379	14119	17239	18539	18650	14783	17643	15282	19623
	500	225	357	567	896	1386	2152	3272	3970	4755	5587	6470	10465	7339	7874	11929	14704	8931	12907	15044	15280	9796	13650	10492	17201
	1000	112	178	284	450	699	1095	1693	2081	2535	3040	3610	6470	4213	4614	7874	10806	5454	8931	11263	11585	6201	9796	6847	14214
	2000	56	89	142	225	351	552	860	1063	1306	1582	1905	3610	2258	2506	4614	6933	3045	5454	7377	7700	3555	6201	4024	10492
	5000	22	35	57	90	140	221	347	430	531	648	786	1540	941	1053	2038	3289	1305	2492	3572	3787	1554	2928	1795	5828

AB 1-86
6470247 0000378 6

Copyright National Electrical Manufacturers Association
Provided by IHS under license with NEMA
No reproduction or networking permitted without license from IHS
Not for Resale

Table A-9
Symmetrical Three-phase Bolted Short-circuit Currents in Amperes at Various Distances From a Liquid-filled Transformer
Rated 1500 kVA, Z = 5.32 Percent

Transformer Secondary Voltage	Distance, Feet	Wire Size of Copper Conductors																							
		14 AWG	12 AWG	10 AWG	8 AWG	6 AWG	4 AWG	2 AWG	1 AWG	1/0 AWG	2/0 AWG	3/0 AWG	Two 3/0 AWG	4/0 AWG	250 MCM	Two 250 MCM	Three 300 MCM	350 MCM	Two 350 MCM	Three 350 MCM	Three 400 MCM	500 MCM	Two 500 MCM	750 MCM	Four 750 MCM
208 Volts	0	84472	84472	84472	84472	84472	84472	84472	84472	84472	84472	84472	84472	84472	84472	84472	84472	84472	84472	84472	84472	84472	84472	84472	84472
	5	7680	11990	18493	27611	38542	50427	60415	64063	67042	69290	71056	77645	72404	73006	78536	80697	74234	79133	80863	80984	75155	79597	75846	82157
	10	3882	6118	9612	14888	22136	31909	42859	47925	52524	56353	59567	71056	62121	63356	73006	77107	65698	74234	77451	77694	67417	75155	68691	79952
	25	1561	2471	3916	6168	9469	14488	21442	25483	29770	33990	38117	54766	41853	43947	59221	67522	47908	62002	68365	68951	50936	64046	53246	73933
	50	782	1239	1968	3114	4820	7499	11452	13941	16765	19792	23046	38117	26298	28329	43947	55151	32383	47908	56571	57555	35744	50936	38472	65563
	100	391	620	986	1563	2429	3806	5896	7260	8859	10652	12689	23046	14859	16320	28329	39579	19402	32383	41394	42680	22177	35744	24600	53246
	200	195	310	493	783	1219	1916	2987	3698	4545	5515	6648	12689	7899	8777	16320	24842	10702	19402	26515	27743	12541	22177	14242	38472
	500	78	124	197	313	488	769	1204	1495	1845	2250	2732	5367	3276	3668	7125	11570	4550	8736	12588	13364	5429	10296	6280	20823
	1000	39	62	98	156	244	385	603	750	926	1132	1378	2732	1657	1861	3668	6097	2322	4550	6687	7144	2789	5429	3249	11760
	2000	19	31	49	78	122	192	302	375	464	568	692	1378	833	937	1861	3130	1173	2322	3448	3696	1414	2789	1653	6280
	5000	7	12	19	31	48	77	120	150	186	227	277	554	334	376	750	1272	472	940	1405	1509	570	1134	668	2617
240 Volts	0	80426	80426	80426	80426	80426	80426	80426	80426	80426	80426	80426	80426	80426	80426	80426	80426	80426	80426	80426	80426	80426	80426	80426	80426
	5	8816	13699	20933	30715	41754	52821	61356	64300	66664	68421	69793	75054	70839	71298	75735	77446	72259	76199	77576	77671	72988	76564	73537	78599
	10	4470	7031	11008	16930	24849	35040	45679	50290	54334	57590	60257	69793	62342	63324	71297	74586	65215	72259	74854	75045	66608	72988	67642	76844
	25	1800	2848	4507	7086	10834	16449	24003	28244	32622	36796	40748	56099	44217	46099	59798	66769	49628	62085	67443	67912	52283	63764	54284	71978
	50	902	1429	2268	3586	5542	8593	13039	15793	18874	22113	25520	40748	28843	30862	46099	56189	34827	49628	57387	58215	38035	52283	40589	65009
	100	451	715	1137	1802	2798	4378	6762	8307	10107	12104	14347	25520	16703	18262	30862	41896	21505	34827	43564	44737	24365	38035	26814	54284
	200	225	358	569	903	1405	2208	3437	4251	5216	6317	7596	14347	8997	9972	18262	27234	12089	21505	28914	30135	14084	24365	15905	40589
	500	90	143	228	362	563	887	1388	1722	2124	2589	3141	6145	3761	4206	8120	13058	5204	9909	14163	15000	6193	11621	7143	22899
	1000	45	71	114	181	282	444	696	865	1068	1305	1587	3141	1907	2140	4206	6957	2668	5204	7616	8125	3200	6193	3722	13209
	2000	22	35	57	90	141	222	348	433	535	655	798	1587	960	1079	2140	3591	1350	2668	3952	4234	1626	3200	1900	7143
	5000	9	14	22	36	56	89	139	173	214	262	320	639	385	434	865	1464	544	1083	1616	1736	657	1305	770	3002
480 Volts	0	40213	40213	40213	40213	40213	40213	40213	40213	40213	40213	40213	40213	40213	40213	40213	40213	40213	40213	40213	40213	40213	40213	40213	40213
	5	15517	21588	27679	32400	35305	37072	38042	38325	38559	38732	38871	39544	38982	39026	39616	39835	39138	39671	39850	39862	39229	39716	39299	39981
	10	8510	12799	18403	24488	29580	33335	35597	36278	36820	37217	37527	38871	37767	37867	39026	39460	38099	39138	39492	39516	38282	39229	38422	39751
	25	3547	5541	8557	12806	17945	23602	28424	30204	31661	32765	33633	36859	34297	34594	37299	38359	35197	37593	38442	38501	35650	37822	35989	39077
	50	1792	2825	4440	6884	10254	14828	20007	22427	24638	26489	28049	33633	29294	29899	34594	36601	31042	35197	36770	36890	31882	35650	32504	37996
	100	900	1424	2253	3543	5417	8224	12001	14122	16311	18398	20374	28049	22108	23049	29899	33384	24814	31042	33721	33956	26141	31882	27142	35989
	200	451	714	1134	1793	2771	4296	6519	7896	9437	11056	12760	20374	14421	15431	23049	28094	17413	24814	28693	29107	19017	26141	20294	32504
	500	180	286	455	721	1121	1757	2723	3354	4095	4927	5873	10699	6883	7565	13184	18502	9006	15101	19368	19984	10309	16697	11449	25047
	1000	90	143	227	361	562	884	1379	1708	2099	2548	3072	5873	3652	4060	7565	11550	4954	9006	12338	12918	5810	10309	6604	17997
	2000	45	71	114	181	281	443	694	861	1062	1294	1570	3072	1880	2103	4060	6529	2602	4954	7081	7500	3096	5810	3571	11449
	5000	18	28	45	72	112	177	278	346	427	522	636	1261	765	859	1694	2818	1072	2102	3092	3304	1288	2510	1501	5448
600 Volts	0	32170	32170	32170	32170	32170	32170	32170	32170	32170	32170	32170	32170	32170	32170	32170	32170	32170	32170	32170	32170	32170	32170	32170	32170
	5	17150	22054	25991	28491	29855	30655	31095	31224	31334	31417	31484	31828	31539	31560	31864	31976	31617	31892	31984	31990	31663	31915	31699	32051
	10	10128	14584	19578	23964	26939	28839	29899	30210	30462	30648	30795	31484	30911	30959	31560	31784	31075	31617	31800	31812	31168	31663	31240	31933
	25	4373	6746	10162	14537	19077	23192	26080	27022	27770	28320	28747	30451	29074	29215	30662	31213	29520	30808	31254	31284	29754	30925	29931	31583
	50	2227	3494	5442	8278	11921	16306	20479	22152	23568	24670	25553	28747	26233	26545	29215	30286	27161	29520	30371	30432	27617	29754	27957	31015
	100	1122	1772	2794	4360	6574	9717	13553	15486	17336	18959	20381	25553	21549	22138	26545	28528	23239	27161	28702	28824	24049	27617	24651	29931
	200	563	891	1412	2226	3421	5244	7788	9279	10872	12454	14014	20381	15439	16246	22138	25405	17776	23239	25742	25976	18952	24049	19853	27957
	500	225	357	568	900	1396	2179	3351	4103	4970	5919	6967	12039	8046	8744	14262	18698	10170	15848	19318	19751	11394	17097	12418	23258
	1000	112	179	284	451	702	1101	1712	2113	2588	3125	3745	6967	4415	4876	8744	12692	5866	10170	13386	13886	6781	11394	7601	18070
	2000	56	89	142	226	352	553	864	1071	1319	1604	1939	3745	2312	2577	4876	7610	3163	5866	8180	8603	3733	6781	4269	12418
	5000	22	35	57	90	141	222	347	432	533	651	791	1562	950	1065	2084	3423	1325	2570	3738	3981	1586	3047	1841	6362

AB 1-86
4702470000379 8

Copyright National Electrical Manufacturers Association
Provided by IHS under license with NEMA
No reproduction or networking permitted without license from IHS
Not for Resale

Table A-10

Symmetrical Three-phase Bolted Short-circuit Currents in Amperes at Various Distances From a Liquid-filled Transformer

Rated 2000 kVA, Z = 5.32 Percent

Transformer Secondary Voltage	Distance, Feet	Wire Size of Copper Conductors																							
		14 AWG	12 AWG	10 AWG	8 AWG	6 AWG	4 AWG	2 AWG	1 AWG	1/0 AWG	2/0 AWG	3/0 AWG	Two 3/0 AWG	4/0 AWG	250 MCM	Two 250 MCM	Three 300 MCM	350 MCM	Two 350 MCM	Three 350 MCM	Three 400 MCM	500 MCM	Two 500 MCM	750 MCM	Four 750 MCM
208 Volts	0	111710	111710	111710	111710	111710	111710	111710	111710	111710	111710	111710	111710	111710	111710	111710	111710	111710	111710	111710	111710	111710	111710	111710	111710
	5	7729	12130	18903	28785	41492	56805	71359	77175	82082	85890	88927	99969	91260	92321	101546	105226	94419	102576	105512	105717	95972	103366	97124	107714
	10	3893	6147	9698	15141	22844	33797	47182	53926	60373	66018	70955	88927	74999	77026	92321	99159	80818	94419	99749	100163	83599	95972	85656	103964
	25	1563	2475	3927	6202	9565	14765	22210	26715	31654	36713	41876	63965	46751	49608	70814	83587	55110	75185	84981	85944	59432	78417	62790	94002
	50	782	1240	1970	3121	4842	7561	11633	14245	17259	20560	24206	41876	27959	30384	49608	65045	35339	55110	67189	68684	39588	59432	43134	80820
	100	391	620	987	1565	2434	3821	5938	7332	8980	10847	12998	24206	15329	16930	30384	44127	20367	35339	46539	48271	23544	39588	26388	62790
	200	195	310	493	784	1220	1920	2998	3716	4575	5563	6727	12998	8022	8941	16930	26436	10977	20367	28414	29885	12953	23544	14813	43134
	500	78	124	197	313	489	770	1205	1498	1849	2258	2745	5418	3296	3695	7232	11879	4597	8916	12974	13815	5503	10570	6387	22081
	1000	39	62	98	156	244	385	603	750	928	1134	1381	2745	1662	1867	3695	6179	2334	4597	6791	7267	2808	5503	3277	12144
	2000	19	31	49	78	122	192	302	375	464	568	693	1381	835	939	1867	3151	1176	2334	3474	3728	1419	2808	1660	6387
	5000	7	12	19	31	48	77	120	150	186	227	277	554	334	376	752	1275	472	942	1409	1514	571	1137	669	2636
240 Volts	0	106436	106436	106436	106436	106436	106436	106436	106436	106436	106436	106436	106436	106436	106436	106436	106436	106436	106436	106436	106436	106436	106436	106436	106436
	5	8887	13904	21532	32389	45735	60749	73845	78747	82777	85835	88240	97163	90075	90893	98370	101300	92551	99174	101524	101685	93790	99798	94713	103273
	10	4485	7074	11133	17299	25864	37638	51226	57685	63640	68667	72931	88240	76343	78004	90893	96433	81138	92551	96895	97222	83433	93790	85128	100272
	25	1802	2854	4524	7134	10972	16845	25081	29936	35145	40340	45490	66655	50210	52891	72557	83553	57983	76254	84686	85470	61901	78969	64897	92138
	50	902	1430	2272	3597	5573	8682	13297	16222	19561	23167	27079	45490	31027	33520	52891	67278	38530	57983	69145	70441	42724	61901	46153	80979
	100	451	716	1138	1805	2806	4399	6822	8410	10277	12377	14774	27079	17344	19086	33520	47434	22780	38530	49735	51373	26135	42724	29085	64897
	200	225	358	569	904	1407	2213	3452	4275	5258	6385	7705	14774	9167	10197	19086	29310	12463	22780	31355	32862	14539	26135	16662	46153
	500	90	143	228	362	564	888	1390	1726	2131	2600	3158	6215	3788	4244	8267	13479	5270	10156	14684	15606	6295	11993	7290	24523
	1000	45	71	114	181	282	444	696	866	1070	1307	1592	3158	1914	2150	4244	7070	2684	5270	7759	8294	3226	6295	3761	13724
	2000	22	35	57	90	141	222	348	433	536	655	799	1592	962	1082	2150	3621	1355	2684	3969	4278	1633	3226	1910	7290
	5000	9	14	22	36	56	89	139	173	214	262	320	639	386	434	866	1469	545	1086	1623	1744	658	1310	771	3028
480 Volts	0	53218	53218	53218	53218	53218	53218	53218	53218	53218	53218	53218	53218	53218	53218	53218	53218	53218	53218	53218	53218	53218	53218	53218	53218
	5	16329	23631	31927	39318	44376	47607	49403	49923	50346	50656	50901	52063	51093	51170	52187	52564	51363	52280	52591	52610	51517	52357	51636	52815
	10	8682	13292	19728	27509	34937	41086	45082	46327	47310	48026	48581	50901	49007	49185	51170	51918	49587	51363	51972	52012	49899	51517	50136	52417
	25	3568	5603	8738	13327	19266	26497	33468	36286	38676	40541	42032	47437	43180	43705	48220	50028	44738	48729	50170	50271	45502	49119	46059	51254
	50	1797	2838	4478	6996	10568	15671	21960	25158	28233	30943	33327	42032	35289	36278	43705	47053	38127	44738	47344	47548	39484	45502	40489	49414
	100	901	1427	2262	3567	5486	8422	12540	14968	17572	20170	22745	33327	25105	26445	36278	41776	28991	38127	42343	42735	30950	39484	32448	46069
	200	451	715	1136	1798	2786	4341	6648	8111	9780	11583	13539	22745	15513	16760	26445	33639	19265	28991	34572	35220	21362	30950	23076	40489
	500	180	286	455	722	1123	1764	2742	3387	4149	5014	6011	11219	7094	7839	14113	20580	9442	16446	21725	22550	10928	18454	12261	29479
	1000	90	143	227	361	563	886	1384	1715	2112	2569	3107	6011	3707	4133	7839	12271	5078	9442	13199	13890	5996	10928	6862	20136
	2000	45	71	114	181	282	444	695	863	1065	1300	1579	3107	1894	2122	4133	6739	2635	5078	7342	7803	3147	5996	3645	12261
	5000	18	28	45	72	112	177	278	346	428	523	637	1267	767	862	1706	2855	1078	2123	3138	3359	1297	2543	1514	5622
600 Volts	0	42574	42574	42574	42574	42574	42574	42574	42574	42574	42574	42574	42574	42574	42574	42574	42574	42574	42574	42574	42574	42547	42574	42574	42574
	5	18739	25386	31517	35877	38399	39889	40698	40932	41128	41273	41391	41984	41484	41521	42045	42239	41617	42092	42252	42262	41696	42131	41757	42367
	10	10506	15603	21945	28331	33240	36622	38571	39144	39603	39937	40199	41391	40403	40486	41521	41906	40686	41617	41933	41953	40845	41696	40966	42162
	25	4420	6882	10556	15589	21381	27327	32010	33642	34955	35931	36691	39605	37269	37521	39976	40923	38049	40230	40993	41045	38448	40429	38747	41557
	50	2237	3523	5524	8521	12568	17859	23501	25990	28191	29975	31442	36691	32589	33131	37521	39338	34170	38049	39485	39589	34932	38448	35496	40581
	100	1124	1778	2812	4412	6720	10125	14569	16977	19397	21634	23688	31442	25441	26362	33131	36388	28081	34170	36686	36895	29356	34932	30307	38747
	200	563	892	1416	2238	3453	5337	8049	9700	11520	13398	15329	23688	17168	18258	26362	31358	20361	28081	31914	32298	22026	29356	23328	35496
	500	225	358	569	901	1400	2192	3390	4168	5077	6089	7229	12955	8433	9233	15745	21562	10905	17833	22455	23083	12387	19532	13661	28215
	1000	112	179	284	451	703	1105	1721	2129	2614	3168	3813	7229	4520	5015	9233	13862	6090	10905	14740	15380	7108	12387	8040	20888
	2000	56	89	142	226	352	554	866	1075	1325	1614	1956	3813	2339	2613	5015	7988	3225	6090	8637	9126	3827	7108	4402	13661
	5000	22	35	57	90	141	222	348	432	534	652	794	1573	954	1071	2108	3493	1336	2610	3826	4083	1603	3109	1865	6665

AB 1-86 6470247 0000380 4

Copyright National Electrical Manufacturers Association
Provided by IHS under license with NEMA
No reproduction or networking permitted without license from IHS

6470247 0000381 6

Table A-11
Transformer Impedances

(Based on the NEMA Standards Publication for Secondary Unit Substations, Publication No. 210-1970.)

Single-phase kVA	Percent Impedance R	X	Z	Short-circuit Table
25	1.3	1.4	1.9	A-13
37.5	1.0	1.4	1.7	A-14
50	1.0	1.4	1.7	A-15
75	1.0	1.5	1.8	A-16
100	0.9	1.6	1.8	A-17
167	0.9	1.7	1.9	A-18
250	0.8	2.9	3.0	A-19

Table A-12
Aluminum Conductor Impedances

The following impedances are for triplexed conductors as shown in Fig. A-3 which are identical to each other except that the neutral (ground) conductor is uninsulated. Conductor sizes, insulation thicknesses and three-conductor ampacities are taken from the "National Electrical Code" as specified for Types T and TW for aluminum wire sizes up through 4/0 AWG and Types RHW and THW for larger conductors. R and X values are given per conductor at 50°C total temperature, no metallic enclosure, in ohms per 1000 feet at 60 hertz.

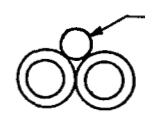

Fig. A-3

Probable Design Ampacity	Conductor Data Size, AWG or MCM	Ampacity	Line to Line R	Line to Line X	Line to Neutral R	Line to Neutral X
30	6	40	0.741	0.0349	0.741	0.0298
50	4	55	0.466	0.0329	0.466	0.0286
100	2	100	0.292	0.0312	0.292	0.0276
110	1	110	0.232	0.0314	0.232	0.0273
125	1/0	125	0.185	0.0305	0.185	0.0267
150	2/0	150	0.146	0.0297	0.146	0.0263
200	4/0	200	0.0920	0.0284	0.0920	0.0256
225	300	230	0.0650	0.0280	0.0650	0.0252
250	350	250	0.0557	0.0277	0.0557	0.0250
400	Two 4/0	400	0.0460	0.0142	0.0460	0.0128
500	Two 350	500	0.02785	0.01385	0.02785	0.0125

Not for Resale

Copyright National Electrical Manufacturers Association
Provided by IHS under license with NEMA
No reproduction or networking permitted without license from IHS
Not for Resale

Table A-13

Symmetrical Single-phase Short-circuit Currents in Amperes at Various Distances From a Distribution Transformer
Rated 120/240 Volts, 3-wire, 25 kVA, Z = 1.91 Percent

Transformer Secondary Voltage	Distance, Feet	Wire Size of Aluminum Conductors										
		6 AWG	4 AWG	2 AWG	1 AWG	1/0 AWG	2/0 AWG	4/0 AWG	300 MCM	350 MCM	Two 4/0 MCM	Two 350 MCM
240 Volts Line to Line	0	5438	5438	5438	5438	5438	5438	5438	5438	5438	5438	5438
	5	4830	5037	5174	5222	5260	5292	5337	5360	5367	5387	5403
	10	4310	4674	4927	5017	5090	5152	5239	5283	5298	5337	5367
	25	3191	3796	4283	4471	4628	4765	4963	5065	5101	5191	5264
	50	2180	2841	3478	3753	3997	4218	4555	4735	4800	4963	5101
	75	1643	2251	2907	3215	3501	3772	4204	4444	4532	4751	4946
	100	1315	1857	2488	2803	3107	3404	3899	4184	4290	4555	4800
	125	1095	1579	2171	2481	2788	3097	3632	3952	4072	4373	4662
	150	937	1371	1923	2222	2525	2838	3398	3743	3875	4204	4532
	175	819	1212	1725	2011	2306	2618	3191	3554	3695	4046	4408
	200	728	1085	1563	1835	2121	2428	3006	3383	3531	3899	4290
	500	310	479	731	890	1071	1286	1761	2132	2293	2693	3241
	1000	158	248	386	477	584	716	1035	1313	1442	1761	2293
120 Volts Line to Ground	0	8080	8080	8080	8080	8080	8080	8080	8080	8080	8080	8080
	5	5670	6390	6927	7128	7292	7432	7634	7737	7773	7851	7924
	10	4282	5221	6023	6349	6625	6869	7230	7421	7488	7634	7773
	25	2421	3306	4268	4728	5156	5564	6225	6604	6743	7042	7353
	50	1390	2027	2835	3277	3725	4191	5034	5570	5776	6225	6743
	75	974	1457	2114	2496	2903	3348	4215	4810	5048	5569	6223
	100	749	1136	1683	2013	2374	2783	3621	4229	4481	5034	5776
	125	608	931	1397	1685	2007	2379	3171	3772	4027	4589	5388
	150	512	788	1194	1449	1737	2076	2820	3403	3656	4215	5048
	175	442	683	1042	1270	1531	1842	2538	3100	3347	3896	4748
	200	389	603	925	1131	1369	1654	2307	2845	3086	3621	4481
	500	159	250	392	487	601	743	1099	1431	1591	1951	2669
	1000	80	126	200	250	310	387	586	781	879	1099	1591

AB 1-86 647024? 0000382 8

Table A-14

Symmetrical Single-phase Short-circuit Currents in Amperes at Various Distances From a Distribution Transformer
Rated 120/240 Volts, 3-wire, 37.5 kVA, Z = 1.72 Percent

Transformer Secondary Voltage	Distance, Feet	Wire Size of Aluminum Conductors										
		6 AWG	4 AWG	2 AWG	1 AWG	1/0 AWG	2/0 AWG	4/0 AWG	300 MCM	350 MCM	Two 4/0 MCM	Two 350 MCM
240 Volts Line to Line	0	9040	9040	9040	9040	9040	9040	9040	9040	9040	9040	9040
	5	7579	8071	8398	8511	8602	8678	8785	8838	8856	8911	8947
	10	6390	7213	7804	8015	8188	8335	8540	8643	8679	8785	8856
	25	4181	5316	6332	6744	7099	7410	7866	8100	8183	8422	8593
	50	2582	3593	4707	5235	5725	6188	6919	7317	7461	7866	8183
	75	1855	2687	3706	4235	4755	5274	6152	6659	6847	7367	7807
	100	1445	2139	3043	3540	4049	4578	5524	6101	6320	6919	7461
	125	1182	1775	2576	3035	3518	4036	5006	5625	5865	6515	7142
	150	1000	1515	2231	2652	3106	3604	4571	5214	5468	6152	6847
	175	867	1322	1967	2354	2778	3252	4203	4856	5119	5823	6574
	200	764	1172	1758	2115	2511	2961	3887	4543	4811	5524	6320
	500	316	495	769	948	1159	1417	2026	2540	2773	3376	4291
	1000	159	252	396	493	608	755	1120	1456	1617	2026	2773
120 Volts Line to Ground	0	13830	13830	13830	13830	13830	13830	13830	13830	13830	13830	13830
	5	8099	9654	10904	11389	11792	12139	12641	12900	12991	13214	13399
	10	5513	7206	8843	9557	10184	10752	11613	12076	12241	12641	12991
	25	2755	3983	5497	6297	7089	7887	9266	10097	10408	11152	11895
	50	1492	2256	3318	3948	4627	5378	6863	7887	8297	9266	10408
	75	1021	1570	2367	2862	3417	4059	5424	6451	6881	7895	9238
	100	776	1203	1838	2242	2704	3253	4476	5449	5872	6863	8297
	125	626	975	1502	1842	2236	2712	3807	4713	5117	6062	7525
	150	524	820	1269	1562	1906	2325	3310	4151	4533	5424	6881
	175	451	707	1099	1357	1660	2034	2927	3708	4068	4906	6337
	200	396	621	969	1198	1470	1807	2624	3349	3688	4476	5872
	500	160	253	400	499	619	772	1166	1547	1737	2172	3108
	1000	80	127	202	253	315	395	605	815	922	1166	1737

Copyright National Electrical Manufacturers Association
Provided by IHS under license with NEMA
No reproduction or networking permitted without license from IHS
Not for Resale

Copyright National Electrical Manufacturers Association
Provided by IHS under license with NEMA
No reproduction or networking permitted without license from IHS
Not for Resale

Table A-15

Symmetrical Single-phase Short-circuit Currents in Amperes at Various Distances From a Distribution Transformer Rated 120/240 Volts, 3-wire, 50 kVA, Z = 1.72 Percent

Transformer Secondary Voltage	Distance, Feet	Wire Size of Aluminum Conductors										
		6 AWG	4 AWG	2 AWG	1 AWG	1/0 AWG	2/0 AWG	4/0 AWG	300 MCM	350 MCM	Two 4/0 MCM	Two 350 MCM
240 Volts Line to Line	0	12035	12035	12035	12035	12035	12035	12035	12035	12035	12035	12035
	5	9525	10351	10912	11108	11267	11400	11587	11679	11712	11808	11872
	10	7658	8936	9905	10262	10556	10807	11162	11341	11404	11587	11712
	25	4632	6127	7587	8216	8773	9273	10025	10418	10559	10959	11255
	50	2731	3913	5320	6032	6721	7396	8512	9145	9378	10025	10559
	75	1926	2852	4056	4719	5397	6102	7361	8128	8419	9216	9937
	100	1486	2239	3267	3860	4491	5173	6466	7303	7629	8512	9378
	125	1209	1841	2730	3261	3838	4481	5756	6623	6969	7899	8874
	150	1019	1562	2344	2820	3347	3948	5181	6054	6410	7361	8419
	175	881	1357	2052	2483	2966	3525	4707	5572	5932	6886	8006
	200	775	1199	1824	2217	2662	3183	4311	5160	5519	6466	7629
	500	318	499	781	967	1188	1462	2128	2714	2987	3686	4841
	1000	160	253	399	497	616	767	1149	1510	1686	2128	2987
120 Volts Line to Ground	0	18421	18421	18421	18421	18421	18421	18421	18421	18421	18421	18421
	5	9359	11584	13503	14281	14939	15515	16361	16803	16960	17340	17663
	10	6027	8169	10416	11457	12403	13283	14662	15424	15698	16361	16960
	25	2866	4235	6021	7017	8040	9113	11071	12314	12791	13925	15131
	50	1522	2329	3490	4202	4992	5895	7776	9155	9726	11071	12791
	75	1035	1604	2451	2989	3605	4337	5967	7263	7826	9147	11056
	100	784	1223	1887	2318	2819	3426	4834	6012	6541	7776	9726
	125	631	988	1534	1892	2313	2830	4060	5125	5615	6755	8675
	150	528	829	1292	1598	1961	2410	3498	4465	4917	5967	7826
	175	454	713	1116	1383	1701	2098	3072	3955	4373	5342	7127
	200	398	626	982	1219	1502	1858	2739	3549	3937	4834	6541
	500	160	254	402	503	625	781	1187	1588	1789	2249	3281
	1000	80	127	202	254	316	397	610	826	936	1187	1789

4702447 0000384 1

Copyright National Electrical Manufacturers Association
Provided by IHS under license with NEMA
No reproduction or networking permitted without license from IHS
Not for Resale

Table A-16

Symmetrical Single-phase Short-circuit Currents in Amperes at Various Distances From a Distribution Transformer Rated 120/240 Volts, 3-wire, 75 kVA, Z = 1.80 Percent

Transformer Secondary Voltage	Distance, Feet	Wire Size of Aluminum Conductors										
		6 AWG	4 AWG	2 AWG	1 AWG	1/0 AWG	2/0 AWG	4/0 AWG	300 MCM	350 MCM	Two 4/0 MCM	Two 350 MCM
240 Volts Line to Line	0	17180	17180	17180	17180	17180	17180	17180	17180	17180	17180	17180
	5	12439	13943	15002	15377	15682	15939	16298	16477	16540	16731	16855
	10	9346	11428	13133	13786	14335	14805	15479	15818	15938	16298	16540
	25	5138	7116	9261	10260	11180	12037	13371	14086	14344	15093	15652
	50	2885	4262	6039	7007	7990	9001	10781	11846	12246	13371	14344
	75	1999	3024	4442	5271	6157	7123	8974	10181	10652	11954	13219
	100	1528	2340	3505	4211	4990	5872	7661	8907	9410	10781	12246
	125	1237	1908	2891	3502	4189	4986	6672	7907	8419	9801	11397
	150	1038	1610	2459	2995	3607	4328	5903	7103	7611	8974	10652
	175	895	1392	2139	2616	3166	3822	5290	6444	6942	8268	9995
	200	786	1226	1892	2321	2820	3421	4791	5894	6379	7661	9410
	500	319	504	792	985	1216	1507	2233	2898	3216	4027	5486
	1000	160	254	402	502	624	779	1179	1564	1756	2233	3216
120 Volts Line to Ground	0	26505	26505	26505	26505	26505	26505	26505	26505	26505	26505	26505
	5	10941	14226	17346	18688	19857	20905	22478	23315	23612	24358	24984
	10	6605	9330	12482	14056	15553	17004	19383	20747	21246	22478	23612
	25	2982	4504	6612	7856	9190	10657	13522	15469	16240	18106	20221
	50	1553	2405	3671	4475	5392	6478	8880	10769	11582	13522	16240
	75	1049	1639	2536	3121	3805	4637	6585	8233	8976	10734	13532
	100	792	1243	1937	2395	2937	3608	5226	6656	7320	8880	11582
	125	636	1001	1566	1943	2391	2952	4330	5583	6177	7565	10116
	150	532	838	1315	1634	2016	2497	3696	4807	5341	6585	8976
	175	456	720	1133	1410	1743	2163	3223	4220	4704	5828	8065
	200	400	632	995	1240	1534	1908	2857	3760	4203	5226	7320
	500	161	255	404	506	630	790	1209	1628	1842	2328	3463
	1000	80	128	203	255	318	399	616	836	951	1209	1842

AB 1-86 6470247 0000385 3

Copyright National Electrical Manufacturers Association
Provided by IHS under license with NEMA
No reproduction or networking permitted without license from IHS

Table A-17

Symmetrical Single-phase Short-circuit Currents in Amperes at Various Distances From a Distribution Transformer
Rated 120/240 Volts, 3-wire, 100 kVA, Z = 1.84 Percent

Transformer Secondary Voltage	Distance, Feet	Wire Size of Aluminum Conductors										
		6 AWG	4 AWG	2 AWG	1 AWG	1/0 AWG	2/0 AWG	4/0 AWG	300 MCM	350 MCM	Two 4/0 MCM	Two 350 MCM
240 Volts Line to Line	0	22423	22423	22423	22423	22423	22423	22423	22423	22423	22423	22423
	5	15087	17370	19013	19596	20071	20468	21021	21293	21388	21709	21896
	10	10716	13611	16131	17125	17966	18691	19728	20245	20427	21021	21388
	25	5495	7858	10618	11979	13272	14509	16480	17549	17935	19122	19973
	50	2987	4501	6560	7736	8974	10292	12721	14228	14801	16480	17935
	75	2046	3139	4709	5661	6710	7892	10269	11895	12542	14389	16233
	100	1555	2407	3665	4451	5341	6376	8578	10190	10856	12721	14801
	125	1254	1951	2998	3664	4430	5340	7352	8899	9557	11374	13585
	150	1051	1640	2535	3112	3782	4590	6426	7891	8528	10269	12542
	175	904	1415	2196	2704	3298	4023	5703	7084	7696	9351	11641
	200	793	1244	1936	2390	2924	3579	5125	6424	7009	8578	10856
	500	321	507	800	997	1235	1536	2301	3018	3366	4258	5943
	1000	161	255	404	505	628	786	1197	1598	1799	2301	3366
120 Volts Line to Ground	0	35187	35187	35187	35187	35187	35187	35187	35187	35187	35187	35187
	5	12176	16458	20845	22823	24588	26195	28640	29947	30411	31661	32651
	10	7015	10204	14156	16244	18301	20359	23854	25906	26662	28640	30411
	25	3058	4687	7031	8467	10054	11857	15557	18197	19268	21958	25087
	50	1573	2455	3792	4660	5669	6891	9702	12021	13047	15557	19268
	75	1058	1662	2593	3209	3938	4842	7022	8941	9830	11968	15575
	100	797	1256	1969	2446	3016	3729	5496	7110	7876	9702	13047
	125	640	1009	1587	1976	2443	3032	4513	5898	6568	8150	11216
	150	534	843	1329	1657	2052	2554	3827	5038	5631	7022	9830
	175	458	724	1144	1427	1770	2206	3322	4396	4927	6166	8746
	200	401	635	1003	1253	1555	1941	2935	3899	4379	5496	7876
	500	161	255	406	508	634	795	1222	1653	1875	2380	3582
	1000	80	128	203	255	319	401	619	843	959	1222	1875

Not for Resale

AB 1-84 4702470 0000586 5

Copyright National Electrical Manufacturers Association
Provided by IHS under license with NEMA
No reproduction or networking permitted without license from IHS
Not for Resale

Table A-18

Symmetrical Single-phase Short-circuit Currents in Amperes at Various Distances From a Distribution Transformer Rated 120/240 Volts, 3-wire, 167 kVA, Z = 1.92 Percent

Transformer Secondary Voltage	Distance, Feet	Wire Size of Aluminum Conductors										
		6 AWG	4 AWG	2 AWG	1 AWG	1/0 AWG	2/0 AWG	4/0 AWG	300 MCM	350 MCM	Two 4/0 MCM	Two 350 MCM
240 Volts Line to Line	0	35475	35475	35475	35475	35475	35475	35475	35475	35475	35475	35475
	5	19525	23936	27475	28798	29894	30820	32120	32758	32982	33750	34194
	10	12537	17015	21545	23522	25273	26841	29158	30337	30753	32120	32982
	25	5867	8728	12461	14503	16580	18711	22417	24581	25382	27824	29729
	50	3085	4745	7148	8616	10242	12087	15831	18410	19441	22417	25382
	75	2090	3250	4988	6091	7356	8852	12131	14617	15664	18603	22048
	100	1580	2470	3826	4704	5728	6966	9803	12086	13084	15831	19441
	125	1270	1992	3102	3830	4686	5738	8214	10289	11221	13746	17359
	150	1061	1669	2608	3228	3964	4875	7064	8951	9815	12131	15664
	175	912	1435	2250	2790	3434	4237	6194	7918	8719	10847	14262
	200	799	1259	1978	2456	3029	3746	5514	7097	7841	9803	13084
	500	322	509	806	1008	1252	1565	2372	3152	3540	4519	6525
	1000	161	255	406	508	633	793	1215	1634	1847	2372	3540
120 Volts Line to Ground	0	56066	56066	56066	56066	56066	56066	56066	56066	56066	56066	56066
	5	13594	19398	26197	29608	32847	35970	41023	43855	44878	47654	49947
	10	7424	11163	16241	19169	22245	25538	31671	35595	37096	41023	44878
	25	3128	4862	7461	9124	11033	13305	18364	22348	24058	28331	34076
	50	1591	2500	3908	4842	5950	7328	10673	13641	15021	18364	24058
	75	1066	1682	2645	3292	4068	5048	7504	9790	10891	13513	18512
	100	802	1267	1999	2493	3090	3849	5782	7629	8536	10673	15021
	125	642	1016	1606	2007	2491	3110	4702	6248	7017	8813	12629
	150	536	848	1343	1679	2086	2608	3962	5289	5955	7504	10891
	175	460	728	1153	1443	1795	2246	3423	4586	5173	6532	9572
	200	402	638	1011	1265	1574	1972	3012	4047	4572	5782	8536
	500	161	256	407	510	637	800	1235	1679	1908	2430	3709
	1000	80	128	204	256	319	402	623	850	968	1235	1908

AB 1-84 4420247 0000387 7

Copyright National Electrical Manufacturers Association
Provided by IHS under license with NEMA
No reproduction or networking permitted without license from IHS
Not for Resale

Table A-19

Symmetrical Single-phase Short-circuit Currents in Amperes at Various Distances From a Distribution Transformer Rated 120/240 Volts, 3-wire, 250 kVA, Z = 3.01 Percent

Transformer Secondary Voltage	Distance, Feet	Wire Size of Aluminum Conductors										
		6 AWG	4 AWG	2 AWG	1 AWG	1/0 AWG	2/0 AWG	4/0 AWG	300 MCM	350 MCM	Two 4/0 MCM	Two 350 MCM
240 Volts Line to Line	0	33936	33936	33936	33936	33936	33936	33936	33936	33936	33936	33936
	5	20488	24812	27957	29027	29875	30557	31453	31861	32002	32694	32956
	10	13123	17851	22416	24284	25866	27209	29044	29890	30178	31453	32002
	25	6025	9043	12998	15137	17278	19416	22926	24797	25454	27898	29312
	50	3131	4849	7361	8902	10610	12535	16348	18834	19786	22926	25454
	75	2111	3300	5098	6246	7566	9128	12514	14996	16010	19168	22322
	100	1592	2500	3892	4800	5861	7149	10084	12395	13382	16348	19786
	125	1278	2011	3146	3894	4778	5866	8425	10537	11468	14195	17717
	150	1067	1682	2640	3275	4031	4970	7227	9152	10021	12514	16010
	175	916	1446	2273	2825	3485	4310	6323	8083	8891	11174	14585
	200	802	1267	1996	2484	3069	3804	5618	7234	7987	10084	13382
	500	322	511	809	1012	1259	1575	2394	3184	3576	4591	6632
	1000	161	256	406	509	634	796	1221	1643	1857	2394	3576
120 Volts Line to Ground	0	55685	55685	55685	55685	55685	55685	55685	55685	55685	55685	55685
	5	14229	20560	27961	31591	34948	38060	42761	45166	45989	48862	50560
	10	7626	11596	17073	20246	23568	27078	33371	37129	38492	42761	45989
	25	3165	4950	7657	9407	11428	13843	19205	23338	25064	29868	35458
	50	1600	2523	3963	4925	6072	7504	10998	14090	15512	19205	25064
	75	1071	1693	2671	3331	4126	5134	7672	10037	11171	14012	19203
	100	804	1273	2014	2516	3124	3899	5884	7784	8715	10998	15512
	125	644	1020	1616	2021	2513	3143	4771	6354	7140	9042	12994
	150	537	851	1349	1689	2102	2632	4011	5367	6046	7672	11171
	175	460	730	1158	1450	1806	2264	3459	4644	5242	6661	9792
	200	403	639	1015	1271	1583	1986	3041	4093	4626	5884	8715
	500	161	256	407	511	638	803	1240	1687	1918	2449	3746
	1000	80	128	204	256	320	403	624	852	971	1240	1918

AB 1-86 6470247 0000388 9

September 1984

NEMA STANDARDIZATION

The purpose of NEMA Standards, their classification and status are set forth in certain clauses of the NEMA Bylaws, which are quoted below:

Purpose of Standards

National Electrical Manufacturers Association Standards are adopted in the public interest and are designed to eliminate misunderstandings between the manufacturer and the purchaser and to assist the purchaser in selecting and obtaining the proper product for its particular need. Existence of a National Electrical Manufacturers Association Standard does not in any respect preclude any member or nonmember from manufacturing or selling products not conforming to the standard.

(Bylaw—Art. V, Sec. 1)

Definition of a Standard

A standard of the National Electrical Manufacturers Association defines a product, process or procedure with reference to one or more of the following: nomenclature, composition, construction, dimensions, tolerances, safety, operating characteristics, performance, rating, testing, and the service for which they are designed.

(Bylaw—Art. V, Sec. 2, Subsection A)

Dimensions

Where dimensions are given for interchangeability purposes, alternate dimensions satisfying the other provisions of the standards publication may be capable of otherwise equivalent performance.

(NEMA Policy Memorandum 84-2, dated June 7, 1984)

Classes of Standards

National Electrical Manufacturers Association Standards are of two classes:

1. NEMA Standard, which relates to a product commercially standardized and subject to repetitive manufacture, which standard has been approved by at least 90 percent of the members of the Subdivision eligible to vote thereon;
2. Suggested Standard for Future Design, which may not have been regularly applied to a commercial product, but which suggests a sound engineering approach to future development, which standard has been approved by at least two-thirds of the members of the Subdivision eligible to vote thereon.

(Bylaw—Art. V, Sec. 2, Subsection B)

Authorized Engineering Information

Authorized Engineering Information consists of explanatory data and other engineering information of an informative character not falling within the classification of NEMA Standard or Suggested Standard for Future Design.

(Bylaw—Art. V, Sec. 6, 1st Sentence)

Official Standards Proposal

An Official Standards Proposal is an official draft of a proposed standard which is formally recommended to an outside organization(s) for consideration, comment and/or approval.

(Bylaw—Art. V, Sec. 4, Subsection A)

Identification of Status

Standards in NEMA Standards Publications are identified in the foreword or following each standard as "NEMA Standard" or "Suggested Standard for Future Design." These indicate the status of the standard. These words are followed by a date which indicates when the standard was adopted in its present form by the Association.

The material identified as "Authorized Engineering Information" and "Official Standards Proposal" is designated similarly.

Copyright National Electrical Manufacturers Association
Provided by IHS under license with NEMA
No reproduction or networking permitted without license from IHS
Not for Resale

MOLDED CASE BREAKER SECTION
OF THE
NATIONAL ELECTRICAL MANUFACTURERS ASSOCIATION

MEMBER COMPANIES

BBC Brown Boveri, Inc.
West Columbia, SC 29171-4659

Challenger Electrical Equipment Corporation
Malvern, PA 19355

Electrical Distribution Product Div.
A Div. of Cooper Industries
Charlottesville, VA 22906

Eaton Corporation
Cutler-Hammer Products
Milwaukee, WI 53216

General Electric Company
Plainville, CT 06062

Heinemann Electric Company
Lawrenceville, NJ 08648-0800

Klockner Moeller Corporation
Natick, MA 01760

LCB Corporation
Miami, FL 33014

Siemens Energy and Automation, Inc.
Tucker, GA 30084

Square D Company
Palatine, IL 60067

Unicorn Electrical Products
Anaheim, CA 92806

The Wadsworth Electric Manufacturing Co., Inc.
Covington, KY 41012

Westinghouse Electric Corporation
Pittsburgh, PA 15275

Copyright National Electrical Manufacturers Association
Provided by IHS under license with NEMA
No reproduction or networking permitted without license from IHS
Not for Resale