9009279 0000016 176

NATIONAL ELECTRICAL MANUFACTURERS ASSOCIATION

155 East 44th Street New York, N. Y. 10017

September 1, 1976

TO ALL REPRESENTATIVES OF MEMBER COMPANIES
IN THE MOLDED CASE BREAKER SECTION

Subject: Revision #1 for the NEMA Standards Publication for Molded Case Circuit Breakers, AB 1-1975

Gentlemen:

At its meeting on May 17, 1976, the Codes and Standards Committee approved several changes in Publication No. AB 1-1975.

To bring your copy of the book up to date, please replace the following pages by the attached correspondingly numbered pages dated September 1976:

Part 2, Pages 19 and 20

Part 2, Pages 31 and 32

Part 3, Pages 3 and 4

Page 4, Pages 1 and 2

Part 6, Page 1

Part 7, Page 1

Very truly yours,

Virginia Morgan

Virginia Morgan
Standards Publications Editor

VM:lg
Attachment

Copies to General Engineering Committee
Lists A-1 through A-4
[illegible]nown holders of AB 1-1975

Copyright National Electrical Manufacturers Association
Provided by IHS under license with NEMA
No reproduction or networking permitted without license from IHS
Not for Resale

9009279 0000017 002

NATIONAL ELECTRICAL MANUFACTURERS ASSOCIATION

155 East 44th Street New York, N. Y. 10017

January 10, 1977

TO ALL REPRESENTATIVES OF MEMBER COMPANIES
IN THE MOLDED CASE BREAKER SECTION

Subject: Revision #2 for the NEMA Standards Publication for Molded Case Circuit Breakers, AB 1-1975

Gentlemen:

At its meeting on November 11, 1976, the Codes and Standards Committee approved several changes in Publication No. AB 1-1975.

To bring your copy of the book up to date, please insert the attached revised pages in their proper location. For your guidance, we are showing on the reverse side of this sheet the latest date of the pages now comprising AB 1-1975.

Very truly yours,

Virginia Morgan

VM:lg
Attachment

Virginia Morgan
Standards Publications Editor

Copies to: General Engineering Committee
Lists A-1 through A-4
All known holders of AB 1-1975

Copyright National Electrical Manufacturers Association
Provided by IHS under license with NEMA
No reproduction or networking permitted without license from IHS
Not for Resale

JANUARY 1977

The following check list shows the latest date of the pages now comprising the NEMA Standards Publication for Molded Case Circuit Breakers, AB 1-1975:

Part Number	Page Number	Date
..	i and ii	January 1977
1	1 through 5	undated
2	1 through 6	January 1977
	7 through 18	undated
	19 and 20	September 1976
	21 through 30	undated
	31 and 32	September 1976
3	1 and 2	undated
	3 and 4	September 1976
4	1 and 2	September 1976
5	1	undated
6	1	September 1976
7	1	September 1976
7A	1 and 2	January 1977
8	1 through 5	undated
9	1 through 7	undated
Appendix A	1 through 4	undated
	Tables A-3 through A-19	undated
Appendix B	1	undated

Copyright National Electrical Manufacturers Association
Provided by IHS under license with NEMA
No reproduction or networking permitted without license from IHS
Not for Resale

NATIONAL ELECTRICAL MANUFACTURERS ASSOCIATION

2101 L STREET N.W. WASHINGTON, D.C. 20037

Proposed, New and Revised Standards

January 31, 1978

TO ALL REPRESENTATIVES OF MEMBER COMPANIES
IN THE MOLDED CASE BREAKER SECTION

Subject: Revision #3 for the NEMA Standards Publication
for Molded Case Circuit Breakers, AB 1-1975

Gentlemen:

At its meeting on November 3, 1977, the Codes and Standards Committee approved several changes in Publication No. AB 1-1975.

To bring your copy of the book up to date, please insert the attached revised pages in their proper locations. For your guidance, we are showing on the reverse side of this sheet the latest date of the pages now comprising AB 1-1975.

Sincerely yours,

Nels M. Andersen

Nels M. Andersen
Standards Publications Editor

NMA:jps
Attachment

Copies to: General Engineering Committee
Lists A-1 through A-4
All known holders of AB 1-1975

Copyright National Electrical Manufacturers Association
Provided by IHS under license with NEMA
No reproduction or networking permitted without license from IHS
Not for Resale

JANUARY 1978

The following check list shows the latest date of the pages now comprising the NEMA Standards Publication for Molded Case Circuit Breakers, AB 1-1975:

Part Number	Page Number	Date
..	i and ii	January 1977
1	1 through 5	undated
2	1 through 6	January 1977
	7 through 18	undated
	19 and 20	September 1976
	21 through 30	undated
	31 and 32	September 1976
3	1 and 2	January 1978
	2A	January 1978
	3 and 4	September 1976
4	1 and 2	September 1976
5	1	undated
6	1	September 1976
7	1	September 1976
7A	1 and 2	January 1977
8	1 through 5	undated
9	1 through 7	undated
Appendix A	1 through 4	undated
	Tables A-3 through A-19	undated
Appendix B	1	undated

Copyright National Electrical Manufacturers Association
Provided by IHS under license with NEMA
No reproduction or networking permitted without license from IHS

Not for Resale

AB*1 75 ■ 2595512 0064599 1 ■

STANDARDS PUBLICATION/NO. AB 1-1975

nema

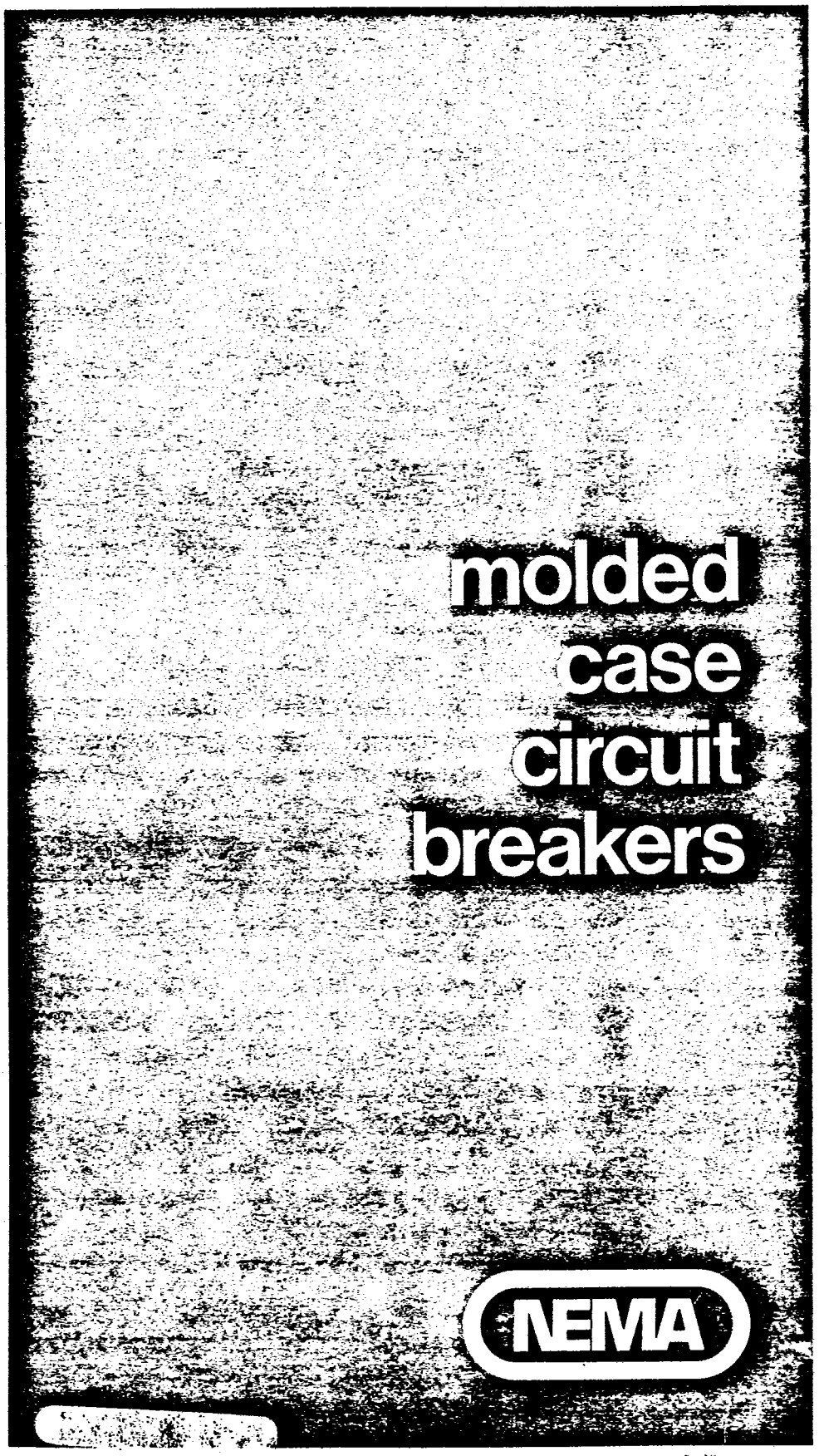

NATIONAL ELECTRICAL MANUFACTURERS ASSOCIATION ■ 155 EAST 44TH STREET, NEW YORK, N.Y. 10017

Copyright National Electrical Manufacturers Association
Provided by IHS under license with NEMA
No reproduction or networking permitted without license from IHS
Not for Resale

FOREWORD

This Standards Publication is intended to provide a basis of common understanding within the electrical community.

To assure a meaningful publication, copies were sent during the draft stage to a number of typical individuals and organizations in the public and private sector having an interest in or responsibility for the purchase, testing, application, use or inspection of this product category. The resulting comments and suggestions provided a vital user and general interest input prior to final NEMA approval and resulted in a number of substantive changes being made in this publication.

As future major revisions to this publication are proposed, it is intended to offer the same or similar individuals or organizations a further opportunity to participate in the development of this publication.

Proposed or recommended revisions should be submitted to:

Technical Director
Manager, Engineering and Safety Regulations Department
National Electrical Manufacturers Association
155 East 44th Street
New York, New York 10017

SCOPE

This Standards Publication covers single-pole and multipole air circuit breakers which are assembled as an integral unit in a supporting housing of insulating materials and which have a rated voltage up to and including 600 volts alternating current, 250 volts direct current, and a rated interrupting current of more than 1 000 amperes.

© 1975 by National Electrical Manufacturers Association

Copyright National Electrical Manufacturers Association
Provided by IHS under license with NEMA
No reproduction or networking permitted without license from IHS
Not for Resale

AB*1 75 ■ 2595512 0064601 6 ■

January 1977

MOLDED CASE CIRCUIT BREAKERS

TABLE OF CONTENTS

	Part	Page
Definitions	1	1-5
General Standards Applying to All Molded Case Circuit Breakers	2	1-32
Requirements of Underwriters Laborarories Inc.	2	1
Classification of Insulating Materials	2	1
Limits of Observable Temperature	2	1
Service Conditions	2	3
Rating Standards		
Rating Information	2	4
Frame Sizes	2	4
Rated Frequency	2	4
Rated Voltage	2	4
Calibration Setting and Basis of Rated Continuous Current	2	4
Rated Control Voltages and Their Ranges	2	4
Basis of Rated Interrupting Currents	2	4
Test and Performance Standards		
Classification of Tests	2	5
Schedule of Design Tests	2	5
Shunting Resistance for Overload Performance and Endurance Circuits	2	6
Rated Continuous Current Test	2	6
Endurance Test	2	9
Rated Interrupting Current Test	2	9
Dielectric Withstand Test	2	20
Production Tests	2	21
Field Tests	2	21
Manufacturing Standards		
Operating Mechanism	2	23
Terminal Connectors—Front-connected Circuit Breakers	2	23
Provisions of Rear-connected Breakers	2	23
Number of Nuts per Rear-connected Stud	2	23
Overcurrent Trip Elements	2	23
Spacings	2	23
Accessories	2	23
Enclosures	2	23
Marking and Warning Labels		
Warning Label Information	2	27
Marking of Circuit Breakers	2	28
Marking of Circuit Breaker Enclosures	2	30
Application Standards		
General Application	2	31
Voltage	2	31
Rated Continuous Current	2	31
Frequency	2	31
Rated Interrupting Current	2	31
Service Conditions	2	32
Overcurrent Protection for Conductors	2	32
Protection for Motors, Motor Starters and Motor Branch Circuits	2	32
Variations in Tripping Characteristics of Circuit Breakers	2	32

(Continued)

Copyright National Electrical Manufacturers Association
Provided by IHS under license with NEMA
No reproduction or networking permitted without license from IHS

Not for Resale

AB*1 75 ■ 2595512 0064602 8 ■

January 1977

TABLE OF CONTENTS

	Part	Page
Circuit Breakers with Inverse Time Automatic Tripping	3	1-4
Circuit Breakers with Instantaneous Automatic Tripping Only	4	1-2
Nonautomatic Circuit Breakers	5	1
Integrally Fused Circuit Breakers with		
Inverse Time Automatic Tripping	6	1
Instantaneous Automatic Tripping Only	7	1
Adjustable-trip Circuit Breakers	7A	1-2
Accessories		
Shunt Trip Device	8	1
Undervoltage Trip Device	8	1
Auxiliary Switches	8	2
Alarm Switch	8	3
Electrical Operator	8	4
Mechanical Interlock	8	4
Handle Locks	8	4
Direct-current Ground Current Limiter	8	4
Mechanical Trip Device	8	5
Enclosures		
General	9	1
Types	9	1
Rain Test	9	3
Hosedown Test	9	3
External Icing Test	9	3
Dripping Liquid Test	9	4
Dust Test	9	4
Design and Construction of Operating Mechanism	9	5
Spacings	9	5-6
Distance Between End of Wiring Lugs and Opposite Wall	9	6
Wiring Space	9	6
Padlocking	9	6
Determination of Short-circuit Currents in Low-voltage Systems	Appendix A	
Referenced Standards	Appendix B	

Copyright National Electrical Manufacturers Association
Provided by IHS under license with NEMA
No reproduction or networking permitted without license from IHS

Not for Resale

Part 1
DEFINITIONS

AB 1-1.01 ACCESSORIES

Devices which perform a secondary or minor duty as an adjunct or refinement to the primary or major duty of a unit of equipment.

NEMA Standard 1-18-1955.

AB 1-1.02 ALARM SWITCH

An auxiliary switch that operates only upon the tripping of the circuit breaker with which it is associated.

NEMA Standard 11-14-1974.

AB 1-1.03 AMBIENT TEMPERATURE

The temperature of the surrounding medium that comes in contact with the device or equipment. (For an enclosed circuit breaker, it is the medium outside the enclosure.)

NEMA Standard 9-4-1969.

AB 1-1.04 AUXILIARY SWITCH

See "Switch, Auxiliary".

AB 1-1.05 CALIBRATION SETTING

The adjustment of the tripping mechanism of a circuit breaker to make the breaker perform in accordance with its prescribed operating characteristics.

NEMA Standard 9-25-1963.

AB 1-1.06 CALIBRATION TEST

One which is made at a selected percentage or percentages of the circuit breaker's rated current to verify the tripping characteristics of a circuit breaker.

NEMA Standard 9-4-1969.

AB 1-1.07 CIRCUIT BREAKER

A device designed to open and close a circuit by nonautomatic means, and to open the circuit automatically on a predetermined overcurrent, without injury to itself when properly applied within its rating.

A. Air Circuit Breaker

One in which the interruption occurs in air.

B. Ambient-compensating Circuit Breaker

One in which means are provided for partially or completely neutralizing the effect which the ambient temperature may have upon the tripping characteristics.

C. Automatic-trip Circuit Breaker

One which trips under predetermined or other conditions without the intervention of an operator.

D. Current-limiting Circuit Breaker

One which (1) permits restoration of service by resetting, if necessary, and returning to the "ON" position without replacement of any of its parts or elements and (2) within its current-limiting range, limits the clearing time at rated voltage to an interval equal to or less than the first major or symmetrical current loop duration, and (3) limits peak let-through current to a value less than the peak current that would be obtained with the circuit breaker replaced by a solid conductor of the same impedance.

E. Front-connected Circuit Breaker

One in which the terminals for connecting or disconnecting conductors are accessible from the front of the breaker.

F. Integrally-fused Circuit Breaker

One in which coordinated current-limiting fuses are connected in series with the trip elements of the circuit breaker and are integral with the housing of the circuit breaker.

G. Molded Case Circuit Breaker

One which is assembled as an integral unit in a supporting and enclosing housing of insulating material.

H. Multipole Circuit Breaker

One with two or more poles which provide two or more separate conducting paths; the poles are insulated from each other and are coupled in such a manner as to operate simultaneously; except that for a circuit breaker which is rated 120/240 volts a-c or less and which has two operating poles designed for use on the ungrounded wires of a three-wire system, the automatic tripping of either pole may be independent of the other.

I. Nonautomatic Circuit Breaker

One which opens only in response to an act of an operator or by an accessory device.

J. Plug-in (Drawout-mounted) Circuit Breaker

One having disconnecting devices and in which the removable portion may be removed from the stationary portion without the necessity of unbolting connections or mounting supports.

Copyright National Electrical Manufacturers Association
Provided by IHS under license with NEMA
No reproduction or networking permitted without license from IHS

Not for Resale

K. Rear-connected Circuit Breaker

One in which the current-carrying conductors are connected to terminals accessible from the back of the breaker.

L. Ground Fault Circuit Breaker

A circuit breaker which incorporates normal circuit breaker functions and, also, trips when a fault current to ground exceeds some predetermined value. The ground fault current sensing means may or may not be integral with the circuit breaker.

NEMA Standard 11-14-1974.

AB 1-1.08 CLOSING VOLTAGE

The designated voltage which is to be applied to the closing device to close the circuit breaker.

NEMA Standard 9-25-1963.

AB 1-1.09 CURRENT-LIMITING FUSE (ALTERNATING CURRENT)

A fuse which safely interrupts all available currents within its interrupting rating and, within its current-limiting range, limits the clearing time at rated voltage to an interval equal to or less than the first major or symmetrical current loop duration and limits peak let-through current to a value less than the peak current that would be possible with the fuse replaced by a solid conductor of the same impedance.

NEMA Standard 9-25-1963.

AB 1-1.10 DIELECTRIC WITHSTAND TESTS

Tests made to determine the ability of the insulating materials and spacings used to withstand overvoltages without flashover or breakdown under specified conditions.

NEMA Standard 11-14-1974.

AB 1-1.11 DIRECT-CURRENT GROUND CURRENT LIMITER

A device which trips a circuit breaker automatically when the current through the device exceeds a predetermined value.

NEMA Standard 9-21-1967.

AB 1-1.12 DRIPTIGHT (ENCLOSURE)

So constructed or protected as to exclude falling dirt or drops of liquid under specified test conditions. See AB 1-9.06.

NEMA Standard 11-12-1970.

AB 1-1.13 DUSTTIGHT (ENCLOSURE)

So constructed as to meet the requirements of a specified dusttightness test. See AB 1-9.07.

NEMA Standard 11-12-1970.

AB 1-1.14 DUTY, OPERATING

See "Operating Duty".

AB 1-1.15 ELECTRICAL OPERATOR

A controlling device which is used to open, close and reset a circuit breaker.

NEMA Standard 9-21-1967.

AB 1-1.16 ENDURANCE TEST

One which is made to determine compliance with specified mechanical and electrical life requirements.

NEMA Standard 9-25-1963.

AB 1-1.17 ENCLOSURE

A surrounding case designed to protect:

1. Electrical device(s) against specified external conditions, and

2. Personnel against accidental contact with the enclosed device(s).

NOTE—For the description of specific enclosure types, see AB 1-9.02.

NEMA Standard 11-12-1970.

AB 1-1.18 FRAME

An assembly consisting of all parts of the circuit breaker except an interchangeable trip unit and terminal connectors.

NEMA Standard 11-14-1974.

AB 1-1.19 FRAME SIZE

A term applied to a group of molded case circuit breakers which are physically interchangeable with each other. Frame size is expressed in amperes and corresponds to the largest ampere rating available in the group. The same frame size designation may be applied to more than one group of circuit breakers. These groups may or may not be physically interchangeable with each other, whether furnished by one manufacturer or various manufacturers.

NEMA Standard 9-25-1963.

AB 1-1.20 HANDLE LOCK

One which provides for a positive means of retaining the circuit breaker handle in a desired position and may have means for locking or sealing.

NEMA Standard 9-21-1967.

Copyright National Electrical Manufacturers Association
Provided by IHS under license with NEMA
No reproduction or networking permitted without license from IHS

Not for Resale

AB*1 75 ■ 2595512 0064605 3 ■

AB 1-1.21 HAZARDOUS LOCATIONS (ENCLOSURE)

Those areas which may contain hazardous materials in sufficient quantity to create an explosion. See Article 500 of the "National Electrical Code" and the description of Type 7 and Type 9 enclosures in AB 1-9.02.

NEMA Standard 11-12-1970.

AB 1-1.22 INSTANTANEOUS

A qualifying term indicating that no delay is purposely introduced in the action of the device.

NEMA Standard 1-18-1955.

AB 1-1.23 INTERCHANGEABLE TRIP UNIT

One which can be interchanged as a unit among circuit breaker frames of the same design.

NEMA Standard 9-25-1963.

AB 1-1.24 INVERSE TIME

A qualifying term indicating that there is purposely introduced a delayed action, which delay decreases as the magnitude of the current increases.

NEMA Standard 9-25-1963.

AB 1-1.25 MAGNETIC TRIP

A. Adjustable Magnetic Trip

That part of an overcurrent trip element which contains an electromagnet which can be adjusted to trip a breaker at various values of current within a predetermined range.

B. Instantaneous Magnetic Trip

That part of an overcurrent trip element which contains an electromagnet which trips a breaker instantaneously at or above a predetermined value of current.

C. Fixed Magnetic Trip

That part of an overcurrent trip element which contains a nonadjustable electromagnet which is set to trip a breaker at or above a predetermined value of current.

NEMA Standard 9-4-1969.

AB 1-1.26 MECHANICAL INTERLOCK

A device which interlocks two circuit breakers together so that only one can be closed at any time.

NEMA Standard 9-21-1967.

AB 1-1.27 MECHANICAL TRIP DEVICE

A manual means for tripping a molded case circuit breaker after the circuit breaker has been installed.

NEMA Standard 9-21-1967.

AB 1-1.28 OPERATING DUTY (OF A SWITCHING DEVICE)

A specified kind and number of operations at stated intervals.

NEMA Standard 9-4-1969.

AB 1-1.29 OPERATING MECHANISM (EXTERNAL)

The operating mechanism of an enclosed circuit breaker is the external mechanism by which the circuit breaker is actuated to open or close the circuit.

NEMA Standard 11-12-1970.

AB 1-1.30 OPERATING MECHANISM (OF A CIRCUIT BREAKER)

The mechanism by which the contacts are actuated.

NEMA Standard 11-14-1974.

AB 1-1.31 OPERATION, UNIT

See "Unit Operation".

AB 1-1.32 OVERCURRENT TRIP ELEMENT

A device which, for a given pole of a circuit breaker, detects overcurrent and transmits the energy necessary to trip the breaker automatically. It may actuate the breaker operating mechanism directly or may form part of a trip unit.

NEMA Standard 9-25-1963.

AB 1-1.33 RAINPROOF (ENCLOSURE)

So constructed, protected or treated as to prevent rain under specified test conditions from interfering with successful operation of the apparatus. See AB 1-9.03.

NEMA Standard 11-12-1970.

AB 1-1.34 RAINTIGHT (ENCLOSURE)

So constructed or protected as to exclude rain under specified test conditions. See AB 1-9.03.

NEMA Standard 11-12-1970.

AB 1-1.35 RATED AMBIENT TEMPERATURE

The ambient temperature of a circuit breaker on which its rated continuous current is based.

NEMA Standard 9-25-1963.

Copyright National Electrical Manufacturers Association
Provided by IHS under license with NEMA
No reproduction or networking permitted without license from IHS
Not for Resale

AB 1-1.36 RATED CONTINUOUS CURRENT

The maximum direct current or rms current, in amperes, at rated frequency which a device or an assembly will carry continuously without exceeding the specified limits of observable temperature rise.

NEMA Standard 9-25-1963.

AB 1-1.37 RATED CONTROL VOLTAGE

The designated voltage which is to be applied to the closing or tripping devices to open or close a switch or circuit breaker.

NOTE--The control voltage may be allowed to vary, above or below the rated control voltage, within a specified range. The control voltage is measured at the terminals of the operating coils or electric operating means with the operating current following.

NEMA Standard 9-25-1963.

AB 1-1.38 RATED FREQUENCY

The frequency of the circuit for which the circuit breaker is designed.

NEMA Standard 9-25-1963.

AB 1-1.39 RATED INTERRUPTING CURRENT

A rating which is established under prescribed test conditions at a specified voltage and which is the maximum available current at which the circuit breaker may be applied.

NEMA Standard 11-14-1974.

AB 1-1.40 RATED VOLTAGE

The maximum voltage, rms if alternating current, at which the circuit breaker may be applied.

NEMA Standard 9-4-1969.

AB 1-1.41 RATING

The designated limit(s) of the rated operating characteristic(s) of a device.

NOTE—Such operating characteristics as current, voltage, frequency, etc., may be given in the rating.

NEMA Standard 9-4-1969.

AB 1-1.42 RESISTANT (USED AS A SUFFIX) (ENCLOSURE)

So constructed, protected or treated that the apparatus will not be damaged when subjected to the specified material or conditions for a specified time.

NEMA Standard 11-12-1970.

AB 1-1.43 SEPARABLE CONTACTS

Those parts within a circuit breaker which make or break a circuit current.

NEMA Standard 9-4-1969.

AB 1-1.44 SERVICE CONDITIONS

The conditions under which a circuit breaker is to be applied.

NEMA Standard 9-25-1963.

AB 1-1.45 SHORT TIME DELAY

A qualifying term indicating that there is a purposely introduced delayed tripping action. The short-time-delay action may have either finite or inverse time characteristics.

NEMA Standard 11-14-1974.

AB 1-1.46 SHUNT-TRIP DEVICE

A trip mechanism energized by a source of voltage which may be derived either from the main circuit or from an independent source.

NEMA Standard 11-14-1974.

AB 1-1.47 SLEET PROOF (ENCLOSURE)

So constructed or protected that the accumulation of sleet (ice) under specified conditions will not interfere with the successful operation of the apparatus including external operating mechanism(s). See AB 1-9.05.

NEMA Standard 11-12-1970.

AB 1-1.48 SLEET-RESISTANT (ENCLOSURE)

So constructed that the accumulation and melting of sleet (ice) under specified test conditions will not damage the apparatus. See AB 1-9.05.

NEMA Standard 11-12-1970.

AB 1-1.49 SWITCH, AUXILIARY

A switch which is mechanically operated by the main switching device for signalling, interlocking or other purposes. Auxiliary switch contacts may be designated as "a" or "b" as indicated below, but other contact arrangements may be used.

"a" contacts—open when the circuit breaker contacts are open and closed when the circuit breaker contacts are closed.

"b" contacts—closed when the circuit breaker contacts are open and open when the circuit breaker contacts are closed.

NEMA Standard 11-14-1974.

Copyright National Electrical Manufacturers Association
Provided by IHS under license with NEMA
No reproduction or networking permitted without license from IHS
Not for Resale

AB 1-1.50 TIGHT (USED AS A SUFFIX) (ENCLOSURE)

So constructed that the enclosure will exclude the specified material under specified conditions.

NEMA Standard 11-12-1970.

AB 1-1.51 TRIP FREE

Means the ability of a circuit breaker to have the automatic opening operation prevail over the closing operation immediately after current is established in a path of the main circuit.

NEMA Standard 9-4-1969.

AB 1-1.52 TRIPPING

The automatic opening of a circuit breaker due to an overcurrent.

NEMA Standard 9-4-1969.

AB 1-1.53 TRIPPING VOLTAGE

The designated voltage which is to be applied to the tripping device to open the circuit breaker.

NEMA Standard 9-25-1963.

AB 1-1.54 TRIP UNIT (CIRCUIT BREAKER)

A self-contained assembly of a circuit breaker comprising the means for actuating the operating mechanism to open the circuit breaker contacts automatically.

NEMA Standard 11-14-1974.

AB 1-1.55 UNDERVOLTAGE TRIP DEVICE

An opening release which permits a circuit breaker to open automatically if the voltage across the terminals of its main circuit falls below a predetermined value.

NEMA Standard 9-21-1967.

AB 1-1.56 UNIT OPERATION (OF A CIRCUIT BREAKER)

Consists of one of the following:

1. Tripping on overcurrent without purposely delayed action.

2. Closing followed immediately by its tripping on overcurrent without purposely delayed action.

The letter "O" signifies the unit operation of the circuit breaker—OPENING. The letters "CO" signify the unit operation of the circuit breaker—CLOSING-OPENING.

NEMA Standard 1-18-1955.

AB 1-1.57 WATERTIGHT (ENCLOSURE)

So constructed as to exclude water applied in the form of a hose stream under specified test conditions. See AB 1-9.04.

NEMA Standard 11-12-1970.

Copyright National Electrical Manufacturers Association
Provided by IHS under license with NEMA
No reproduction or networking permitted without license from IHS

Not for Resale

AB*1 75 ■ 2595512 0064608 9 ■

Part 2
GENERAL STANDARDS APPLYING TO ALL MOLDED CASE CIRCUIT BREAKERS

AB 1-2.01 REQUIREMENTS OF UNDERWRITERS LABORATORIES INC.

Circuit breakers which come within the scope of Underwriters Laboratories Inc. Publication No. UL 489 shall comply with the latest revisions of those standards.

NEMA Standard 9-25-1963.

AB 1-2.02 CLASSIFICATION OF INSULATING MATERIALS ▲

Temperature limits for insulating materials shall be established and designated in accordance with the procedures set forth in IEEE Publication No. 1, 1969.

NEMA Standard 11-11-1976.

IEEE Publication No. 1 states that, in the past, insulating materials have been placed arbitrarily in temperature classes. In modern technology, insulating materials are used in so many combinations and in so many ways that the concept of thermal classification for materials is no longer suitable. IEEE Publication No. 1 recognizes only two acceptable bases for thermal evaluation of insulating materials, either by test or by experience.

Insulating materials will henceforth be assigned a "Temperature Index." The temperature index is related to the temperature in degeees C at which the material will provide a specified life as determined by test or as estimated from service experience.

For practical reasons and to provide continuity with past procedures, thermal indices for insulating materials may be grouped under preferred nominal numbers as shown in Table 2-1.

Table 2-1

Number Range	Preferred Temperature Index
90 to 104	90
105 to 129	105
130 to 154	130
155 to 179	155
180 to 199	180
200 to 219	200
220 and above	No preferred indices have been established

The temperature index is a guide and does not imply a thermal classification or a limitation on use in equipment. It is used most suitably for comparing materials which have been evaluated under controlled conditions.

Authorized Engineering Information 11-11-1976.

AB 1-2.03 LIMITS OF OBSERVABLE TEMPERATURE ▲

Materials employed in the construction of a circuit breaker shall not be affected adversely when subjected to temperatures attained during normal operation of the circuit breaker.

Materials shall be considered as being affected adversely if temperatures higher than the following are obtained:

1. 60°C on thermoplastic-insulated conductors *.
2. 65°C on plain or plated copper or copper-alloy separable contacts.
3. 85°C on conductors having varnished-cloth insulation.
4. 90°C on fiber employed as electrical insulation.
5. 90°C on wood or other combustible material.
6. 100°C on urea composition.
7. 130°C on glass polyester *.
8. 150°C on melamine.
9. 150°C on phenolic composition employed as electrical insulation *.
10. The softening point of any sealing compound minus 15°C.

* This limitation does not apply to a material or compound which has been found by investigation to have adequate heat-resistant properties for higher temperatures.

The maximum temperature rise of a coil shall be not greater than that specified in Table 2-2.

NEMA Standard 11-11-1976.

▲ Revised 11-11-1976.

Copyright National Electrical Manufacturers Association
Provided by IHS under license with NEMA
No reproduction or networking permitted without license from IHS
Not for Resale

Table 2-2
Maximum Temperature Rise on Coils

	Temperature Rise °C	Temperature Rise °F
Wire-wound coils		
1. Temperature index "90" insulation *		
Thermocouple method	50	90
Resistance method	70	126
2. Temperature index "105" insulation *		
Thermocouple method	65	117
Resistance method	85	153
3. Temperature index "130" insulation *		
Thermocouple method	85	153
Resistance method	105	189
4. Temperature index "over 220" insulation	No limit specified	
Single-layer series coils with exposed surfaces uninsulated or enameled		
1. Temperature index "105" insulation *		
Thermocouple method	90	162

* Described in IEEE Publication No. 1.

The thermocouple method consists of the determination of temperature by thermocouples applied to the hottest accessible part of the device.

The resistance method consists of the determination of temperature by comparison of the resistance of a winding at the temperature to be determined with the resistance at a known temperature.

The temperature rise of a copper winding by the measurement of its electrical resistance when the resistance at some reference temperature is known shall be determined in accordance with the following formula:

$$\text{Temperature Rise} = (234.5 + t_c)\frac{R_h}{R_c} - (234.5 + t_a)$$

Where—

R_c = cold resistance of coil.

R_h = hot resistance of coil.

t_c = temperature, degrees C, of coil when cold resistance was measured.

t_a = ambient temperature, degrees C, during the last quarter of the test.

Copyright National Electrical Manufacturers Association
Provided by IHS under license with NEMA
No reproduction or networking permitted without license from IHS
Not for Resale

AB 1-2.04 SERVICE CONDITIONS

A. Usual Service Conditions

Breakers conforming to these standards shall be suitable for operation at their standard rating:

1. When and where the ambient temperature does not exceed 40°C*.

2. Where the altitude does not exceed 6000 feet (1830 meters)

* Circuit breakers are calibrated for rated ambient temperature. Operation at other temperatures may affect the rated continuous current of some circuit breakers.

NEMA Standard 9-25-1963.

B. Unusual Service Conditions

The following service conditions are considered to be unusual and should be brought to the attention of the manufacturer.

1. Exposure to corrosive or explosive fumes.

2. Exposure to dust or vapors.

3. Operation at excessively high (above 40°C) or low (under 0°C) ambient temperatures.

4. Abnormal vibrations.

5. Operation at altitudes over 6000 feet (1830 meters).

6. Unusual operating duties.

Authorized Engineering Information 9-25-1963.

Copyright National Electrical Manufacturers Association
Provided by IHS under license with NEMA
No reproduction or networking permitted without license from IHS

Not for Resale

RATING STANDARDS

AB 1-2.10 RATING INFORMATION

The rating of a circuit breaker shall include the following:

1. Rated voltage*.
2. Rated frequency (where necessary).
3. Rated continuous current.
4. Rated interrupting current.
5. Rated ambient temperature.

*Unless designated as alternating or direct current, circuit breakers shall be suitable for operation on both alternating and direct current.

NEMA Standard 9-25-1963.

AB 1-2.11 FRAME SIZES

Frame sizes shall be 50, 100, 125, 150, 200, 225, 400, 600, 800, 1000, 1200, 1600, 2000, 2500, 3000 and 4000 amperes.

NEMA Standard 11-14-1974.

AB 1-2.12 RATED FREQUENCY

The rated frequency of alternating-current circuit breakers shall be 60 hertz.

NEMA Standard 9-25-1963.

AB 1-2.13 RATED VOLTAGE

The rated voltages* shall be:

Alternating Current	Direct Current
120	125
120/240	125/250
240	250
277	
277/480	
480	
600	

* Unless designated as alternating or direct current, circuit breakers shall be suitable for operation on both alternating and direct current.

NEMA Standard 9-4-1969.

AB 1-2.14 CALIBRATION SETTING AND BASIS OF RATED CONTINUOUS CURRENT

The calibration setting shall be based on an ambient temperature of 40°C ± 3°C, except for nonautomatic circuit breakers and those having instantaneous magnetic automatic tripping.

A circuit breaker shall be capable of carrying continuously a current equal to its rated continuous current at an ambient temperature of 40°C ± 3°C.

NEMA Standard 9-25-1963.

AB 1-2.15 RATED CONTROL VOLTAGES AND THEIR RANGES

When measured at the terminals of the operating coils or electric operating means with full operating current flowing, rated voltages and their ranges for the control and power supplies of the operating mechanism of circuit breakers shall be as follows:

Rated Control Voltage, Volts	Closing Voltage Range, Volts, Solenoid or Motor Operated	Tripping Voltage Range, Volts
	DIRECT CURRENT*	
48	.....	28-60
125	90-130	70-140
250	180-260	140-280
	ALTERNATING CURRENT	
115	95-125	95-125
230	190-250	190-250
460	380-500	380-500

* Control from exciter circuits is not recommended.

NEMA Standard 9-25-1963.

AB 1-2.16 BASIS OF RATED INTERRUPTING CURRENTS

The rated interrupting current of a circuit breaker shall be given in symmetrical or asymmetrical amperes (rms if alternating current) at a given voltage rating. It shall be based on the test procedure, applicable operating duty (duty cycle), performance and conditions given in AB 1-2.35.

NEMA Standard 11-14-1974.

Copyright National Electrical Manufacturers Association
Provided by IHS under license with NEMA
No reproduction or networking permitted without license from IHS
Not for Resale

TEST AND PERFORMANCE STANDARDS

AB 1-2.30 CLASSIFICATION OF TESTS

The tests which are made on molded case circuit breakers shall include:

1. Design tests (see AB 1-2.31 through AB 1-2.36).
2. Production tests (see AB 1-2.37).

For field tests, see AB 1-2.38.

A. Design Tests

Design tests are those which are made to determine the adequacy of the design of a particular type, style or model of molded case circuit breaker to meet its assigned ratings and to operate satisfactorily under normal service application conditions or under special conditions if specified. Design tests are made only on representative new breakers to substantiate the ratings assigned to all breakers of similar design and are not contemplated under normal production.

B. Production Tests

Production tests are those which are made to check the quality and uniformity of the workmanship and materials used in the manufacture of molded case circuit breakers.

NEMA Standard 9-25-1963.

AB 1-2.31 SCHEDULE OF DESIGN TESTS

Design tests shall include the following, performed in the sequence given:

		Circuit Breakers with			Integrally Fused Circuit Breakers with	
		Inverse Time Automatic Tripping (Parts 3 and 7A) ▲	Instantaneous Magnetic Automatic Tripping (Part 4)	Non-automatic Circuit Breakers (Part 5)	Inverse Time Automatic Tripping (Part 6)	Instantaneous Magnetic Automatic Tripping (Part 7)
1.	Dielectric withstand test	AB 1-2.36	AB 1-2.36	AB 1-2.36	AB 1-2.36	AB 1-2.36
2.	Calibration test	AB 1-3.07	AB 1-4.06	.....	AB 1-3.07	AB 1-4.06
3*.	Overload performance test....	AB 1-3.08	AB 1-4.07	AB 1-5.05	AB 1-3.08	AB 1-4.07
4.	Rated continuous current test..	AB 1-2.33	AB 1-2.33	AB 1-2.33	AB 1-2.33	AB 1-2.33
5*.	Endurance test	AB 1-2.34	AB 1-2.34	AB 1-2.34	AB 1-2.34	AB 1-2.34
6.	Calibration test (repeated) ...	AB 1-3.07	AB 1-4.06	.....	AB 1-3.07	AB 1-4.06
7.	Interrupting current test for breakers having frame sizes shown in Table 2-4, Page 10.	AB 1-2.35 or UL 489	UL 508†	.....	AB 1-2.35 or UL 489	AB 1-2.35 or UL 489
8.	Rated interrupting current test for breakers having interrupting current ratings higher than those shown in Table 2-4 for the particular frame size. Test should be conducted on a new circuit breaker	AB 1-2.35 or UL 489	AB 1-2.35 or UL 508†	.....	AB 1-2.35 or UL 489	AB 1-2.35 or UL 489

* See AB 1-2.32 for shunting resistance.

† This test shall be made in combination with the device with which the circuit breaker is intended to be used and in the type of enclosure designed for this purpose. Tests shall be conducted in accordance with Underwriters Laboratories Inc. Publication No. UL 508, or latest revision thereof, where applicable.

NEMA Standard 11-11-1976.

Copyright National Electrical Manufacturers Association 11-1976.
Provided by IHS under license with NEMA
No reproduction or networking permitted without license from IHS
Not for Resale

AB 1-2.32 SHUNTING RESISTANCE FOR OVERLOAD PERFORMANCE AND ENDURANCE CIRCUITS (DESIGN TEST)

Reactive components of the load may be connected in parallel if they are of the air-core type, but no reactive components shall be connected in parallel with resistors, except that an air-core reactor in any phase may be shunted by a resistor, in which the loss is approximately 1 percent of the total power consumption in that phase.

The resistance per phase shall be determined as follows:

	Shunt Resistance per Phase, Ohms	
	Power Factor 0.45-0.50	Power Factor 0.75-0.80
Single Phase	$\frac{163\ E}{I}$	$\frac{52\ E}{I}$
Three Phase	$\frac{94\ E}{I}$	$\frac{30\ E}{I}$

Where—

E — line potential in volts.

I — line current in amperes.

NEMA Standard 11-14-1974.

AB 1-2.33 RATED CONTINUOUS CURRENT TEST (DESIGN TEST)

A. Breakers in Nonventilated Enclosures

A circuit breaker for use in a nonventilated enclosure shall be tested without an enclosure under the conditions described in items 1 through 13, shall operate without tripping, shall not attain a temperature at any point high enough to constitute a fire hazard or to affect injuriously any materials used in the device, and shall not show temperature rises at specific points greater than those indicated in items 3, 11, 13 and par. D.

1. The test current shall be 100 percent of rated continuous current except as otherwise indicated in item 13.

2. The temperature of the ambient air shall be 25°C ± 3°C and shall be determined by placing either thermometers or thermocouples in the vicinity of the circuit breaker being tested.

3. The temperature rise on a part of a circuit breaker where an insulated conductor or a bus bar is connected shall not exceed 50°C. See item 9.

4. A circuit breaker having wiring terminals shall be connected with not less than 4 feet of black Type RH, TW or THW copper wire per terminal, except as noted in item 5. The wire size shall correspond to the rating of the circuit breaker as given in Table 2-9, Pages 24 and 25. Insulation of a color other than black may be used if all concerned concur.

5. A circuit breaker rated 1 600 amperes or more may be tested with copper bus bars instead of with wire if agreeable to those concerned. The bus bars shall be of the size shown in the following table and at least 4 feet in length. The spacing between multiple bus bars shall be 1/4 inch with no intentionally greater spacing except as necessary at the individual terminals of the circuit breaker. To facilitate test connections, cables of any convenient size and number as required for the test current may be used to connect the bus bars to the source of supply.

Frame Size, Amperes	Bus Bars per Terminal	
	Number	Size, Inches
1600	2	1/4 x 3
2000	2	1/4 x 4
2500	2	1/4 x 5
2500	4	1/4 x 2 1/2
3000	4	1/4 x 4
4000	4	1/4 x 5

6. If a circuit breaker rated less than 1 600 amperes has terminals which have no provision for wire (bolt-on circuit breaker), the connections to those terminals during the temperature test shall be made with copper bus bars. The size of the bus bars used for the temperature test shall be such that the current density will be 1 000 amperes per square inch of copper except that, when the circuit breaker is intended for use with a smaller bus bar, the smaller bus bar shall be used. The length of the bus bar shall not exceed 6 inches, and the bus bars shall terminate in one or more wire connectors. The wire connectors shall be wired in accordance with item 4. The

Copyright National Electrical Manufacturers Association
Provided by IHS under license with NEMA
No reproduction or networking permitted without license from IHS
Not for Resale

combined length of the bus bar and the wire shall be not less than 4 feet. See Figure 2-1, Page 8.

7. A circuit breaker which has formed terminals intended for connection only to mating parts (plug-in circuit breaker) shall be tested with mating parts of the most adverse (smallest) size and configuration with which the circuit breaker is to be used. The receiving device mating parts shall terminate in one or more pressure wire connectors. The type and length of the wire shall be in accordance with item 6. Temperatures shall be measured on the receiving device as shown in Figure 2-2, Page 8.

8. In the case of a circuit breaker which is marked for use on direct current only, the temperature test may be conducted with direct current. All other circuit breakers shall be tested with single-phase alternating current except that polyphase circuit breakers may be tested with either polyphase or single-phase current.

9. If the points where wires or bus bars are to be attached are located on integral or separable parts that extend from the circuit breaker housing, the test procedure shall be in accordance with items 10 through 13.

10. Connections shall be made to the intended points on the circuit breaker using wire or bus bars as indicated in items 4 and 5.

11. The temperature rise at the point where the wire or bus bars are connected shall not exceed 50°C. See Figure 2-3, Page 8.

12. If the studs, links, or other extension members have a cross section such that the current density when they are carrying 100 percent of rated current is not greater than 1 000 amperes per square inch for copper or 800 amperes per square inch for aluminum, the temperature rise on the extensions shall not exceed 50°C.

13. If the current density in the extension members exceeds the values given in item 12, an untested circuit breaker shall be subjected to a temperature test. It shall be installed in an enclosure which is representative of the smallest enclosure with which the circuit breaker is likely to be used. With the circuit breaker carrying 80 percent of its maximum rated current, the temperature rise on field wiring terminals shall not exceed 50°C. See Figure 2-3, Page 8.

B. Circuit Breakers in Ventilated Enclosures

A circuit breaker which is intended for use only in a ventilated enclosure shall be tested in that enclosure at 80 percent of its continuous current rating.

C. Continuous Operation at 100 Percent of Ampere Rating

A circuit breaker which is intended for continuous operation at 100 percent of its ampere rating shall be heat tested in an enclosure which is representative of the smallest enclosure specified by the manufacturer for use with that circuit breaker. Enclosures for circuit breakers rated 800 amperes or more may be ventilated in accordance with par. B.

The electrical connections shall be made with copper bus bars having a maximum current density of 1 000 amperes per square inch for circuit breakers rated less than 1600 amperes. For higher ratings, the bus bar sizes shall be in accordance with the table shown in par. A.5.

The temperature rise at connections to external bus bars shall not exceed 60°C. The temperature of insulating material used in the circuit breakers shall not exceed the recognized limits for the material involved. The circuit breaker shall not trip during this test.

D. Materials

Materials used in the construction of a circuit breaker shall not be affected adversely by the temperatures to which they are exposed during the temperature test.

Materials will be considered to be affected adversely if they attain temperature rises greater than those given in AB 1-2.03. This limitation does not apply to a material or compound which has been investigated and has been found to have heat-resistant properties.

Copyright National Electrical Manufacturers Association
Provided by IHS under license with NEMA
No reproduction or networking permitted without license from IHS
Not for Resale

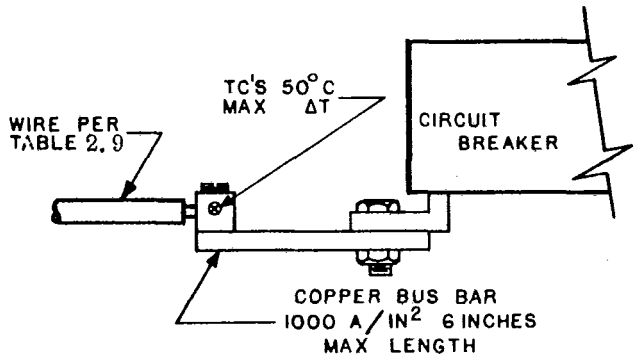

Fig. 2-1
CONNECTION FOR "BOLT-ON" CIRCUIT BREAKER RATED LESS THAN 1 600 AMPERES

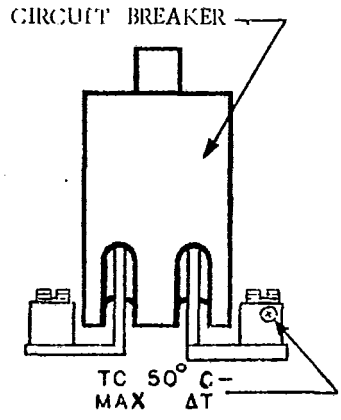

Fig. 2-2
CONNECTION FOR "PLUG-IN" CIRCUIT BREAKER

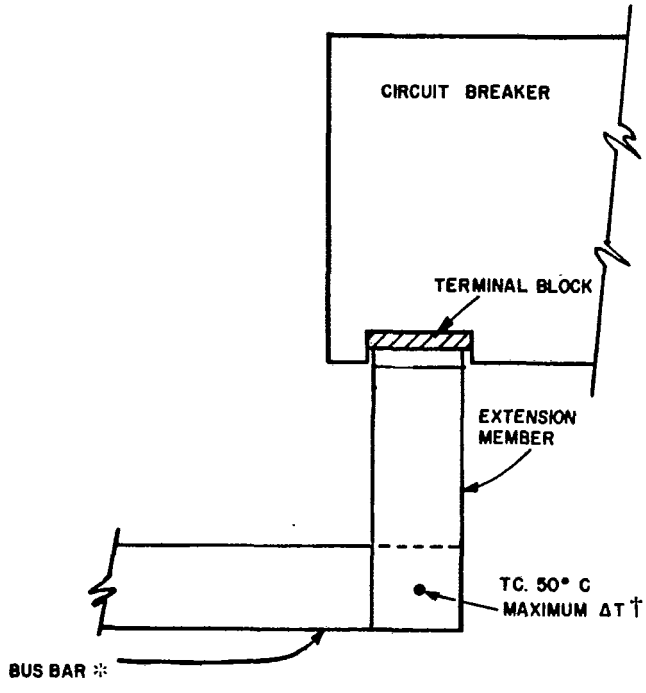

* See AB 1-2.33, Par. A.5.

† When tested at 100 percent current and when tested at 80 percent current in enclosure.

Fig. 2-3
CONNECTION FOR CIRCUIT BREAKER WITH EXTENSION MEMBER

NOTE—Fig. 2-1, 2-2 and 2-3 quoted from UL 489 by permission of Underwriters Laboratories Inc.

Copyright National Electrical Manufacturers Association
Provided by IHS under license with NEMA
No reproduction or networking permitted without license from IHS
Not for Resale

E. Coils

The maximum temperature rise of a coil, when operating at its rated voltage or current, shall be not greater than that given in AB 1-2.03.

Temperature readings shall be made with thermocouples and a suitable potentiometer-type indicating instrument. A temperature shall be considered to be constant when three successive readings, taken at intervals of ten percent of the previous elapsed duration of the test, but not less than 10-minute nor more than 20-minute intervals, indicate no change. The thermocouples shall consist of wires no larger than 24 AWG.

NEMA Standard 11-14-1974.

When thermocouples are used in the determination of temperatures in connection with the heating of electrical devices, it is common practice to use thermocouples consisting of 30 AWG iron and constantan wires and a potentiometer-type indicating instrument; such equipment should be used whenever referee temperature measurements are necessary.

Authorized Engineering Information 11-14-1974.

AB 1-2.34 ENDURANCE TEST (DESIGN TEST)

The test procedure to determine that a circuit breaker is capable of suitable endurance performance shall be as follows:

1. The circuit breaker shall be operated in such a manner as to make and break a current equal to its rated continuous current at rated voltage and rated frequency and with a lagging power factor of 0.75 to 0.80 if alternating current, or resistance load if direct current. The number and rate of operations shall be as specified in Table 2-3, Page 10.

2. The circuit breaker shall then be operated without load for the number and rate of operations shown in Table 2-3.

3. The circuit breaker shall be considered as having satisfactorily passed its endurance test if no electrical or mechanical failure occurs.

NEMA Standard 9-4-1969.

AB 1-2.35 RATED INTERRUPTING CURRENT TEST (DESIGN TEST)

In addition to the interrupting current ratings shown in Table 2-4, Page 10, a circuit breaker may have one or more of the additional interrupting current ratings shown in Table 2-5 and shall be so marked.

Table 2-5
Additional Interrupting Current Ratings, Rms Symmetrical Amperes

7500 *	22 000	42 000	100 000
10 000 *	25 000	50 000	125 000
14 000	30 000	65 000	150 000
18 000	35 000	85 000	200 000

* Applicable only to circuit breakers having continuous current ratings of 100 amperes or less (frame size) and voltage ratings of 250 volts or less.

The test procedure to be used to determine the ability of a circuit breaker to meet the interrupting current ratings given in Tables 2-4 and 2-5 shall be as follows:

A. Measurement of Total Amperes

The total amperes shall be determined by measuring the current flow in the test circuit with the circuit breaker and its conductors omitted or short-circuited.

B. Alternating Current

1. In alternating-current circuits, the current measured shall be the rms total current, including the direct-current component.

2. The current shall be measured at an instant one-half cycle (on a 60-cycle basis) after the short circuit occurs.

3. The current shall be calculated in accordance with the latest revision of ANSI Publication No. C37.5 or Underwriters Laboratories Inc. Publication No. UL 489.

4. For a three-phase test circuit, the rms total current shall be the average of all three phases. For a single-phase test circuit, one measurement with the circuit synchronously closed shall be made to determine the current in that circuit. The closing angle shall be such as to produce maximum current offset for the power factor employed.

Copyright National Electrical Manufacturers Association
Provided by IHS under license with NEMA
No reproduction or networking permitted without license from IHS
Not for Resale

Table 2-3
Number and Rate of Operations (See AB 1-2.34)

Frame Size, Amperes	Cycles of Operation per Minute*	Number of Cycles of Operation		
		With Current	Without Current	Total
50	6	6 000	4 000	10 000
100	6	6 000	4 000	10 000
125	5	4 000†	4 000	8 000†
150	5	4 000	4 000	8 000
200	5	4 000	4 000	8 000
225	5	4 000	4 000	8 000
400	4	1 000	5 000	6 000
600	4	1 000	5 000	6 000
800	1	500	3 000	3 500
1 000	1	500	2 000	2 500
1 200	1	500	2 000	2 500
1 600	1	500	2 000	2 500
2 000	1	500	2 000	2 500
2 500	1	500	2 000	2 500
3 000	1‡	400	1 100	1 500
4 000	1‡	400	1 100	1 500

*For circuit breakers rated more than 800 amperes, the endurance test may, at the option of the manufacturer, be conducted in groups of 100 operations with load. Operations without load may be conducted between groups of operations with load at the option of the manufacturer.

† Where tests are required on samples having ratings of 100 amperes or less, 250 volts or less, the number of operations shall be the same as for the 100-ampere frame size.

‡ The rate of operation shall be one cycle per minute for the first ten operations; thereafter the operations shall be in groups of five (at one cycle per minute) with an interval between groups that is agreeable to all concerned.

Table 2-4
Interrupting Current Ratings, Rms Symmetrical Amperes (See AB 1-2.35)

Frame Size, Amperes	One Pole	Two Pole		Three Pole	
	Amperes	Per Pole, Amperes	Common, Amperes	Per Pole, Amperes	Common, Amperes
100 amperes maximum at 250 volts maximum	5 000	5 000	5 000	4 330	5 000
100 amperes maximum at 251-600 volts	10 000	10 000	10 000	8 660	10 000
101-800 amperes at any voltage	10 000	10 000	10 000	8 660	10 000
801-1200 amperes at any voltage	.....	14 000	14 000	12 120	14 000
1 201-1 600 amperes at any voltage	.....	14 000	20 000	14 000	20 000
1 601-2 000 amperes at any voltage	.....	14 000	25 000	14 000	25 000
2 001-2 500 amperes at any voltage	.....	20 000	30 000	20 000	30 000
2 501-3 000 amperes at any voltage	.....	25 000	30 000	25 000	35 000
3 001-4 000 amperes at any voltage	.....	30 000	45 000	30 000	45 000

Copyright National Electrical Manufacturers Association
Provided by IHS under license with NEMA
No reproduction or networking permitted without license from IHS
Not for Resale

C. Power Factor of Test Circuit

The power factor of the test circuit, with the required current flowing, shall be in accordance with the following table, except that a lower power factor may be used. Resistance and reactance components of the impedance in the line shall not be connected in parallel, except that an air-core reactor, in any phase, may be shunted by resistance, the voltampere loss in which is approximately 0.6 percent of the reactive voltamperes in the air-core reactor in that phase.

Rated Interrupting Current, Amperes	Power Factor
10000 and less	0.45-0.50
10001 to 20000	0.25-0.30
Above 20000	0.15-0.20

D. Measurement of Power Factor

1. The power factor shall be measured at an instant one-half cycle (on a 60-cycle basis) after the short circuit occurs.

2. To determine the power factor of the circuit, both the total asymmetrical rms amperes and symmetrical rms amperes shall be measured in accordance with the latest revision of ANSI Publication No. C37.5 or Underwriters Laboratories Inc. Publication No. UL 489.

   The ratio M_A or M_M shall be calculated as follows:

   Ratio M_A (for three-phase tests) =

   $$\frac{\text{(Average of 3 phases) Asymmetrical rms amperes}}{\text{(Average of 3 phases) Symmetrical rms amperes}}$$

   Ratio M_M (for single-phase tests) =

   $$\frac{\text{Asymmetrical rms amperes}}{\text{Symmetrical rms amperes}}$$

   Using ratio M_A or M_M, the power factor shall be determined from Fig. 2-4, Page 13, or, for more accurate values, from Table 2-6, Page 12.

E. Direct Current

In direct-current circuits, the current measured shall be the maximum value. The time constant in direct-current tests shall be not less than the following:

Rated Interrupting Current, Amperes	Minimum Time Constant, Seconds
10000 or less	0.003
Over 10000	0.008

See Fig. 2-5, Page 13, for time constant measurements.

F. Operating Duty (Duty Cycle)

1. Unit operations shall be of two types: an O cycle where the circuit breaker opens the circuit only and a CO cycle where the circuit breaker closes the circuit, followed immediately by its opening without purposely delayed action.

2. The operating duty (duty cycle) of a circuit breaker, except fused breakers, shall consist of an O unit operation followed at a 2-minute interval, or as soon thereafter as the circuit breaker can be reset, by a CO unit operation. This is the so-called O-CO duty cycle.

3. For integrally fused circuit breakers, see AB 1-6.06 and AB 1-7.06.

G. Test Circuit

1. Single-pole circuit breakers shall be tested on a single-phase circuit. See Fig. 2-6, Page 14, for test circuit.

2. Two-pole circuit breakers shall be tested with both poles in series. See Fig. 2-7, Page 15, for test circuit.

3. Three-pole circuit breakers shall be tested on a three-phase circuit. See Fig. 2-8, Page 16, for test circuit.

(Continued on Page 17)

Copyright National Electrical Manufacturers Association
Provided by IHS under license with NEMA
No reproduction or networking permitted without license from IHS
Not for Resale

Table 2-6 (See AB 1-2.35, Par. D)

Short Circuit Power Factor, Percent	Short Circuit X/R Ratio	Multiplying Factor: Maximum 1 Phase Rms Amperes at 1/2 Cycle (Curve M_M)	Multiplying Factor: Average 3 Phase Rms Amperes at 1/2 Cycle (Curve M_A)	Short Circuit Power Factor, Percent	Short Circuit X/R Ratio	Multiplying Factor: Maximum 1 Phase Rms Amperes at 1/2 Cycle (Curve M_M)	Multiplying Factor: Average 3 Phase Rms Amperes at 1/2 Cycle (Curve M_A)
0	∞	1.732	1.394	29	3.3001	1.139	1.070
1	99.995	1.696	1.374	30	3.1798	1.130	1.066
2	49.990	1.665	1.355	31	3.0669	1.121	1.062
3	33.318	1.630	1.336	32	2.9607	1.113	1.057
4	24.980	1.598	1.318	33	2.8605	1.105	1.053
5	19.975	1.568	1.301	34	2.7660	1.098	1.049
6	16.637	1.540	1.285	35	2.6764	1.091	1.046
7	14.251	1.511	1.270	36	2.5915	1.084	1.043
8	12.460	1.485	1.256	37	2.5109	1.078	1.039
8.5	11.723	1.473	1.248	38	2.4342	1.073	1.036
9	11.066	1.460	1.241	39	2.3611	1.068	1.033
10	9.9499	1.436	1.229	40	2.2913	1.062	1.031
11	9.0357	1.413	1.216	41	2.2246	1.057	1.028
12	8.2731	1.391	1.204	42	2.1608	1.053	1.026
13	7.6270	1.372	1.193	43	2.0996	1.049	1.024
14	7.0725	1.350	1.182	44	2.0409	1.045	1.022
15	6.5912	1.330	1.171	45	1.9845	1.041	1.020
16	6.1695	1.312	1.161	46	1.9303	1.038	1.019
17	5.7967	1.294	1.152	47	1.8780	1.034	1.017
18	5.4648	1.277	1.143	48	1.8276	1.031	1.016
19	5.1673	1.262	1.135	49	1.7790	1.029	1.014
20	4.8990	1.247	1.127	50	1.7321	1.026	1.013
21	4.6557	1.232	1.119	55	1.5185	1.015	1.008
22	4.4341	1.218	1.112	60	1.3333	1.009	1.004
23	4.2313	1.205	1.105	65	1.1691	1.004	1.002
24	4.0449	1.192	1.099	70	1.0202	1.002	1.001
25	3.8730	1.181	1.093	75	0.8819	1.0008	1.0004
26	3.7139	1.170	1.087	80	0.7500	1.0002	1.00005
27	3.5661	1.159	1.081	85	0.6197	1.00004	1.00002
28	3.4286	1.149	1.075	100	0.0000	1.00000	1.00000

Copyright National Electrical Manufacturers Association
Provided by IHS under license with NEMA
No reproduction or networking permitted without license from IHS
Not for Resale

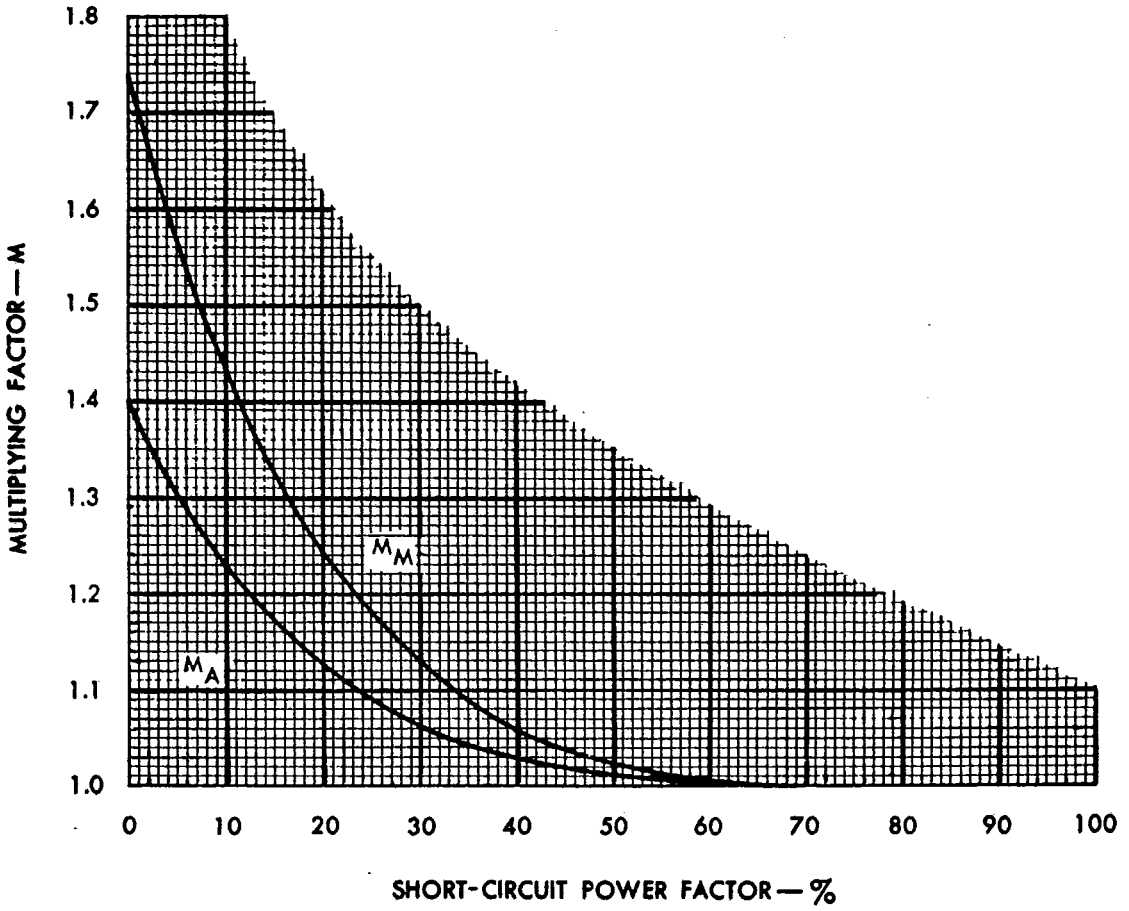

Multiplying factors to obtain short circuit asymmetrical current from symmetrical values, at an instant one-half cycle (on a 60-cycle basis) after initiation of a fault.

Fig. 2-4

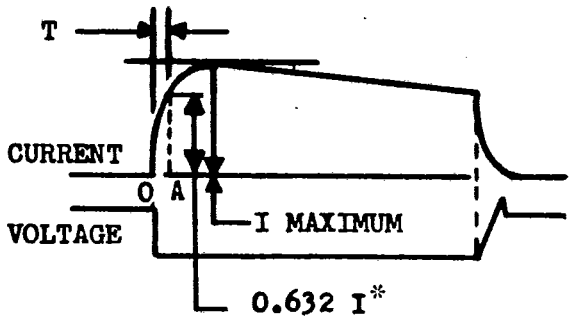

* I = E/R

The value of the time constant is given by the abscissa OA corresponding to the ordinate 0.632 I of the oscillograph of calibration of the circuit.

Fig. 2-5
DETERMINATION OF THE SHORT-CIRCUIT TIME CONSTANT (OSCILLOGRAPHIC METHOD) OF DIRECT-CURRENT CIRCUITS

NOTE—Fig. 2-5 is quoted from UL 489 by permission of Underwriters Laboratories Inc.

Copyright National Electrical Manufacturers Association
Provided by IHS under license with NEMA
No reproduction or networking permitted without license from IHS
Not for Resale

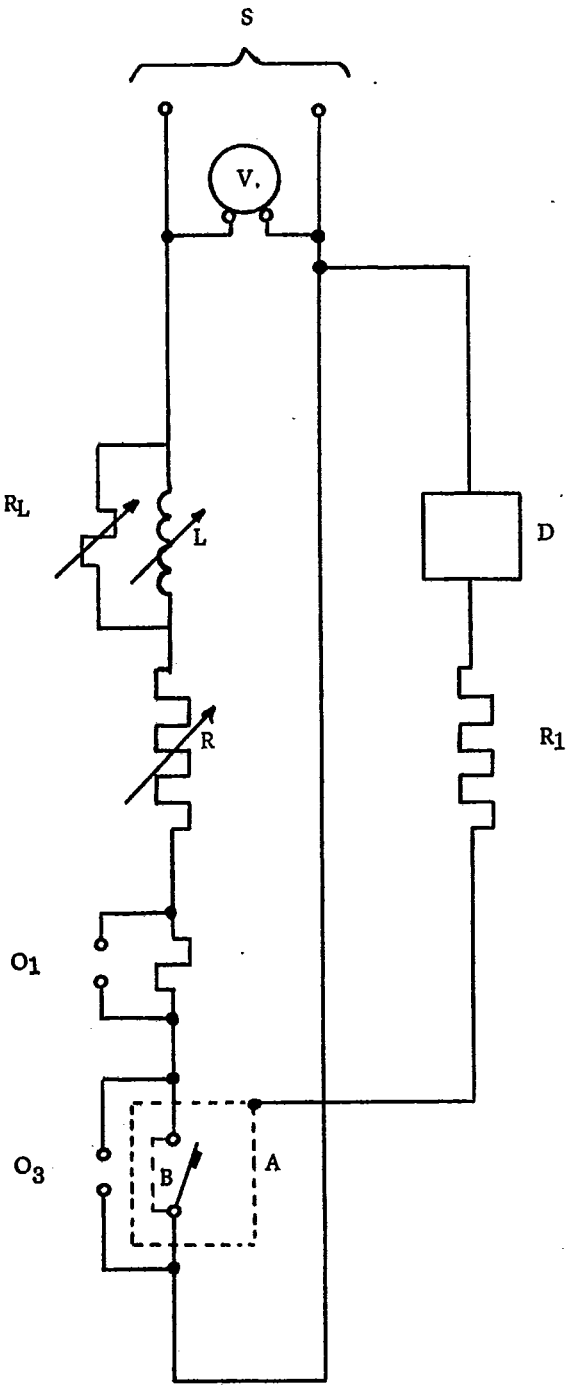

S — supply

R — adjustable resistor

L — adjustable reactor

A — circuit breaker under test

B — temporary connections for calibration

V — voltmeter

O_1 — recording current element*

O_3 — recording voltage element

D — device for the detection of a fault current

R_1 — resistors limiting the current in device D

R_L — shunting resistance

*O_1 can be on the line or load side of the test breaker.

Fig. 2-6
REPRESENTATIVE TEST CIRCUIT FOR
SINGLE-POLE CIRCUIT BREAKERS TESTED ON A SINGLE-PHASE CIRCUIT

Copyright National Electrical Manufacturers Association
Provided by IHS under license with NEMA
No reproduction or networking permitted without license from IHS

Not for Resale

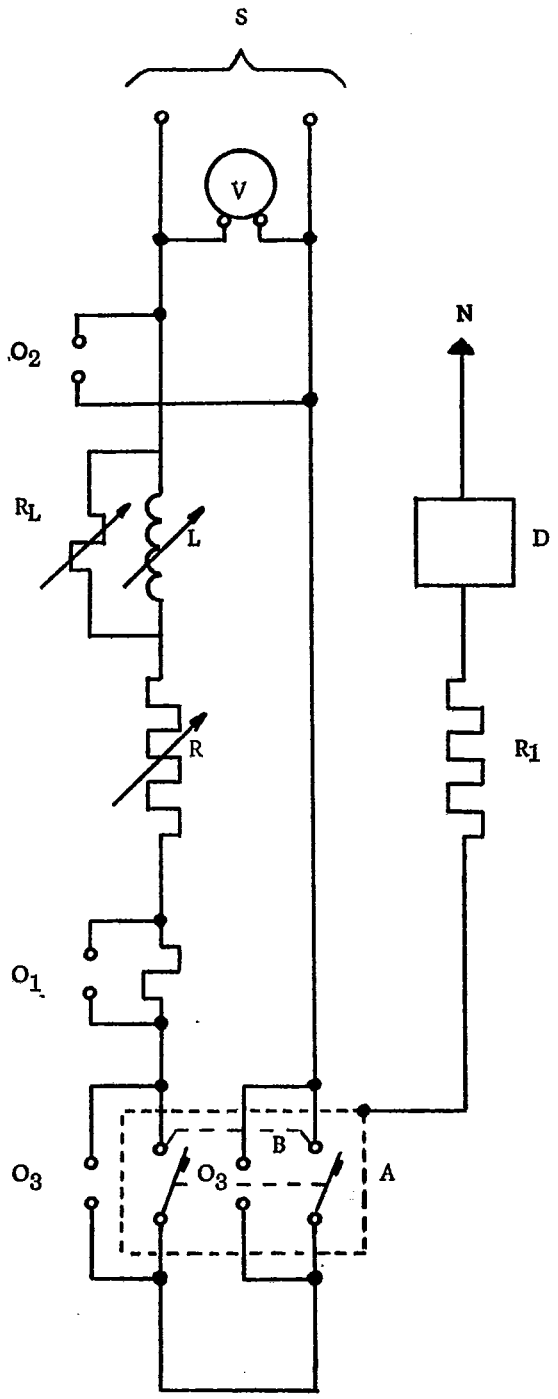

S — supply

R — adjustable resistor

L — adjustable reactor

A — circuit breaker under test

B — temporary connections for calibration

V — voltmeter

O_1 — recording current element*

O_2 and O_3 — recording voltage elements

D — device for the detection of a fault current

R_1 — resistors limiting the current in device D

N — to the midpoint of the supply or to its artificial midpoint

R_L — shunting resistance

*O_1 can be on the line or load side of the test breaker.

Fig. 2-7
REPRESENTATIVE TEST CIRCUIT FOR
TWO-POLE CIRCUIT BREAKERS TESTED WITH BOTH POLES IN SERIES

Copyright National Electrical Manufacturers Association
Provided by IHS under license with NEMA
No reproduction or networking permitted without license from IHS
Not for Resale

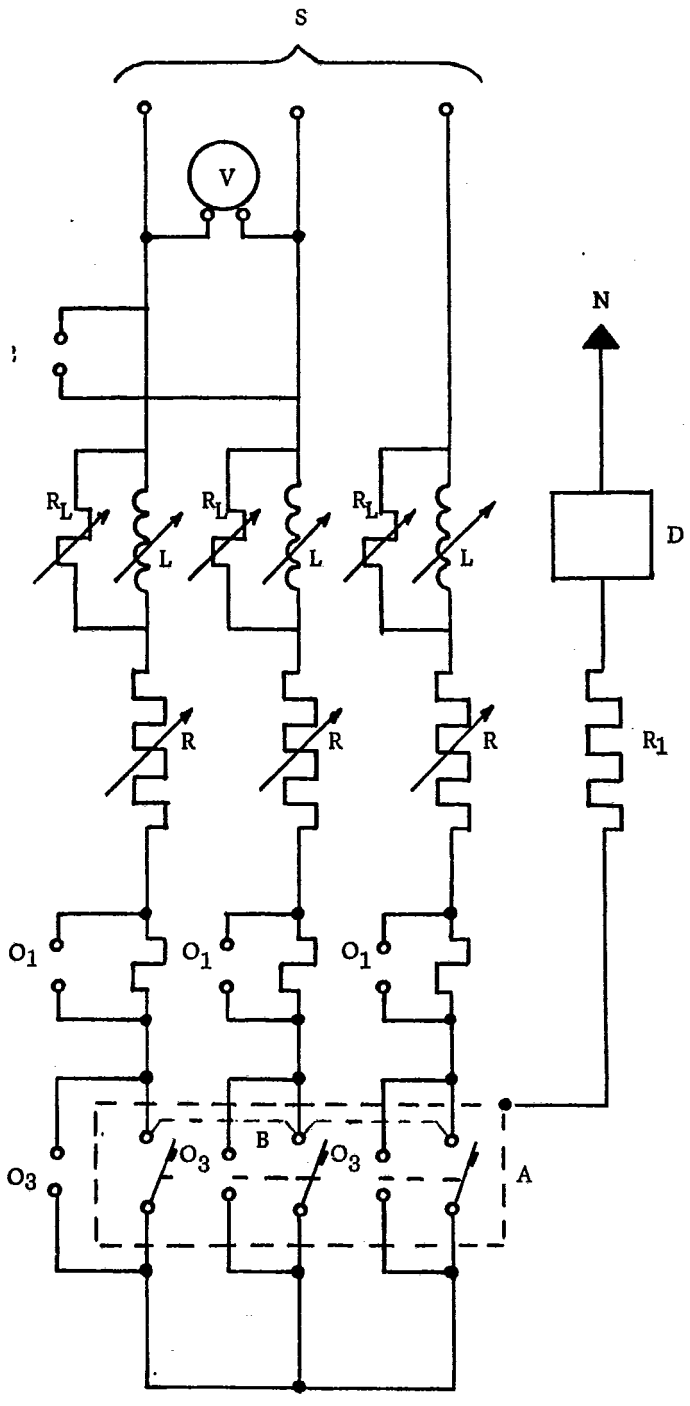

S — supply

R — adjustable resistors

L — adjustable reactors

A — circuit breaker under test

B — temporary connections for calibration

V — voltmeter

O_1 — recording current elements*

O_2 and O_3 — recording voltage elements

D — device for the detection of a fault current

R_1 — resistors limiting the current in device D

N — to the neutral of the supply or to its artificial neutral

R_L — shunting resistance

*O_1 can be on the line or load side of the test breaker.

Fig. 2-8
REPRESENTATIVE TEST CIRCUIT FOR
THREE-POLE CIRCUIT BREAKERS TESTED ON A THREE-PHASE CIRCUIT

Copyright National Electrical Manufacturers Association
Provided by IHS under license with NEMA
No reproduction or networking permitted without license from IHS
Not for Resale

AB*1 75 ■ 2595512 0064624 7 ■

H. Interrupting Performance (Table 2-4)

1. To substantiate the interrupting current ratings shown in Table 2-4 (Part 2 Page 10), a circuit breaker shall perform successfully when operated under the short-circuit conditions described in items 2 and 3.

   The test shall be made on a circuit breaker which has previously been subjected to tests 1, 2, 3, 4, 5 and 6 in the sequence shown in AB 1-2.31.

   At the end of the tests described in items 2 through 14, the following conditions shall exist:

   a. There shall be no electrical or mechanical failure of the circuit breaker.
   b. The 30-ampere fuse that is connected to indicate arc-over to the enclosure or grounded metal shall not be ruptured.
   c. Cotton or cloth indicators shall not be ignited.
   d. There shall be no damage to the insulation of conductors used to wire the device.
   e. After the final operation, the circuit breaker shall show continuity in the closed position at rated voltage.

2. A circuit breaker shall be connected in accordance with Fig. 2-9 and shall be subjected to the number and type of operations indicated in Table 2-7. Successive operations shall be conducted by alternately imposing the short circuit on the circuit breaker (O operation) by means of any suitable switching device and closing the circuit breaker on the short circuit (CO operation). At the option of the manufacturer, the common or three-phase operation may be conducted first, provided that O-CO-O alternate operations are maintained.

3. The time interval between the short-circuit operations of a circuit breaker shall be 2 minutes, except that the time interval may be extended to allow the circuit breaker to be reset, but shall not exceed 1 hour.

4. When the circuit breaker is mounted in the test enclosure, three thicknesses of cloth shall be taped to the inside sidewalls of the enclosure so as to cover the entire sidewall within 1/2 inch of the front and rear vertical edges. This cloth shall be taped into position using a 3/4-inch-wide tape appliedalong the vertical edges of the cloth.

Table 2-7
Short-Circuit Operations* (See Par. H.2 Above)

Number of Poles	Frame Size, Amperes	Circuit Breaker AC Voltage Rating	Letters Indicate Diagram in Figure 2-9						Total Number of Operations
			Operations on Each Pole			Common Operations			
			O	CO	O	O	CO	O	
1	All	120, 240, 277, 480 or 600	A	A	A	..	..	..	3
1	All	120/240 (tested in pairs)-	..	..	..	B	B	B	3
2	All	240, 480 or 600	E	E	..	D	..	..	5
2	All	120/240	..	..	..	C	C	C	3
2	0-1200	277/480	L	L	..	C	..	..	5
2	All	1Ø - 3Ø	E	E	..	H	..	..	5
3	0-1200	240, 480 or 600	G	G	..	F	..	..	7
3	1201-Up	240, 480 or 600	G	G	..	F	F	..	8
3	All	120/240	..	..	..	J	J	J	3
3	0-1200	277/480	K	K	..	I	..	..	7
3	1201-Up	277/480	K	K	..	I	I	..	8

*For the 125/250-volt direct-current rating, the number of operations is the same as for the 120/240-volt alternating-current rating. For the 250-volt direct-current rating, the number of operations is the same as for the 240-volt alternating-current rating.

Copyright National Electrical Manufacturers Association
Provided by IHS under license with NEMA
No reproduction or networking permitted without license from IHS
Not for Resale

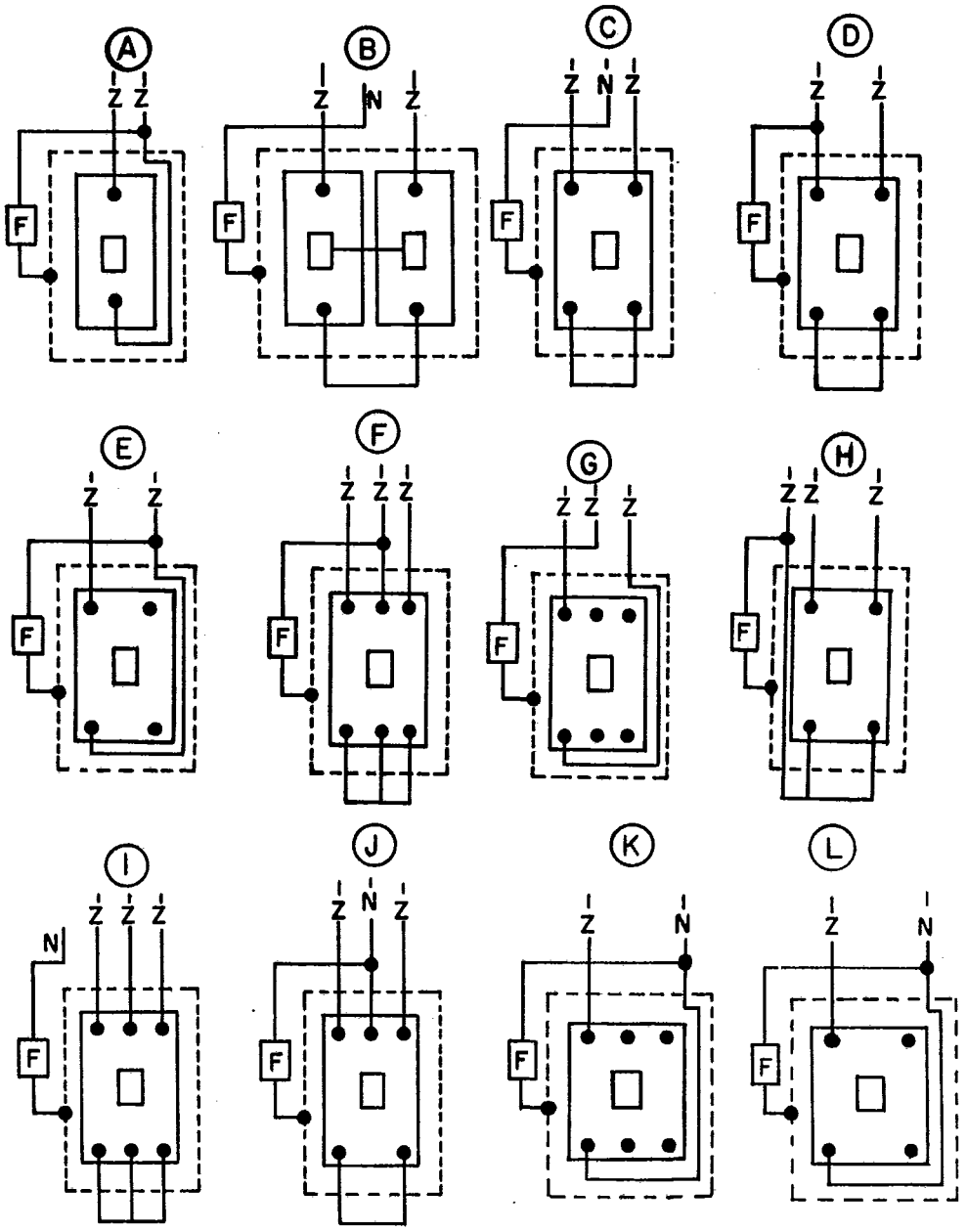

N — Neutral

Z — Limiting Impedance

F — 30-ampere "ground" Fuse —— Enclosure

Fig. 2-9
SHORT-CIRCUIT TEST CONNECTION DIAGRAMS

NOTE—Fig. 2-9 is quoted from UL 489 by permission of Underwriters Laboratories Inc.

Copyright National Electrical Manufacturers Association
Provided by IHS under license with NEMA
No reproduction or networking permitted without license from IHS
Not for Resale

5. A cotton pad at least 1/2 inch thick and having a length and width four times the handle opening but not less than 3 inches in either dimension shall be centered and secured not more than 1/2 inch from the end of the circuit breaker handle. If a handle extension longer than 1 inch is used, the cotton pad shall be firmly supported and anchored to the extension. The cotton pad shall be supported on either a solid surface or on 1/2-inch-mesh hardware cloth. A small opening may be made in a cotton pad to pass a plunger to operate a push-type circuit breaker.

6. A circuit breaker which is intended for use in a ventilated enclosure shall be tested in that enclosure. A cotton pad indicator at least 1/2 inch thick shall be attached to the outside of and shall completely cover any louvers or other openings.

7. The cloth specified in items 4 through 6 shall be bleached cheesecloth, 36 inches wide, running 14 to 15 yards per pound, and having what is known to the trade as a "count of 32 by 28." In placing the cloth in position, the material shall be folded in such a manner that cut or torn edges will not be exposed directly to the arc or flash resulting from the opening of the circuit breaker. The cotton pad shall be surgical cotton such as is commonly used for medical purposes.

8. The circuit breaker shall be mounted as it would be in actual service, with the door or cover and any other openings, including unused knockout openings, closed. The knockout openings shall be closed on the outside of the enclosure by means of tape. The line terminals shall be connected to a suitable supply circuit, and the leads for both line and load connections shall be as described in item 9. Any impedance which may need to be added to limit the current shall be connected in the circuit on the line side of the circuit breaker. The open-circuit voltage of the supply circuit shall be not less than 100 percent nor more than 105 percent of the rated voltage of the circuit breaker, or a higher voltage may be employed if agreeable to those concerned.

9. The circuit breaker under test shall be subjected to all of the operations required for the short-circuit test using only one set of line and load leads, i.e., without replacement of any lead during the test. All leads shall consist of Type TW or THW copper wires of the sizes shown in Table 2-9, Pages 24 and 25, corresponding to the continuous current rating of the circuit breaker, except that the leads on 480- and 600-volt circuit breakers rated at 15 amperes or less may be 12 AWG and a circuit breaker rated 1600 amperes or more may be tested with copper bus bars having a cross-section not less than that indicated in par. A.5 of AB 1-2.33. Line terminal leads shall be 4 feet long. Load terminal leads shall be 10 inches long per terminal for multipole operation and 4 feet long for single-pole operation except that, for the 600-ampere and larger frame size, leads of any AWG size that are 4 feet long and that were included in the calibrated circuit may be used as load leads for multipole operation and as extension leads for single-pole operation. ▲

10. If a circuit breaker rated less than 1600 amperes has terminals which have no provision for wire (bolt-on circuit breaker), the connections to those terminals for the short-circuit test shall be in accordance with par. A.6 of AB 1-2.33, except that the combined length of the bus bars and the wires shall be in accordance with item 9.

11. A circuit breaker which has formed terminals intended for connection only to mating parts (plug-in circuit breaker) shall be connected for the short-circuit test in accordance with par. A.7 of AB 1-2.33, except that the length of the test leads shall be in accordance with item 9.

12. If points where wires or bus bars are to be attached are located on integral or separable parts that extend from the circuit breaker housing, the connections for the short-circuit test shall be made to the intended points on these extension members using wire leads or bus bars as indicated in item 9.

▲ Revised 5-17-1976.

Copyright National Electrical Manufacturers Association
Provided by IHS under license with NEMA
No reproduction or networking permitted without license from IHS
Not for Resale

13. A circuit breaker which is intended for use on a direct-current system shall be tested with direct current, using a test circuit that is as nearly noninductive as possible. The circuit breaker shall be so connected that the potential of the frame and/or enclosure will be positive with respect to the nearest arcing point.

14. A circuit breaker which is intended for use on an alternating-current system only shall be tested with alternating current at rated frequency. The power factor of the test circuit with the required current flowing shall be in accordance with par. C, except that a lower power factor may be employed if agreeable to those concerned. Reactive components of the impedance in the line may be connected in parallel if they are of the air-core type, but no reactive components shall be connected in parallel with resistors, except that an air-core reactor(s) in any phase may be shunted by a resistor having a voltampere loss of approximately 0.6 percent of the reactive voltamperes in the air-core reactor(s) in that phase, or having a resistance as calculated from the formula $R = \frac{E}{I}$.

I. Interrupting Performance (Table 2-5)

1. To substantiate the interrupting current ratings shown in Table 2-5, Page 9, one O-CO duty cycle shall be applied.

2. The test shall be made on a circuit breaker which has not been subjected to any tests other than the dielectric withstand and calibration tests. The continuous current rating which permits highest let-through current shall be used.

3. The circuit breaker shall be connected to the circuit with insulated copper wires not more than 4 feet in length for each line and load terminal and of a size corresponding to that shown in AB 1-2.51.

4. At the end of a test to establish its rated interrupting current, the circuit breaker shall be in the following condition:

   a. Mechanical—The circuit breaker shall be in working mechanical condition.

   b. Electrical—The circuit breaker shall be capable of withstanding the dielectric withstand test described in AB 1-2.36, except that the dielectric test voltage shall be twice the voltage of the test circuit but never less than 900 volts and shall be gradually increased from 0 to the prescribed voltage. A circuit breaker having inverse time automatic tripping shall also be capable of tripping automatically when carrying 250 percent of its rated continuous current within the maximum tripping times as set forth in Table 3-2. If the pole under test does not trip within the time specified, the current shall be immediately increased to 400 percent of rated continuous current and the pole shall trip within 2 additional minutes. This additional 400 percent test shall be made on only one pole of a multipole breaker.

NEMA Standard 5-17-1976.

AB 1-2.36 DIELECTRIC WITHSTAND TEST (DESIGN TEST)

The circuit breaker shall be given a dielectric withstand test as follows:

A. Test Voltage

The test voltage shall be 1000 volts plus twice the rated voltage of the circuit breaker and shall be applied continuously for a period of 60 seconds. As an alternative, the circuit breaker may be tested for 1 second with a voltage which is 20 percent higher than that specified for the 60-second test.

B. Points of Application of Test Voltage

The test voltage shall be applied as follows:

1. With the Circuit Breaker Contacts Open
   a. Between live parts and metal parts which are normally grounded.
   b. Between line and load terminals.

2. With the Circuit Breaker Contacts Closed
   a. Between live parts and metal parts which are normally grounded.
   b. Between terminals of opposite polarity.

C. Frequency and Wave Shape of Test Voltage

The frequency shall be 60 hertz and the shape of the wave shall conform to good commercial practice.

NEMA Standard 9-25-1963.

Copyright National Electrical Manufacturers Association
Provided by IHS under license with NEMA
No reproduction or networking permitted without license from IHS
Not for Resale

AB*1 75 2595512 0064628 4

AB 1-2.37 PRODUCTION TESTS

Such production tests as experience indicates are necessary to produce circuit breakers which meet all design tests shall be run.

NEMA Standard 9-25-1963.

AB 1-2.38 FIELD TESTS

On occasion, molded case circuit breakers of the time-delay/instantaneous type are checked to determine that they will perform their intended function of protecting electrical conductors against overloads. For this purpose, the following procedure is recommended:

A. New Circuit Breakers (A check for possible damage during shipment or storage)

1. Inspect the breaker visually for physical damage.
2. Perform several mechanical ON-OFF operations.
3. Make a circuit continuity check on each pole with the circuit breaker in the closed position.
4. If desired, apply 300 percent of breaker rated continuous current to each pole to determine that the circuit breaker will trip on an overload. See Table 2-8, Page 22.

B. Circuit Breaker That Has Been In Service

1. Remove the breaker from the circuit. Make sure that the disconnecting device ahead of the breaker is "OFF" and that no power is on the breaker to be tested.
2. Inspect the breaker visually for physical damage or evidence of overheating at terminals.
3. Perform several mechanical ON-OFF operations.
4. Apply 300 percent of breaker rated continuous current to each pole to determine that the circuit breaker will trip on an overload. See Table 2-8.
5. If a millivolt drop test is desired, consult the manufacturer for voltage values and detailed test procedures. If millivolt drops are above the manufacturer's limits, check for loose connections at the terminals and, if the breaker is of the interchangeable trip-unit type, at trip-unit connections.
6. Make an insulation resistance test using a megger. Resistance should be not less than one megohm.
7. When reinstalling the breaker, make sure all connections are tightened in accordance with manufacturer's recommendations.

Authorized Engineering Information 3-17-1971.

Copyright National Electrical Manufacturers Association
Provided by IHS under license with NEMA
No reproduction or networking permitted without license from IHS
Not for Resale

Table 2-8
Values for Overcurrent Trip Test
(at 300 Percent of Rated Continuous Current of Breaker) (See AB 1-2.38)

Voltage, Volts	Range of Rated Continuous Current, Amperes	Tripping Time, Seconds: Minimum: Thermal Electronic Sensing Breakers	Tripping Time, Seconds: Minimum: Magnetic Breakers	Tripping Time, Seconds: Maximum	Maximum Tripping Times for Cable Protection*
(1)	(2)	(3)	(4)	(5)	(6)
240	15-45	3	..	50	100
240	50-100	5	..	70	200
600	15-45	5	5	80	100
600	50-100	5	5	150	200
240	110-225	10	5	200	300
600	110-225	10	..	200	300
600	250-450	25	..	250	300
600	500-600	25	10	250	350
600	700-1200	25	10	450	600
600	1400-2500	25	10	600	750
600	2501-4000	25	10	600	750

*These values are based on heat tests conducted by circuit breaker manufacturers on conductors in conduit.

NOTE—For additional related information write the Secretary of the Molded Case Breaker Section, NEMA, 155 East 44th Street, New York, N.Y. 10017, and request the pamphlet "Procedures for Verifying Performance of Molded Case Circuit Breakers."

Copyright National Electrical Manufacturers Association
Provided by IHS under license with NEMA
No reproduction or networking permitted without license from IHS
Not for Resale

AB*1 75 ■ 2595512 0064630 2 ■

MANUFACTURING STANDARDS

AB 1-2.50 OPERATING MECHANISM

The operating mechanism of automatic circuit breakers shall be of the mechanically trip-free type.

NEMA Standard 1-18-1955.

AB 1-2.51 TERMINAL CONNECTORS—FRONT-CONNECTED CIRCUIT BREAKERS

Terminal connectors shall be furnished or made available for all front-connected circuit breakers.

These terminal connectors shall accommodate one or more of the copper or aluminum wire sizes (but not necessarily both) shown in Table 2-9, Pages 24 and 25.

NEMA Standard 11-14-1974.

AB 1-2.52 PROVISIONS FOR REAR-CONNECTED CIRCUIT BREAKERS

Provisions may be made for straps, bus-bar connections or studs. The minimum diameter of rear-connected copper studs and the minimum cross-sectional area of copper straps shall be as given in the Table 2-10, Page 26. (When the trip unit of a circuit breaker is changed to a larger rating, the studs or straps shall be changed accordingly.)

NEMA Standard 11-14-1974.

AB 1-2.53 NUMBER OF NUTS PER REAR-CONNECTED STUD

All rear-connected round studs shall be provided with a minimum of three nuts for clamping the circuit breaker to the mounting support and to the electrical connections.

NEMA Standard 9-25-1963.

AB 1-2.54 OVERCURRENT TRIP ELEMENTS

In automatic trip circuit breakers, an overcurrent trip element shall be provided in each pole. All overcurrent tripping devices, whether interchangeable or noninterchangeable, shall be sealed against tampering.

NEMA Standard 1-18-1955.

AB 1-2.55 SPACINGS

The spacings in the circuit breaker shall be not less than those indicated in Table 2-11, Page 26.

Soldering lugs or pressure wire connectors shall be prevented from turning so as not to reduce the spacings given in Table 2-11, except that if such minimum or greater spacings are maintained when lugs are turned 30 degrees toward each other or toward other uninsulated live or grounded parts, no means to prevent turning need be provided.

NEMA Standard 9-25-1963.

AB 1-2.56 ACCESSORIES

See Part 8.

AB 1-2.57 ENCLOSURES

See Part 9.

Copyright National Electrical Manufacturers Association
Provided by IHS under license with NEMA
No reproduction or networking permitted without license from IHS
Not for Resale

Table 2-9
Terminal Current and Conductor Size (See AB 1-2.51)

Terminal Current, Amperes	Copper Conductor		Aluminum or Copper-clad Aluminum Conductor	
	Paralleled	Size	Paralleled	Size
15 or less	...	14 AWG	...	12 AWG
20	...	12 AWG	...	10 AWG
25	...	10 AWG	...	10 AWG
30	...	10 AWG	...	8 AWG
35	...	8 AWG	...	6 AWG
40	...	8 AWG	...	6 AWG
45	...	6 AWG	...	4 AWG
50	...	6 AWG	...	4 AWG
60	...	4 AWG	...	3 AWG
70	...	4 AWG	...	2 AWG
80	...	3 AWG	...	1 AWG
90	...	2 AWG	...	1/0† AWG
100	...	1 AWG	...	1/0† AWG
110	...	1 AWG	...	1/0 AWG
125	...	1/0 AWG*	...	2/0 AWG
150	...	1/0 AWG	...	3/0 AWG
175	...	2/0 AWG	...	4/0 AWG
200	...	3/0 AWG	...	250 MCM
225	...	4/0 AWG	...	300 MCM
250	...	250 MCM	...	350 MCM
275	...	300 MCM	...	500 MCM

(Continued)

*No. 1 Type RH, RHW, RUH, THW, THWN, or XHHW copper conductor may be used if the circuit breaker is so marked.

† No. 1 Type RH, RHH, RHW, THW, THWN, or XHHW aluminum conductor may be used if the circuit breaker is so marked.

Copyright National Electrical Manufacturers Association
Provided by IHS under license with NEMA
No reproduction or networking permitted without license from IHS
Not for Resale

AB*1 75 ■ 2595512 0064632 6 ■

Table 2-9 (Continued)
Terminal Current and Conductor Size (See AB 1-2.51)

Terminal Current, Amperes	Copper Conductor		Aluminum or Copper-clad Aluminum Conductor	
	Paralleled	Size	Paralleled	Size
300	...	350 MCM	...	500 MCM
325	...	400 MCM	two	4/0 AWG
350	...	500 MCM	two	4/0 AWG
400	two	3/0 AWG	two	250 MCM
450	two	4/0 AWG	two	300 MCM
500	two	250 MCM	two	350 MCM
550	two	300 MCM	two	500 MCM
600	two	350 MCM	two	500 MCM
700	two	500 MCM	three	350 MCM
800	three	300 MCM	three	400 MCM
1 000	three	400 MCM	four or three	350 or 600 MCM
1 200	four three	350 or 600 MCM	four	500 MCM
1 400	four	500 MCM	five	500 MCM
1 600	five four	400 or 600 MCM	six	600 MCM
2 000	six five	400 or 600 MCM	six	600 MCM
2 500	eight seven six	400, 500, or 600 MCM	eight seven nine	600, 750, or 500 MCM
3 000	nine eight seven	400, 500, or 600 MCM	ten nine eight	500, 600, or 750 MCM
4 000	twelve eleven ten	400, 500, or 600 MCM	thirteen twelve eleven	500, 600, or 750 MCM

Copyright National Electrical Manufacturers Association
Provided by IHS under license with NEMA
No reproduction or networking permitted without license from IHS
Not for Resale

Table 2-10 (See AB 1-2.52)

Frame Size, Amperes	Maximum Rating of Trip Unit, Amperes	Stud Diameter, Inches, and Thread Sizes	Straps, Cross-sectional Area, Square Inches
100	100	3/8-16	0.100
125	125	7/16-14	0.125
150	150	7/16-14	0.150
225	225	1/2-13	0.225
400	225	1/2-13	0.400
400	400	3/4-16	0.400
600	225	1/2-13	0.600
600	400	3/4-16	0.600
600	600	1-12	0.600
800	225	1/2-13	0.800
800	400	3/4-16	0.800
800	800	1 1/8-12	0.800
1000	600	1-12	1.000
1000	1000	1 1/8-12	1.000
1200	1200	1 1/4-12	1.200
1600	1600	.....	1.600
2000	2000	.....	2.000
2500	2500	.....	2.500
3000	3000	.....	4
4000	4000	.....	5

Table 2-11
Spacings (See AB 1-2.55)

	Minimum Spacing, Inches									
	At Terminals				Other Than At Terminals					
	Between Terminals of Opposite Polarity		Between Terminals and Any Grounded Metal*		Between Uninsulated Live Parts of Opposite Polarity		Between Uninsulated Live Parts and Any Grounded Metal*			
	A		B		C		D†		E‡	
Circuit Breaker Rating, Volts	Through Air	Over Surface	Through Air	Over Surface	Through Air	Over Surface	Through Air	Over Surface	Through Air	Over Surface
0-125	1/2	3/4	1/2	1/2	1/4	3/8	1/2	1/2	1/4	3/8
126-300	3/4	1 1/4	1/2	1/2	1/4	3/8	1/2	1/2	1/4	3/8
301-600	1	2	1/2	1	3/8	1/2	1/2	1	3/8	1/2

*The spacing to the enclosure or breaker mounting means may be reduced if an acceptable liner of insulating material, not less than 1/32 inch in thickness, is used to provide the required spacing through air.

† If indentation or deformation of the ultimate enclosure or breaker mounting means may reduce spacings to less than those indicated in Column E.

‡ If indentation or deformation of the ultimate enclosure or breaker mounting means will not affect spacings.

Copyright National Electrical Manufacturers Association
Provided by IHS under license with NEMA
No reproduction or networking permitted without license from IHS
Not for Resale

AB*1 75 ■ 2595512 0064634 T ■

MARKING AND WARNING LABELS

AB 1-2.70 WARNING LABEL INFORMATION

A. Outside of Enclosure

To make the user aware of immediate or potential hazards in their application, installation, use or maintenance, enclosed circuit breakers (with the exception of those units used in panelboards and switchboards) shall be conspicuously marked on the outside of the enclosure with the following text (or effective equivalent) and symbol, and shall reflect the following format. Where enclosures have trim or a dead front, labels may be placed on the trim or dead front.

DANGER: Hazard of electrical shock or burn.
See instructions inside cover.

The symbol for danger shall have the proportions shown in Figure 2-10.

Vivid red Munsell Notation 7.5R 4.0/14 shall be the predominant visual color for either the signal word "DANGER" and the symbol or for background. Black, white or metallic may be used for contrast. These colors may be used either for the lettering or the background.

This requirement is not intended to rule out the use of other labels or markings which are required to comply with other nationally recognized standards or applicable laws or regulations, such as radiation warnings, or which may be deemed necessary by the manufacturer.

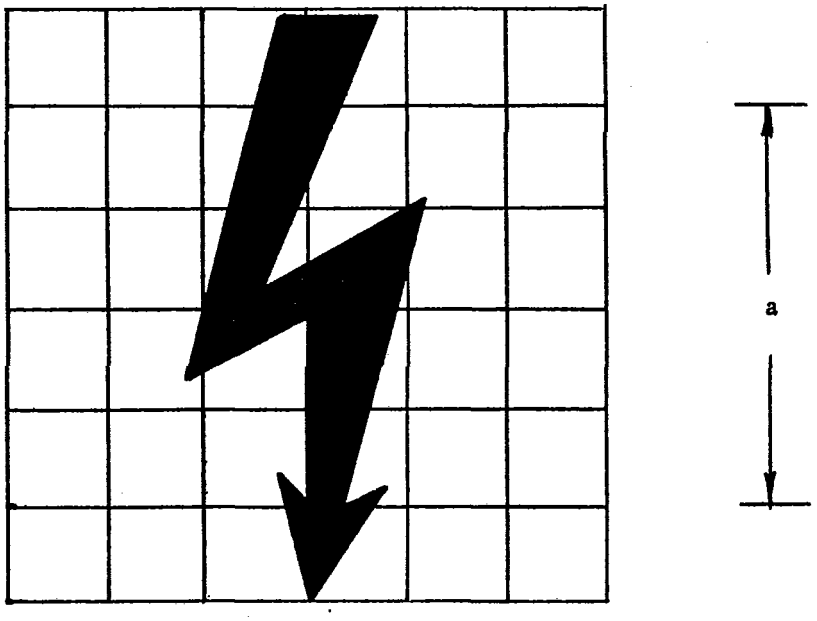

Real dimensions
Height = 1.48a
Width = 0.58a

Fig. 2-10

Copyright National Electrical Manufacturers Association
Provided by IHS under license with NEMA
No reproduction or networking permitted without license from IHS
Not for Resale

B. Inside of Enclosure

The warning instructions on the inside of the enclosure shall be in accordance with Figure 2-11. Any color may be used. The symbol for DANGER is not required. (As an alternative, warning instructions may be located on a label on the outside of the door.)

WARNING INSTRUCTIONS	
TURN OFF POWER ahead of circuit breaker before working inside. Afterwards	
Replace all parts and close cover	(a)
Replace all parts and cover	(b)
Close cover	(c)
Replace cover	(d)

Use (a), (b), (c) or (d), whichever is most appropriate.

Fig. 2-11

NEMA Standard 1-14-1975.

AB 1-2.71 MARKING OF CIRCUIT BREAKERS

1. Circuit breakers and circuit breaker frames shall be marked with the manufacturer's name or trade-mark (or with other suitable means for identifying the manufacturer), the electrical ratings, and with the type number of the device or the equivalent. The marking shall be so located that it will be visible for inspection without disassembling or removing the circuit breaker after it has been installed in the intended manner.

2. Circuit breakers meeting the calibration test at 40°C (104°F) may be marked "40°C". A circuit breaker frame and interchangeable trip unit meeting the calibration test at 40°C (104°F) may have the trip unit only marked "40°C".

3. A circuit breaker intended for use only in a ventilated enclosure shall be marked either with the type number (or the equivalent) of the enclosure with which it is to be used or with the proper size and location of the ventilating openings. This marking shall be located where it will be readily visible after installation.

4. The continuous current rating of a circuit breaker rated 100 amperes or less shall be molded, stamped, etched or similarly marked into the handle or the escutcheon area of the circuit breaker so as to be visible without removing the trim or cover of the enclosure. If the continuous current rating is marked on the handle of the circuit breaker, the numerical value alone is considered to be adequate.

5. A circuit breaker which has an additional adjustable magnetic means for tripping shall be marked to indicate at least the rating of the minimum and maximum settings. This marking shall be given in amperes or as a percentage of the ampacity. Where an interchangeable trip unit is provided, this marking may be on the trip unit.

6. A circuit breaker which is required to be or is optionally marked to show its intended use in Class CTL assemblies shall be marked "Class CTL". This marking need not be visible after installation.

7. A circuit breaker shall indicate clearly whether it is open or closed. Such markings shall be visible when the trim or cover is in place except that, when the circuit breaker is enclosed, it may be necessary to open a hinged cover or door to see the marking.

Copyright National Electrical Manufacturers Association
Provided by IHS under license with NEMA
No reproduction or networking permitted without license from IHS
Not for Resale

AB*1 75 ■ 2595512 0064636 3 ■

8. If the marking required in item 7 to indicate whether a circuit breaker is in the open or closed position is not readily visible when an electrical operator is installed, the electrical operator shall clearly indicate whether the circuit breaker is in the on or off position; it may also indicate whether the circuit breaker is in the tripped position.

9. A two-pole circuit breaker which is suitable for a corner grounded three-phase delta circuit may be marked "1Ø - 3Ø".

10. A two-pole or a three-pole circuit breaker which is suitable for use only on a three-wire direct-current or single-phase alternating-current system having a grounded neutral shall be marked with a combination voltage rating such as "125/250 volts" or "120/240 volts AC".

11. A three-pole circuit breaker which is suitable for use on a 250-volt direct-current system may be marked "250 V DC" if it is clearly indicated that the rating requires the use of at least two poles to control the circuit.

12. If the proper operation or installation of a circuit breaker is dependent upon an insulating barrier, liner, shield or similar member being mounted on the circuit breaker or elsewhere, a marking on the circuit breaker shall be provided indicating the need for the barrier and giving all pertinent information, including its size and location.

13. Where the proper operation or installation of a circuit breaker is dependent upon an insulating barrier or similar member that is part of the circuit breaker (such as a terminal cover), a marking shall be provided to indicate the need for the installation of this part. This marking need not be visible after the part has been properly installed.

14. Interchangeable trip circuit breakers shall be marked "line" and "load"; noninterchangeable trip circuit breakers which have been tested and found suitable for reversed line and load connection need not be marked.

15. A circuit breaker which is provided with an accessory shall be marked to identify the installed accessory. The marking shall include the type, proper connections (if not obvious), and the electrical rating of the accessory.

16. A circuit breaker which is provided with a shunt trip accessory and which is intended for use with ground fault sensing and relaying equipment shall include the following marking:

    a. Voltage and frequency (or DC) of the tripping circuit.

    b. Ampere rating, including inrush and sealed values, for alternating-current rated tripping circuits.

    c. "Suitable for Ground Fault Protection when combined with Class I (or manufacturer and catalog number) Ground Fault Sensing Element", or the equivalent.

17. If an accessory is shipped from the factory separately from the circuit breaker with which it is intended to be used:

    a. The accessory shall be marked with its own catalog number or the equivalent, with the name or trade mark of the manufacturer, and with its electrical ratings. See item 15.

    b. Instructions shall be furnished with the accessory indicating the specific types of circuit breakers with which the accessory may be used.

    c. A suitable marking label which can be attached to the circuit breaker to identify the field-installed accessory and its connections shall be furnished with the accessory, along with instructions for attaching the label to the circuit breaker.

    d. Installation and wiring instructions shall be furnished with the accessory unless the construction makes the installation obvious.

18. A circuit breaker with wiring terminals intended and found suitable for use with copper and aluminum conductors shall be marked "use copper or aluminum wire" or with the abbreviations "AL/CU" or "CU/AL".

Copyright National Electrical Manufacturers Association
Provided by IHS under license with NEMA
No reproduction or networking permitted without license from IHS
Not for Resale

19. A circuit breaker that has been found suitable for use on circuits having high available fault currents may be marked with the current-interrupting rating or ratings for which it has been found suitable. Each rating shall be given in amperes and volts. The marking shall be as follows:

    Current-Interrupting Rating(s)
    Max. RMS Sym. Amperes ____ Volts ____.

20. Circuit breakers which do not contain automatic tripping means shall be marked to so indicate, for example: "Nonautomatic Circuit Interrupter".

NEMA Standard 11-14-1974.

AB 1-2.72 MARKING OF CIRCUIT BREAKER ENCLOSURES

1. A circuit breaker enclosure shall be marked with the manufacturer's name or trademark (or other suitable means of identification), its type number or the equivalent, and the maximum electrical rating and type of circuit breaker(s) for which the enclosure is designed.

2. A circuit breaker enclosure which, when provided with the circuit breaker(s) for which it is marked, is found suitable for use as service equipment may be marked "Suitable For Use As Service Equipment".

3. A circuit breaker enclosure which has been found to comply with the requirements for raintight enclosures shall be marked "Raintight" or "Rainproof". This marking shall be located in a conspicuous place on the enclosure so that it will be visible after the circuit breaker(s) is installed.

4. Except as indicated in item 5, a neutral assembly which is shipped separately shall comply with the following:

    a. The neutral assembly shall be marked with (1) its own ampere rating, (2) its own catalog number or the equivalent, and (3) the manufacturer's name or trademark.

    b. The circuit breaker enclosure shall be marked with the catalog number of the neutral assembly and with the voltage ratings for which the neutral bus bar is intended to be used.

5. A neutral assembly need not be marked with its ampere rating if all of the enclosures in which it is to be used are marked with the neutral catalog number or the equivalent and the neutral ampere rating.

NEMA Standard 11-14-1974.

Copyright National Electrical Manufacturers Association
Provided by IHS under license with NEMA
No reproduction or networking permitted without license from IHS

Not for Resale

AB*1 75 ■ 2595512 0064638 7 ■

APPLICATION STANDARDS

AB 1-2.80 GENERAL APPLICATION

Circuit breakers should be applied within their assigned voltage, continuous current, frequency (if alternating current) and interrupting current ratings and should be selected to provide the protection required by the other components of the circuit.

Authorized Engineering Information 9-25-1963.

AB 1-2.81 VOLTAGE

Circuit breakers should not be applied on systems having nominal voltages higher than the rated voltage of the circuit breaker.

Authorized Engineering Information 3-19-1958.

AB 1-2.82 RATED CONTINUOUS CURRENT

The circuit breaker should have a continuous current rating not less than the maximum load current which it will be required to carry continuously. Rated continuous currents are based on operation in a 40°C ambient temperature. Operation at other temperatures may affect the current-carrying ability of some molded case circuit breakers. Information regarding performance at other ambient temperatures should be obtained from the manufacturer.

Transitory overcurrents, such as those encountered in motor starting, may exceed the rated continuous current of the breakers selected.

Authorized Engineering Information 9-4-1969.

AB 1-2.83 FREQUENCY

Alternating-current circuit breakers are intended for use on 60-hertz systems. For application at other frequencies, the manufacturer should be consulted.

Authorized Engineering Information 3-19-1958.

AB 1-2.84 RATED INTERRUPTING CURRENT — ALTERNATING-CURRENT SYSTEMS

Circuit breakers should have a symmetrical interrupting current rating not less than the calculated total available symmetrical current at the point of application.

For three-phase alternating-current circuits, the calculated total available current is computed by determining the total symmetrical current from all sources, including synchronous and induction motors, as follows:

Determination of symmetrical current by calculation—the symmetrical current consists of the sum of the system and motor contributions, calculated in the following manner:

1. System contribution is determined for all sources and all impedances up to the source side of the circuit breaker but not including any of the circuit breaker impedance. At 600 volts and below, even small impedances should be taken into account as they may greatly affect the result.

2. Induction and synchronous motors which are connected to the bus act as generators and, at one-half cycle after the short circuit occurs, contribute current which may be calculated from the subtransient reactance of the motors. Where the reactances of the motors are not known, it is assumed that induction motors contribute 3.6 times their full-load current and that synchronous motors contribute 4.8 times their full-load current. When the motor load of the installation is not known, assumptions may be based on system voltages.

For system voltages of 120 and 120/208 volts, it is usual to assume that the connected load consists of 50 percent lighting and 50 percent motor load. This corresponds to an equivalent symmetrical contribution of twice the full connected load. For system voltages of 240 to 600 volts, it is usual to assume that the connected load consists of 100 percent motor load and, in the absence of exact information, that 25 percent of the motors are synchronous motors and 75 percent are induction motors. This corresponds to an equivalent symmetrical contribution of four times the full connected load.

Authorized Engineering Information 9-4-1969.

AB 1-2.85 RATED INTERRUPTING CURRENT — DIRECT-CURRENT SYSTEMS

The circuit breaker shall have a rated interrupting current not less than the maximum available current at the point of application. For application on inductive circuits, consult the manufacturer.

Authorized Engineering Information 9-4-1969.

Copyright National Electrical Manufacturers Association
Provided by IHS under license with NEMA
No reproduction or networking permitted without license from IHS
Not for Resale

AB 1-2.86 SERVICE CONDITIONS

Consideration should be given to the service conditions in which circuit breakers are applied as set forth in AB 1-2.04.

Authorized Engineering Information 3-19-1958.

AB 1-2.87 OVERCURRENT PROTECTION FOR CONDUCTORS

If the rated continuous current of circuit breakers rated 800 amperes or less does not correspond to the current-carrying capacity of the conductor, the circuit breaker with the next higher rating may be used. Circuit breakers should be tested and wired in accordance with Table 2-9, Pages 24 and 25.

Caution— The use of conductors smaller than those shown in Table 2-9 can result in unsafe conditions such as overheating and a change in tripping characteristics; consult the manufacturer.

The provisions of the "National Electrical Code" should be observed.

Authorized Engineering Information 11-14-1974.

AB 1-2.88 PROTECTION FOR MOTORS, MOTOR STARTERS AND MOTOR BRANCH CIRCUITS

The circuit breaker which is selected shall have a rated continuous current of at least 115 percent of the full-load current of the motor and shall have a calibration setting sufficiently high to permit the motor or motors to start under normal operating conditions.

For alternating-current motors, an instantaneous magnetic trip setting of eleven times the full-load current of the motor is usually adequate.

Circuit breakers with adjustable magnetic trip elements provide maximum short-circuit protection when they are adjusted to trip at current values immediately above the motor inrush values.

Authorized Engineering Information 9-25-1963.

AB 1-2.89 VARIATIONS IN TRIPPING CHARACTERISTICS OF CIRCUIT BREAKERS ●

Under certain conditions, steel mounting plates, adjacent conductors, rear connections, etc., may influence a circuit breaker's magnetic tripping characteristics. Such variations can occur and can be compensated for by adjustment. For example, motor protection settings should be established near the mid-band of the breaker's instantaneous tripping current range to permit the selection of a higher value of current pick-up if tripping should occur during motor starting.

Authorized Engineering Information 5-17-1976.

Added 5-17-1976.

Copyright National Electrical Manufacturers Association
Provided by IHS under license with NEMA
No reproduction or networking permitted without license from IHS
Not for Resale

Pub. No. AB 1
Part 3 Page 1
January 1978

Part 3
CIRCUIT BREAKERS WITH INVERSE TIME AUTOMATIC TRIPPING

Molded case circuit breakers with inverse time automatic tripping are intended primarily for the overcurrent and short-circuit protection of wire.

GENERAL

AB 1-3.01 APPLICABLE STANDARDS IN PART 2

See AB 1-2.01 through AB 1-2.04.

RATING STANDARDS

AB 1-3.02 APPLICABLE STANDARDS IN PART 2

See AB 1-2.10 through AB 1-2.16.

AB 1-3.03 AMPERE RATINGS, RATED CONTINUOUS CURRENTS AND TYPICAL TIME CURRENT CURVE

A. Ampere Ratings and Rated Continuous Currents

The ampere ratings and rated continuous currents shall be in accordance with Table 3-1, page 2. For additional ratings within a frame size, consult the manufacturer.

NEMA Standard 11-14-1974.

B. Typical Time Current Curve

A typical molded case circuit breaker time current curve is presented as Fig. 3-1, page 2A. This figure is used as a general guide.

Authorized Engineering Information 11-3-1977.

AB 1-3.04 CALIBRATION SETTING

A. With Fixed Time-delay Tripping

At an ambient temperature of 25°C, the circuit breaker shall trip automatically within the maximum time and when carrying the current specified in Table 3-2.

B. With Instantaneous Tripping

In addition to the foregoing, a circuit breaker with adjustable magnetic trips shall open automatically on overcurrents of rated frequency of ± 10 percent of the high setting and ± 25 percent of the low setting of the rms values of the instantaneous tripping current.

NEMA Standard 11-14-1974.

Table 3-2 (See AB 1-3.04)

Rated Continuous Current, Amperes	Maximum Tripping Time, Minutes: 200 Percent of Ampere Rating*	Maximum Tripping Time, Minutes: 135 Percent of Ampere Rating†
0-30	2	60
31-50	4	60
51-100	6	120
101-225	8	120
226-400	10	120
401-600	12	120
601-800	14	120
801-1000	16	120
1001-1200	18	120
1201-1600	20	120
1601-2000	22	120
Over 2000	24	120

*Based on each pole tested separately.

† For multipole circuit breakers, each pole shall carry 135 percent of rated current simultaneously.

AB 1-3.05 AMBIENT COMPENSATING BREAKERS

Circuit breakers which meet the requirements of AB 1-2.33, par. A, and of AB 1-3.04 within a range of ambient temperatures as well as at 40°C may be referred to an "Ambient Compensating" within that range of temperatures.

NEMA Standard 11-14-1974.

Copyright National Electrical Manufacturers Association
Provided by IHS under license with NEMA
No reproduction or networking permitted without license from IHS
Not for Resale

AB*1 75 ■ 2595512 0064641 7 ■

Table 3-1
Rated Continuous Currents, Amperes (See AB 1-3.03)

Frame Size, Amperes															
50	100	125	150	200	225	400	600	800	1000	1200	1600	2000	2500	3000	4000
15	15	15	15	125	70	200	300	300	600	700	600	600	1600	2000	2000
20	20	20	20	150	80	225	350	350	700	800	700	700	2000	2500	2500
25	25	25	25	175	90	250	400	400	800	1000	800	800	2500	3000	3000
30	30	30	30	200	100	300	450	450	1000	1200	1000	1000	....	....	4000
35	35	35	35	...	110	350	500	500	....	....	1200	1200	....	....	....
40	40	40	40	...	125	400	600	600	....	....	1600	1600	....	....	....
45	45	45	45	...	150	...	...	700	....	....	....	2000	....	....	....
50	50	50	50	...	175	...	...	800	....	....	....	....	....	....	....
..	60	60	60	...	200	...	...	...	....	....	....	....	....	....	....
..	70	70	70	...	225	...	...	...	....	....	....	....	....	....	....
..	80	80	80	...	...	...	...	...	....	....	....	....	....	....	....
..	90	90	90	...	...	...	...	...	....	....	....	....	....	....	....
..	100	100	100	...	...	...	...	...	....	....	....	....	....	....	....
..	...	110	110	...	...	...	...	...	....	....	....	....	....	....	....
..	...	125	125	...	...	...	...	...	....	....	....	....	....	....	....
..	...	...	150	...	...	...	...	...	....	....	....	....	....	....	....

Copyright National Electrical Manufacturers Association
Provided by IHS under license with NEMA
No reproduction or networking permitted without license from IHS
Not for Resale

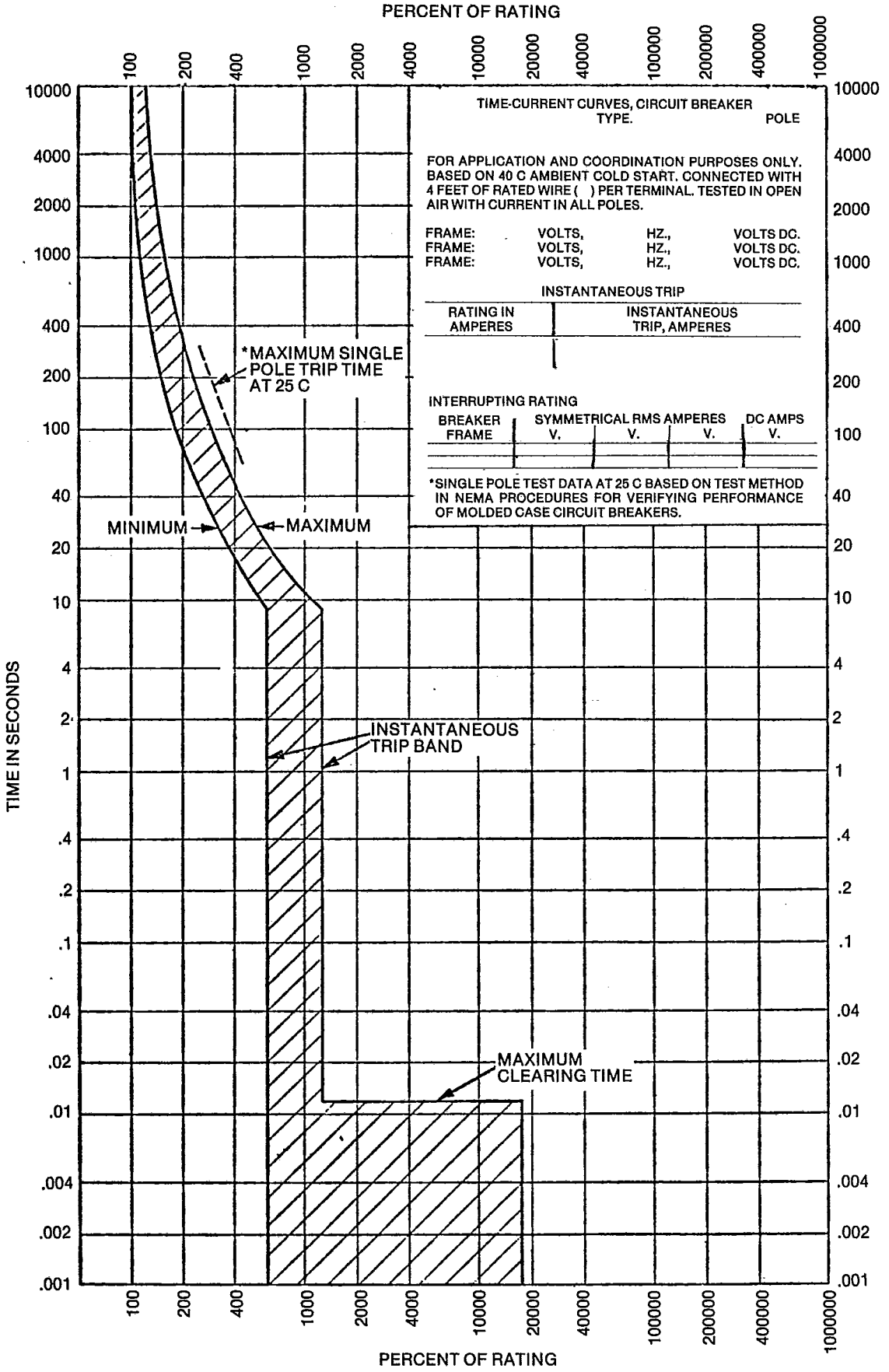

Fig. 3-1
TYPICAL TIME-CURRENT CURVE FOR MOLDED CASE CIRCUIT BREAKER

Copyright National Electrical Manufacturers Association
Provided by IHS under license with NEMA
No reproduction or networking permitted without license from IHS
Not for Resale

AB*1 75 ■ 2595512 0064643 0 ■

TEST AND PERFORMANCE STANDARDS

AB 1-3.06 APPLICABLE STANDARDS IN PART 2

See AB 1-2.30, AB 1-2.31 and AB 1-2.37.

AB 1-3.07 CALIBRATION TEST

The test procedure to determine that a circuit breaker will perform within specified limits shall be as follows:

A. Starting at 25°C, each pole of the circuit breaker shall be tested separately to determine that it will automatically trip the circuit breaker within the time specified in AB 1-3.04 when carrying a current equal to 200 percent of its rated continuous current. In addition, if the circuit breakers are "ambient compensating," the poles shall trip the breaker within the time specified in AB 1-3.04 when similar tests are made at other specified ambient temperatures.

B. Starting at 25°C, the circuit breaker shall be tested with all of its poles simultaneously carrying a current equal to 135 percent of its rated continuous current and shall automatically trip within the time specified in AB 1-3.04.

NEMA Standard 11-14-1974.

AB 1-3.08 OVERLOAD PERFORMANCE TEST

The test procedure to determine that a circuit breaker is capable of performing successfully when operated under overload conditions shall be as follows:

A. The circuit breaker shall be operated for the total number of close-open cycles shown in Table 3-3 at the rate shown in Table 2-3 (Part 2, Page 10) and shall make and break 600 percent of its rated continuous current at rated voltage, but not less than 150 amperes in any case.

B. A circuit breaker intended for use on an alternating-current system shall be tested with alternating current at rated frequency with a power factor of 0.45 to 0.50.

C. A circuit breaker rated 10,000 amperes or less and intended for use on a direct-current system shall be tested on a direct-current circuit having a time constant not less than 0.003 second.

D. The circuit breaker shall be considered as having satisfactorily passed its overload performance test if no electrical or mechanical failure occurs.

NEMA Standard 11-14-1974.

Table 3-3 (See AB 1-3.08)

Rated Continuous Current, Amperes	Total Number of Close-open Cycles	Number of Operations	
		Manually	Automatically
15 to 800	50	35	15†
801 to 1600	50	50	..
1601 to 2500	25	25*	..
2501 to 4000	28	28‡	..

*Operations may be conducted in groups of five with a maximum of 15 minutes between each group.

† For breakers rated more than 100 amperes, fifty cycles of operation may be made manually.

‡ Three operations shall be made at 600 percent of rated continuous current at the rate of one cycle per minute; twenty-five operations shall be made at 200 percent of rated continuous current at the rate of one cycle per minute (may be conducted in groups of five with a maximum of 15 minutes between each group.)

MANUFACTURING STANDARDS

AB 1-3.09 APPLICABLE STANDARDS IN PART 2

See AB 1-2.50 through AB 1-2.57.

Copyright National Electrical Manufacturers Association
Provided by IHS under license with NEMA
No reproduction or networking permitted without license from IHS
Not for Resale

AB*1 75 ■ 2595512 0064644 2 ■

MARKING AND WARNING LABELS

AB 1-3.10 APPLICABLE STANDARDS IN PART 2

See AB 1-2.70 through AB 1-2.72.

APPLICATION STANDARDS

AB 1-3.11 APPLICABLE STANDARDS IN PART 2 ▲

See AB 1-2.80 through AB 1-2.86 and AB 1-2.89.

Copyright National Electrical Manufacturers Association
Provided by IHS under license with NEMA
No reproduction or networking permitted without license from IHS
Not for Resale

Part 4
CIRCUIT BREAKERS WITH INSTANTANEOUS AUTOMATIC TRIPPING ONLY

Molded case circuit breakers with instantaneous automatic tripping only are intended primarily for the short-circuit protection of circuit wiring and connected apparatus.

GENERAL

AB 1-4.01 APPLICABLE STANDARDS IN PART 2

See AB 1-2.01 through AB 1-2.04.

RATING STANDARDS

AB 1-4.02 APPLICABLE STANDARDS IN PART 2

See AB 1-2.10 through AB 1-2.16.

AB 1-4.03 RATED CONTINUOUS CURRENT

No standards have been established. The manufacturer should be consulted.

Authorized Engineering Information 9-25-1963.

AB 1-4.04 CALIBRATION SETTING

The circuit breaker shall open automatically on overcurrents of rated frequency as follows:

1. Nonadjustable Trips—within ± 20 percent of the setting of the rms value* of instantaneous tripping currents.

2. Adjustable Trips—within ± 20 percent of the high and low settings of the rms value of instantaneous tripping current.

NEMA Standard 3-17-1971.

TEST AND PERFORMANCE STANDARDS

AB 1-4.05 APPLICABLE STANDARDS IN PART 2

See AB 1-2.30, AB 1-2.31 and AB 1-2.37.

AB 1-4.06 CALIBRATION TEST

The test procedure to determine that a circuit breaker will perform within specified limits shall consist of overloading each pole of the breaker separately with slowly rising current synchronous closing or with a current pulse having no more than 5 percent direct-current component to determine that the breaker will automatically trip the circuit breaker within the current range or ranges specified in AB 1-4.04. A circuit breaker intended for use on an alternating-current system shall be tested with alternating current at rated frequency. A circuit breaker intended for use on a direct-current system shall be tested with direct current.

NEMA Standard 9-4-1969.

AB 1-4.07 OVERLOAD PERFORMANCE TEST

The test procedure to determine that a circuit breaker is capable of performing successfully when operated under overload conditions shall be as follows:

A. The circuit breaker shall be operated manually for the total number of close-open cycles shown in Column 2 of Table 3-3 in AB 1-3.08 at the rate indicated in Table 2-3 of AB 1-2.34 and shall make and break 600 percent of its rated continuous current at rated voltage, but not less than 150 amperes in any case. For breakers rated 801 amperes and above, operations may be conducted in groups of five with a maximum of 15 minutes between each group.

B. A circuit breaker intended for use on an alternating-current system shall be tested with alternating current at rated frequency with a power factor of 0.45 to 0.50.

C. A circuit breaker having an interrupting current rating of 10 000 amperes or less and intended for use on a direct-current system shall be tested on a direct-current circuit having a time constant not less than 0.003 second.

D. The circuit breaker shall be considered as having satisfactorily passed its overload performance test if no electrical or mechanical failure occurs.

NEMA Standard 11-14-1974.

Copyright National Electrical Manufacturers Association
Provided by IHS under license with NEMA
No reproduction or networking permitted without license from IHS
Not for Resale

MANUFACTURING STANDARDS

AB 1-4.08 APPLICABLE STANDARDS IN PART 2

See AB 1-2.50 through AB 1-2.57.

MARKING AND WARNING LABELS

AB 1-4.09 APPLICABLE STANDARDS IN PART 2

See AB 1-2.70 through AB 1-2.72.

APPLICATION STANDARDS

AB 1-4.10 APPLICABLE STANDARDS IN PART 2 ▲

See AB 1-2.80 through AB 1-2.86, AB 1-2.88 and AB 1-2.89.

Copyright National Electrical Manufacturers Association
Provided by IHS under license with NEMA
No reproduction or networking permitted without license from IHS
Not for Resale

AB*1 75 ■ 2595512 0064647 8 ■

Part 5
NONAUTOMATIC CIRCUIT BREAKERS

Nonautomatic molded case circuit breakers are intended primarily for use as a disconnecting device.

GENERAL

AB 1-5.01 APPLICABLE STANDARDS IN PART 2

See AB 1-2.01 through AB 1-2.04.

RATING STANDARDS

AB 1-5.02 APPLICABLE STANDARDS IN PART 2

See AB 1-2.10 through AB 1-2.15.

AB 1-5.03 RATED CONTINUOUS CURRENT

The rated continuous current for each frame size shall be the maximum rating which is available in the frame size.

NEMA Standard 9-25-1963.

TEST AND PERFORMANCE STANDARDS

AB 1-5.04 APPLICABLE STANDARDS IN PART 2

See AB 1-2.30, AB 1-2.31 and AB 1-2.37.

AB 1-5.05 OVERLOAD PERFORMANCE TEST

The test procedure to determine that a circuit breaker is capable of performing successfully when operated under overload conditions shall be as follows:

A. The circuit breaker shall be operated manually for the total number of close-open cycles shown in Column 2 of Table 3-3 in AB 1-3.08 at the rate indicated in Table 2-3 of AB 1-2.34 and shall make and break 600 percent of its rated continuous current at rated voltage, but not less than 150 amperes in any case. For breakers rated 801 amperes and above, operations may be conducted in groups of five with a maximum of 15 minutes between each group.

B. A circuit breaker intended for use on an alternating-current system shall be tested with alternating current at rated frequency with a power factor of 0.45 to 0.50.

C. The circuit breaker shall be considered as having satisfactorily passed its overload performance test if no electrical or mechanical failure occurs.

NEMA Standard 11-14-1974.

MANUFACTURING STANDARDS

AB 1-5.06 APPLICABLE STANDARDS IN PART 2

See AB 1-2.51 through AB 1-2.53 and AB 1-2.55 through AB 1-2.57.

MARKING AND WARNING LABELS

AB 1-5.07 APPLICABLE STANDARDS IN PART 2

See AB 1-2.70 through AB 1-2.72.

APPLICATION STANDARDS

AB 1-5.08 APPLICABLE STANDARDS IN PART 2

See AB 1-2.80 through AB 1-2.83, and AB 1-2.86.

AB 1-5.09 APPLICATION AS A MOTOR DISCONNECTING MEANS

The circuit breaker shall have a rated continuous current of at least 115 percent of the total full-load current of the connected motor or motors. Each motor shall be provided with an individual circuit breaker with the exception listed in par. 430-112 of the "National Electrical Code."

NEMA Standard 9-25-1963.

Copyright National Electrical Manufacturers Association
Provided by IHS under license with NEMA
No reproduction or networking permitted without license from IHS
Not for Resale

Part 6
INTEGRALLY FUSED CIRCUIT BREAKERS * WITH INVERSE TIME AUTOMATIC TRIPPING

Integrally fused molded case circuit breakers with inverse time automatic tripping have interrupting capacities much greater than those of unfused circuit breakers of corresponding frame sizes and are intended primarily for the overcurrent and short-circuit protection of high-capacity electrical circuits.

*Unfused breakers may be used above their interrupting rating when properly coordinated with current-limiting fuses. The manufacturer should be consulted for recommendation. (Approved as Authorized Engineering Information 9-25-1963.)

GENERAL

AB 1-6.01 APPLICABLE STANDARDS IN PART 2

See AB 1-2.01 through AB 1-2.04

RATING STANDARDS

AB 1-6.02 APPLICABLE STANDARDS IN PART 2

See AB 1-2.10 through AB 1-2.16.

AB 1-6.03 AMPERE RATINGS AND RATED CONTINUOUS CURRENTS

The ampere ratings and rated continuous currents shall be in accordance with Table 6-1.

Table 6-1
Rated Continuous Currents, Amperes

Frame Size, Amperes						
100	225	400	600	800	1600	2000
15	70	200	300	300	600	600
20	80	225	350	350	700	700
25	90	250	400	400	800	800
30	100	300	500	500	1000	1000
35	110	350	600	600	1200	1200
40	125	400	...	700	1600	1600
45	150	...	...	800	....	2000
50	175	...	...	...	....	....
60	200	...	...	...	....	....
70	225	...	...	...	....	....
80	...	...	...	...	....	....
90	...	...	...	...	....	....
100	...	...	...	...	....	....

NEMA Standard 9-4-1969.

AB 1-6.04 CALIBRATION SETTING

See AB 1-3.04.

TEST AND PERFORMANCE STANDARDS

AB 1-6.05 APPLICABLE STANDARDS IN PART 2

See AB 1-2.30, AB 1-2.31 and AB 1-2.37.

AB 1-6.06 OPERATING DUTY (DUTY CYCLE)

The operating duty (duty cycle) of integrally fused circuit breakers shall consist of an O unit operation followed by a CO unit operation. The CO operation shall be made as soon after the O unit operation as new fuses can be installed.

NEMA Standard 9-25-1963.

MANUFACTURING STANDARDS

AB 1-6.07 APPLICABLE STANDARDS IN PART 2

See AB 1-2.50 through AB 1-2.57.

MARKING AND WARNING LABELS

AB 1-6.08 APPLICABLE STANDARDS IN PART 2

See AB 1-2.70 through AB 1-2.72.

APPLICATION STANDARDS

AB 1-6.09 APPLICABLE STANDARDS IN PART 2 ▲

See AB 1-2.80 through AB 1-2.87 and AB 1-2.89.

Copyright National Electrical Manufacturers Association
Provided by IHS under license with NEMA
No reproduction or networking permitted without license from IHS
Not for Resale

AB*1 75 ■ 2595512 0064649 1 ■

Part 7
INTEGRALLY FUSED CIRCUIT BREAKERS WITH INSTANTANEOUS AUTOMATIC TRIPPING ONLY

Integrally fused molded case circuit breakers with instantaneous automatic tripping only have interrupting capacities much greater than those of unfused circuit breakers of corresponding frame sizes and are intended primarily for the short-circuit protection of high-capacity electrical circuits.

GENERAL

AB 1-7.01 APPLICABLE STANDARDS IN PART 2

See AB 1-2.01 through AB 1-2.04.

RATING STANDARDS

AB 1-7.02 APPLICABLE STANDARDS IN PART 2

See AB 1-2.10 through AB 1-2.16.

AB 1-7.03 RATED CONTINUOUS CURRENT

No standards have been established. The manufacturer should be consulted.

Authorized Engineering Information 9-25-1963.

AB 1-7.04 CALIBRATION SETTING

See AB 1-4.04.

TEST AND PERFORMANCE STANDARDS

AB 1-7.05 APPLICABLE STANDARDS IN PART 2

See AB 1-2.30, AB 1-2.31 and AB 1-2.37.

AB 1-7.06 OPERATING DUTY (DUTY CYCLE)

The operating duty (duty cycle) of integrally fused circuit breakers shall consist of an O unit operation followed by a CO unit operation. The CO operation shall be made as soon after the O unit operation as new fuses can be installed.

NEMA Standard 9-25-1963.

MANUFACTURING STANDARDS

AB 1-7.07 APPLICABLE STANDARDS IN PART 2

See AB 1-2.50 through AB 1-2.57.

MARKING AND WARNING LABELS

AB 1-7.08 APPLICABLE STANDARDS IN PART 2

See AB 1-2.70 through AB 1-2.72.

APPLICATION STANDARDS

AB 1-7.09 APPLICABLE STANDARDS IN PART 2 ▲

See AB 1-2.80 through AB 1-2.87 and AB 1-2.89.

▲ Revised 5-17-1976.

Copyright National Electrical Manufacturers Association
Provided by IHS under license with NEMA
No reproduction or networking permitted without license from IHS
Not for Resale

Part 7A●
ADJUSTABLE-TRIP CIRCUIT BREAKERS

Molded case circuit breakers with adjustable means enable the user to change the long-delay pick-up currents, long-time short-delay pick-up currents, short-time instantaneous pick-up currents, or any combination of these. The following requirements also apply to changeable-ampere-rating-type circuit breakers.

GENERAL

AB 1-7A.01 APPLICABLE STANDARDS IN PART 2

See AB 1-2.01 through AB 1-2.04.

RATING STANDARDS

AB 1-7A.02 APPLICABLE STANDARDS IN PART 2

See AB 1-2.10 through AB 1-2.16.

TEST AND PERFORMANCE STANDARDS

AB 1-7A.03 APPLICABLE STANDARDS IN PART 2

See AB 1-2.30 through AB 1-2.36.

MANUFACTURING STANDARDS

AB 1-7A.04 APPLICABLE STANDARDS IN PART 2

See AB 1-2.50 through AB 1-2.57.

AB 1-7A.05 CURRENT TRIP ADJUSTMENT TYPE BREAKERS

A. Trip Mechanism Adjustable for Time

A circuit breaker having a trip mechanism which is adjustable with respect to the length of time (short time or long time) required for automatic operation shall comply with the following requirements:

1. The circuit breaker frame size shall be 200 amperes or larger and shall be marked with a single ampere rating. The ampere rating shall be not less than 100 amperes.

2. Any adjustment of the time required for automatic operation of the circuit breaker shall not cause the tripping time to exceed the time permitted for the ampere rating of the circuit breaker as indicated in AB 1-3.07 and shall not adversely affect the ability of the circuit breaker to carry 100 percent of its marked ampere rating under the usual service conditions specified in AB 1-2.04.

3. Adjustments shall not cause a hazard to personnel.

B. Trip Mechanism Adjustable for Current

A circuit breaker having a trip mechanism which is adjustable with respect to a continuous-current-carrying setting or to a pick-up point (the point at which the tripping action is initiated) shall comply with the following requirements:

1. The circuit breaker shall be clearly marked to indicate whether the trip adjustment is for a continuous-current-carrying setting or a pick-up point.

2. A trip adjustment which is marked as a continuous-current-carrying setting shall not be adjustable to more than 100 percent of the ampere rating marked on the circuit breaker. The current adjustment settings shall be individually and distinctly marked.

3. A trip adjustment which is marked as a pick-up point shall not be adjustable to more than 120 percent of the ampere rating marked on the circuit breaker. The pick-up points shall be individually and distinctly marked.

4. The circuit breaker shall be capable of carrying 100 percent of its marked ampere rating continuously with the trip adjustment set at its maximum setting.

NEMA Standard 11-11-1976.

● Part 7A added 11-11-1976.

Copyright National Electrical Manufacturers Association
Provided by IHS under license with NEMA
No reproduction or networking permitted without license from IHS
Not for Resale

AB 1-7A.06 CHANGEABLE-AMPERE-RATING-TYPE CIRCUIT BREAKERS

A circuit breaker having a trip mechanism which is adjustable with respect to changing its ampere rating in the field shall comply with the following requirements:

1. The circuit breaker frame size shall be 200 amperes or larger. The ampere rating shall not be changeable to less than 100 amperes nor more than 100 percent of the frame size rating.

2. The circuit breaker shall comply with the requirements in AB 1-3.07 at the maximum ampere setting and at each ampere rating at which it may be changed.

3. The circuit breaker shall have a marking to indicate the ampere rating to which it has been adjusted. The marking shall be distinct and readily visible after the change in rating is accomplished.

NEMA Standard 11-11-1976.

MARKING AND WARNING LABELS

AB 1-7A.07 APPLICABLE STANDARDS IN PART 2

See AB 1-2.70 through AB 1-2.72.

APPLICATION STANDARDS

AB 1-7A.08 APPLICABLE STANDARDS IN PART 2

See AB 1-2.80 through AB 1-2.89.

Copyright National Electrical Manufacturers Association
Provided by IHS under license with NEMA
No reproduction or networking permitted without license from IHS
Not for Resale

AB*1 75 ■ 2595512 0064652 1 ■

Part 8
ACCESSORIES

AB 1-8.01 SHUNT TRIP DEVICE

A. General

A shunt trip device shall have a normally open auxiliary switch ("a" type) connected in series with its coil except that, where the operating voltage for the coil is taken from the load side of the circuit breaker or when the shunt trip coil is rated for continuous duty, the auxiliary switch may be omitted.

B. Rated Voltage

The rated voltages for shunt trip devices shall be:

Direct current —24, 48, 125 and 250 volts.

Alternating current—120, 240 and 480 volts.

C. Minimum Tripping Voltage

The minimum tripping voltage of shunt trip devices shall be 75 percent of the rated voltage of the trip coil for both direct- and alternating-current applications. When a shunt-trip device is intended for use in conjunction with ground-fault protection equipment, the minimum tripping voltage shall be 55 percent of its rated voltage.

D. Endurance Test

The shunt-trip device, when applied in accordance with par. H, shall be capable of tripping the circuit breaker for at least 10 percent of the number of operations specified in Table 2-3 (Part 2 Page 10) under the column "With Current". During this test, the shunt-trip voltage shall be removed while the circuit breaker is reset and closed.

E. Rated Interrupting Current Test

With the shunt trip device installed, the circuit breaker shall be subjected to a three-phase test (see Fig. 2-8, Part 2 Page 16), on either the "O" or "CO" cycle, at the specified interrupting current rating for the maximum voltage rating. The shunt trip device shall then be capable of withstanding the dielectric withstand test described in par. F, except that the test voltage shall be two times the voltage of the test circuit and shall be gradually increased from zero to the prescribed voltage.

F. Dielectric Withstand Test

With the shunt trip device installed, the circuit breaker shall comply with the dielectric withstand test requirements given in AB 1-2.36. In addition, the test voltage shall be applied between:

1. The shunt-trip-device coil winding and live parts of the breaker.

2. The associated wiring and all live parts of the breaker.

3. The coil winding and frame of the shunt trip device (the test voltage shall be 1000 volts plus twice the rated voltage of the coil).

G. Spacings

Following installation of the shunt trip devices, the circuit breaker spacings shall be not less than those given in Table 2-11 (Part 2 Page 26).

H. Application

Shunt trip devices shall be applied within their assigned ratings. For applications in excess of the assigned ratings, consult the manufacturer.

NEMA Standard 11-14-1974.

AB 1-8.02 UNDERVOLTAGE TRIP DEVICE

A. General

An undervoltage trip device normally has its coil connected to the line side of the circuit breaker without an auxiliary switch. The armature shall be capable of being released for tripping at any point in the closing stroke of the circuit breaker.

B. Rated Voltage

The rated voltages for undervoltage trip devices shall be:

Direct current — 48, 125 and 250 volts.
Alternating current —120, 240 and 480 volts.

C. Tripping Voltage Range

The tripping voltage range of undervoltage trip devices shall be 70 to 35 percent of the voltage rating of the trip coil for both direct- and alternating-current applications.

D. Pick-up Voltage

An electrically-reset undervoltage trip device shall pick up and a mechanically-reset undervoltage trip device shall seal in at 85 percent of rated voltage. They may also pick up and seal in at a lower voltage.

Copyright National Electrical Manufacturers Association
Provided by IHS under license with NEMA
No reproduction or networking permitted without license from IHS
Not for Resale

E. Endurance Test

The undervoltage trip device, when applied in accordance with par. J, shall be capable of tripping the circuit breaker for at least 10 percent of the number of operations specified in Table 2-3 (Part 2 Page 10) under the column "With Current".

F. Rated Interrupting Current Test

With the undervoltage trip device installed, the breaker shall be subjected to a three-phase test (see Fig. 2-8, Part 2 Page 16), on either the "O" or "CO" cycle, at the specified interrupting current rating for the maximum voltage rating. The undervoltage trip device shall then be capable of withstanding the dielectric withstand test described in par. G, except that the test voltage shall be two times the voltage of the test circuit and shall be gradually increased from zero to the prescribed voltage.

G. Dielectric Withstand Test

With the undervoltage trip device installed, the circuit breaker shall comply with the dielectric withstand test requirements given in AB 1-2.36. In addition, the test voltage shall be applied between:

1. The undervoltage-trip-device coil winding and live parts of the breaker.

2. The associated wiring and all live parts of the breaker.

3. The coil winding and frame of the undervoltage trip device (the test voltage shall be 1000 volts plus twice the rated voltage of the coil).

H. Spacings

Following installation of the undervoltage trip device, the circuit breaker spacings shall be not less than those given in Table 2-11 (Part 2 Page 26).

I. Application

Undervoltage trip devices shall be applied within their assigned ratings. For applications in excess of the assigned ratings, consult the manufacturer.

NEMA Standard 11-14-1974.

AB 1-8.03 AUXILIARY SWITCHES

A. Ratings

The rated current for auxiliary switches shall be that recommended by the manufacturer for the particular voltage rating.

The rated voltages for auxiliary switches shall be:

Direct current — 48, 125 and 250 volts.
Alternating current — 120, 240 and 480 volts.

B. Endurance Test

The auxiliary switch shall be capable of being operated for at least the same total number of times and rate of operation consistent with the endurance requirements for the frame size of the breaker in which it is to be used. See Table 2-3 (Part 2 Page 10).

C. Rated Interrupting Current Test

With the auxiliary switch installed, the breaker shall be subjected to a three-phase test (see Fig. 2-8, Part 2 Page 16), on either the "O" or "CO" cycle, at the specified interrupting current rating for the maximum voltage rating. The auxiliary switch shall then be capable of withstanding the dielectric withstand test described in par. D, except that the test voltage shall be two times the voltage of the test circuit and shall be gradually increased from zero to the prescribed voltage.

D. Dielectric Withstand Test

With the auxiliary switch installed, the circuit breaker shall comply with the dielectric withstand test requirements given in AB 1-2.36. In addition, the test voltage shall be applied between:

1. The associated wiring and all live parts of the breaker.

2. The terminals and frame of the auxiliary switch (the test voltage shall be 1000 volts plus twice the rated voltage of the switch).

E. Spacings

Following installation of the auxiliary switch, the circuit breaker spacings shall be not less than those given in Table 2-11 (Part 2 Page 26).

F. Application

Auxiliary switches shall be applied within their assigned ratings. For applications in excess of the assigned ratings, consult the manufacturer.

NEMA Standard 11-14-1974.

Copyright National Electrical Manufacturers Association
Provided by IHS under license with NEMA
No reproduction or networking permitted without license from IHS

Not for Resale

AB*1 75 ■ 2595512 0064654 5 ■

AB 1-8.04 ALARM SWITCH

A. Ratings

The rated current for alarm switches shall be that recommended by the manufacturer for the particular voltage rating.

The rated voltages for alarm switches shall be:

Direct current — 48, 125 and 250 volts.
Alternating current —120, 240 and 480 volts.

B. Endurance Test

The alarm switch, when applied in accordance with par. F, shall be capable of operating for at least 10 percent of the number of operations specified in Table 2-3 (Part 2 Page 10) under the column "With Current". The endurance test shall be made at the rated current and voltage of the switch.

C. Rated Interrupting Current Test

With the alarm switch installed, the circuit breaker shall be subjected to a three-phase test (see Fig. 2-8, Part 2 Page 16), on either the "O" or "CO" cycle, at the specified interrupting current rating for the maximum voltage rating. The alarm switch shall then be capable of withstanding the dielectric withstand test described in par. D, except that the test voltage shall be two times the voltage of the test circuit and shall be gradually increased from zero to the prescribed voltage.

D. Dielectric Withstand Test

With the alarm switch installed, the circuit breaker shall comply with the dielectric withstand test requirements given in AB 1-2.36. In addition, the test voltage shall be applied between:

1. The associated wiring and all live parts of the breaker.
2. The terminals and frame of the alarm switch (the test voltage shall be 1000 volts plus twice the rated voltage of the switch).

E. Spacings

Following installation of the alarm switch, the circuit breaker spacings shall be not less than those given in Table 2-11 (Part 2 Page 26).

F. Application

Alarm switches shall be applied within their assigned ratings. For applications in excess of the assigned ratings, consult the manufacturer.

NEMA Standard 11-14-1974.

AB 1-8.05 ELECTRICAL OPERATOR

A. Rated Voltage

The rated voltages for electrical operators shall be:

Direct current — 48, 125 and 250 volts.
Alternating current — 120, 240 and 480 volts.

B. Endurance Test

An electrical operator which is intended to be used with a circuit breaker of a specific frame size shall be tested with that circuit breaker and shall operate for at least the number of operations specified in Table 2-3 (Part 2 Page 10) under the column "Without Current".

An electrical operator which is intended to be used with circuit breakers of different frame sizes shall be tested with the circuit breaker having the largest frame size and, also, the circuit breaker having the smallest frame size for which it is intended. The operator shall operate for at least the total number of operations specified for each frame size in Table 2-3 (Part 2 Page 10) except that, if the same operate used for both tests, the number of operations requi for the smallest frame size may be reduced by number of operations required for the largest fra size.

The first 25 operations shall be conducted at percent of the rated voltage of the electrical ope tor. During each of these operations the circ breaker shall be tripped so as to involve a resett operation.

The balance of the operations shall be co pleted with the electrical operator connected t rated voltage supply and cycled "ON" and "OF without tripping the circuit breaker at a rate agre able to all concerned.

If overcurrent or overload protection is provid with the operator, it shall not function during t endurance test.

If the electrical operator, or any part of the ope ator, is installed within the circuit breaker housi or is installed so as to interfere with the normal ve ing of the circuit breaker, consideration shall given to the need for interrupting current tests to performed on the circuit breaker with the electri operator installed.

Copyright National Electrical Manufacturers Association
Provided by IHS under license with NEMA
No reproduction or networking permitted without license from IHS
Not for Resale

C. Rated Interrupting Current Test

With the electrical operator installed, the circuit breaker shall be subjected to a three-phase test (see Fig. 2-8, Part 2 Page 16), on either the "O" or "CO" cycle, at the specified interrupting current rating for the maximum voltage rating. The electrical operator shall then be capable of withstanding the dielectric withstand test described in par. D, except that the test voltage shall be two times the voltage of the test circuit and shall be gradually increased from zero to the prescribed voltage.

D. Dielectric Withstand Test

With the electrical operator installed, the circuit breaker shall comply with the dielectric withstand test requirements given in AB 1-2.36. In addition, the test voltage shall be applied between:

1. The electrical operator coil winding and live parts of the breaker.

2. The associated wiring and all live parts of the breaker.

3. The coil winding and frame of the electrical operator (the test voltage shall be not less than 900 volts).

E. Spacings

Following installation of the electrical operator, the circuit breaker spacings shall be not less than those given in Table 2-11 (Part 2 Page 26).

F. Application

Electrical operators shall be applied within their assigned ratings. For applications in excess of the assigned ratings, consult the manufacturer.

G. Trip Free

A remote electrical operator shall be so designed that the circuit breaker remains trip free, even when closed by remote power.

H. Reset

A remote electrical operator shall not require manual resetting of the breaker.

I. Manual Operator

An electrical operator shall have provision for manual operation.

NEMA Standard 11-14-1974.

AB 1-8.06 MECHANICAL INTERLOCK

A. Endurance Test

The mechanical interlock shall be capable of being operated for at least the same total number of times and rate of operation consistent with the endurance requirements for the frame size of the breaker in which it is to be used. See Table 2-3 (Part 2 Page 10).

B. Rated Interrupting Current Test

With the mechanical interlock installed, the circuit breaker shall be subjected to a three-phase test (see Fig. 2-8, Part 2 Page 16), on either the "O" or "CO" cycle, at the specified interrupting current rating for the maximum voltage rating. The mechanical interlock shall then be capable of withstanding the dielectric withstand test described in par. C, except that the test voltage shall be two times the voltage of the test circuit and shall be gradually increased from zero to the prescribed voltage.

C. Dielectric Withstand Test

With the mechanical interlock installed, the circuit breaker shall comply with the dielectric withstand test requirements given in AB 1-2.36. In addition, the test voltage shall be applied between the circuit breaker and the metal parts of the mechanical interlock.

D. Spacings

Following installation of the mechanical interlocks, the circuit breaker spacings shall be not less than those given in Table 2-11 (Part 2 Page 26).

NEMA Standard 9-21-1967.

AB 1-8.07 HANDLE LOCKS

A. Spacings

Following installation of the handle locks, the circuit breaker spacings shall be not less than those given in Table 2-11 (Part 2 Page 26).

NEMA Standard 9-21-1967.

AB 1-8.08 DIRECT-CURRENT GROUND CURRENT LIMITER

A. Ratings

The rated currents for direct-current ground current limiters shall be: 3, 5, 10, 20 and 50 direct-current amperes.

Copyright National Electrical Manufacturers Association
Provided by IHS under license with NEMA
No reproduction or networking permitted without license from IHS

Not for Resale

B. Tripping Current

The tripping current of the ground current limiter shall be 90 to 110 percent of the rated current of the trip coil. The limiter shall be capable of carrying its rated current continuously without exceeding the temperature rise specified in the table shown in AB 1-2.03 (Part 2 Page 1).

C. Endurance Test

The ground current limiter, when applied in accordance with par. G, shall be capable of tripping the circuit breaker for at least 10 percent of the number of operations specified in Table 2-3 (Part 2 Page 10) under the column "With Current". During this test, the ground current limiter voltage shall be removed while the breaker is reset and closed.

D. Rated Interrupting Current Test

With the ground current limiter installed, the circuit breaker shall be subjected to a three-phase test (see Fig. 2-8, Part 2 Page 16), on either the "O" or "CO" cycle, at the specified interrupting current rating for the maximum voltage rating. The ground current limiter shall then be capable of withstanding the dielectric withstand test described in par. E, except that the test voltage shall be two times the voltage of the test circuit and shall be gradually increased from zero to the prescribed voltage.

(An alternating-current test is specified even though these devices are used primarily on direct current due to the problems of obtaining direct-current test facilities.)

E. Dielectric Withstand Test

With the ground current limiter installed, the circuit breaker shall comply with the dielectric withstand test requirements given in AB 1-2.36. In addition, the test voltage shall be applied between:

1. The ground-current-limiter coil winding and all live parts of the breaker.

2. The associated wiring and all live parts of the breaker.

3. The coil winding and metal parts of the ground current limiter (the test voltage shall be not less than 900 volts alternating current).

F. Spacings

Following installation of the direct-current ground current limiter, the circuit breaker spacings shall be not less than those given in Table 2-11 (Part 2 Page 26).

G. Application

Ground current limiters shall be applied within their assigned ratings. For applications in excess of the assigned ratings, consult the manufacturer.

NEMA Standard 9-21-1967.

AB 1-8.09 MECHANICAL TRIP DEVICE

A. Endurance Test

The mechanical trip device shall be capable of tripping the circuit breaker for at least 10 percent of the number of operations specified in Table 2-3 (Part 2 Page 10) under the column "With Current".

B. Spacings

Following installation of the mechanical trip devices, the circuit breaker spacings shall be not less than those given in Table 2-11 (Part 2 Page 26).

C. Rated Interrupting Current Test

With the mechanical trip device installed, the circuit breaker shall be subjected to a three-phase test (see Fig. 2-8, Part 2 Page 16), on either the "O" or "CO" cycle, at the specified interrupting current rating for the maximum voltage rating. The mechanical trip device shall then be capable of withstanding the dielectric withstand test described in par. D, except that the test voltage shall be two times the voltage of the test circuit and shall be gradually increased from zero to the prescribed voltage.

D. Dielectric Withstand Test

With the mechanical trip device installed, the circuit breaker shall comply with the dielectric withstand test requirements given in AB 1-2.36.

NEMA Standard 9-21-1967.

Copyright National Electrical Manufacturers Association
Provided by IHS under license with NEMA
No reproduction or networking permitted without license from IHS

Not for Resale

AB*1 75 ■ 2595512 0064657 0 ■

Part 9
ENCLOSURES FOR MOLDED CASE CIRCUIT BREAKERS

AB 1-9.01 GENERAL

A molded-case-circuit-breaker enclosure shall be constructed to have ample strength and rigidity so that it will keep its shape and doors will close tightly. The enclosure shall be of metal, shall enclose completely all current-carrying parts whether dead or alive regardless of the position of the handle, and shall be provided with suitable means for mounting. An open hole or slot which provides for the movement of an operating handle shall be substantially closed when the circuit breaker handle is in an operating position.

The enclosure shall be made of corrosion-resistant metal or shall have both inside and outside surfaces suitably protected by enamelling, painting, galvanizing, plating or other equivalent means.

NEMA Standard 11-12-1970.

AB 1-9.02 TYPES

A. Nonventilated

Type 1—Indoor—General Purpose (See Par. B)

Type 1 enclosures are intended primarily to prevent accidental contact of personnel with the enclosed equipment; however, the circuit breaker handle may be exposed. They are intended for use indoors where they are not exposed to unusual service conditions. In addition, they provide protection against falling dirt. There is no intentional ventilation.

Type 3—Outdoor—Dusttight, Raintight and Sleet (Ice) Resistant

Type 3 enclosures are intended for use outdoors to protect the enclosed equipment against windblown dust and water. They are not sleet (ice) proof.

They shall have conduit hubs or the equivalent provision for watertight connection at the conduit entrance, as well as provision for mounting means external to the equipment cavity and for locking or the equivalent. The design tests for this type of enclosure are the following:

1. The rain test described in AB 1-9.03.
2. The external icing test described in AB 1-9.05.
3. The dust test described in AB 1-9.07.

Type 3R—Outdoor—Rainproof and Sleet (Ice) Resistant

Type 3R enclosures are intended for use outdoors to protect the enclosed equipment against rain and meet the requirements of Underwriters Laboratories Inc. for raintight enclosures. They are not dust, snow, nor sleet (ice) proof. These enclosures shall have a conduit hub or equivalent provision where the conduit enters at a level higher than the lowest live parts, provision for locking the enclosure, and provision for drainage. These enclosures shall prevent the entrance of rain at a level higher than the lowest live part. The design tests for this type of enclosure are the following:

1. The rain test described in AB 1-9.03.
2. The external icing test described in AB 1-9.05.

Type 4—Indoor and Outdoor—Watertight, Dusttight and Sleet-resistant

Type 4 enclosures are intended for use indoors and outdoors to protect the enclosed equipment against splashing water, seepage of water, falling or hose directed water and severe external condensation. They are watertight and dusttight. They are sleet resistant but not sleet (ice) proof. These enclosures shall have conduit hubs or equivalent provision for watertight connection at the conduit entrance and mounting means external to the equipment cavity. The design test for this type of enclosure is the hose-down test described in AB 1-9.04.

Type 5—Indoor—Dusttight

Type 5 enclosures are intended for use indoors to protect the enclosed equipment against fibers and flyings, lint, dust and dirt. The design test for this type of enclosure is the dust test described in AB 1-9.07.

Type 7—Class I, Group(s) A, B, C and/or D—Indoor Hazardous Locations—Air-break Equipment

Type 7 enclosures are intended for use indoors in the atmospheres and locations defined as Class I and Group(s) A, B, C and/or D in the "National Electrical Code." The letter(s) A, B, C and/or D which indicates the gas and/or vapor atmosphere(s) in the hazardous location shall appear as a suffix to the designation "Type 7" to give the complete NEMA designation and corresponds to Class I, Group(s) A, B, C and/or D, respectively, as defined in the "National Electrical Code."

Copyright National Electrical Manufacturers Association
Provided by IHS under license with NEMA
No reproduction or networking permitted without license from IHS
Not for Resale

These enclosures shall be designed and tested in accordance with the requirements of the latest revision of Underwriters Laboratories Inc. "Safety Standard for Industrial Control Equipment For Use in Hazardous Locations," UL 698, and shall be marked to show the Class and Group letter designations. The enclosure shall be evaluated with its enclosed equipment.

Type 9—Class II, Group(s) E, F and/or G—Indoor Hazardous Locations—Air-break Equipment

Type 9 enclosures are intended for use indoors in the atmospheres and locations defined as Class II and Group(s) E, F and/or G in the "National Electrical Code." The letter(s) E, F and/or G which indicates the dust atmosphere(s) in the hazardous location shall appear as a suffix to the designation "Type 9" to give the complete NEMA designation and corresponds to Class II, Group(s) E, F and/or G, respectively, as defined in the "National Electrical Code."

These enclosures shall prevent the ingress of explosive amounts of hazardous dust. If gaskets are used, they shall be mechanically attached and of a noncombustible, nondeteriorating, verminproof material.

These enclosures shall be designed and tested in accordance with the requirements of the latest revision of Underwriters Laboratories Inc. "Safety Standard for Industrial Control Equipment For Use in Hazardous Locations," UL 698, and shall be marked to show the Class and Group letter designations. The enclosure shall be evaluated with its enclosed equipment.

Type 12—Indoor—Industrial Use—Dusttight and Driptight—Without Knockouts

Type 12 enclosures are intended for use indoors to protect the enclosed equipment against fibers, flyings, lint, dust and dirt, and light splashing, seepage, dripping and external condensation of noncorrosive liquids.

When intended for wall mounting, they shall have mounting means external to the equipment cavity, and captive closing hardware. When intended for floor mounting, they shall have closed bottoms and captive closing hardware.

There shall be no holes through the enclosure and no conduit knockouts or conduit openings, except that oiltight or dusttight mechanisms may be mounted through holes in the enclosure when provided with oil-resistant gaskets. Doors shall be provided with oil-resistant gaskets and shall have provision for locking or require the use of a tool to gain entry.

The design tests for this type of enclosure are the following:

1. The drip test described in AB 1-9.06.

2. The dust test described in AB 1-9.07.

Type 12K—Indoor—Industrial Use—Dusttight and Driptight—With Knockouts

Type 12K enclosures are intended for use indoors to protect the enclosed equipment against fibers, flyings, lint, dust, dirt, and light splashing. They shall have the same provisions as Type 12 enclosures, except that knockouts are provided in the top and/or bottom walls only. Prior to installation, they are driptight and dusttight except at the knockout location(s).

The design tests for this type of enclosure are the following:

1. The drip test described in AB 1-9.06.

2. The dust test described in AB 1-9.07.

B. Ventilated

Type 1—Indoor—General Purpose

Type 1 enclosures which are designed for indoor use and intended to house a circuit breaker having a frame size of 800 amperes or more may be provided with ventilating openings.

Ventilating openings shall be so designed and located that no flame or molten metal will be emitted during the short-circuit test on the circuit breaker.

Ventilating openings shall be of such a size or shape or shall be so covered by screening or by an expanded, perforated, or louvered metal panel as to prevent the entrance of a test rod having the diameter specified in the following paragraph:

Copyright National Electrical Manufacturers Association
Provided by IHS under license with NEMA
No reproduction or networking permitted without license from IHS
Not for Resale

AB*1 75 ■ 2595512 0064659 4 ■

The test rod shall be 33/64 inch in diameter if the plane of the opening is less than 4 inches from an uninsulated live part or 49/64 inch in diameter if the plane of the opening is 4 inches or more from such a part.

The size, shape and location of ventilating openings shall be such as not to unduly weaken the overall enclosure.

A ventilating opening in the top of the enclosure shall be covered by a hood or protective shield spaced above the opening to prevent the entry of foreign material.

NEMA Standard 11-14-1974.

AB 1-9.03 RAIN TEST (RAINPROOF AND RAINTIGHT)

A. Test Procedure

The complete enclosure shall be mounted with the conduit connected but without using pipe-thread sealing compound. The rigid conduit shall be threaded into the opening in the enclosure and tightened with the following torque:

Nominal Size of Conduit, Inches	Torque, Pound-Inches
3/4 and smaller	800
1, 1 1/4 and 1 1/2	1000
2 and larger	1600

A continuous water spray, using as many nozzles as required, shall be applied against the entire top and all exposed sides of the enclosure for 1 hour at a rate of at least 18 inches per hour at an operating pressure of 5 psi. The rate shall be determined by measuring the rise of water in a straight-sided pan which has been placed horizontally and completely within the area covered by the falling water. A rain test which is performed in accordance with Underwriters Laboratories Inc. "Rain Tests of Electrical Equipment," Bulletin of Research #23, September, 1941, is considered to be equivalent to this test.

B. Rainproof

An enclosure is considered rainproof if:

1. There is no significant accumulation of water within the enclosure, and
2. No water has entered the enclosure at a level higher than the lowest live part, except that water may enter above live parts if the apparatus is so constructed that no water is visible on the live parts, insulating material or mechanism parts and no water has entered any space above the live parts within the enclosure in which wiring may be present under any proper installation conditions.

C. Raintight

An enclosure is considered raintight if no water has entered the enclosure.

NEMA Standard 11-14-1974.

AB 1-9.04 HOSEDOWN TEST (WATERTIGHT AND DUSTTIGHT)

The enclosure and its external mechanisms shall be subjected to a stream of water from a hose which has a 1-inch nozzle and which delivers at least 65 gallons per minute. The water shall be directed at the enclosure from all angles from a distance of 10 to 12 feet for a total period of 5 minutes. A conduit may be installed to equalize internal and external pressures but shall not serve as a drain. The enclosure is considered watertight and dusttight if no water has entered the enclosure.

NEMA Standard 11-12-1970.

AB 1-9.05 EXTERNAL ICING TEST (SLEET-RESISTANT AND SLEETPROOF)

A. Test Procedure

The enclosure shall be mounted in a room which can be cooled to 20°F. A metal test bar which is 1 inch in diameter and 2 feet long shall be mounted in a horizontal position in a location where it will receive the same general water spray as the enclosure under test.

Provision shall be made for spraying the entire enclosure from above with water at an angle of approximately 45 degrees from the vertical. The water shall be between 32°F and 37°F. (As a guide, spraying facilities which provide between 1 and 2 gallons per hour per square foot of area to be sprayed have been found effective.)

The room temperature shall be lowered to 35°F. The spray of water shall be started and continued for at least 1 hour, maintaining the room temperature between 33°F and 37°F.

Copyright National Electrical Manufacturers Association
Provided by IHS under license with NEMA
No reproduction or networking permitted without license from IHS
Not for Resale

At the end of this time, the room temperature shall be lowered to between 20°F and 27°F without discontinuing the water spray. (The rate of change in the room temperature is not critical and shall be whatever is obtainable with the cooling means employed.) The water spray shall be controlled so as to cause ice to build up on the bar at a rate of approximately 1/4 inch per hour and shall be continued until 3/4 inch of ice has formed on the top surface of the bar. The spray shall then be discontinued, but the room temperature shall be maintained between 20°F and 27°F for 3 hours to insure that all parts of the enclosure and ice coatings have been equalized to a constant temperature.

B. Sleetproof

The enclosure and its external mechanisms shall be considered sleetproof if, when ice laden, they can be manually operated by one person without any damage to the enclosure, the enclosed equipment, or mechanism. When an auxiliary mechanism is provided to break the ice, it shall be included and utilized in the test. A separate test is required for each maintained position of each external operator. If necessary, it shall be possible to gain access to the enclosure interior using an appropriate hand tool without causing functional damage to the enclosure.

C. Sleet-resistant

The enclosure and its external mechanisms shall be considered sleet-resistant if they are found to be undamaged after the ice has melted. Enclosures which have no external cavities to trap water are considered to be inherently sleet-resistant and shall not be tested.

NEMA Standard 11-12-1970.

AB 1-9.06 DRIPPING LIQUID TEST (DRIPPROOF AND DRIPTIGHT)

A. Test Procedure

The enclosure shall be mounted beneath a drip pan which extends beyond all exposed sides of the enclosure and which produces both splashing and dripping. The bottom of the drip pan shall be equipped with uniformly distributed spouts, one for each 20 square inches of pan area. Each spout shall have a drip rate of approximately 20 drops per minute of water. The enclosure shall be subjected to continuously dripping water for 30 minutes.

B. Dripproof

The apparatus is considered dripproof if:

1. There is no significant accumulation of water within the enclosure, and

2. No water has entered the enclosure at a level higher than the lowest live part, except that water may enter above live parts if the equipment is so constructed that no water is visible on the live parts, insulating material or mechanism parts and no water has entered any space above the live parts within the enclosure in which wiring may be present under any proper installation conditions.

C. Driptight

An enclosure is considered to be driptight if no water has entered the enclosure.

NEMA Standard 11-12-1970.

AB 1-9.07 DUST TEST (DUSTTIGHT)

A. Dust-blast Method

The enclosure shall be subjected to a blast of compressed air mixed with dry Type 1 general-purpose Portland cement†, using a suction-type sand blast gun which is equipped with a 3/16-inch-diameter air jet and a 3/8-inch-diameter nozzle. The air shall be dry and at a pressure of 90 to 100 pounds per square inch. The cement shall be supplied by a suction feed.

Not less than 4 pounds of cement per linear foot of test length* of the test specimen shall be applied at a rate of 5 pounds per minute. The nozzle shall be held from 12 to 15 inches away from the enclosure, and the blast of air and cement shall be directed at all points of potential dust entry, such as seams, joints, external operating mechanisms, etc. A conduit may be installed to equalize the internal and external pressures.

The enclosure is considered dusttight if no cement dust has entered the enclosure.

* Test length is the summation of the height plus the width plus the depth.

† Type 1 general-purpose Portland cement has been chosen because it is readily available and has a

Copyright National Electrical Manufacturers Association
Provided by IHS under license with NEMA
No reproduction or networking permitted without license from IHS
Not for Resale

controlled maximum particle size. The analysis of a typical sample is as follows:

Particle Size		Percent
Mesh	Inches	Content
Coarser than 200	Larger than 0.0029	3
200	0.0029	8
325	0.0017	7
400	0.0015 or smaller	82

B. Atomized Water Method
(Alternate to Dust-blast Method)

The enclosure shall be subjected to a spray of atomized water, using a nozzle which produces a round pattern 3 to 4 inches in diameter when measured 12 inches from the nozzle. The air pressure shall be 30 pounds per square inch. The water shall be supplied by a suction feed with a siphon height of 4 to 8 inches.

Not less than 5 ounces per linear foot of test length* of the test specimen shall be applied at a rate of 3 gallons per hour. The nozzle shall be held from 12 to 15 inches away from the enclosure, and the spray of water shall be directed at all points of potential dust entry, such as seams, joints, external operating mechanisms, etc.‡ A conduit may be installed to equalize the internal and external pressures but shall not serve as a drain.

The enclosure is considered dusttight if no water has entered the enclosure.

* Test length is the summation of the height plus the width plus the depth.

‡ Metal-to-metal joints with a ground contact surface at least 3/16 inch in width shall not be tested. Ungasketed shaft openings which have a length-of-path not less than 1/2 inch shall not be tested if the total (diametric) clearance between the shaft and the opening is not more than 0.005 inch per 1/2 inch length-of-path. These joints and openings shall be protected by suitable external means during the atomized water test.

NEMA Standard 11-12-1970.

MANUFACTURING STANDARDS

AB 1-9.20 DESIGN AND CONSTRUCTION OF OPERATING MECHANISM

The design and construction of the operating mechanism, when included, shall be such as to insure ample strength and rigidity. Screws and nuts serving to attach operating parts to movable members shall be upset or otherwise locked to prevent loosening under the jarring of continued use. Stops shall be provided if required to remove undue strain from circuit breaker parts.

A suitable handle shall be provided for safe and convenient manipulation of the circuit breaker. An operating handle of conducting material shall be in electrical connection with the enclosure.

If the position of a circuit breaker is indicated by the position of the operating handle, there shall be definite "off" and "on" indicated positions for the handle, and the design of the operating mechanism shall be such that the handle cannot be left readily at or near the "of" position when the circuit breaker is on. If the handle movement is vertical, the upper position shall be "on".

All metal parts, unless of corrosion-resistant material, shall be galvanized, plated, enamelled, painted or otherwise treated to prevent corrosion.

NEMA Standard 11-12-1970.

AB 1-9.21 SPACINGS

Except as otherwise noted in this publication, the spacings in an enclosed circuit breaker shall be as indicated in Table 9-1. "Grounded dead metal" includes the enclosure and any dead metal which may be in electrical connection with the enclosure.

Table 9-1

Voltage Between Parts Involved	Minimum Spacing, Inches: Between Uninsulated Live Metal Parts of Opposite Polarity		Between Uninsulated Live Metal Parts and Any Grounded Dead Metal	
	Over Surface	Through Air	Over Surface	Through Air
0-125	3/4	1/2	1/2	1/2
126-300	1 1/4	3/4	1/2	1/2
301-600	2	1	1	1/2

NEMA Standard 11-12-1970.

Copyright National Electrical Manufacturers Association
Provided by IHS under license with NEMA
No reproduction or networking permitted without license from IHS
Not for Resale

AB 1-9.22 SPACINGS BETWEEN LIVE PARTS AND BUSHINGS IN KNOCKOUTS

The spacings in an enclosed circuit breaker between uninsulated current-carrying parts and bushings installed in at least two usable knockouts shall be in accordance with Table 9-1. For the purpose of measurement, it shall be assumed that required bushings having the dimensions shown in Table 9-2 are in place and that no locknuts are used between the enclosure wall and bushings. Also, for the purpose of measurement, the conduit size shall be the minimum required for the maximum number and gauge of wires necessitated by the circuit breaker rating.

Table 9-2

Trade Size of Conduit, Inches	Bushing Dimensions, Inches	
	Overall Diameter	Height
1/2	1	3/8
3/4	1 15/64	27/64
1	1 19/32	33/64
1 1/4	1 15/16	9/16
1 1/2	2 13/64	19/32
2	2 45/64	5/8
2 1/2	3 7/32	3/4
3	3 7/8	13/16
3 1/2	4 7/16	15/16
4	4 31/32	1
4 1/2	5 35/64	1 1/16
5	6 7/32	1 3/16
6	7 7/32	1 1/4

NEMA Standard 11-12-1970.

AB 1-9.23 DISTANCE BETWEEN END OF WIRING LUGS AND OPPOSITE WALL

The distance between the end of any wire connector or lug and the wall of the enclosure toward which the conductor is directed or through which the connected connector may normally pass shall be as indicated in Table 9-3.

Table 9-3

AWG or MCM* Size of Wire or Cable	Minimum Bending Space, Inches, From Terminal to Adjacent Wall, Number of Wires				
	1	2	3	4	5
14-8	Not specified				
6	1 1/2	..	..	..	..
4-3	2	..	..	..	..
2	2 1/2	..	..	..	..
1	3	..	..	..	..
1/0-2/0	3 1/2	..	..	..	..
3/0-4/0	4	6	8	..	..
250	4 1/2	6	8	10	..
300-350	5	8	10	12	..
400-500	6	8	10	12	14
600-700	8	10	12	14	16
750-900	8	12	14	16	18

* MCM = thousands of circular mils.

NEMA Standard 11-12-1970.

The table includes commonly used multiple-conductor combinations. Combinations not mentioned above may require further consideration.

Authorized Engineering Information 11-12-1970.

AB 1-9.24 WIRING SPACE

The space within the circuit breaker enclosure after mounting of the circuit breaker shall be sufficient to provide ample room for the distribution of wires and cables. The clear wiring space at any point, independent of all projections and obstructions, and free from interference from moving parts of the handle mechanism, shall be not less in width or depth than the values given in Table 9-4 and shall be not less in cross-sectional area than 250 percent of the total cross-sectional area of the maximum number of the wires which may be used in such a space.

The minimum areas of the clear wiring space for some of the more common multiple wires shall be in accordance with Table 9-4.

NEMA Standard 11-12-1970.

AB 1-9.25 PADLOCKING

Means shall be provided to positively lock the circuit breaker in the "off" position with a padlock.

NEMA Standard 11-12-1970.

Copyright National Electrical Manufacturers Association
Provided by IHS under license with NEMA
No reproduction or networking permitted without license from IHS
Not for Resale

Table 9-4

Maximum AWG or MCM* Size of Wire or Cable Involved	Clear Wiring Space					
	Minimum Width and Depth of Wiring Space, Inches	Minimum Areas Required for Multiple Wires (Based on Factor of 2.5), Square Inches				
		Two Wires	Three Wires	Four Wires	Five Wires	Six Wires
10	3/8†	0.23	0.34	0.46	0.57	0.68
8	1/2	0.38	0.57	0.76	0.95	1.14
6	5/8	0.62	0.93	1.24	1.55	1.86
4	3/4	0.80	1.20	1.60	2.00	2.40
2	7/8	1.03	1.55	2.06	2.58	3.10
1	1	1.36	2.04	2.72	3.40	4.08
1/0	1	1.55	2.33	3.10	3.88	4.66
2/0	1	1.79	2.68	3.58	4.47	5.36
3/0	1 1/8	2.08	3.11	4.16	5.19	6.22
4/0	1 1/4	2.42	3.63	4.84	6.05	7.26
250	1 3/8	2.96	4.44	5.92	7.40	8.88
300	1 1/2	3.42	5.13	6.84	8.55	10.26
350	1 1/2	3.81	5.72	7.62	9.53	11.44
400	1 5/8	4.18	6.27	8.36	10.45	12.54
500	1 3/4	4.92	7.38	9.84	12.30	14.76
600	1 7/8	5.97	8.96	11.94	14.93	17.92
700	2	6.68	10.02	13.36	16.70	20.04
750	2	7.04	10.56	14.08	17.60	21.12

* MCM = thousands of circular mils.

† The minimum clear width and depth of the wiring space in an enclosed circuit breaker marked as being suitable for use as service equipment shall be not less than 1/2 inch in any case.

Copyright National Electrical Manufacturers Association
Provided by IHS under license with NEMA
No reproduction or networking permitted without license from IHS

Not for Resale

AB*1 75 ■ 2595512 0064664 8 ■

Appendix A
DETERMINATION OF SHORT-CIRCUIT CURRENTS IN LOW-VOLTAGE SYSTEMS

(Approved as Authorized Engineering Information 11-14-1974.)

In order to determine the interrupting capacity requirements for low-voltage air circuit breakers, it is necessary to obtain certain information, at the point of application, of the short-circuit condition that exists in every part of a distribution system.

Part A
THREE-PHASE SYSTEMS

The circuit diagram shown in Fig. A-1 includes the factors which are usually considered in the calculation of short-circuit currents. The calculations were made for a system, as shown in Fig. A-1, for various transformer kVA ratings and secondary voltages in combination with common sizes and various lengths of cable. The calculations were based on those covered in AIEE (now IEEE) Transaction Paper No. 55-442 and the results are shown in Tables A-3 through A-10.

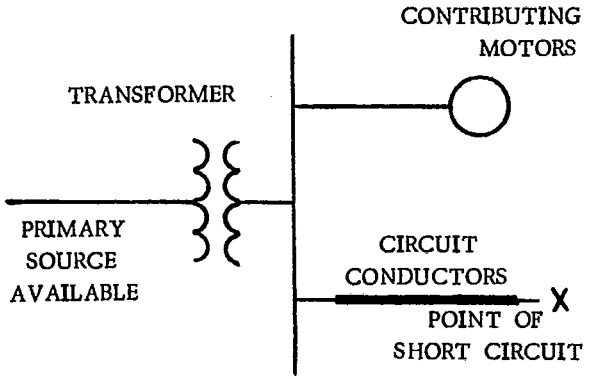

Fig. A-1
CIRCUIT INVESTIGATED

Referring to Fig. A-1, the following basic characteristics were used in the study:

1. Primary source available is assumed as 1000 MVA at the primary of the transformer, with a source circuit X/R ratio of 25.

2. Transformer kVA sizes shown in Table A-1.

3. Distribution voltages of 208, 240, 480 and 600 volts, three-phase, 60 hertz.

4. Tables A-3 through A-10 are based on the transformer impedances shown in Table A-1. Impedances of transformers rated 150 kVA through 500 kVA are the minimum specified by standards. The impedances of transformers rated 750 kVA through 2000 kVA are 5.75 percent of the nominal, minus the 7.5 percent tolerance. X/R ratios are not specified by NEMA Standards and have been selected from data furnished by manufacturers.

5. Motor contribution: for system voltages of 120 and 120/208 volts, it is usual to assume that the connected load consists of 50 percent lighting and 50 percent motor load. This corresponds to an equivalent symmetrical contribution of twice the full connected load. For system voltages of 240 to 600 volts, it is usual to assume that the connected load consists of 100 percent motor load and, in the absence of exact information, that 25 percent of the motors are synchronous motors and 75 percent are induction motors. This corresponds to an equivalent symmetrical contribution of four times the full connected load. Short-circuit calculations were based on a motor impedance of X/R ratio of 6.

6. Feeder conductors chosen are the size normally used for standard frame sizes of low-voltage air circuit breakers. Calculations are based on three-phase conductors at 75°C in magnetic ducts. Tables A-3 through A-10 are calculations made for copper conductors having the characteristics shown in Table A-2. The characteristics of aluminum conductors, when compared on the basis of equivalent ampacity, are so similar to copper

Copyright National Electrical Manufacturers Association
Provided by IHS under license with NEMA
No reproduction or networking permitted without license from IHS
Not for Resale

conductors that calculations for aluminum conductors are not included. In general, the impedances of aluminum conductors are slightly higher than those of equivalent copper conductors and the available short-circuit current amperes are slightly lower.

7. The available short-circuit current can be read directly when the transformer kVA, wire size and distance from the transformer are known by simply referring to the corresponding values listed in Tables A-3 through A-10.

Part B
SINGLE-PHASE, 3-WIRE, 120/240-VOLT SYSTEMS

The circuit diagram shown in Fig. A-2 includes the factors which are usually considered in the calculation of short-circuit currents. The calculations were made for a system, as shown in Fig. A-2, for the various transformer kVA ratings given in Table A-11 in combination with common sizes and various lengths of cables. Cable impedances are shown in Table A-12.

Referring to Fig. A-2, the following basic characteristics were used in the study:

1. Primary source available is assumed to be a line-to-ground transformer primary connection near a primary substation, where the planned maximum future available short-circuit duty corresponds to a 20 000-ampere symmetrical rms current on a 34 500-volt system, with an assumed source circuit X/R ratio of 25.

2. Transformer kVA sizes shown in Table A-11.

3. Tables A-13 through A-19 are based on the transformer impedances shown in Table A-11 which is based on typical distribution transformer data from which the impedances are the smallest of those listed for transformers with at least 7200/12470Y-volt primary voltage ratings and are based on the full 240-volt secondary winding rated kVA. R and X for a 120-volt half-winding short circuit, based on full rated kVA, are calculated as 1.5 and 1.2 times the tabulated full winding R and X, respectively.

4. Conductors chosen are the sizes normally used for 120/240-volt services. Calculations are based on triplexed conductors having the characteristics shown in Table A-12.

5. The available short-circuit current can be read directly, when the transformer kVA, wire size and distance from the transformer are known by simply referring to the corresponding values listed in Tables A-13 through A-19.

These tables are intended primarily for estimating the short-circuit currents available at residential locations and, therefore, do not include motor contribution which is considered to be minimal and not a significant factor.

Copyright National Electrical Manufacturers Association
Provided by IHS under license with NEMA
No reproduction or networking permitted without license from IHS
Not for Resale

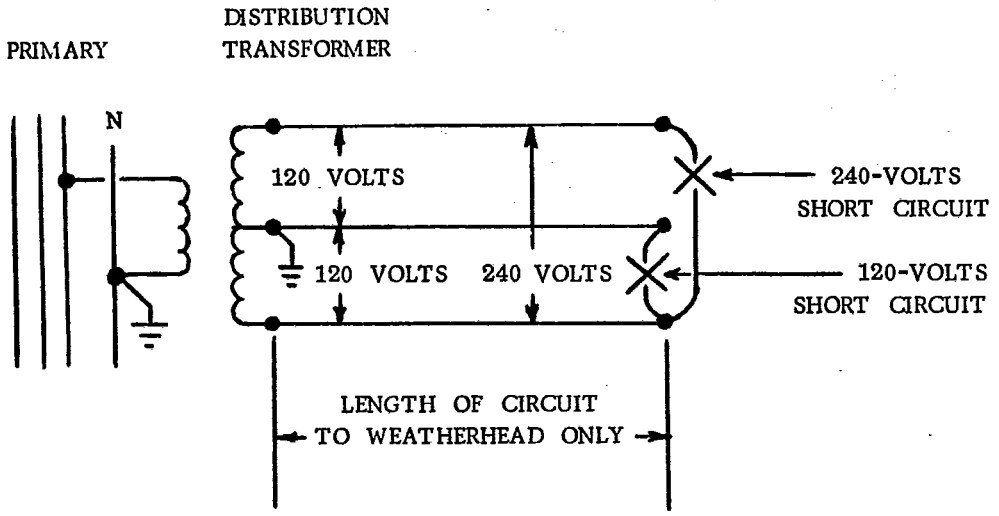

Fig. A-2
CIRCUIT INVESTIGATED

Table A-1
Transformer Impedances

(Based on the NEMA Standards Publication for Secondary Unit Substations, Publication No. 210-1970.)

Three-phase kVA	Percent Impedance R	Percent Impedance X	Percent Impedance Z	X/R Ratio	Short-circuit Table
150	1.109	1.664	2.0	1.5	A-3
225	1.109	1.664	2.0	1.5	A-4
300	1.236	4.327	4.5	3.5	A-5
500	1.131	4.356	4.5	3.85	A-6
750	0.9685	5.230	5.32	5.4	A-7
1000	0.9270	5.237	5.32	5.65	A-8
1500	0.8604	5.249	5.32	6.10	A-9
2000	0.7968	5.259	5.32	6.60	A-10

The data in Table A-1 is based on liquid-filled self-cooled transformers. Dry-type transformers have, in general, higher reactances and the results of this study should also be conservative for systems in which they are used.

Copyright National Electrical Manufacturers Association
Provided by IHS under license with NEMA
No reproduction or networking permitted without license from IHS

Not for Resale

Table A-2
Copper and Aluminum Feeder or Branch Circuit Impedances

The following impedances are for three-phase conductors in magnetic conduit.

The ampacities given are for Type T or TW for wire sizes up through 8 AWG for copper and 6 AWG for aluminum, and Type THW or RHW for larger sizes. Units of R and X are in ohms per 1000 feet at 60 hertz.

Probable Design Ampacity	Copper Feeders				Aluminum Feeders			
	Size, AWG or MCM	Ampacity	R	X	Size, AWG or MCM	Ampacity	R	X
15	14	15	3.065	0.0423	12	15	3.185	0.0396
20	12	20	1.932	0.0396	10	25	2.000	0.0371
30	10	30	1.214	0.0371	8	30	1.257	0.0389
40	8	40	0.7638	0.0389	6	40	0.8071	0.0401
60	6	65	0.4890	0.0401	4	65	0.5077	0.0378
75	4	85	0.3089	0.0378	2	90	0.3185	0.0359
100	2	115	0.1952	0.0359	1/0	120	0.2012	0.0350
125	1	130	0.1554	0.0360	2/0	135	0.1593	0.0342
150	1/0	150	0.1241	0.0350	3/0	155	0.1270	0.0334
175	2/0	175	0.09963	0.0342	4/0	180	0.1011	0.0326
200	3/0	200	0.07963	0.0334	250	205	0.08648	0.0328
400	Two 3/0	400	0.03981	0.0167	Two 250	410	0.04324	0.0164
225	4/0	230	0.06374	0.0326	300	230	0.07207	0.0321
250	250	255	0.05449	0.0328	350	250	0.06229	0.0315
500	Two 250	510	0.02724	0.0164	Two 350	500	0.03114	0.01575
800	Three 300	855	0.01531	0.0107	Three 400	810	0.01835	0.01033
300	350	310	0.03966	0.0315	500	310	0.04493	0.0301
600	Two 350	620	0.01983	0.01575	Two 500	620	0.02246	0.01505
900	Three 350	930	0.01322	0.0105	Three 500	930	0.01498	0.01003
1000	Three 400	1005	0.01181	0.01033	Three 600	1020	0.01272	0.00997
350	500	380	0.02911	0.0301	750	385	0.03165	0.0290
700	Two 500	760	0.01455	0.01505	Two 750	770	0.01582	0.0145
450	750	475	0.02078	0.0290	1250	485	0.02160	0.0273
1600	Four 750	1900	0.00519	0.00725	Four 1250	1940	0.00540	0.006825

Copyright National Electrical Manufacturers Association
Provided by IHS under license with NEMA
No reproduction or networking permitted without license from IHS
Not for Resale

Copyright National Electrical Manufacturers Association
Provided by IHS under license with NEMA
No reproduction or networking permitted without license from IHS

Not for Resale

AB*1 75 ■ 2595512 0064668 5 ■

Table A-3

Symmetrical Three-phase Bolted Short-circuit Currents in Amperes at Various Distances From a Liquid-filled Transformer
Rated 150 kVA, Z = 2.00 Percent

Transformer Secondary Voltage	Distance, Feet	Wire Size of Copper Conductors																							
		14 AWG	12 AWG	10 AWG	8 AWG	6 AWG	4 AWG	2 AWG	1 AWG	1/0 AWG	2/0 AWG	3/0 AWG	Two 3/0 AWG	4/0 AWG	250 MCM	Two 250 MCM	Three 250 MCM	300 MCM	350 MCM	Two 350 MCM	Three 350 MCM	Three 400 MCM	500 MCM	Two 500 MCM	750 MCM	Four 750 MCM
208 Volts	0	21451	21451	21451	21451	21451	21451	21451	21451	21451	21451	21451	21451	21451	21451	21451	21451	21451	21451	21451	21451	21451	21451	21451	21451
	5	6324	8834	11634	14271	16345	17932	19012	19390	19704	19951	21055	20787	20320	20407	20918	21125	20569	21002	21150	21166	20692	21065	20790	21282
	10	3526	5241	7512	10166	12754	15105	16911	17583	18149	18601	18979	20155	19287	19450	20407	20808	19754	20569	20856	20889	19984	20692	20168	21115
	25	1503	2325	3549	5260	7378	9894	12397	13499	14490	15332	16065	18433	16680	17015	19001	19908	17639	19368	20019	20096	18120	19648	18506	20631
	50	767	1202	1874	2877	4247	6125	8375	9531	10664	11706	12677	16065	13533	14022	17015	18558	14945	17639	18757	18896	15675	18120	16272	19871
	100	387	611	963	1503	2281	3435	5000	5906	6871	7840	8819	12677	9748	10313	14022	16319	11418	14945	16643	16871	12332	15675	13106	18506
	200	194	308	487	768	1181	1821	2747	3325	3976	4675	5432	8819	6203	6705	10313	13107	7732	11418	13555	13874	8636	12332	9434	16272
	500	78	123	196	311	482	754	1164	1432	1746	2101	2507	4551	2948	3254	5701	8186	3915	6654	8667	9021	4540	7508	5125	11944
	1000	39	62	98	156	243	381	593	734	901	1093	1319	2507	1570	1749	3254	5014	2145	3915	5397	5685	2534	4540	2910	8275
	2000	19	31	49	78	121	191	299	371	458	558	677	1319	811	908	1749	2820	1126	2145	3071	3264	1345	2534	1560	5125
	5000	7	12	19	31	48	77	120	149	185	226	275	544	331	371	732	1218	464	910	1338	1432	558	1089	652	2392
240 Volts	0	19257	19257	19257	19257	19257	19257	19257	19257	19257	19257	19257	19257	19257	19257	19257	19257	19257	19257	19257	19257	19257	19257	19257	19257
	5	6883	9328	11845	14021	15615	16779	17549	17815	18035	18208	18350	18795	18465	18525	18885	19030	18639	18943	19047	19058	18724	18987	18792	19139
	10	3953	5772	8058	10540	12769	14650	16013	16505	16914	17239	17508	18350	17727	17841	18525	18808	18057	18639	18841	18864	18220	18724	18349	19022
	25	1716	2636	3975	5785	7908	10262	12428	13328	14116	14769	15328	17110	15790	16038	17516	18169	16500	17778	18247	18301	16854	17977	17137	18680
	50	881	1375	2132	3241	4716	6652	8833	9892	10896	11789	12597	15328	13293	13681	16038	17188	14409	16500	17332	17432	14977	16854	15437	18135
	100	446	702	1103	1715	2582	3842	5488	6406	7356	8281	9187	12597	10022	10516	13681	15497	11468	14409	15742	15913	12239	14977	12880	17137
	200	224	354	561	881	1351	2068	3090	3712	4403	5128	5896	9187	6658	7142	10516	12916	8115	11468	13279	13536	8950	12239	9674	15437
	500	90	142	226	358	555	864	1329	1630	1981	2372	2815	4991	3290	3614	6147	8554	4305	7075	8995	9316	4947	7888	5537	11895
	1000	45	71	113	180	279	438	681	841	1031	1248	1501	2815	1780	1977	3614	5445	2411	4305	5827	6113	2832	4947	3233	8603
	2000	22	35	56	90	140	221	344	427	526	640	775	1501	927	1036	1977	3145	1281	2411	3412	3616	1526	2832	1764	5537
	5000	9	14	22	36	56	88	138	172	213	260	316	624	380	427	837	1385	532	1038	1519	1623	640	1240	746	2676
480 Volts	0	9628	9628	9628	9628	9628	9628	9628	9628	9628	9628	9628	9628	9628	9628	9628	9628	9628	9628	9628	9628	9628	9628	9628	9628
	5	7068	7922	8520	8906	9145	9306	9408	9442	9471	9493	9512	9570	9527	9535	9581	9600	9549	9589	9602	9603	9560	9594	9569	9613
	10	5317	6521	7510	8218	8677	8991	9192	9260	9317	9361	9397	9512	9427	9442	9535	9571	9471	9549	9575	9578	9493	9560	9511	9599
	25	2909	4054	5319	6497	7412	8105	8574	8737	8873	8979	9067	9341	9138	9175	9397	9487	9245	9433	9497	9504	9298	9460	9340	9554
	50	1625	2413	3452	4656	5818	6863	7656	7949	8195	8391	8555	9067	8688	8758	9175	9349	8889	9245	9369	9384	8988	9298	9067	9482
	100	858	1318	1987	2892	3954	5131	6214	6664	7058	7384	7664	8555	7895	8019	8758	9084	8250	8889	9123	9150	8427	8988	8568	9340
	200	440	687	1066	1620	2358	3326	4416	4946	5448	5894	6298	7664	6646	6840	8019	8594	7204	8250	8666	8716	7488	8427	7718	9067
	500	178	282	444	693	1052	1583	2300	2714	3154	3593	4035	5771	4453	4706	6366	7382	5199	6772	7523	7623	5605	7092	5947	8339
	1000	89	142	225	354	545	839	1266	1531	1830	2150	2495	4035	2846	3073	4706	5956	3537	5199	6154	6295	3944	5605	4301	7353
	2000	45	71	113	179	277	432	664	815	990	1186	1407	2495	1645	1807	3073	4277	2152	3537	4497	4658	2473	3944	2768	5947
	5000	18	28	45	72	112	176	273	338	415	504	608	1155	723	805	1497	2302	988	1799	2476	2607	1166	2084	1338	3778
600 Volts	0	7703	7703	7703	7703	7703	7703	7703	7703	7703	7703	7703	7703	7703	7703	7703	7703	7703	7703	7703	7703	7703	7703	7703	7703
	5	6326	6809	7130	7331	7454	7537	7589	7607	7622	7633	7643	7673	7650	7654	7678	7688	7662	7682	7689	7690	7668	7685	7672	7695
	10	5196	5994	6579	6967	7210	7373	7477	7513	7542	7565	7584	7643	7599	7607	7654	7673	7622	7662	7675	7677	7633	7668	7642	7687
	25	3216	4227	5192	5971	6514	6900	7151	7237	7308	7364	7410	7554	7447	7467	7583	7630	7503	7602	7635	7639	7531	7616	7553	7665
	50	1909	2732	3709	4697	5523	6182	6642	6805	6940	7046	7135	7410	7206	7244	7467	7558	7314	7503	7569	7576	7367	7531	7409	7627
	100	1040	1568	2294	3191	4126	5031	5762	6042	6279	6470	6631	7135	6762	6831	7244	7419	6960	7314	7439	7454	7059	7367	7137	7553
	200	542	839	1281	1900	2665	3573	4474	4869	5224	5524	5785	6631	6003	6122	6831	7153	6343	6960	7192	7220	6513	7059	6650	7409
	500	222	349	547	845	1262	1852	2592	2988	3388	3766	4126	5430	4450	4638	5816	6454	4996	6072	6537	6595	5282	6270	5517	7009
	1000	112	176	279	437	667	1015	1499	1787	2100	2422	2755	4126	3079	3280	4638	5537	3677	4996	5667	5759	4012	5282	4297	6430
	2000	56	89	141	222	343	531	808	983	1183	1401	1642	2755	1891	2056	3280	4295	2398	3677	4464	4586	2705	4012	2979	5517
	5000	22	35	56	89	139	218	338	417	510	616	738	1364	872	966	1731	2549	1170	2042	2714	2835	1366	2326	1551	3869

Copyright National Electrical Manufacturers Association
Provided by IHS under license with NEMA
No reproduction or networking permitted without license from IHS
Not for Resale

AB*1 75 2595512 0064669 7

Table A-4

Symmetrical Three-phase Bolted Short-circuit Currents in Amperes at Various Distances From a Liquid-filled Transformer
Rated 225 kVA, Z = 2.00 Percent

Transformer Secondary Voltage	Distance, Feet	Wire Size of Copper Conductors																							
		14 AWG	12 AWG	10 AWG	8 AWG	6 AWG	4 AWG	2 AWG	1 AWG	1/0 AWG	2/0 AWG	3/0 AWG	Two 3/0 AWG	4/0 AWG	250 MCM	Two 250 MCM	Three 300 MCM	350 MCM	Two 350 MCM	Three 350 MCM	Three 400 MCM	500 MCM	Two 500 MCM	750 MCM	Four 750 MCM
208 Volts	0	32080	32080	32080	32080	32080	32080	32080	32080	32080	32080	32080	32080	32080	32080	32080	32080	32080	32080	32080	32080	32080	32080	32080	32080
	5	6800	9890	13734	17861	21527	24599	26817	27617	28284	28812	29251	30614	29607	29795	30900	31356	30146	31084	31409	31447	30412	31224	30622	31702
	10	3655	5553	8235	11683	15469	19355	22869	23982	25110	26029	26807	29251	27445	27786	29795	30662	28421	30146	30765	30837	28906	30412	29292	31334
	25	1525	2378	3681	5584	8098	11371	15022	16781	18443	19916	21247	25711	22390	23028	26871	28740	24224	27628	28975	29139	25157	28206	25913	30279
	50	773	1216	1908	2963	4454	6609	9405	10953	12550	14097	15608	21247	16995	17816	23028	25995	19393	24224	26396	26677	20670	25157	21734	28669
	100	389	614	971	1525	2335	3571	5322	6385	7561	8791	10089	15608	11374	12188	17816	21776	13820	19393	22374	22798	15219	20670	16431	25913
	200	195	309	490	773	1195	1856	2836	3463	4186	4981	5870	10089	6804	7432	12188	16374	8751	13820	17102	17629	9953	15219	11042	21734
	500	78	124	197	312	485	760	1179	1456	1784	2158	2593	4851	3073	3412	6215	9326	4157	7392	9973	10455	4878	8483	5565	14645
	1000	39	62	98	156	243	382	597	740	911	1108	1342	2593	1604	1793	3412	5414	2215	4157	5870	6218	2636	4878	3046	9486
	2000	19	31	49	78	122	192	300	373	460	562	683	1342	820	919	1793	2940	1145	2215	3217	3432	1373	2636	1599	5565
	5000	7	12	19	31	48	77	120	150	185	226	276	548	332	373	739	1239	467	922	1365	1463	563	1108	659	2484
240 Volts	0	28802	28802	28802	28802	28802	28802	28802	28802	28802	28802	28802	28802	28802	28802	28802	28802	28802	28802	28802	28802	28802	28802	28802	28802
	5	7547	10727	14434	18098	21097	23454	25081	25654	26128	26502	26812	27780	27062	27193	27977	28297	27440	28105	28334	28360	27627	28202	27775	28538
	10	4138	6214	9040	12476	15982	19307	21945	22943	23787	24464	25031	26812	25493	25737	27193	27808	26194	27440	27880	27931	26542	27627	26818	28279
	25	1747	2712	4166	6240	8880	12136	15518	17054	18458	19665	20728	24212	21623	22114	25061	26430	23030	25611	26597	26714	23736	26030	24305	27529
	50	888	1395	2182	3366	5010	7316	10172	11682	13191	14604	15942	20728	17136	17824	22114	24395	19130	23030	24691	24899	20168	23736	21021	26364
	100	448	707	1115	1747	2661	4036	5935	7057	8271	9508	10779	15942	12003	12758	17824	21101	14245	19130	21570	21901	15489	20168	16548	24305
	200	225	356	564	889	1371	2120	3217	3908	4695	5549	6485	10779	7450	8085	12758	16552	9398	14245	17175	17621	10566	15489	11605	21021
	500	90	143	227	359	558	873	1351	1665	2035	2453	2937	5401	3465	3833	6827	9979	4635	8026	10603	11065	5400	9115	6120	14956
	1000	45	71	113	180	280	440	686	850	1045	1270	1534	2937	1829	2040	3833	5979	2510	4635	6454	6813	2974	5400	3423	10097
	2000	22	35	56	90	140	221	346	429	530	646	784	1534	940	1053	2040	3313	1309	2510	3615	3848	1566	2974	1819	6120
	5000	9	14	22	36	56	88	139	172	213	261	318	630	382	429	848	1416	537	1056	1557	1668	647	1266	756	2805
480 Volts	0	14401	14401	14401	14401	14401	14401	14401	14401	14401	14401	14401	14401	14401	14401	14401	14401	14401	14401	14401	14401	14401	14401	14401	14401
	5	9130	10746	11973	12805	13330	13685	13911	13987	14051	14101	14142	14270	14175	14192	14296	14337	14225	14312	14342	14345	14249	14325	14269	14368
	10	6288	8184	9955	11355	12317	12996	13436	13587	13711	13809	13890	14142	13955	13988	14192	14274	14052	14225	14283	14289	14101	14249	14139	14334
	25	3133	4549	6300	8161	9796	11151	12120	12467	12756	12984	13174	13766	13327	13408	13889	14086	13559	13968	14109	14125	13673	14028	13764	14236
	50	1685	2559	3791	5366	7082	8826	10295	10872	11367	11767	12106	13174	12383	12530	13408	13784	12805	13559	13829	13860	13015	13673	13182	14075
	100	873	1356	2083	3120	4440	6068	7759	8527	9229	9832	10364	12106	10811	11057	12530	13215	11515	12805	13298	13357	11868	13015	12152	13764
	200	444	697	1091	1683	2505	3658	5086	5841	6595	7302	7971	10364	8568	8912	11057	12197	9565	11515	12345	12449	10084	11868	10510	13182
	500	179	283	448	704	1077	1646	2451	2939	3477	4038	4628	7127	5210	5577	8113	9876	6311	8813	10139	10326	6937	9377	7478	11696
	1000	90	142	226	357	551	856	1308	1596	1928	2293	2700	4628	3127	3413	5577	7463	4013	6311	7788	8022	4557	6937	5048	9845
	2000	45	71	113	179	279	436	675	832	1017	1226	1468	2700	1732	1916	3413	4989	2317	4013	5301	5532	2700	4557	3060	7478
	5000	18	28	45	72	112	176	275	341	420	511	619	1195	739	826	1571	2489	1021	1913	2698	2856	1214	2243	1402	4343
600 Volts	0	11520	11520	11520	11520	11520	11520	11520	11520	11520	11520	11520	11520	11520	11520	11520	11520	11520	11520	11520	11520	11520	11520	11520	11520
	5	8572	9563	10251	10695	10968	11152	11268	11308	11340	11366	11387	11454	11404	11413	11467	11488	11430	11475	11490	11492	11443	11481	11453	11503
	10	6510	7933	9087	9904	10431	10791	11021	11099	11164	11214	11256	11387	11290	11307	11413	11455	11341	11430	11460	11463	11386	11443	11386	11486
	25	3602	4994	6511	7903	8970	9773	10312	10499	10654	10776	10877	11192	10958	11001	11255	11358	11081	11297	11370	11379	11141	11328	11189	11436
	50	2022	2994	4264	5718	7102	8329	9251	9590	9874	10099	10288	10877	10440	10521	11001	11200	10671	11081	11224	11240	10786	11141	10877	11352
	100	1070	1641	2469	3580	4870	6283	7564	8091	8552	8931	9256	10288	9523	9666	10521	10896	9933	10671	10941	10972	10138	10786	10301	11189
	200	550	858	1328	2016	2924	4107	5424	6057	6654	7182	7657	9256	8065	8291	9666	10331	8716	9933	10414	10472	9047	10138	9314	10877
	500	223	352	554	865	1311	1969	2852	3358	3894	4426	4959	7034	5460	5762	7734	8924	6348	8210	9089	9204	6830	8584	7235	10035
	1000	112	177	281	442	680	1047	1576	1904	2272	2665	3088	4959	3515	3791	5762	7249	4353	6348	7482	7648	4842	6830	5272	8889
	2000	56	89	141	223	346	539	829	1016	1233	1476	1750	3088	2042	2241	3791	5245	2665	4353	5509	5701	3057	4842	3417	7235
	5000	22	35	56	90	140	219	342	422	519	629	758	1437	902	1004	1860	2849	1229	2231	3061	3221	1450	2581	1662	4642

Copyright National Electrical Manufacturers Association
Provided by IHS under license with NEMA
No reproduction or networking permitted without license from IHS
Not for Resale

AB*1 75 ■ 2595512 0064670 3 ■

Table A-5

Symmetrical Three-phase Bolted Short-circuit Currents in Amperes at Various Distances From a Liquid-filled Transformer
Rated 300 kVA, Z = 4.50 Percent

Transformer Secondary Voltage	Distance, Feet	Wire Size of Copper Conductors																							
		14 AWG	12 AWG	10 AWG	8 AWG	6 AWG	4 AWG	2 AWG	1 AWG	1/0 AWG	2/0 AWG	3/0 AWG	Two 3/0 AWG	4/0 AWG	250 MCM	Two 250 MCM	Three 300 MCM	350 MCM	Two 350 MCM	Three 350 MCM	Three 400 MCM	500 MCM	Two 500 MCM	750 MCM	Four 750 MCM
208 Volts	0	20041	20041	20041	20041	20041	20041	20041	20041	20041	20041	20041	20041	20041	20041	20041	20041	20041	20041	20041	20041	20041	20041	20041	20041
	5	6694	9431	12376	14910	16656	17822	18517	18736	18915	19050	19160	19598	19247	19288	19660	19802	19374	19703	19815	19824	19442	19738	19495	19902
	10	3658	5509	7985	10824	13418	15537	16953	17418	17794	18078	18306	19160	18485	18568	19288	19568	18741	19374	19593	19611	18874	19442	18977	19765
	25	1529	2385	3680	5520	7806	10459	12923	13911	14755	15425	15973	17892	16406	16617	18221	18887	17025	18436	18949	18992	17332	18601	17568	19363
	50	774	1219	1913	2963	4419	6430	8804	9975	11085	12058	12915	15973	13627	13997	16617	17825	14692	17025	17946	18030	15215	17332	15616	18728
	100	389	615	973	1528	2335	3547	5200	6150	7152	8134	9096	12915	9971	10471	13997	15960	11422	14692	16181	16335	12165	15215	12748	17568
	200	195	309	490	775	1196	1854	2816	3416	4093	4815	5588	9096	6358	6842	10471	13080	7809	11422	13430	13675	8620	12165	9292	15616
	500	78	124	197	312	485	760	1177	1450	1772	2134	2549	4669	2996	3301	5814	8302	3954	6727	8740	9055	4557	7512	5099	11668
	1000	39	62	98	156	243	383	597	739	908	1103	1331	2549	1585	1764	3301	5088	2160	3954	5457	5732	2543	4557	2904	8176
	2000	19	31	49	78	122	192	300	373	460	560	680	1331	815	912	1764	2849	1130	2160	3098	3287	1348	2543	1559	5099
	5000	7	12	19	31	48	77	120	150	185	226	275	546	331	372	734	1224	465	913	1344	1437	559	1091	652	2389
240 Volts	0	18805	18805	18805	18805	18805	18805	18805	18805	18805	18805	18805	18805	18805	18805	18805	18805	18805	18805	18805	18805	18805	18805	18805	18805
	5	7404	10132	12822	14930	16283	17154	17665	17824	17956	18056	18137	18470	18202	18232	18516	18624	18297	18548	18633	18640	18348	18574	18388	18699
	10	4148	6157	8711	11420	13681	15391	16476	16823	17103	17315	17484	18137	17617	17679	18232	18445	17809	18297	18464	18477	17910	18348	17988	18594
	25	1755	2725	4169	6160	8507	11041	13202	14017	14697	15225	15651	17164	15986	16145	17410	17923	16460	17572	17969	18002	16698	17697	16880	18287
	50	891	1400	2191	3371	4970	7091	9444	10536	11536	12382	13106	15651	13694	13992	16145	17097	14554	16460	17189	17253	14975	16698	15296	17794
	100	449	709	1119	1753	2664	4010	5787	6770	7778	8734	9641	13106	10442	10884	13992	15608	11718	14554	15780	15901	12358	14975	12855	16880
	200	225	356	565	891	1374	2120	3195	3854	4586	5349	6148	9641	6924	7398	10884	13193	8331	11718	13483	13686	9093	12358	9712	15296
	500	90	143	227	360	558	874	1350	1660	2022	2426	2884	5183	3372	3700	6354	8822	4392	7259	9230	9522	5019	8018	5572	11897
	1000	45	71	113	180	280	441	686	849	1043	1264	1522	2884	1806	2005	3700	5594	2442	4392	5969	6245	2860	5019	3249	8647
	2000	22	35	56	90	140	221	346	429	529	644	781	1522	934	1045	2005	3203	1291	2442	3471	3673	1535	2860	1769	5572
	5000	9	14	22	36	56	88	139	172	213	261	317	628	381	428	842	1397	534	1044	1532	1636	641	1246	747	2687
480 Volts	0	9402	9402	9402	9402	9402	9402	9402	9402	9402	9402	9402	9402	9402	9402	9402	9402	9402	9402	9402	9402	9402	9402	9402	9402
	5	7549	8282	8728	8981	9121	9210	9265	9282	9297	9309	9318	9360	9326	9330	9366	9380	9338	9370	9381	9382	9344	9373	9349	9389
	10	5783	7023	7930	8492	8809	9007	9123	9160	9191	9215	9235	9318	9251	9258	9330	9357	9274	9338	9359	9361	9287	9344	9297	9376
	25	3106	4387	5775	6975	7803	8356	8684	8787	8871	8935	8986	9193	9027	9046	9222	9289	9086	9242	9295	9299	9118	9258	9143	9336
	50	1692	2553	3709	5043	6268	7272	7943	8163	8341	8475	8582	8986	8666	8705	9046	9178	8786	9086	9190	9198	8848	9118	8897	9271
	100	877	1362	2084	3080	4253	5520	6601	7008	7348	7612	7825	8582	7993	8072	8705	8961	8230	8786	8984	9001	8349	8848	8440	9143
	200	445	700	1095	1685	2485	3545	4722	5268	5768	6191	6553	7825	6847	6996	8072	8548	7277	8230	8594	8626	7487	8349	7648	8897
	500	179	284	449	706	1079	1641	2410	2853	3321	3781	4232	6030	4644	4878	6541	7469	5326	6869	7573	7645	5675	7115	5948	8228
	1000	90	142	226	357	552	857	1302	1581	1895	2231	2591	4232	2951	3177	4878	6107	3629	5326	6272	6388	4009	5675	4323	7303
	2000	45	71	113	180	279	437	675	830	1011	1213	1442	2591	1686	1850	3177	4411	2196	3629	4615	4761	2509	4009	2786	5948
	5000	18	28	45	72	112	176	275	341	419	509	615	1179	732	815	1528	2359	998	1831	2531	2659	1176	2112	1343	3801
600 Volts	0	7522	7522	7522	7522	7522	7522	7522	7522	7522	7522	7522	7522	7522	7522	7522	7522	7522	7522	7522	7522	7522	7522	7522	7522
	5	6621	6984	7195	7314	7381	7425	7452	7460	7468	7474	7479	7500	7483	7485	7503	7510	7489	7505	7511	7511	7492	7507	7495	7515
	10	5602	6339	6809	7079	7229	7323	7380	7398	7414	7426	7436	7479	7444	7447	7485	7498	7456	7489	7500	7501	7462	7492	7468	7508
	25	3481	4594	5588	6299	6729	7001	7160	7209	7250	7282	7308	7414	7328	7338	7429	7464	7358	7439	7467	7469	7375	7448	7388	7488
	50	2019	2936	4024	5075	5872	6436	6780	6889	6977	7044	7097	7308	7139	7159	7338	7406	7200	7358	7412	7417	7233	7375	7258	7454
	100	1075	1644	2445	3443	4456	5373	6034	6259	6441	6579	6690	7097	6776	6817	7159	7293	6899	7200	7305	7314	6963	7233	7011	7388
	200	552	862	1333	2005	2849	3842	4777	5155	5480	5738	5949	6690	6116	6197	6817	7074	6354	6899	7098	7115	6472	6963	6562	7258
	500	224	353	556	868	1310	1946	2749	3172	3591	3975	4325	5618	4626	4787	5918	6471	5089	6108	6528	6568	5318	6249	5494	6894
	1000	112	178	281	444	682	1046	1559	1866	2199	2538	2883	4325	3208	3401	4787	5631	3773	5089	5731	5801	4070	5318	4307	6358
	2000	56	89	141	224	347	540	827	1009	1219	1447	1697	2883	1953	2119	3401	4419	2457	3773	4566	4669	2749	4070	2997	5494
	5000	22	35	56	90	140	220	341	422	517	625	750	1404	887	982	1778	2624	1188	2088	2784	2899	1382	2362	1560	3885

Copyright National Electrical Manufacturers Association
Provided by IHS under license with NEMA
No reproduction or networking permitted without license from IHS
Not for Resale

AB*1 75 ■ 2595512 0064671 5 ■

Table A-6

Symmetrical Three-phase Bolted Short-circuit Currents in Amperes at Various Distances From a Liquid-filled Transformer
Rated 500 kVA, Z = 4.50 Percent

Transformer Secondary Voltage	Distance, Feet	Wire Size of Copper Conductors																							
		14 AWG	12 AWG	10 AWG	8 AWG	6 AWG	4 AWG	2 AWG	1 AWG	1/0 AWG	2/0 AWG	3/0 AWG	Two 3/0 AWG	4/0 AWG	250 MCM	Two 250 MCM	Three 300 MCM	350 MCM	Two 350 MCM	Three 350 MCM	Three 400 MCM	500 MCM	Two 500 MCM	750 MCM	Four 750 MCM
208 Volts	0	33273	33273	33273	33273	33273	33273	33273	33273	33273	33273	33273	33273	33273	33273	33273	33273	33273	33273	33273	33273	33273	33273	33273	33273
	5	7226	10756	15274	20103	24153	27215	29148	29762	30258	30629	30926	32089	31160	31266	32252	32631	31493	32365	32664	32687	31670	32455	31806	32895
	10	3780	5839	8844	12831	17252	21654	25100	26326	27329	28093	28704	30926	29181	29404	31266	32006	29853	31493	32071	32117	30194	31670	30455	32524
	25	1546	2432	3807	5868	8669	12408	16580	18525	20308	21815	23105	27656	24152	24679	28528	30224	25674	29082	30385	30498	26417	29500	26983	31458
	50	778	1230	1942	3044	4633	6987	10108	11842	13624	15319	16929	23105	18350	19135	24679	27562	20614	25674	27867	28079	21747	26417	22622	29820
	100	390	618	980	1547	2385	3685	5561	6714	7997	9339	10745	16929	12115	12951	19135	23247	14598	20614	23762	24121	15944	21747	17035	26983
	200	195	309	492	779	1208	1887	2906	3563	4326	5169	6113	10745	7101	7754	12951	17457	9113	14598	18154	18648	10316	15944	11356	22622
	500	78	124	197	313	487	765	1191	1474	1810	2194	2643	5019	3138	3485	6446	9769	4247	7659	10428	10914	4976	8757	5655	15148
	1000	39	62	98	156	244	384	600	745	918	1118	1356	2643	1622	1813	3485	5577	2242	4247	6044	6398	2666	4976	3074	9726
	2000	19	31	49	78	122	192	301	374	462	564	686	1356	824	925	1813	2991	1152	2242	3272	3490	1382	2666	1607	5655
	5000	7	12	19	31	48	77	120	150	185	227	276	550	333	374	743	1249	468	927	1375	1474	565	1113	680	2503
240 Volts	0	31235	31235	31235	31235	31235	31235	31235	31235	31235	31235	31235	31235	31235	31235	31235	31235	31235	31235	31235	31235	31235	31235	31235	31235
	5	8157	11926	16459	20894	24287	26683	28134	28586	28953	29228	29448	30336	29622	29701	30457	30746	29872	30542	30771	30788	30005	30610	30109	30946
	10	4323	6628	9901	14031	18280	22161	24966	25917	26686	27266	27728	29448	28087	28253	29701	30268	28594	29872	30316	30351	28855	30005	29056	30662
	25	1779	2791	4353	6654	9692	13552	17560	19312	20862	22130	23187	26902	24031	24445	27562	28889	25235	27986	29010	29097	25825	28308	26273	29839
	50	897	1416	2232	3487	5275	7864	11162	12916	14660	16262	17732	23187	18993	19667	24445	26782	20930	25235	27017	27182	21885	25825	22815	28554
	100	450	712	1129	1779	2736	4205	6289	7539	8905	10299	11722	17732	13070	13868	19667	23223	15415	20930	23641	23932	16649	21885	17631	26273
	200	225	357	567	898	1391	2167	3322	4060	4908	5833	6852	11722	7900	8579	13868	18116	9968	15415	18731	19162	11168	16649	12185	22615
	500	90	143	227	361	561	881	1370	1692	2075	2510	3015	5659	3567	3951	7186	10656	4785	8453	11312	11789	5572	9575	6294	15867
	1000	45	71	113	180	281	442	691	857	1056	1285	1555	3015	1858	2074	3951	6241	2555	4785	6737	7111	3028	5572	3479	10546
	2000	22	35	57	90	141	222	347	431	532	650	790	1555	948	1062	2074	3396	1321	2555	3708	3947	1581	3028	1835	6294
	5000	9	14	22	36	56	88	139	173	214	261	318	634	383	431	854	1431	539	1064	1575	1687	649	1276	759	2843
480 Volts	0	15617	15617	15617	15617	15617	15617	15617	15617	15617	15617	15617	15617	15617	15617	15617	15617	15617	15617	15617	15617	15617	15617	15617	15617
	5	10584	12443	13702	14442	14849	15101	15250	15296	15336	15367	15392	15505	15413	15422	15519	15556	15443	15530	15559	15561	15460	15538	15473	15581
	10	7094	9428	11537	13052	13966	14536	14865	14966	15051	15115	15168	15392	15210	15228	15422	15495	15271	15443	15501	15505	15305	15460	15331	15545
	25	3344	4987	7100	9374	11291	12746	13664	13955	14189	14365	14505	15056	14615	14665	15133	15313	14772	15186	15328	15339	14855	15228	14919	15437
	50	1747	2700	4096	5957	8031	10108	11741	12323	12799	13162	13451	14505	13676	13781	14665	15016	13993	14772	15046	15068	14154	14855	14277	15261
	100	889	1395	2176	3327	4846	6776	8780	9656	10431	11065	11593	13451	12015	12222	13781	14444	12617	13993	14505	14548	12912	14154	13136	14919
	200	448	708	1116	1743	2637	3932	5581	6458	7330	8131	8866	11593	9496	9833	12222	13391	10465	12617	13508	13591	10942	12912	11307	14277
	500	180	285	452	714	1102	1703	2573	3108	3705	4330	4986	7883	5627	6018	8922	10863	6790	9620	11106	11276	7421	10153	7933	12629
	1000	90	143	227	359	558	871	1342	1647	2000	2391	2829	4986	3289	3593	6018	8133	4226	6790	8461	8693	4787	7421	5273	10565
	2000	45	71	113	180	280	440	685	846	1037	1255	1507	2829	1783	1975	3593	5328	2392	4226	5656	5894	2786	4787	3147	7933
	5000	18	28	45	72	112	177	277	343	424	516	626	1221	749	837	1611	2581	1036	1964	2798	2963	1232	2303	1421	4512
600 Volts	0	12494	12494	12494	12494	12494	12494	12494	12494	12494	12494	12494	12494	12494	12494	12494	12494	12494	12494	12494	12494	12494	12494	12494	12494
	5	9935	10958	11578	11925	12115	12235	12307	12330	12350	12366	12378	12436	12389	12393	12443	12462	12404	12449	12464	12465	12413	12453	12420	12475
	10	7501	9204	10467	11249	11687	11957	12115	12164	12205	12237	12263	12378	12284	12294	12393	12431	12315	12404	12434	12436	12333	12413	12346	12457
	25	3947	5628	7491	9139	10290	11058	11511	11651	11765	11851	11920	12206	11975	12000	12244	12337	12055	12271	12345	12350	12098	12293	12131	12401
	50	2132	3233	4735	6505	8167	9553	10484	10788	11032	11216	11362	11920	11476	11528	12000	12183	11638	12055	12198	12210	11722	12098	11787	12310
	100	1101	1713	2632	3915	5455	7152	8628	9190	9659	10023	10316	11362	10545	10653	11528	11882	10867	11638	11913	11935	11028	11722	11151	12131
	200	558	878	1376	2124	3147	4525	6083	6818	7495	8071	8585	10316	8968	9171	10653	11310	9554	10867	11372	11415	9839	11028	10056	11787
	500	224	355	563	885	1356	2069	3054	3627	4238	4842	5440	7854	5988	6303	8549	9819	6902	8994	9961	10059	7371	9328	7737	10857
	1000	112	178	283	448	692	1075	1639	1993	2395	2827	3292	5440	3760	4055	6303	7958	4649	6902	8181	8337	5149	7371	5563	9582
	2000	56	89	142	225	349	547	846	1042	1270	1527	1818	3292	2129	2340	4055	5680	2785	4649	5952	6146	3190	5149	3548	7737
	5000	22	35	56	90	140	221	345	427	525	638	771	1484	919	1024	1928	2995	1256	2317	3217	3383	1482	2677	1695	4874

Copyright National Electrical Manufacturers Association
Provided by IHS under license with NEMA
No reproduction or networking permitted without license from IHS

Not for Resale

AB*1 75 ■ 2595512 0064672 7 ■

Table A-7

Symmetrical Three-phase Bolted Short-circuit Currents in Amperes at Various Distances From a Liquid-filled Transformer
Rated 750 kVA, Z = 5.32 Percent

Transformer Secondary Voltage	Distance, Feet	Wire Size of Copper Conductors																							
		14 AWG	12 AWG	10 AWG	8 AWG	6 AWG	4 AWG	2 AWG	1 AWG	1/0 AWG	2/0 AWG	3/0 AWG	Two 3/0 AWG	4/0 AWG	250 MCM	Two 250 MCM	Three 300 MCM	350 MCM	Two 350 MCM	Three 350 MCM	Three 400 MCM	500 MCM	Two 500 MCM	750 MCM	Four 750 MCM
208 Volts	0	42763	42763	42763	42763	42763	42763	42763	42763	42763	42763	42763	42763	42763	42763	42763	42763	42763	42763	42763	42763	42763	42763	42763
	5	7457	11346	16672	22935	28735	33434	36471	37425	38183	38742	39179	40964	39517	39664	41187	41766	39986	41344	41810	41843	40236	41469	40428	42157
	10	3834	5982	9220	13758	19209	25172	30243	32119	33661	34834	35762	39179	36475	36798	39664	40794	37452	39986	40885	40950	37943	40236	38313	41566
	25	1555	2453	3864	6019	9048	13311	18451	21013	23450	25577	27436	34162	28963	29733	35463	38039	31178	36274	38270	38433	32244	36877	33042	39880
	50	780	1235	1956	3081	4727	7229	10695	12712	14855	16970	19047	27436	20935	22000	29733	33990	24021	31178	34433	34742	25576	32244	26770	37330
	100	391	619	983	1556	2408	3745	5717	6958	8368	9880	11507	19047	13137	14159	22000	27679	16204	24021	28412	28921	17907	25576	19297	33042
	200	195	310	493	781	1214	1902	2945	3626	4425	5320	6337	11507	7423	8154	14159	19812	9700	16204	20734	21390	11096	17907	12319	26770
	500	78	124	197	313	488	767	1197	1484	1826	2219	2682	5167	3196	3561	6716	10438	4367	8065	11208	11781	5148	9310	5883	16913
	1000	39	62	98	156	244	384	601	747	922	1125	1365	2682	1637	1833	3561	5782	2274	4367	6292	6681	2714	5148	3140	10424
	2000	19	31	49	78	122	192	301	375	463	566	689	1365	828	930	1833	3047	1161	2274	3342	3571	1394	2714	1625	5883
	5000	7	12	19	31	48	77	120	150	185	227	277	552	333	375	746	1258	470	932	1387	1488	567	1122	663	2547
240 Volts	0	40669	40669	40669	40669	40669	40669	40669	40669	40669	40669	40669	40669	40669	40669	40669	40669	40669	40669	40669	40669	40669	40669	40669	40669
	5	8488	12757	18342	24437	29592	33446	35805	36527	37103	37526	37859	39262	38117	38228	39432	39887	38478	39554	39921	39947	38674	39652	38824	40194
	10	4401	6834	10436	15307	20823	26394	30743	32263	33491	34410	35132	37859	35685	35932	38228	39120	36443	38478	39191	39242	36831	38674	37124	39728
	25	1791	2822	4434	6870	10227	14787	19970	22406	24643	26526	28124	33830	29406	30036	34845	36924	31226	35484	37104	37232	32103	35963	32757	38386
	50	900	1423	2252	3538	5408	8206	11973	14092	16284	18379	20372	28124	22130	23090	30036	33613	24895	31226	33968	34215	26259	32103	27296	36324
	100	451	714	1133	1791	2768	4290	6508	7882	9420	11039	12745	20372	14412	15430	23090	28212	17433	24895	28831	29261	19061	26259	20365	32757
	200	225	357	568	901	1398	2187	3377	4149	5047	6045	7165	12745	8344	9125	15430	20981	10753	17433	21830	22429	12192	19061	13430	27296
	500	90	143	227	361	562	884	1378	1707	2098	2546	3070	5867	3650	4058	7560	11548	4953	9005	12341	12925	5811	10314	6608	18048
	1000	45	71	114	180	281	443	693	861	1062	1294	1570	3070	1879	2102	4058	6526	2601	4953	7080	7499	3096	5811	3572	11465
	2000	22	35	57	90	141	222	348	432	534	652	793	1570	953	1070	2102	3477	1333	2601	3807	4062	1600	3096	1861	6608
	5000	9	14	22	36	56	88	139	173	214	262	319	636	384	432	859	1445	541	1072	1592	1707	652	1288	763	2905
480 Volts	0	20334	20334	20334	20334	20334	20334	20334	20334	20334	20334	20334	20334	20334	20334	20334	20334	20334	20334	20334	20334	20334	20334	20334	20334
	5	12388	15230	17289	18515	19172	19562	19782	19848	19905	19948	19983	20159	20012	20023	20178	20236	20053	20193	20240	20243	20078	20205	20097	20275
	10	7731	10761	13823	16229	17734	18663	19181	19334	19461	19555	19631	19983	19691	19716	20023	20138	19777	20053	20146	20153	19826	20078	19864	20215
	25	3448	5256	7748	10708	13487	15766	17252	17721	18093	18367	18582	19455	18748	18819	19564	19847	18977	19640	19868	19884	19099	19702	19193	20038
	50	1771	2765	4267	6383	8946	11782	14225	15137	15888	16461	16915	18582	17264	17422	18819	19372	17742	18977	19416	19448	17981	19099	18162	19749
	100	895	1411	2217	3435	5113	7393	9985	11203	12321	13263	14062	16915	14703	15018	17422	18462	15613	17742	18552	18616	16051	17981	16378	19193
	200	450	711	1126	1769	2704	4103	5986	7046	8142	9189	10186	14062	11065	11545	15018	16806	12447	15613	16984	17107	13129	16051	13648	18162
	500	180	285	454	718	1112	1730	2643	3220	3876	4581	5342	8889	6108	6589	10296	13014	7555	11264	13368	13614	8362	12011	9024	15604
	1000	90	143	227	360	560	878	1360	1675	2045	2461	2933	5342	3438	3780	6589	9260	4502	7555	9699	10012	5157	8362	5732	12585
	2000	45	71	113	180	281	442	689	853	1049	1273	1535	2933	1825	2029	3780	5774	2476	4502	6170	6462	2905	5157	3304	9024
	5000	18	28	45	72	112	177	277	345	425	519	630	1239	756	847	1646	2677	1051	2020	2914	3096	1254	2383	1452	4844
600 Volts	0	16267	16267	16267	16267	16267	16267	16267	16267	16267	16267	16267	16267	16267	16267	16267	16267	16267	16267	16267	16267	16267	16267	16267	16267
	5	12149	13822	14853	15414	15708	15887	15990	16021	16049	16070	16088	16178	16102	16108	16188	16217	16123	16195	16219	16221	16135	16201	16145	16237
	10	8548	11013	13017	14311	15029	15456	15694	15765	15825	15870	15907	16088	15937	15949	16108	16167	15980	16123	16171	16174	16005	16135	16025	16206
	25	4155	6129	8544	10932	12749	14003	14737	14957	15133	15264	15367	15817	15448	15482	15871	16017	15561	15909	16028	16036	15624	15941	15672	16115
	50	2182	3364	5065	7245	9520	11602	13085	13575	13966	14255	14482	15367	14656	14732	15482	15770	14895	15561	15792	15808	15020	15624	15115	15965
	100	1112	1744	2715	4127	5942	8134	10236	11087	11811	12379	12837	14482	13192	13357	14732	15289	13681	14895	15335	15367	13922	15020	14102	15672
	200	561	885	1395	2176	3279	4845	6761	7730	8662	9482	10206	12837	10804	11108	13357	14381	11677	13681	14473	14538	12098	13922	12412	15115
	500	225	356	565	893	1376	2123	3190	3835	4543	5270	6013	9193	6718	7134	10202	12077	7937	10853	12288	12434	8573	11338	9072	13641
	1000	112	178	284	449	697	1088	1673	2049	2481	2955	3479	6013	4019	4369	7134	9371	5086	7937	9688	9910	5703	8573	6223	11703
	2000	56	89	142	225	350	550	855	1056	1293	1561	1870	3479	2206	2436	4369	6348	2932	5086	6699	6952	3391	5703	3804	9072
	5000	22	35	57	90	140	221	346	429	529	644	780	1518	933	1042	1993	3162	1284	2417	3416	3607	1523	2817	1751	5372

Copyright National Electrical Manufacturers Association
Provided by IHS under license with NEMA
No reproduction or networking permitted without license from IHS

Not for Resale

AB*1 75 2595512 0064673 9

Table A-8

Symmetrical Three-phase Bolted Short-circuit Currents in Amperes at Various Distances From a Liquid-filled Transformer
Rated 1000 kVA, Z = 5.32 Percent

Transformer Secondary Voltage	Distance, Feet	Wire Size of Copper Conductors																							
		14 AWG	12 AWG	10 AWG	8 AWG	6 AWG	4 AWG	2 AWG	1 AWG	1/0 AWG	2/0 AWG	3/0 AWG	Two 3/0 AWG	4/0 AWG	250 MCM	Two 250 MCM	Three 300 MCM	350 MCM	Two 350 MCM	Three 350 MCM	Three 400 MCM	500 MCM	Two 500 MCM	750 MCM	Four 750 MCM
208 Volts	0	56787	56787	56787	56787	56787	56787	56787	56787	56787	56787	56787	56787	56787	56787	56787	56787	56787	56787	56787	56787	56787	56787	56787	56787
	5	7574	11683	17607	25222	33185	40485	45680	47393	48758	49767	50555	53648	51159	51422	54043	55048	51987	54317	55125	55181	52419	54534	52747	55726
	10	3859	6053	9425	14341	20669	28330	35692	38675	41211	43199	44798	50555	46037	46611	51422	53367	47737	51987	53525	53638	48573	52419	49198	54700
	25	1558	2462	3891	6097	9266	13910	19914	23137	26359	29322	32034	42202	34346	35562	44430	48695	37835	45808	49094	49374	39527	46825	40797	51817
	50	781	1237	1962	3098	4775	7368	11078	13326	15793	18325	20919	32034	23379	24830	35562	42123	27635	37835	42859	43369	29854	39527	31593	47583
	100	391	620	985	1560	2419	3776	5808	7111	8615	10263	12086	20919	13967	15186	24830	32650	17683	27635	33758	34532	19835	29854	21642	40797
	200	195	310	493	782	1216	1909	2966	3663	4485	5418	6492	12086	7658	8460	15186	22087	10183	17683	23311	24193	11780	19835	13216	31593
	500	78	124	197	313	488	768	1201	1489	1835	2235	2707	5267	3236	3614	6918	10984	4457	8391	11868	12532	5286	9782	6076	18676
	1000	39	62	98	156	244	385	602	748	924	1128	1372	2707	1647	1847	3614	5937	2298	4457	6485	6907	2751	5286	3194	11055
	2000	19	31	49	78	122	192	301	375	464	567	690	1372	831	933	1847	3089	1167	2298	3395	3633	1404	2751	1639	6076
	5000	7	12	19	31	48	77	120	150	186	227	277	553	334	375	748	1265	471	936	1396	1499	568	1128	666	2582
240 Volts	0	54026	54026	54026	54026	54026	54026	54026	54026	54026	54026	54026	54026	54026	54026	54026	54026	54026	54026	54026	54026	54026	54026	54026	54026
	5	8661	13248	19654	27426	34917	41210	45379	46701	47750	48521	49123	51566	49586	49786	51868	52659	50224	52080	52719	52763	50563	52250	50822	53192
	10	4437	6937	10735	16138	22793	30327	36981	39507	41599	43201	44471	49123	45447	45891	49786	51329	46780	50224	51451	51540	47445	50563	47944	52381
	25	1796	2835	4472	6982	10541	15625	21908	25119	28222	30973	33410	42313	35431	36461	44087	47575	38388	45188	47889	48110	39811	46005	40874	50074
	50	901	1426	2260	3563	5477	8405	12510	14934	17539	20143	22736	33410	25123	26489	36461	42117	29092	38388	42716	43132	31107	39811	32662	46614
	100	451	715	1135	1797	2784	4336	6638	8097	9764	11565	13523	22736	15503	16757	26489	33792	19286	29092	34759	35431	21413	31107	23164	40874
	200	225	358	569	902	1402	2198	3408	4200	5133	6181	7379	13523	8665	9537	16757	23753	11391	19286	24924	25760	13079	21413	14570	32662
	500	90	143	227	361	563	886	1383	1715	2111	2568	3106	6006	3705	4132	7835	12269	5077	9441	13202	13898	5997	10935	6867	20198
	1000	45	71	114	181	282	444	694	863	1065	1299	1578	3106	1893	2121	4132	6737	2634	5077	7341	7803	3147	5997	3646	12280
	2000	22	35	57	90	141	222	348	432	534	653	795	1578	957	1075	2121	3534	1342	2634	3879	4147	1613	3147	1880	6867
	5000	9	14	22	36	56	89	139	173	214	262	319	637	385	433	862	1455	543	1077	1604	1722	655	1297	766	2953
480 Volts	0	27013	27013	27013	27013	27013	27013	27013	27013	27013	27013	27013	27013	27013	27013	27013	27013	27013	27013	27013	27013	27013	27013	27013	27013
	5	13890	18024	21437	23662	24899	25632	26038	26158	26260	26336	26399	26706	26449	26469	26740	26840	26521	26765	26848	26853	26563	26786	26596	26908
	10	8134	11771	15927	19678	22293	23995	24960	25245	25476	25647	25783	26399	25889	25934	26469	26669	26040	26521	26684	26694	26125	26563	26190	26803
	25	3500	5405	8164	11739	15522	19037	21568	22409	23079	23575	23962	25475	24259	24388	25670	26161	24665	25804	26199	26226	24876	25910	25037	26493
	50	1782	2796	4358	6642	9601	13217	16736	18177	19407	20375	21156	23962	21762	22043	24388	25339	22594	24665	25416	25471	23002	24876	23307	25991
	100	898	1417	2236	3491	5270	7812	10954	12559	14111	15486	16705	21156	17715	18230	22043	23787	19194	22594	23944	24055	19905	23002	20437	25037
	200	450	713	1130	1781	2738	4202	6255	7467	8769	10071	11368	16705	12561	13244	18230	21058	14546	19194	21358	21566	15553	19905	16331	23307
	500	180	286	454	720	1117	1744	2684	3288	3986	4753	5603	9738	6482	7054	11592	15315	8228	12928	15848	16221	9243	13989	10099	19238
	1000	90	143	227	361	561	881	1370	1692	2072	2504	3003	5603	3544	3917	7054	10299	4720	8228	10879	11298	5467	9243	6140	14822
	2000	45	71	113	180	281	443	691	857	1055	1284	1553	3003	1852	2066	3917	6134	2538	4720	6601	6949	2998	5467	3433	10099
	5000	18	28	45	72	112	177	278	345	426	521	633	1250	760	853	1670	2747	1061	2061	3001	3197	1271	2445	1476	5130
600 Volts	0	21610	21610	21610	21610	21610	21610	21610	21610	21610	21610	21610	21610	21610	21610	21610	21610	21610	21610	21610	21610	21610	21610	21610	21610
	5	14355	17121	18986	20047	20604	20935	21123	21179	21228	21265	21296	21453	21321	21331	21470	21522	21357	21483	21526	21528	21379	21494	21396	21556
	10	9333	12661	15769	18021	19352	20153	20595	20725	20834	20915	20981	21296	21033	21054	21331	21434	21108	21357	21441	21447	21151	21379	21185	21502
	25	4269	6448	9344	12585	15401	17551	18881	19289	19613	19851	20037	20823	20182	20243	20917	21171	20382	20985	21191	21205	20491	21039	20574	21343
	50	2206	3432	5261	7766	10661	13658	16056	16905	17592	18108	18513	20037	18823	18961	20243	20742	19246	20382	20781	20809	19461	20491	19623	21081
	100	1117	1759	2756	4249	6264	8903	11737	12999	14123	15041	15802	18513	16402	16689	18961	19913	17239	19246	19993	20050	17643	19461	17945	20574
	200	562	888	1404	2202	3352	5048	7266	8471	9687	10815	11858	15802	12754	13230	16689	18379	14119	17239	18539	18650	14783	17643	15282	19623
	500	225	357	567	896	1386	2152	3272	3970	4755	5587	6470	10465	7339	7874	11929	14704	8931	12907	15044	15280	9796	13650	10492	17201
	1000	112	178	284	450	699	1095	1693	2081	2535	3040	3610	6470	4213	4614	7874	10806	5454	8931	11263	11585	6201	9796	6847	14214
	2000	56	89	142	225	351	552	860	1063	1306	1582	1905	3610	2258	2506	4614	6933	3045	5454	7377	7700	3555	6201	4024	10492
	5000	22	35	57	90	140	221	347	430	531	648	786	1540	941	1053	2038	3289	1305	2492	3572	3787	1554	2928	1795	5828

Copyright National Electrical Manufacturers Association
Provided by IHS under license with NEMA
No reproduction or networking permitted without license from IHS

Not for Resale

AB*1 75 ■ 2595512 0006474 0 ■

Table A-9

Symmetrical Three-phase Bolted Short-circuit Currents in Amperes at Various Distances From a Liquid-filled Transformer

Rated 1500 kVA, Z = 5.32 Percent

Transformer Secondary Voltage	Distance, Feet	Wire Size of Copper Conductors																						
		14 AWG	12 AWG	10 AWG	8 AWG	6 AWG	4 AWG	2 AWG	1 AWG	1/0 AWG	2/0 AWG	3/0 AWG	Two 3/0 AWG	4/0 AWG	250 MCM	Two 250 MCM	Three 300 MCM	350 MCM	Two 350 MCM	Three 350 MCM	Three 400 MCM	500 MCM	Two 500 MCM	750 MCM	Four 750 MCM
208 Volts	0	84472	84472	84472	84472	84472	84472	84472	84472	84472	84472	84472	84472	84472	84472	84472	84472	84472	84472	84472	84472	84472	84472	84472
	5	7680	11990	18493	27611	38542	50427	60415	64063	67042	69290	71056	77645	72404	73006	78536	80697	74234	79133	80863	80984	75155	79597	75846	82157
	10	3882	6118	9612	14888	22136	31909	42859	47925	52624	56353	59567	71056	62121	63356	73006	77107	65698	74234	77451	77694	67417	75155	68691	79952
	25	1561	2471	3916	6168	9469	14488	21442	25483	29770	33990	38117	54766	41853	43947	59221	67522	47908	62002	68365	68951	50936	64046	53246	73933
	50	782	1239	1968	3114	4820	7499	11452	13941	16765	19792	23046	38117	26298	28329	43947	55151	32383	47908	56571	57555	35744	50936	38472	65563
	100	391	620	986	1563	2429	3806	5896	7260	8859	10652	12689	23046	14859	16320	28329	39579	19402	32383	41394	42680	22177	35744	24600	53246
	200	195	310	493	783	1219	1916	2987	3698	4545	5515	6648	12689	7899	8777	16320	24842	10702	19402	26515	27743	12541	22177	14242	38472
	500	78	124	197	313	488	769	1204	1495	1845	2250	2732	5367	3276	3668	7125	11570	4550	8736	12588	13364	5429	10296	6280	20823
	1000	39	62	98	156	244	385	603	750	926	1132	1378	2732	1657	1861	3668	6097	2322	4550	6687	7144	2789	5429	3249	11760
	2000	19	31	49	78	122	192	302	375	464	568	692	1378	833	937	1861	3130	1173	2322	3448	3696	1414	2789	1653	6280
	5000	7	12	19	31	48	77	120	150	186	227	277	554	334	376	750	1272	472	940	1405	1509	570	1134	668	2617
240 Volts	0	80426	80426	80426	80426	80426	80426	80426	80426	80426	80426	80426	80426	80426	80426	80426	80426	80426	80426	80426	80426	80426	80426	80426	80426
	5	8816	13699	20933	30715	41754	52821	61356	64300	66664	68421	69793	75054	70839	71297	75735	77446	72259	76199	77576	77671	72988	76564	73537	78599
	10	4470	7031	11008	16930	24849	35040	45679	50290	54334	57590	60257	69793	62342	63324	71297	74586	65215	72259	74854	75045	66608	72988	67642	76844
	25	1800	2848	4507	7086	10834	16449	24003	28244	32622	36796	40748	56099	44217	46099	59798	66769	49628	62085	67443	67912	52283	63764	54284	71978
	50	902	1429	2268	3586	5542	8593	13039	15793	18874	22113	25520	40748	28843	30862	46099	56189	34827	49628	57387	58215	38035	52283	40589	65009
	100	451	715	1137	1802	2798	4378	6762	8307	10107	12104	14347	25520	16703	18262	30862	41896	21505	34827	43564	44737	24365	38035	26814	54284
	200	225	358	569	903	1405	2208	3437	4251	5216	6317	7596	14347	8997	9972	18262	27234	12089	21505	28914	30135	14084	24365	15905	40589
	500	90	143	228	362	563	887	1388	1722	2124	2589	3141	6145	3761	4206	8120	13058	5204	9909	14163	15000	6193	11621	7143	22899
	1000	45	71	114	181	282	444	696	865	1068	1305	1587	3141	1907	2140	4206	6957	2668	5204	7616	8125	3200	6193	3722	13209
	2000	22	35	57	90	141	222	348	433	535	655	798	1587	960	1079	2140	3591	1350	2668	3952	4234	1626	3200	1900	7143
	5000	9	14	22	36	56	89	139	173	214	262	320	639	385	434	865	1464	544	1083	1616	1736	657	1305	770	3002
480 Volts	0	40213	40213	40213	40213	40213	40213	40213	40213	40213	40213	40213	40213	40213	40213	40213	40213	40213	40213	40213	40213	40213	40213	40213	40213
	5	15517	21588	27679	32400	35305	37072	38042	38325	38559	38732	38871	39544	38982	39026	39616	39835	39138	39671	39850	39862	39229	39716	39299	39981
	10	8510	12799	18403	24488	29580	33335	35597	36278	36820	37217	37527	38871	37767	37867	39026	39460	38099	39138	39492	39516	38282	39229	38422	39751
	25	3547	5541	8557	12806	17945	23602	28424	30204	31661	32765	33633	36859	34297	34594	37299	38359	35197	37593	38442	38501	35650	37822	35989	39077
	50	1792	2825	4440	6884	10254	14828	20007	22427	24638	26489	28049	33633	29294	29899	34594	36601	31042	35197	36770	36890	31882	35650	32504	37996
	100	900	1424	2253	3543	5417	8224	12001	14122	16311	18398	20374	28049	22108	23049	29899	33384	24814	31042	33721	33956	26141	31882	27142	35989
	200	451	714	1134	1793	2771	4296	6519	7896	9437	11056	12760	20374	14421	15431	23049	28094	17413	24814	28693	29107	19017	26141	20294	32504
	500	180	286	455	721	1121	1757	2723	3354	4095	4927	5873	10699	6883	7565	13184	18502	9006	15101	19368	19984	10309	16697	11449	25047
	1000	90	143	227	361	562	884	1379	1708	2099	2548	3072	5873	3652	4060	7565	11550	4954	9006	12338	12918	5810	10309	6604	17997
	2000	45	71	114	181	281	443	694	861	1062	1294	1570	3072	1880	2103	4060	6529	2602	4954	7081	7500	3096	5810	3571	11449
	5000	18	28	45	72	112	177	278	346	427	522	636	1261	765	859	1694	2818	1072	2102	3092	3304	1288	2510	1501	5448
600 Volts	0	32170	32170	32170	32170	32170	32170	32170	32170	32170	32170	32170	32170	32170	32170	32170	32170	32170	32170	32170	32170	32170	32170	32170	32170
	5	17150	22054	25991	28491	29855	30655	31095	31224	31334	31417	31484	31828	31539	31560	31864	31976	31617	31892	31984	31990	31663	31915	31699	32051
	10	10128	14584	19578	23964	26939	28839	29899	30210	30462	30648	30795	31484	30911	30959	31560	31784	31075	31617	31800	31812	31168	31663	31240	31933
	25	4373	6746	10162	14537	19077	23192	26080	27022	27770	28320	28747	30451	29074	29215	30662	31213	29520	30808	31254	31284	29754	30925	29931	31583
	50	2227	3494	5442	8278	11921	16306	20479	22152	23568	24670	25553	28747	26233	26545	29215	30286	27161	29520	30371	30432	27617	29754	27957	31015
	100	1122	1772	2794	4360	6574	9717	13553	15486	17336	18959	20381	25553	21549	22138	26545	28528	23239	27161	28702	28824	24049	27617	24651	29931
	200	563	891	1412	2226	3421	5244	7788	9279	10872	12454	14014	20381	15439	16246	22138	25405	17776	23239	25742	25976	18952	24049	19853	27957
	500	225	357	568	900	1396	2179	3351	4103	4970	5919	6967	12039	8046	8744	14262	18698	10170	15848	19318	19751	11394	17097	12418	23258
	1000	112	179	284	451	702	1101	1712	2113	2588	3125	3745	6967	4415	4876	8744	12692	5866	10170	13386	13886	6781	11394	7601	18070
	2000	56	89	142	226	352	553	864	1071	1319	1604	1939	3745	2312	2577	4876	7610	3163	5866	8180	8603	3733	6781	4269	12418
	5000	22	35	57	90	141	222	347	432	533	651	791	1562	950	1065	2084	3423	1325	2570	3738	3981	1586	3047	1841	6362

Copyright National Electrical Manufacturers Association
Provided by IHS under license with NEMA
No reproduction or networking permitted without license from IHS
Not for Resale

AB*1 75 ■ 2595512 0064675 2 ■

Table A-10

Symmetrical Three-phase Bolted Short-circuit Currents in Amperes at Various Distances From a Liquid-filled Transformer

Rated 2000 kVA, Z = 5.32 Percent

Transformer Secondary Voltage	Distance, Feet	Wire Size of Copper Conductors																							
		14 AWG	12 AWG	10 AWG	8 AWG	6 AWG	4 AWG	2 AWG	1 AWG	1/0 AWG	2/0 AWG	3/0 AWG	Two 3/0 AWG	4/0 AWG	250 MCM	Two 250 MCM	Three 300 MCM	350 MCM	Two 350 MCM	Three 350 MCM	Three 400 MCM	500 MCM	Two 500 MCM	750 MCM	Four 750 MCM
208 Volts	0	111710	111710	111710	111710	111710	111710	111710	111710	111710	111710	111710	111710	111710	111710	111710	111710	111710	111710	111710	111710	111710	111710	111710	111710
	5	7729	12130	18903	28785	41492	56805	71359	77175	82082	85890	88927	99969	91260	92321	101546	105226	94419	102576	105512	105717	95972	103366	97124	107714
	10	3893	6147	9698	15141	22844	33797	47182	53926	60373	66018	70955	88927	74999	77026	92321	99159	80818	94419	99749	100163	83599	95972	85656	103964
	25	1563	2475	3927	6202	9565	14765	22210	26715	31654	36713	41876	63965	46751	49608	70814	83587	55110	75185	84981	85944	59432	78417	62790	94002
	50	782	1240	1970	3121	4842	7561	11633	14245	17259	20560	24206	41876	27959	30384	49608	65045	35339	55110	67189	68684	39588	59432	43134	80820
	100	391	620	987	1565	2434	3821	5938	7332	8980	10847	12998	24206	15329	16930	30384	44127	20367	35339	46539	48271	23544	39588	26388	62790
	200	195	310	493	784	1220	1920	2998	3716	4575	5563	6727	12998	8022	8941	16930	26436	10977	20367	28414	29885	12953	23544	14813	43134
	500	78	124	197	313	489	770	1205	1498	1849	2258	2745	5418	3296	3695	7232	11879	4597	8916	12974	13815	5503	10570	6387	22081
	1000	39	62	98	156	244	385	603	750	928	1134	1381	2745	1662	1867	3695	6179	2334	4597	6791	7267	2808	5503	3277	12144
	2000	19	31	49	78	122	192	302	375	464	568	693	1381	835	939	1867	3151	1176	2334	3474	3728	1419	2808	1660	6387
	5000	7	12	19	31	48	77	120	150	186	227	277	554	334	376	752	1275	472	942	1409	1514	571	1137	669	2636
240 Volts	0	106436	106436	106436	106436	106436	106436	106436	106436	106436	106436	106436	106436	106436	106436	106436	106436	106436	106436	106436	106436	106436	106436	106436	106436
	5	8887	13904	21532	32389	45735	60749	73845	78747	82777	85835	88240	97163	90075	90893	98370	101300	92551	99174	101524	101685	93790	99798	94713	103273
	10	4485	7074	11133	17299	25864	37638	51226	57685	63640	68667	72931	88240	76343	78004	90893	96433	81138	92551	96895	97222	83433	93790	85128	100272
	25	1802	2854	4524	7134	10972	16845	25081	29936	35145	40340	45490	66655	50210	52891	72557	83553	57983	76254	84686	85470	61901	78969	64897	92138
	50	902	1430	2272	3597	5573	8682	13297	16222	19561	23167	27079	45490	31027	33520	52891	67278	38530	57983	69145	70441	42724	61901	46153	80979
	100	451	716	1138	1805	2806	4399	6822	8410	10277	12377	14774	27079	17344	19086	33520	47434	22780	38530	49735	51373	26135	42724	29085	64897
	200	225	358	569	904	1407	2213	3452	4275	5258	6385	7705	14774	9167	10197	19086	29310	12463	22780	31355	32862	14639	26135	16662	46153
	500	90	143	228	362	564	888	1390	1726	2131	2600	3158	6215	3788	4244	8267	13479	5270	10156	14684	15606	6295	11993	7290	24523
	1000	45	71	114	181	282	444	696	866	1070	1307	1592	3158	1914	2150	4244	7070	2684	5270	7759	8294	3226	6295	3761	13724
	2000	22	35	57	90	141	222	348	433	536	655	799	1592	962	1082	2150	3621	1355	2684	3989	4278	1633	3226	1910	7290
	5000	9	14	22	36	56	89	139	173	214	262	320	639	386	434	866	1469	545	1086	1623	1744	658	1310	771	3028
480 Volts	0	53218	53218	53218	53218	53218	53218	53218	53218	53218	53218	53218	53218	53218	53218	53218	53218	53218	53218	53218	53218	53218	53218	53218	53218
	5	16329	23631	31927	39318	44376	47607	49403	49923	50346	50656	50901	52063	51093	51170	52187	52564	51363	52280	52591	52610	51517	52357	51636	52815
	10	8682	13292	19728	27509	34937	41086	45082	46327	47310	48026	48581	50901	49007	49185	51170	51918	49587	51363	51972	52012	49899	51517	50136	52417
	25	3568	5603	8738	13327	19266	26497	33468	36286	38676	40541	42032	47437	43180	43705	48220	50028	44738	48729	50170	50271	45502	49119	46069	51254
	50	1797	2838	4478	6996	10568	15671	21960	25158	28233	30943	33327	42032	35289	36278	43705	47053	38127	44738	47344	47548	39484	45502	40489	49414
	100	901	1427	2262	3567	5486	8422	12540	14968	17572	20170	22745	33327	25105	26445	36278	41776	28991	38127	42343	42735	30950	39484	32448	46069
	200	451	715	1136	1798	2786	4341	6648	8111	9780	11583	13539	22745	15513	16760	26445	33639	19265	28991	34572	35220	21362	30950	23076	40489
	500	180	286	455	722	1123	1764	2742	3387	4149	5014	6011	11219	7094	7839	14113	20580	9442	16446	21725	22550	10928	18454	12261	29479
	1000	90	143	227	361	563	886	1384	1715	2112	2569	3107	6011	3707	4133	7839	12271	5078	9442	13199	13890	5996	10928	6862	20136
	2000	45	71	114	181	282	444	695	863	1065	1300	1579	3107	1894	2122	4133	6739	2635	5078	7342	7803	3147	5996	3645	12261
	5000	18	28	45	72	112	177	278	346	428	523	637	1267	767	862	1706	2855	1078	2123	3138	3359	1297	2543	1514	5622
600 Volts	0	42574	42574	42574	42574	42574	42574	42574	42574	42574	42574	42574	42574	42574	42574	42574	42574	42574	42574	42574	42574	42547	42574	42574	42574
	5	18739	25386	31517	35877	38399	39889	40698	40932	41128	41273	41391	41984	41484	41521	42045	42239	41617	42092	42252	42262	41696	42131	41757	42367
	10	10506	15603	21945	28331	33240	36622	38571	39144	39603	39937	40199	41391	40403	40486	41521	41906	40686	41617	41933	41953	40845	41696	40966	42162
	25	4420	6882	10556	15589	21381	27327	32010	33642	34955	35931	36691	39605	37269	37521	39976	40923	38049	40230	40993	41045	38448	40429	38747	41557
	50	2237	3523	5524	8521	12568	17859	23501	25990	28191	29975	31442	36691	32589	33131	37521	39338	34170	38049	39485	39589	34932	38448	35496	40581
	100	1124	1778	2812	4412	6720	10125	14569	16977	19397	21634	23688	31442	25441	26362	33131	36388	28081	34170	36686	36895	29356	34932	30307	38747
	200	563	892	1416	2238	3453	5337	8049	9700	11520	13398	15329	23688	17168	18256	26362	31358	20361	28081	31914	32298	22026	29356	23326	35496
	500	225	358	569	901	1400	2192	3390	4168	5077	6089	7229	12955	8433	9233	15745	21562	10905	17833	22455	23083	12387	19532	13661	28215
	1000	112	179	284	451	703	1105	1721	2129	2614	3168	3813	7229	4520	5015	9233	13862	6090	10905	14740	15380	7108	12387	8040	20888
	2000	56	89	142	226	352	554	866	1075	1325	1614	1956	3813	2339	2613	5015	7988	3225	6090	8637	9126	3827	7108	4402	13661
	5000	22	35	57	90	141	222	348	432	534	652	794	1573	954	1071	2108	3493	1336	2610	3826	4083	1603	3109	1865	6665

Copyright National Electrical Manufacturers Association
Provided by IHS under license with NEMA
No reproduction or networking permitted without license from IHS

AB*1 75 ■ 2595512 0064676 4 ■

Table A-11
Transformer Impedances

(Based on the NEMA Standards Publication for Secondary Unit Substations, Publication No. 210-1970.)

Single-phase kVA	Percent Impedance R	X	Z	Short-circuit Table
25	1.3	1.4	1.9	A-13
37.5	1.0	1.4	1.7	A-14
50	1.0	1.4	1.7	A-15
75	1.0	1.5	1.8	A-16
100	0.9	1.6	1.8	A-17
167	0.9	1.7	1.9	A-18
250	0.8	2.9	3.0	A-19

Table A-12
Aluminum Conductor Impedances

The following impedances are for triplexed conductors as shown in Fig. A-3 which are identical to each other except that the neutral (ground) conductor is uninsulated. Conductor sizes, insulation thicknesses and three-conductor ampacities are taken from the "National Electrical Code" as specified for Types T and TW for aluminum wire sizes up through 4/0 AWG and Types RHW and THW for larger conductors. R and X values are given per conductor at 50°C total temperature, no metallic enclosure, in ohms per 1000 feet at 60 hertz.

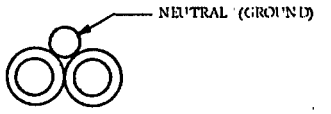

Fig. A-3

Probable Design Ampacity	Conductor Data Size, AWG or MCM	Ampacity	Line to Line R	X	Line to Neutral R	X
30	6	40	0.741	0.0349	0.741	0.0298
50	4	55	0.466	0.0329	0.466	0.0286
100	2	100	0.292	0.0312	0.292	0.0276
110	1	110	0.232	0.0314	0.232	0.0273
125	1/0	125	0.185	0.0305	0.185	0.0267
150	2/0	150	0.146	0.0297	0.146	0.0263
200	4/0	200	0.0920	0.0284	0.0920	0.0256
225	300	230	0.0650	0.0280	0.0650	0.0252
250	350	250	0.0557	0.0277	0.0557	0.0250
400	Two 4/0	400	0.0460	0.0142	0.0460	0.0128
500	Two 350	500	0.02785	0.01385	0.02785	0.0125

Not for Resale

Copyright National Electrical Manufacturers Association
Provided by IHS under license with NEMA
No reproduction or networking permitted without license from IHS

Table A-13

Symmetrical Single-phase Short-circuit Currents in Amperes at Various Distances From a Distribution Transformer
Rated 120/240 Volts, 3-wire, 25 kVA, Z = 1.91 Percent

Transformer Secondary Voltage	Distance, Feet	Wire Size of Aluminum Conductors										
		6 AWG	4 AWG	2 AWG	1 AWG	1/0 AWG	2/0 AWG	4/0 AWG	300 MCM	350 MCM	Two 4/0 MCM	Two 350 MCM
240 Volts	0	5438	5438	5438	5438	5438	5438	5438	5438	5438	5438	5438
Line to Line	5	4830	5037	5174	5222	5260	5292	5337	5360	5367	5387	5403
	10	4310	4674	4927	5017	5090	5152	5239	5283	5298	5337	5367
	25	3191	3796	4283	4471	4628	4765	4963	5065	5101	5191	5264
	50	2180	2841	3478	3753	3997	4218	4555	4735	4800	4963	5101
	75	1643	2251	2907	3215	3501	3772	4204	4444	4532	4751	4946
	100	1315	1857	2488	2803	3107	3404	3899	4184	4290	4555	4800
	125	1095	1579	2171	2481	2788	3097	3632	3952	4072	4373	4662
	150	937	1371	1923	2222	2525	2838	3398	3743	3875	4204	4532
	175	819	1212	1725	2011	2306	2618	3191	3554	3695	4046	4408
	200	728	1085	1563	1835	2121	2428	3006	3383	3531	3899	4290
	500	310	479	731	890	1071	1286	1761	2132	2293	2693	3241
	1000	158	248	386	477	584	716	1035	1313	1442	1761	2293
120 Volts	0	8080	8080	8080	8080	8080	8080	8080	8080	8080	8080	8080
Line to Ground	5	5670	6390	6927	7128	7292	7432	7634	7737	7773	7851	7924
	10	4282	5221	6023	6349	6625	6869	7230	7421	7488	7634	7773
	25	2421	3306	4268	4728	5156	5564	6225	6604	6743	7042	7353
	50	1390	2027	2835	3277	3725	4191	5034	5570	5776	6225	6743
	75	974	1457	2114	2496	2903	3348	4215	4810	5048	5569	6223
	100	749	1136	1683	2013	2374	2783	3621	4229	4481	5034	5776
	125	608	931	1397	1685	2007	2379	3171	3772	4027	4589	5388
	150	512	788	1194	1449	1737	2076	2820	3403	3656	4215	5048
	175	442	683	1042	1270	1531	1842	2538	3100	3347	3896	4748
	200	389	603	925	1131	1369	1654	2307	2845	3086	3621	4481
	500	159	250	392	487	601	743	1099	1431	1591	1951	2669
	1000	80	126	200	250	310	387	586	781	879	1099	1591

Not for Resale

AB*1 75 2595512 0064677 6

Copyright National Electrical Manufacturers Association
Provided by IHS under license with NEMA
No reproduction or networking permitted without license from IHS

AB*1 75 ■ 2595512 0064678 8 ■

Table A-14

Symmetrical Single-phase Short-circuit Currents in Amperes at Various Distances From a Distribution Transformer Rated 120/240 Volts, 3-wire, 37.5 kVA, Z = 1.72 Percent

Transformer Secondary Voltage	Distance, Feet	Wire Size of Aluminum Conductors										
		6 AWG	4 AWG	2 AWG	1 AWG	1/0 AWG	2/0 AWG	4/0 AWG	300 MCM	350 MCM	Two 4/0 MCM	Two 350 MCM
240 Volts Line to Line	0	9040	9040	9040	9040	9040	9040	9040	9040	9040	9040	9040
	5	7579	8071	8398	8511	8602	8678	8785	8838	8856	8911	8947
	10	6390	7213	7804	8015	8188	8335	8540	8643	8679	8785	8856
	25	4181	5316	6332	6744	7099	7410	7866	8100	8183	8422	8593
	50	2582	3593	4707	5235	5725	6188	6919	7317	7461	7866	8183
	75	1855	2687	3706	4235	4755	5274	6152	6659	6847	7367	7807
	100	1445	2139	3043	3540	4049	4578	5524	6101	6320	6919	7461
	125	1182	1775	2576	3035	3518	4036	5006	5625	5865	6515	7142
	150	1000	1515	2231	2652	3106	3604	4571	5214	5468	6152	6847
	175	867	1322	1967	2354	2778	3252	4203	4856	5119	5823	6574
	200	764	1172	1758	2115	2511	2961	3887	4543	4811	5524	6320
	500	316	495	769	948	1159	1417	2026	2540	2773	3376	4291
	1000	159	252	396	493	608	755	1120	1456	1617	2026	2773
120 Volts Line to Ground	0	13830	13830	13830	13830	13830	13830	13830	13830	13830	13830	13830
	5	8099	9654	10904	11389	11792	12139	12641	12900	12991	13214	13399
	10	5513	7206	8843	9557	10184	10752	11613	12076	12241	12641	12991
	25	2755	3983	5497	6297	7089	7887	9266	10097	10408	11152	11895
	50	1492	2256	3318	3948	4627	5378	6863	7887	8297	9266	10408
	75	1021	1570	2367	2862	3417	4059	5424	6451	6881	7895	9238
	100	776	1203	1838	2242	2704	3253	4476	5449	5872	6863	8297
	125	626	975	1502	1842	2236	2712	3807	4713	5117	6062	7525
	150	524	820	1269	1562	1906	2325	3310	4151	4533	5424	6881
	175	451	707	1099	1357	1660	2034	2927	3708	4068	4906	6337
	200	396	621	969	1198	1470	1807	2624	3349	3688	4476	5872
	500	160	253	400	499	619	772	1166	1547	1737	2172	3108
	1000	80	127	202	253	315	395	605	815	922	1166	1737

Not for Resale

Copyright National Electrical Manufacturers Association
Provided by IHS under license with NEMA
No reproduction or networking permitted without license from IHS

Not for Resale

AB*1 75 ■ 2595512 0064679 T ■

Table A-15

Symmetrical Single-phase Short-circuit Currents in Amperes at Various Distances From a Distribution Transformer
Rated 120/240 Volts, 3-wire, 50 kVA, Z = 1.72 Percent

Transformer Secondary Voltage	Distance, Feet	Wire Size of Aluminum Conductors										
		6 AWG	4 AWG	2 AWG	1 AWG	1/0 AWG	2/0 AWG	4/0 AWG	300 MCM	350 MCM	Two 4/0 MCM	Two 350 MCM
240 Volts Line to Line	0	12035	12035	12035	12035	12035	12035	12035	12035	12035	12035	12035
	5	9525	10351	10912	11108	11267	11400	11587	11679	11712	11808	11872
	10	7658	8936	9905	10262	10556	10807	11162	11341	11404	11587	11712
	25	4632	6127	7587	8216	8773	9273	10025	10418	10559	10959	11255
	50	2731	3913	5320	6032	6721	7396	8512	9145	9378	10025	10559
	75	1926	2852	4056	4719	5397	6102	7361	8128	8419	9216	9937
	100	1486	2239	3267	3860	4491	5173	6466	7303	7629	8512	9378
	125	1209	1841	2730	3261	3838	4481	5756	6623	6969	7899	8874
	150	1019	1562	2344	2820	3347	3948	5181	6054	6410	7361	8419
	175	881	1357	2052	2483	2966	3525	4707	5572	5932	6886	8006
	200	775	1199	1824	2217	2662	3183	4311	5160	5519	6466	7629
	500	318	499	781	967	1188	1462	2128	2714	2987	3686	4841
	1000	160	253	399	497	616	767	1149	1510	1686	2128	2987
120 Volts Line to Ground	0	18421	18421	18421	18421	18421	18421	18421	18421	18421	18421	18421
	5	9359	11584	13503	14281	14939	15515	16361	16803	16960	17340	17663
	10	6027	8169	10416	11457	12403	13283	14662	15424	15698	16361	16960
	25	2866	4235	6021	7017	8040	9113	11071	12314	12791	13925	15131
	50	1522	2329	3490	4202	4992	5895	7776	9155	9726	11071	12791
	75	1035	1604	2451	2989	3605	4337	5967	7263	7826	9147	11056
	100	784	1223	1887	2318	2819	3426	4834	6012	6541	7776	9726
	125	631	988	1534	1892	2313	2830	4060	5125	5615	6755	8675
	150	528	829	1292	1598	1961	2410	3498	4465	4917	5967	7826
	175	454	713	1116	1383	1701	2098	3072	3955	4373	5342	7127
	200	398	626	982	1219	1502	1858	2739	3549	3937	4834	6541
	500	160	254	402	503	625	781	1187	1588	1789	2249	3281
	1000	80	127	202	254	316	397	610	826	936	1187	1789

Copyright National Electrical Manufacturers Association
Provided by IHS under license with NEMA
No reproduction or networking permitted without license from IHS

Not for Resale

AB*1 75 2595512 0064680 6

Table A-16

Symmetrical Single-phase Short-circuit Currents in Amperes at Various Distances From a Distribution Transformer
Rated 120/240 Volts, 3-wire, 75 kVA, Z = 1.80 Percent

Transformer Secondary Voltage	Distance, Feet	Wire Size of Aluminum Conductors										
		6 AWG	4 AWG	2 AWG	1 AWG	1/0 AWG	2/0 AWG	4/0 AWG	300 MCM	350 MCM	Two 4/0 MCM	Two 350 MCM
240 Volts Line to Line	0	17180	17180	17180	17180	17180	17180	17180	17180	17180	17180	17180
	5	12439	13943	15002	15377	15682	15939	16298	16477	16540	16731	16855
	10	9346	11428	13133	13786	14335	14805	15479	15818	15938	16298	16540
	25	5138	7116	9261	10260	11180	12037	13371	14086	14344	15093	15652
	50	2885	4262	6039	7007	7990	9001	10781	11846	12246	13371	14344
	75	1999	3024	4442	5271	6157	7123	8974	10181	10652	11954	13219
	100	1528	2340	3505	4211	4990	5872	7661	8907	9410	10781	12246
	125	1237	1908	2891	3502	4189	4986	6672	7907	8419	9801	11397
	150	1038	1610	2459	2995	3607	4328	5903	7103	7611	8974	10652
	175	895	1392	2139	2616	3166	3822	5290	6444	6942	8268	9995
	200	786	1226	1892	2321	2820	3421	4791	5894	6379	7661	9410
	500	319	504	792	985	1216	1507	2233	2898	3216	4027	5486
	1000	160	254	402	502	624	779	1179	1564	1756	2233	3216
120 Volts Line to Ground	0	26505	26505	26505	26505	26505	26505	26505	26505	26505	26505	26505
	5	10941	14226	17346	18688	19857	20905	22478	23315	23612	24358	24984
	10	6605	9330	12482	14056	15553	17004	19383	20747	21246	22478	23612
	25	2982	4504	6612	7856	9190	10657	13522	15469	16240	18106	20221
	50	1553	2405	3671	4475	5392	6478	8880	10769	11582	13522	16240
	75	1049	1639	2536	3121	3805	4637	6585	8233	8976	10734	13532
	100	792	1243	1937	2395	2937	3608	5226	6656	7320	8880	11582
	125	636	1001	1566	1943	2391	2952	4330	5583	6177	7565	10116
	150	532	838	1315	1634	2016	2497	3696	4807	5341	6585	8976
	175	456	720	1133	1410	1743	2163	3223	4220	4704	5828	8065
	200	400	632	995	1240	1534	1908	2857	3760	4203	5226	7320
	500	161	255	404	506	630	790	1209	1628	1842	2328	3463
	1000	80	128	203	255	318	399	616	836	951	1209	1842

Copyright National Electrical Manufacturers Association
Provided by IHS under license with NEMA
No reproduction or networking permitted without license from IHS

Not for Resale

AB*1 75 ■ 2595512 0064681 8 ■

Table A-17

Symmetrical Single-phase Short-circuit Currents in Amperes at Various Distances From a Distribution Transformer Rated 120/240 Volts, 3-wire, 100 kVA, Z = 1.84 Percent

Transformer Secondary Voltage	Distance, Feet	Wire Size of Aluminum Conductors										
		6 AWG	4 AWG	2 AWG	1 AWG	1/0 AWG	2/0 AWG	4/0 AWG	300 MCM	350 MCM	Two 4/0 MCM	Two 350 MCM
240 Volts Line to Line	0	22423	22423	22423	22423	22423	22423	22423	22423	22423	22423	22423
	5	15087	17370	19013	19596	20071	20468	21021	21293	21388	21709	21896
	10	10716	13611	16131	17125	17966	18691	19728	20245	20427	21021	21388
	25	5495	7858	10618	11979	13272	14509	16480	17549	17935	19122	19973
	50	2987	4501	6560	7736	8974	10292	12721	14228	14801	16480	17935
	75	2046	3139	4709	5661	6710	7892	10269	11895	12542	14389	16233
	100	1555	2407	3665	4451	5341	6376	8578	10190	10856	12721	14801
	125	1254	1951	2998	3664	4430	5340	7352	8899	9557	11374	13585
	150	1051	1640	2535	3112	3782	4590	6426	7891	8528	10269	12542
	175	904	1415	2196	2704	3298	4023	5703	7084	7696	9351	11641
	200	793	1244	1936	2390	2924	3579	5125	6424	7009	8578	10856
	500	321	507	800	997	1235	1536	2301	3018	3366	4258	5943
	1000	161	255	404	505	628	786	1197	1598	1799	2301	3366
120 Volts Line to Ground	0	35187	35187	35187	35187	35187	35187	35187	35187	35187	35187	35187
	5	12176	16458	20845	22823	24588	26195	28640	29947	30411	31661	32651
	10	7015	10204	14156	16244	18301	20359	23854	25906	26662	28640	30411
	25	3058	4687	7031	8467	10054	11857	15557	18197	19268	21958	25087
	50	1573	2455	3792	4660	5669	6891	9702	12021	13047	15557	19268
	75	1058	1662	2593	3209	3938	4842	7022	8941	9830	11968	15575
	100	797	1256	1969	2446	3016	3729	5496	7110	7876	9702	13047
	125	640	1009	1587	1976	2443	3032	4513	5898	6568	8150	11216
	150	534	843	1329	1657	2052	2554	3827	5038	5631	7022	9830
	175	458	724	1144	1427	1770	2206	3322	4396	4927	6166	8746
	200	401	635	1003	1253	1555	1941	2935	3899	4379	5496	7876
	500	161	255	406	508	634	795	1222	1653	1875	2380	3582
	1000	80	128	203	255	319	401	619	843	959	1222	1875

Copyright National Electrical Manufacturers Association
Provided by IHS under license with NEMA
No reproduction or networking permitted without license from IHS

AB*1 75 ■ 2595512 0094682 T ■

Table A-18

Symmetrical Single-phase Short-circuit Currents in Amperes at Various Distances From a Distribution Transformer Rated 120/240 Volts, 3-wire, 167 kVA, Z = 1.92 Percent

Transformer Secondary Voltage	Distance, Feet	Wire Size of Aluminum Conductors										
		6 AWG	4 AWG	2 AWG	1 AWG	1/0 AWG	2/0 AWG	4/0 AWG	300 MCM	350 MCM	Two 4/0 MCM	Two 350 MCM
240 Volts Line to Line	0	35475	35475	35475	35475	35475	35475	35475	35475	35475	35475	35475
	5	19525	23936	27475	28798	29894	30820	32120	32758	32982	33750	34194
	10	12537	17015	21545	23522	25273	26841	29158	30337	30753	32120	32982
	25	5867	8728	12461	14503	16580	18711	22417	24581	25382	27824	29729
	50	3085	4745	7148	8616	10242	12087	15831	18410	19441	22417	25382
	75	2090	3250	4988	6091	7356	8852	12131	14617	15664	18603	22048
	100	1580	2470	3826	4704	5728	6966	9803	12086	13084	15831	19441
	125	1270	1992	3102	3830	4686	5738	8214	10289	11221	13746	17359
	150	1061	1669	2608	3228	3964	4875	7064	8951	9815	12131	15664
	175	912	1435	2250	2790	3434	4237	6194	7918	8719	10847	14262
	200	799	1259	1978	2456	3029	3746	5514	7097	7841	9803	13084
	500	322	509	806	1008	1252	1565	2372	3152	3540	4519	6525
	1000	161	255	406	508	633	793	1215	1634	1847	2372	3540
120 Volts Line to Ground	0	56066	56066	56066	56066	56066	56066	56066	56066	56066	56066	56066
	5	13594	19398	26197	29608	32847	35970	41023	43855	44878	47654	49947
	10	7424	11163	16241	19169	22245	25538	31671	35595	37096	41023	44878
	25	3128	4862	7461	9124	11033	13305	18364	22348	24058	28331	34076
	50	1591	2500	3908	4842	5950	7328	10673	13641	15021	18364	24058
	75	1066	1682	2645	3292	4068	5048	7504	9790	10891	13513	18512
	100	802	1267	1999	2493	3090	3849	5782	7629	8536	10673	15021
	125	642	1016	1606	2007	2491	3110	4702	6248	7017	8813	12629
	150	536	848	1343	1679	2086	2608	3962	5289	5955	7504	10891
	175	460	728	1153	1443	1795	2246	3423	4586	5173	6532	9572
	200	402	638	1011	1265	1574	1972	3012	4047	4572	5782	8536
	500	161	256	407	510	637	800	1235	1679	1908	2430	3709
	1000	80	128	204	256	319	402	623	850	968	1235	1908

Not for Resale

Copyright National Electrical Manufacturers Association
Provided by IHS under license with NEMA
No reproduction or networking permitted without license from IHS

Table A-19

Symmetrical Single-phase Short-circuit Currents in Amperes at Various Distances From a Distribution Transformer Rated 120/240 Volts, 3-wire, 250 kVA, Z = 3.01 Percent

Transformer Secondary Voltage	Distance, Feet	Wire Size of Aluminum Conductors										
		6 AWG	4 AWG	2 AWG	1 AWG	1/0 AWG	2/0 AWG	4/0 AWG	300 MCM	350 MCM	Two 4/0 MCM	Two 350 MCM
240 Volts Line to Line	0	33936	33936	33936	33936	33936	33936	33936	33936	33936	33936	33936
	5	20488	24812	27957	29027	29875	30557	31453	31861	32002	32694	32956
	10	13123	17851	22416	24284	25866	27209	29044	29890	30178	31453	32002
	25	6025	9043	12998	15137	17278	19416	22926	24797	25454	27898	29312
	50	3131	4849	7361	8902	10610	12535	16348	18834	19786	22926	25454
	75	2111	3300	5098	6246	7566	9128	12514	14996	16010	19168	22322
	100	1592	2500	3892	4800	5861	7149	10084	12395	13382	16348	19786
	125	1278	2011	3146	3894	4778	5866	8425	10537	11468	14195	17717
	150	1067	1682	2640	3275	4031	4970	7227	9152	10021	12514	16010
	175	916	1446	2273	2825	3485	4310	6323	8083	8891	11174	14585
	200	802	1267	1996	2484	3069	3804	5618	7234	7987	10084	13382
	500	322	511	809	1012	1259	1575	2394	3184	3576	4591	6632
	1000	161	256	406	509	634	796	1221	1643	1857	2394	3576
120 Volts Line to Ground	0	55685	55685	55685	55685	55685	55685	55685	55685	55685	55685	55685
	5	14229	20560	27961	31591	34948	38060	42761	45166	45989	48862	50560
	10	7626	11596	17073	20246	23568	27078	33371	37129	38492	42761	45989
	25	3165	4950	7657	9407	11428	13843	19205	23338	25064	29868	35458
	50	1600	2523	3963	4925	6072	7504	10998	14090	15512	19205	25064
	75	1071	1693	2671	3331	4126	5134	7672	10037	11171	14012	19203
	100	804	1273	2014	2516	3124	3899	5884	7784	8715	10998	15512
	125	644	1020	1616	2021	2513	3143	4771	6354	7140	9042	12994
	150	537	851	1349	1689	2102	2632	4011	5367	6046	7672	11171
	175	460	730	1158	1450	1806	2264	3459	4644	5242	6661	9792
	200	403	639	1015	1271	1583	1986	3041	4093	4626	5884	8715
	500	161	256	407	511	638	803	1240	1687	1918	2449	3746
	1000	80	128	204	256	320	403	624	852	971	1240	1918

Not for Resale

AB*1 75 ■ 2595512 0064983 1 ■

AB*1 75 ■ 2595512 0064684 3 ■

APPENDIX B
REFERENCED STANDARDS

American National Standards Institute
1430 Broadway
New York, N.Y. 10018

C37.5 Methods for Determining Values of a Sinusoidal Current Wave, a Normal-Frequency Recovery Voltage, and a Guide for Calculation of Fault Currents for Application of AC High-Voltage Circuit Breakers Rated on a Total Current Basis

Institute of Electrical and Electronics Engineers
345 East 47 Street
New York, N.Y. 10017

1 (1962) General Principles Upon Which Temperature Limits are Based in the Rating of Electrical Equipment

National Fire Protection Association
470 Atlantic Avenue
Boston, Mass. 02210

70 National Electrical Code

Underwriters Laboratories Inc.
1285 Walt Whitman Road
Melville, L.I., N.Y. 11749

489 Molded-Case Circuit Breakers and Circuit-Breaker Enclosures

508 Electric Industrial Control Equipment

698 Electric Industrial Control Equipment for Use in Hazardous Locations, Class I, Groups A, B, C, and D and Class II, Groups E, F, and G

Bulletin of Research #23 Rain Tests of Electric Equipment

Copyright National Electrical Manufacturers Association
Provided by IHS under license with NEMA
No reproduction or networking permitted without license from IHS
Not for Resale

AB*1 75 2595512 0064685 5

NEMA STANDARDIZATION

The purpose of NEMA Standards, their classification and status are set forth in certain clauses of the NEMA Bylaws, which are quoted below:

Purpose of Standards

National Electrical Manufacturers Association Standards are adopted in the public interest and are designed to eliminate misunderstandings between the manufacturer and the purchaser and to assist the purchaser in selecting and obtaining the proper product for its particular need. Existence of a National Electrical Manufacturers Association Standard does not in any respect preclude any member or nonmember from manufacturing or selling products not conforming to the standard.

(Bylaw—Art. V, Sec. 1)

Definition of a Standard

A standard of the National Electrical Manufacturers Association defines a product, process or procedure with reference to one or more of the following: nomenclature, composition, construction, dimensions, tolerances, safety, operating characteristics, performance, rating, testing, and the service for which they are designed.

(Bylaw—Art. V, Sec. 2, Subsection A)

Dimensions

Where dimensions are given for interchangeability purposes, alternate dimensions satisfying the other provisions of the standards publication may be capable of otherwise equivalent performance.

(NEMA Policy Memorandum 84-2, dated June 7, 1984)

Classes of Standards

National Electrical Manufacturers Association Standards are of two classes:

1. NEMA Standard, which relates to a product commercially standardized and subject to repetitive manufacture, which standard has been approved by at least 90 percent of the members of the Subdivision eligible to vote thereon;
2. Suggested Standard for Future Design, which may not have been regularly applied to a commercial product, but which suggests a sound engineering approach to future development, which standard has been approved by at least two-thirds of the members of the Subdivision eligible to vote thereon.

(Bylaw—Art. V, Sec. 2, Subsection B)

Authorized Engineering Information

Authorized Engineering Information consists of explanatory data and other engineering information of an informative character not falling within the classification of NEMA Standard or Suggested Standard for Future Design.

(Bylaw—Art. V, Sec. 6, 1st Sentence)

Official Standards Proposal

An Official Standards Proposal is an official draft of a proposed standard which is formally recommended to an outside organization(s) for consideration, comment and/or approval.

(Bylaw—Art. V, Sec. 4, Subsection A)

Identification of Status

Standards in NEMA Standards Publications are identified in the foreword or following each standard as "NEMA Standard" or "Suggested Standard for Future Design." These indicate the status of the standard. These words are followed by a date which indicates when the standard was adopted in its present form by the Association.

The material identified as "Authorized Engineering Information" and "Official Standards Proposal" is designated similarly.

Copyright National Electrical Manufacturers Association
Provided by IHS under license with NEMA
No reproduction or networking permitted without license from IHS
Not for Resale