L-55-21

270-88 6470247 0000117 0

NEMA STANDARDS PUBLICATION NO. 270

nema

# Procedure for Fluorescent Lamp/ Ballast/Fixture Performance Comparison

NEMA

NATIONAL ELECTRICAL MANUFACTURERS ASSOCIATION ■ 2101 L STREET, N.W., WASHINGTON, D.C. 20037

Copyright National Electrical Manufacturers Association
Provided by IHS under license with NEMA
No reproduction or networking permitted without license from IHS
Not for Resale

# NEMA 270

## *PROCEDURE FOR FLUORESCENT LAMP/BALLAST/FIXTURE PERFORMANCE COMPARISON*

*Published by*
**National Electrical Manufacturers Association**
2101 L Street, NW
Washington, DC 20037

©1988 by National Electrical Manufacturers Association

Copyright National Electrical Manufacturers Association
Provided by IHS under license with NEMA
No reproduction or networking permitted without license from IHS
Not for Resale

# TABLE OF CONTENTS


| | | Page |
|---|---|---|
| | FOREWORD | i |
| | SCOPE | ii |
| **Section 1** | REFERENCED STANDARDS AND DEFINITIONS | |
| | Referenced Standards | 1 |
| | Definitions | 1 |
| **Section 2** | SELECTION OF COMPONENTS | |
| | Test Specimen—Lighting Fixture | 3 |
| | Test Specimen(s) Fluorescent Ballast—Base Test | 3 |
| | Test Specimen(s) Fluorescent Ballast(s) | 3 |
| | Test Specimen(s) Fluorescent Lamp(s) | 3 |
| | Test Specimen(s) Fluorescent Lamp(s)—Base Test | 3 |
| **Section 3** | TESTING FACILITIES & EQUIPMENT | |
| | Facilities | 4 |
| | Photometric Laboratory | 4 |
| | Test Chamber | 4 |
| | General Criteria | 4 |
| | Calibration Rack | 4 |
| | Photodetector | 4 |
| | Line Voltage | 4 |
| | Line Voltage Wave Shape | 4 |
| | Line Voltage Source Impedance | 4 |
| | Line Voltage Stability | 5 |
| | Electrical Instrumentation | 5 |
| | Measurement of Input Power | 5 |
| | Safety Precautions | 5 |
| **Section 4** | TESTING PROCEDURES | |
| | General | 6 |
| | Base Test | 6 |
| | Testing Conditions | 6 |
| | Calibration of Lamp(s) | 6 |
| | Measurement of Calibration Flux | 6 |
| **Section 5** | CALCULATIONS | |
| | Calculation of Ballast Factor | 7 |
| | Ballast Factor/Energy Saving Lamps | 7 |
| | Lamp Normalizing Factor | 7 |
| | Ballast Normalizing Factor | 7 |
| | Normalized Head-On Flux | 7 |
| | Comparative Light Output | 7 |
| | Normalized Watts Input | 7 |
| | Comparative Watts Input | 7 |


Copyright National Electrical Manufacturers Association
Provided by IHS under license with NEMA
No reproduction or networking permitted without license from IHS
Not for Resale

**Section 6** REPORTING OF TEST RESULTS

Reporting Format . . . . . 9
Fixture Description . . . . . 9
General Lamp/Ballast Description . . . . . 9
Ballast Description . . . . . 9
Lamp Description . . . . . 9
Normalized Watt Input . . . . . 9
Comparative Watt Input . . . . . 9
Comparative Light Output "Flux" . . . . . 9

**Appendix A** SAMPLE WORKSHEETS AND REPORTING FORMAT

A-1 Sample NEMA Worksheet . . . . . 10
A-2 Sample Test 5000-1 Worksheet . . . . . 11
A-3 Sample Test 5000-2 Worksheet . . . . . 12
A-4 Sample Test 5000-3 Worksheet . . . . . 13
A-5 Sample Test 5000-4 Worksheet . . . . . 14
A-6 Sample Reporting Format . . . . . 15

Copyright National Electrical Manufacturers Association
Provided by IHS under license with NEMA
No reproduction or networking permitted without license from IHS
Not for Resale

# Foreword

This Standards Publication was developed to assist manufacturers of lighting fixtures in performing a standardized comparison test for determining the normalized comparative input power (watts) to the normalized comparative light output (lumens) for a given fluorescent fixture incorporating various types of applicable lamps and ballasts.

This Standards Publication was prompted by the need of the lighting fixture manufacturing industry to have a uniform method of determining performance of their product using various components.

The preparation of this Standards Publication was done in close cooperation with the Lamp Section, Ballast Section, and Indoor Lighting Section of the NEMA Lighting Equipment Division and with the input of users and other interested parties. The views and opinions of all parties are sought and evaluated.

Comments are welcomed. They should be addressed to:

Manager, Engineering Department
National Electrical Manufacturers Association
2101 L Street, NW
Washington, DC 20037



Copyright National Electrical Manufacturers Association
Provided by IHS under license with NEMA
No reproduction or networking permitted without license from IHS
Not for Resale

## Scope

This Standards Publication is intended to provide lighting engineers and designers with a practical means to evaluate the performance of various four-foot bipin fluorescent lamp/ballast combinations when installed in a particular fluorescent fixture under test criteria that simulates a given set of in-service use conditions. This publication is not intended to be used as a means of comparing different fixture designs.



Copyright National Electrical Manufacturers Association
Provided by IHS under license with NEMA
No reproduction or networking permitted without license from IHS
Not for Resale

# PROCEDURE FOR FLUORESCENT LAMP/BALLAST/FIXTURE PERFORMANCE COMPARISON

## Section 1
## REFERENCED STANDARDS AND DEFINITIONS

### 1.1 REFERENCED STANDARDS

The following publications are adopted in whole or in part as indicated by reference in this Standards Publication.

**American National Standards Institute**
1430 Broadway
New York, NY 10018

| | |
|---|---|
| ANSI STANDARD C82.2-1984 | *Methods of Measurement of Fluorescent Lamp Ballasts* |
| ANSI STANDARD C82.3-1983 | *Specifications for Fluorescent Lamp Reference Ballasts* |
| ANSI STANDARD C78.1-1978 (R 1984) | *Dimensional and Electrical Characteristics of Rapid Start Type Fluorescent Lamps* |
| ANSI/IEEE STANDARD 100-1984 | *Electrical and Electronics Terms* |

**Illuminating Engineering Society of North America**
345 E. 47th Street
New York, NY 10017

| | |
|---|---|
| IES LIGHTING MANUAL 41-1985 | *Approved Method for Photometric Testing of Indoor Fluorescent Luminaires.* |

### 1.2 DEFINITIONS

Definitions marked with an asterisk (*) are in accordance with ANSI/IEEE 100.

#### BALLAST FACTOR

A term used to describe the percentage of light output, produced when a fluorescent lamp(s) is energized from a commercially available ballast as compared to the light output produced when energized from a reference ballast. Ballast factor tests are run in accordance with ANSI C82.2.

#### BALLAST NORMALIZING FACTOR

A term used to describe a mathematical method of correcting (normalizing) the known ballast factor of test ballast(s) to correlate with the manufacturer's established average ballast factor.

#### FIXTURE

The structural parts of a luminaire, including parts designed to distribute the light, and to position and/or protect the lamp(s), to mount and support the ballast(s) and to provide a wireway or means of connecting the lamp(s) and ballast(s) to the power supply. A fixture includes the ballast(s), but does not include lamp(s).

#### FLUORESCENT BALLAST

An auxiliary device used with an electrical discharge lamp(s) to obtain the necessary circuit conditions (voltage, current, and wave form) for the proper starting and operation of a particular fluorescent lamp(s) from a particular line voltage and frequency.

Copyright National Electrical Manufacturers Association
Provided by IHS under license with NEMA
No reproduction or networking permitted without license from IHS
Not for Resale

### FLUORESCENT LAMP*

A low pressure mercury electric-discharge lamp in which a fluorescing coating (phosphor) transforms a portion of the ultraviolet energy generated by the arc discharge into visible light.

### LUMINAIRE

A complete lighting unit consisting of a lamp(s), and ballast(s) together with parts designed to distribute the light, to position and protect the lamp(s) and to connect the lamp(s) through the ballast(s) to the power supply.

### LAMP NORMALIZING FACTOR

A term used to describe a mathematical method of correcting (normalizing) measured light output values of test lamps to correlate with the published "rated" light output data of production lamps.

### REFERENCE BALLAST

A ballast especially constructed to have certain prescribed electrical characteristics for use in testing electrical discharge lamps and other ballasts in accordance with ANSI C82.3.

Copyright National Electrical Manufacturers Association
Provided by IHS under license with NEMA
No reproduction or networking permitted without license from IHS

Not for Resale

# Section 2
# SELECTION OF COMPONENTS

## 2.1 TEST SPECIMEN—LIGHTING FIXTURE

The fixture selected for test shall be clean and representative of the manufacturer's current and regular production.

NEMA Standard 3-3-1988.

## 2.2 TEST SPECIMEN(S) FLUORESCENT BALLAST—BASE TEST

A ballast(s) chosen for test shall be typical of current production. The base test ballast shall be a standard ballast for operation with standard 40 watt rapid start T12 lamps or equivalent and must have a known certified ballast factor. The ballast factor must be 0.95 ± .025 when tested in accordance with the text procedure of ANSI C82.2.

NEMA Standard 3-3-1988.

As an example, the base test ballast should be equal to, but not limited to the following:

| Typical Manufacturer | Catalog Number |
|---|---|
| Advance Transformer | #RQM 2S40-TP |
| General Electric | #8G1022W |
| Jefferson Electric | #300 3701 800 |
| Robertson Transformer | #RS240P-3 |
| Universal Manufacturing | #446-LR-TC-P |

The above listed ballasts are not intended to be an exclusive list of test ballasts, but are provided only as common examples.

Authorizing Engineering Information 3-3-1988.

## 2.3 TEST SPECIMEN(S) FLUORESCENT BALLAST(S)

Ballast(s) chosen for the test shall be Certified Ballast Manufacturers (CBM) certified and shall be typical of current production with an average ballast factor as shown in Table 5-1. A CBM certified ballast is identified as having a ballast factor of 0.925 minimum in accordance with ANSI C82.2.

Any other test ballast not CBM certified, shall have the ballast factor calculated in accordance with 5.1.

Ballasts that are not CBM certified, shall be tested and certified as having ballast factors that are within ±0.025 of established average ballast factors, or the manufacturer's established ballast factor, for the particular ballast when tested in accordance with ANSI C82.2.

NEMA Standard 3-3-1988.

## 2.4 TEST SPECIMEN(S) FLUORESCENT LAMP(S)

Lamps of stable output should be used. They should be constant in light output for constant line voltage and repeated operation.

Since light output will be measured at only one point, where practical, all test lamps should be of the same size and shape. Changes in lamp geometry may alter the light output distribution. For this reason, comparison of T-8 and T-12 lamps may provide slightly less accurate results.

Lamps selected for tests should be typical of current production and should be selected for uniform luminance and color from end-to-end and around the axis.

Authorized Engineering Information 3-3-1988.

Lamps shall conform to the requirements for reference lamps in accordance with ANSI C78.1. Where American National Standards do not exist for a given lamp type, values published by the lamp manufacturer shall apply. Lamps shall be burned for at least 100 hours in order to ensure stable electrical characteristics.

NEMA Standard 3-3-1988.

## 2.5 TEST SPECIMEN(S) FLUORESCENT LAMP(S)—BASE TEST

Lamps shall be in accordance with 2.4 and shall be of the standard 40 watt rapid-start T-12 cool white type.

NEMA Standard 3-3-1988.

Copyright National Electrical Manufacturers Association
Provided by IHS under license with NEMA
No reproduction or networking permitted without license from IHS
Not for Resale

# Section 3
# TESTING FACILITIES AND EQUIPMENT

## 3.1 FACILITIES

Because of the importance of obtaining accurate and repeatable measurements, one of the two following facilities should be used for testing:

### 3.1.1 Photometric Laboratory

A photometric laboratory that has facilities for performing tests in accordance with all applicable sections of the IES LM-41 except where otherwise described in Section 4.

### 3.1.2 Test Chamber

A test chamber may be used as an alternate to the photometric laboratory if it is of sufficient size and design to negate stray light and to control the temperature at the luminaire without causing drafts.

A means should be provided to support a photodetector under the direct center of the luminaire. The photodetector should be held in secure alignment and on a plane parallel with the luminaire.

The photodetector should be located in a fixed position a minimum of 14 inches (36 inches is recommended for fixtures over 12 inches wide), below the light emitting surface of the luminaire or test lamp(s).

### 3.1.3 General Criteria

Due to the sensitivity of fluorescent lamp light output to air flows, all testing should be conducted in a simulated "draft free" environment. Since air movement is necessary to avoid thermal stratification, care should be taken to minimize any draft or air flow within the immediate vicinity of the test lamps or luminaire, or both.

Temperature should be controlled to 25°C (77°F) within a tolerance of ±1°C (1.8°F).

Lamp circuit pin connections should remain the same throughout the tests both for the calibration and for the luminaire test.

A means should be provided for supporting the luminaire in its normal starting position. A "simulated ceiling board" should be used for the testing of all surface mounted luminaires. The dimensions of the board should be 12 inches greater than the width and length of the luminaire so as to provide a six inch horizontal surface beyond all edges of the luminaire. The "simulated ceiling board" should be constructed using acoustical tile and insulation to create an "R-value" (thermal resistance value) of R-13 to R-15, or other value as applicable. The "R-value" and the means of attaching the fixture, should be shown on the reporting form.

Authorized Engineering Information 3-3-1988.

## 3.2 CALIBRATION RACK

The calibration rack should provide a means of supporting the test lamp(s) in open air in a horizontal position. The supporting frame should be designed so that it will minimize any changes in the temperature of the lamp(s). It should be so constructed that baffles are placed between lamps to prevent any inter-reflections and mutual heating effects. Care should be taken that the baffles do not cause heat buildup. The entire rack and baffles should be painted in matte black with minimum reflectance.

A means should be provided for supporting the calibration rack so that lamp(s) will be supported in the same location and plane as provided for the test fixture.

Authorized Engineering Information 3-3-1988.

## 3.3 PHOTODETECTOR

The photodetector should be a cosine and color corrected type (eye sensitivity corrected). The linearity should be within ±1/2 percent over the range to be used.

A silicon photodetector is suggested for use in that it characteristically registers a lower "noise level," with better stability, linearity, and faster response time than other types of photodetectors.

Authorized Engineering Information 3-3-1988.

## 3.4 LINE VOLTAGE

The ballast(s) in the luminaire should be operated at their rated primary voltage and frequency. Where ballasts are labeled for a range of primary voltages, the rated voltage for test purposes should be considered to be the center of the range.

Authorized Engineering Information 3-3-1988.

## 3.5 LINE VOLTAGE WAVE SHAPE

The luminaire supply voltage should have a wave shape such that the RMS summation of the harmonic component does not exceed 3 percent of the fundamental.

Authorized Engineering Information 3-3-1988.

## 3.6 LINE VOLTAGE SOURCE IMPEDANCE

The supply source should have sufficient power capacity and a sufficiently low impedance compared with the test ballast(s) impedance to insure that the

Copyright National Electrical Manufacturers Association
Provided by IHS under license with NEMA
No reproduction or networking permitted without license from IHS
Not for Resale

voltage to the luminaire does not vary by more than 2 percent with the luminaire in and out of the circuit.

Authorized Engineering Information 3-3-1988.

### 3.7 LINE VOLTAGE STABILITY

The supply voltage shall not vary more than ±0.2 percent from the rated value during the test. Adjustment of voltage to minimize this variance shall be made, if necessary, just prior to taking test readings. The rated line voltage shall be measured and maintained at the input terminal of the ballast or at a close proximity to this point.

NEMA Standard 3-3-1988.

### 3.8 ELECTRICAL INSTRUMENTATION

Instruments which respond to the RMS value and that have a guaranteed accuracy commensurate with the requirement of the test should be selected. Voltmeters, ammeters and wattmeters should provide accuracy of at least ±0.5 percent. Scale calibration is essential to obtain reasonable accuracy of the result. When measuring high frequency electronic ballasts, instrumentation possessing wider bandwidth response may be necessary.

Authorized Engineering Information 3-3-1988.

### 3.9 MEASUREMENT OF INPUT POWER

The recommended circuit shall be shown as Figure 3-1. The input power shall be measured with a voltmeter and potential circuit of the wattmeter in parallel and with the ammeter shorted out. The measured power shall include the power consumed by the voltmeter and the potential circuit of the wattmeter. The true input power shall be obtained by subtracting the calculated power consumption of the two instruments ($V^2/R$), from the measured input power.

NEMA Standard 3-3-1988

Alternatively, a digital power meter may be used that directly measures input system power without the need for correction.

Authorized Engineering Information 3-3-1988.

### 3.10 SAFETY PRECAUTIONS

It is recommended that if instruments with exposed current terminals are used, these terminals be connected to the ground side of the supply circuit. In those situations where neither of the two supply conductors are at ground potential, an isolation transformer should be interposed between the power source and the luminaire. The side of the circuit containing the instrument current coils should be connected to ground.

Alternately, other arrangements such as insulation of exposed terminals should be made to minimize shock hazard.

Further, when the grounding of one input terminal of an electronic instrument is necessary for its proper and safe operation, the use of an isolation transformer as described above may be required. If isolation transformers are used, their output should meet requirements of 3.5 and 3.6.

Authorized Engineering Information 3-3-1988.

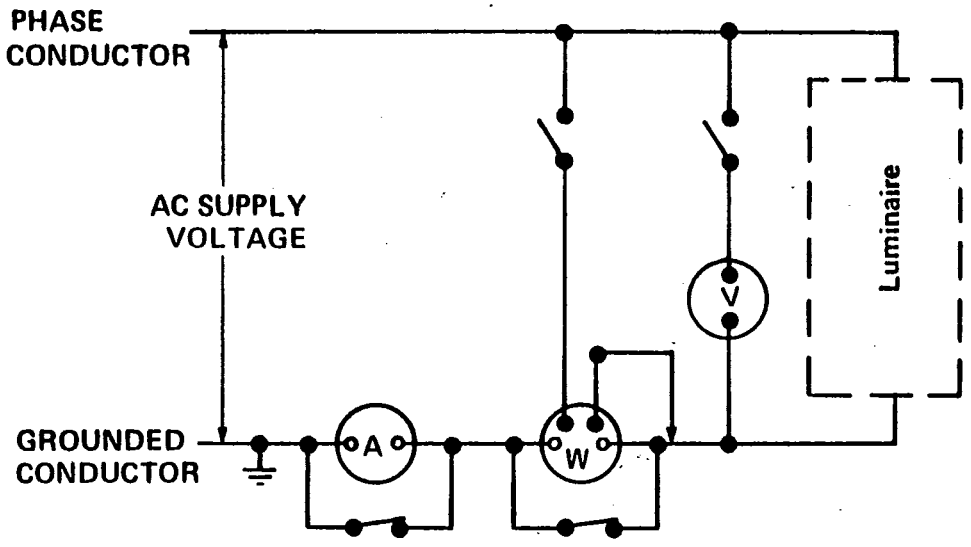


**Figure 3-1**
**RECOMMENDED CIRCUIT**

**NOTE: Current terminals are shown as o. Potential terminals of instruments are shown as ●.**

Copyright National Electrical Manufacturers Association
Provided by IHS under license with NEMA
No reproduction or networking permitted without license from IHS
Not for Resale

# Section 4
# TESTING PROCEDURES

## 4.1 GENERAL

The test procedure and instrumentation shall be in accordance with all applicable sections of the IES LM-41, except where explicitly described herein.

Test series shall consist of one fixture and any combination of various lamp(s), ballast(s), or any lamp/-ballast systems applicable to the given fixture.

For accuracy, it is essential that as many variables as possible be eliminated. The same ballast shall be used throughout that portion of the test series requiring this given type ballast. All tests requiring a given type lamp shall use the exact same lamp or set of lamps throughout the test series.

NEMA Standard 3-3-1988.

### 4.1.1 Base Test

The base test shall use standard ballast(s) and standard 40 watt rapid start lamp(s) as described in 2.2 and 2.5.

The standard ballast shall have a measured ballast factor which is certified to be in the range of .95 ±.025. Luminaires which contain three or four lamps shall be wired so that one ballast operates two outboard lamps and one ballast operates the inboard lamp(s). For all tests, the highest voltage from ground for the red and blue leads shall be placed in the same position for all tests with respect to ballast circuit and pin orientation with the high voltage leads.

NEMA Standard 3-3-1988.

As a recommended means to double check the validity and repeatability of the base test results, it is advisable to place a thermocouple on the bottom center of at least one lamp operated from each ballast in order to monitor bulb wall cold spot temperature.

Authorized Engineering Information 3-3-1988.

### 4.1.2 Testing Conditions

The test luminaire, recessed, or pendant-type, shall be mounted on the photometer stand or goniometer in accordance with IES LM-41.

A surface mounted luminaire is to be mounted on, and in conjunction with, the required "simulated ceiling board" (see 3.1.3) so as to simulate field-like conditions.Warm-up time shall be a minimum of four (4) hours or at a point in time where three (3) successive readings of input watts and light output taken at 15 minute intervals indicate a change of 1 percent or less.

With the test luminaire in its normal operating position, a head-on (nadir) reading shall be taken and the "light flux" recorded accordingly. Input watts shall be measured and recorded. (See Appendix A).

NEMA Standards 3-3-1988.

## 4.2 CALIBRATION OF LAMP(S)

Calibration is necessary to relate the light output of the lamps used in the test to the lamp manufacturer's lumen rating. This reading may also be used in the determination of the ballast factor. See 5.1 and 5.2.

Authorized Engineering Information 3-3-1988.

## 4.3 MEASUREMENT OF CALIBRATION FLUX

The test lamps shall be mounted in the calibration rack.

The test distance, the photodetector, the electrical instruments, the ambient temperature, the line voltage, and the basic procedure shall be the same as for the luminaire test.

NEMA Standard 3-3-1988.

Measurement(s) taken will not be that of lumens but simply a relative instrument reading referred to as a quantity of "light flux."

The ambient temperature should be kept constant at 25° C±1° C (77° F±1.8° F), and draft free in the vicinity of the calibration rack and lamps.

Lamps and ballasts should reach stable operating conditions before calibration readings are taken. This may be determined by observing when the electrical and light readings become constant and stable and may in extreme cases take several hours. If calibration readings are taken immediately following a photometric test, and the ballast(s) is already stable, less time will be required to reach stable operating conditions. A reading taken five minutes after restarting the lamps and thereafter in 15-minute intervals for a period of one hour is recommended as a minimum stabilization time. Stabilization may be considered achieved when there is a change of 1 percent or less in light output and input wattage readings taken over three successive 15-minute intervals.

Authorized Engineering Information 3-3-1988.

Copyright National Electrical Manufacturers Association
Provided by IHS under license with NEMA
No reproduction or networking permitted without license from IHS

Not for Resale

# Section 5
# CALCULATIONS

## 5.1 CALCULATION OF BALLAST FACTOR

Ballast factor should be calculated in the following comparative method:

$$BF_T = BF_B \times (CF_T \div CF_B)$$

Where

$BF_T$ = Ballast factor of ballast being tested (unknown ballast factor)

$BF_B$ = Ballast factor of base test ballast (known ballast factor)

$CF_T$ = Calibration Flux with ballast being tested

$CF_B$ = Calibration flux using same lamps as being used in test for which ballast factor is being calculated (same as used for $CF_T$) and operated on base ballast(s) used for $BF_B$.

Authorized Engineering Information 3-3-1988.

## 5.2 BALLAST FACTOR/ENERGY SAVING LAMPS

The average published ballast factor to be applied to CBM test ballasts when energizing 34/35 Watt T-12 energy saving lamps should be in accordance with Table 5-1.

Calculation of "Test Ballast Factor" (for use with energy saving 34/35 Watt T-12 lamps) should be as follows:

"Average Published Ballast" (for use with energy saving 34/35 Watt T-12 lamps in accordance with Table 5-1), divided by "Ballast Normalizing Factor."

Authorized Engineering Information 3-3-1988.

## 5.3 LAMP NORMALIZING FACTOR

"Lamp Normalizing Factor" shall be calculated as follows: "Published Rated Lamp Lumens" multiplied by the "Averaged Test Ballast Factor" divided by the "Calibration Flux."

NEMA Standard 3-3-1988.

## 5.4 BALLAST NORMALIZING FACTOR

The "Ballast Normalizing Factor" shall equal the "Published Average Ballast Factor," divided by the "Ballast Factor" of the test ballast or the "Averaged Test Ballast Factor" if more than one ballast is employed in the test.

NEMA Standard 3-3-1988.

## 5.5 NORMALIZED HEAD-ON FLUX

"Normalized Head-On Flux" shall be calculated as follows: "Head-On Flux" multiplied by the "Ballast Normalizing Factor" multiplied by the "Lamp Normalizing Factor."

NEMA Standard 3-3-1988.

## 5.6 COMPARATIVE LIGHT OUTPUT

Comparative light output shall equal "Normalized Head-On Flux" of test sample divided by "Normalized Head-On Flux" of base test. The percentage shall be shown as a whole number rounding up (0.5 to 0.9) or down (0.1 to 0.4) as required.

NEMA Standard 3-3-1988.

## 5.7 NORMALIZED WATTS INPUT

"Normalized Watts Input" shall equal "Measured Watts Input," multiplied by the "Ballast Normalizing Factor." This value shall be shown as a whole number.

NEMA Standard 3-3-1988.

## 5.8 COMPARATIVE WATTS INPUT

Comparative watts input shall equal "Normalized Watts Input" of the test sample divided by "Normalized Watts Input" of the base test. The percentage shall be shown as a whole number rounding up (0.5 to 0.9) or down (0.1 to 0.4) as required.

NEMA Standard 3-3-1988

Copyright National Electrical Manufacturers Association
Provided by IHS under license with NEMA
No reproduction or networking permitted without license from IHS
Not for Resale

## Table 5-1
## INDUSTRY AVERAGE BALLAST FACTORS

| Ballast Type | Lamp Type and Description | | | |
|---|---|---|---|---|
| | Standard 40 Watt T-12 | Low Energy 34/35 Watt T-12 | 32 Watt T-8 | 28 Watt T-12 |
| Standard Magnetic T-12 | .95 | .88 | -- | -- |
| Premium (Energy Saver) Magnetic T-12 | .95 | .88 | -- | -- |
| Premium Magnetic T-8 | -- | -- | .95 | -- |

Ballast factors shown are nominal values.

Individual ballasts may vary ± .025.

Ballast factors for lamp/ballast combinations not shown above should be obtained from the manufacturer or by actual laboratory measurements. (See 5.1 of this Standard.)(This note is approved as Authorized Engineering Information 3-3-1988.)

Copyright National Electrical Manufacturers Association
Provided by IHS under license with NEMA
No reproduction or networking permitted without license from IHS
Not for Resale

# Section 6
# REPORTING OF RESULTS

## 6.1 REPORTING FORMAT

A final report should contain the following information for each luminaire system tested (see Appendix A):

Authorized Engineering Information 3-3-1988.

### 6.1.1 Fixture Description

Catalog number and description of fixture including shielding media, length, width, depth, and mounting type, i.e. recessed, surface, or pendant.

When describing a surface mounted fixture, information should be provided on the size of the "simulated ceiling board," and its calculated R-factor (thermal resistance) and the exact means by which the luminaire is attached to the ceiling board. It is recommended that a detailed sketch be included in the report.

### 6.1.2 General Lamp/Ballast Description

General lamp/ballast description should contain:

1. Generic Lamp Type; and,
2. Generic Ballast Type.

### 6.1.3 Ballast Description

Ballast description should contain the following:

1. Manufacturer's Name;
2. Catalog Number of Ballast(s);
3. Voltage;
4. Description of Ballast(s);
5. Number of Ballast(s) Used in Test; and,
6. Ballast Factor.

Average published ballast factor should be shown, if available. When ballast factor is calculated, an asterisk (*) should be placed by the figure and sub-noted as follows:

"* Calculated Ballast Factor"

### 6.1.4 Lamp Description

Lamp description should contain the following:

1. Manufacturer;
2. Number of Lamps Used in Test;
3. Catalog Number of Lamps (including color); and,
4. Published Rated Lamp Lumens (Initial @ 100 hours).

### 6.1.5 Normalized Watts Input

For "Normalized Watts Input," see 5.7.

### 6.1.6 Comparative Watts Input

For "Comparative Watts Input," see 5.8. "Base Test" should be shown as "Base" 100 percent.

### 6.1.7 Comparative Light Output

For "Comparative Light Output," see 5.6. "Base Test" should be shown as "Base" 100 percent.

Authorized Engineering Information 3-3-1988.

Copyright National Electrical Manufacturers Association
Provided by IHS under license with NEMA
No reproduction or networking permitted without license from IHS
Not for Resale

# APPENDIX A

Appendix A contains sample worksheets and reporting format for testing fluorescent lamp/ballast/fixture performance comparisons.

## A-1 SAMPLE NEMA WORKSHEET

Test No. _____ Date _____ Tested By _____.

Fixture Description _____

[ ] Lamp(s) _____ Assigned Number _____

Published rated lumens _____

[ ] Ballast(s) _____ Assigned Number _____

Published rated average ballast factor = _____

Ballast Factor of Test Ballast No. _____ = _____

Ballast Factor of Test Ballast No. _____ = _____

Ballast Factor of Test Ballast No. _____ = _____

Averaged Test Ballast Factor = _____

| | | Published Average Ballast Factor | | Averaged Test Ballast Factor | |
|---|---|---|---|---|---|
| Ballast Normalizing Factor | = | ( ) | ÷ | ( ) | = ( ) |

Calibration Flux = _____

| | | Published Rated Lamp Lumens | | Averaged Test Ballast Factor | | Calibration Flux | |
|---|---|---|---|---|---|---|---|
| Lamp Normalizing Factor | = | ( ) | × | ( ) | ÷ | ( ) | = ( ) |

Head-On Flux = _____

| | | Head-On Flux | | Ballast Normalizing Factor | | Lamp Normalizing Factor | |
|---|---|---|---|---|---|---|---|
| Normalized Head-On Flux | = | ( ) | × | ( ) | × | ( ) | = ( ) |

Watts Input = _____

| | | Measured Watts Input | | Ballast Normalizing Factor | |
|---|---|---|---|---|---|
| Normalized Watts Input | = | ( ) | × | ( ) | = ( ) |

Copyright National Electrical Manufacturers Association
Provided by IHS under license with NEMA
No reproduction or networking permitted without license from IHS
Not for Resale

## A-2 EXAMPLE OF SAMPLE NEMA WORKSHEET

Test No. 5000-1 Date 02/21/84 Tested By Engineer Doe

Fixture Description Fluorescent Test Fixture (Refer to 6.1.1)

[ ] Lamp(s) Standard Lamp Manufacturer & Catalog No. Assigned Number Number xx

Published rated lumens 3150

[ ] Ballast(s) Standard Magnetic Manufacturer & Catalog No. Assigned Number _____

Published rated average ballast factor = 0.95

Ballast Factor of Test Ballast No. Number xy1 = 0.951

Ballast Factor of Test Ballast No. Number xy2 = 0.945

Ballast Factor of Test Ballast No. _____ = _____

Averaged Test Ballast Factor = 0.948

| | | Published Average Ballast Factor | | Averaged Test Ballast Factor | | |
|---|---|---|---|---|---|---|
| Ballast Normalizing Factor | = | ( 0.95 ) | ÷ | ( 0.948 ) | = | ( 1.002 ) |

Calibration Flux = 628

| | | Published Rated Lamp Lumens | | Averaged Test Ballast Factor | | Calibration Flux | | |
|---|---|---|---|---|---|---|---|---|
| Lamp Normalizing Factor | = | ( 3150 ) | × | ( 0.948 ) | ÷ | ( 628 ) | = | ( 4.76 ) |

Head-On Flux = 1486

| | | Head-On Flux | | Ballast Normalizing Factor | | Lamp Normalizing Factor | | |
|---|---|---|---|---|---|---|---|---|
| Normalized Head-On Flux | = | ( 1486 ) | × | ( 1.002 ) | × | ( 4.76 ) | = | ( 7088 ) |

Watts Input = 177.6

| | | Measured Watts Input | | Ballast Normalizing Factor | | |
|---|---|---|---|---|---|---|
| Normalized Watts Input | = | ( 177.6 ) | × | ( 1.002 ) | = | ( 178 ) |

Copyright National Electrical Manufacturers Association
Provided by IHS under license with NEMA
No reproduction or networking permitted without license from IHS
Not for Resale

## A-3 EXAMPLE OF SAMPLE NEMA WORKSHEET

Test No. 5000-2 Date 2/21/84 Tested By Engineer Doe

Fixture Description Fluorescent Test Fixture (Refer to 6.1.1)

[ ] Lamp(s) Manufacturer & Catalog No. 34W—Energy Saving Assigned Number Number yx

Published rated lumens 2925

[ ] Ballast(s) Premium Magnetic Manufacturer & Catalog No. Assigned Number

Published rated average ballast factor = 0.95 (40W Lamp) 0.88 (34W, ES Lamp)

Ballast Factor of Test Ballast No. Number yx1 = 0.944 (40W)

Ballast Factor of Test Ballast No. Number yx2 = 0.942 (40W)

Ballast Factor of Test Ballast No. = 

Averaged Test Ballast Factor = 0.943 (0.874 per Section 5.2)

| | | Published Average Ballast Factor | | Averaged Test Ballast Factor | | |
|---|---|---|---|---|---|---|
| Ballast Normalizing Factor | = | ( 0.95 ) | ÷ | ( 0.943 ) | = | ( 1.007 ) |

Calibration Flux = 553

| | | Published Rated Lamp Lumens | | Averaged Test Ballast Factor | | Calibration Flux | | |
|---|---|---|---|---|---|---|---|---|
| Lamp Normalizing Factor | = | ( 2925 ) | × | ( 0.874 ) | ÷ | ( 553 ) | = | ( 4.62 ) |

Head-On Flux = 1414

| | | Head-On Flux | | Ballast Normalizing Factor | | Lamp Normalizing Factor | | |
|---|---|---|---|---|---|---|---|---|
| Normalized Head-On Flux | = | ( 1414 ) | × | ( 1.007 ) | × | ( 4.62 ) | = | ( 6578 ) |

Watts Input = 141

| | | Measured Watts Input | | Ballast Normalizing Factor | | |
|---|---|---|---|---|---|---|
| Normalized Watts Input | = | ( 141 ) | × | ( 1.007 ) | = | ( 142 ) |

Copyright National Electrical Manufacturers Association
Provided by IHS under license with NEMA
No reproduction or networking permitted without license from IHS
Not for Resale

## A-4 EXAMPLE OF SAMPLE NEMA WORKSHEET

Test No. 5000-3 Date 02/22/84 Tested By Engineer Doe

Fixture Description Fluorescent Test Fixture (Refer to 6.1.1)

[ ] Lamp(s) T-8 Lamp Manufacturer & Catalog No. Assigned Number Number zz

Published rated lumens 2900

[ ] Ballast(s) Premium Magnetic T-8 Ballast Manufacturer & Catalog No. Assigned Number Number zx

Published rated average ballast factor = 0.94

Ballast Factor of Test Ballast No. Number zx1 = 0.938

Ballast Factor of Test Ballast No. Number zx2 = 0.942

Ballast Factor of Test Ballast No. _____ = _____

Averaged Test Ballast Factor = 0.94

| | | Published Average Ballast Factor | | Averaged Test Ballast Factor | | |
|---|---|---|---|---|---|---|
| Ballast Normalizing Factor | = | ( 0.95 ) | ÷ | ( 0.94 ) | = | ( 1.011 ) |

Calibration Flux = 619

| | | Published Rated Lamp Lumens | | Averaged Test Ballast Factor | | Calibration Flux | | |
|---|---|---|---|---|---|---|---|---|
| Lamp Normalizing Factor | = | ( 2900 ) | × | ( .094 ) | ÷ | ( 619 ) | = | ( 4.40 ) |

Head-On Flux = 1609

| | | Head-On Flux | | Ballast Normalizing Factor | | Lamp Normalizing Factor | | |
|---|---|---|---|---|---|---|---|---|
| Normalized Head-On Flux | = | ( 1609 ) | × | ( 1.011 ) | × | ( 4.40 ) | = | ( 7157 ) |

Watts Input = 132.5

| | | Measured Watts Input | | Ballast Normalizing Factor | | |
|---|---|---|---|---|---|---|
| Normalized Watts Input | = | ( 132.5 ) | × | ( 1.011 ) | = | ( 134 ) |

Copyright National Electrical Manufacturers Association
Provided by IHS under license with NEMA
No reproduction or networking permitted without license from IHS
Not for Resale

## A-5 EXAMPLE OF SAMPLE NEMA WORKSHEET

Test No 5000-4 Date 02/22/84 Tested By Engineer Doe

Fixture Description Fluorescent Test Fixture (Refer to 6.1.1)

[ ] Lamp(s) 34W Energy Saving Manufacturer & Catalog No. Assigned Number Number yx

Published rated lumens 2925

[ ] Ballast(s) High Frequency Manufacturer & Catalog No. Assigned Number Number wy

Published rated average ballast factor = None

Ballast Factor of Test Ballast No. See below = N/A

Ballast Factor of Test Ballast No. See below = N/A

Ballast Factor of Test Ballast No. _____ = _____

Averaged Test Ballast Factor = Calculated 0.77

| | | Published Average Ballast Control | | Averaged Test Ballast Factor | [Section 5.1 used] $[BF_T = .874 \times 487 - 553 = .77]$ |
|---|---|---|---|---|---|
| Ballast Normalizing Factor | = | ( None ) | ÷ | ( None ) | = ( 1.0 ) |

Calibration Flux = 487

| | | Published Rated Lamp Lumens | | Averaged Test Ballast Factor | | Calibration Flux | |
|---|---|---|---|---|---|---|---|
| Lamp Normalizing Factor | = | ( 2925 ) | × | ( 0.77 ) | ÷ | ( 487 ) | = ( 4.62 ) |

Head-On Flux = 1302

| | | Head-On Flux | | Ballast Normalizing Factor | | Lamp Normalizing Factor | |
|---|---|---|---|---|---|---|---|
| Normalized Head-On Flux | = | ( 1302 ) | × | ( 1.0 ) | × | ( 4.62 ) | = ( 6015 ) |

Watts Input = 115

| | | Measured Watts Input | | Ballast Normalizing Factor | |
|---|---|---|---|---|---|
| Normalized Watts Input | = | ( 115 ) | × | ( 1.0 ) | = ( 115 ) |

Copyright National Electrical Manufacturers Association
Provided by IHS under license with NEMA
No reproduction or networking permitted without license from IHS
Not for Resale

Copyright National Electrical Manufacturers Association
Provided by IHS under license with NEMA
No reproduction or networking permitted without license from IHS

## A-6
## SAMPLE REPORTING FORMAT
## NEMA "FLUORESCENT LAMP/BALLAST/FIXTURE PERFORMANCE COMPARISON"

*(Fluorescent Test Fixture as Detailed in Section 6.1.1)*
*Ambient Temperature 25°C*

| Test Number | General Description | Ballast | Lamp | Normalized Watts Input | Comparative Watts Input | Comparative Light Output |
|---|---|---|---|---|---|---|
| | Lamp<br>Ballast | Manufacturer<br>Catalog Number<br>Ballast Factor | Manufacturer<br>Catalog Number<br>Rated Lumens | | | |
| 1 | standard T-12<br>standard magnetic | trade name<br>catalog number<br>ballast factor | brand A F40<br>cool white xx<br>3150 | 178 | Base 100% | Base 100% |
| 2 | energy saving T-12<br>premium magnetic | trade name<br>catalog number<br>ballast factor | brand C F40<br>LW/RS 34 Watt<br>2925 | 142 | 80% | 93% |
| 3 | *32 watt T-8<br>premium magnetic T-8 | trade name<br>catalog number<br>ballast factor | brand B 32W<br>T-8/41K<br>2900 | 134 | 75% | 101% |
| 4 | energy saving T-12<br>electronic | trade name<br>catalog number<br>ballast factor | brand C F40<br>LW/RS 34 Watt<br>2925 | 115 | 65% | 85% |

*Comparison of T-8 and T-12 lamps may provide slightly less accurate results. (This note approved as Authorized Engineering Information 3-3-1988.)

Not for Resale

# INDOOR LIGHTING SECTION
# OF THE
# NATIONAL ELECTRICAL MANUFACTURERS ASSOCIATION

## MEMBER COMPANIES

Abolite Lighting, Inc.
West Lafayette, OH 43845

American Electric
FL Industries, Inc.
Southaven, MS 38571

Cooper Lighting Group
Elk Grove Village, IL 60007

Day-Brite Lighting Division
Emerson Electric Company
Tupelo, MS 38801

Duro-Test Corporation
North Bergen, NJ 07047

GE Company
Lighting Systems Business Department
Hendersonville, NC 28739

The Genlyte Group
Lightolier, Inc.
Secaucus, NJ 07094

Guth Lighting
Division of Jac Jacobsen Industries
St. Louis, MO 63177

Hanson Industries
San Leandro, CA 94577

Holophane
Division of the Manville Products Corporation
Denver, CO 80217

Hubbell Lighting Division
Hubbell Incorporated
Christiansburg, VA 24073

The Kirlin Company
Detroit, MI 48207

Lithonia Lighting
Conyers, GA 30207

Paramount Industries, Inc.
Croswell Division
Croswell, MI 48422

Siemens Corporate Research & Support, Inc.
Iselin, NJ 08830

Sylvania Lighting Equipment
GTE Products Corporation
Fall River, MA 02724

Copyright National Electrical Manufacturers Association
Provided by IHS under license with NEMA
No reproduction or networking permitted without license from IHS


Not for Resale

# NEMA STANDARDIZATION

The purpose of NEMA Standards, their classification and status, are set forth in certain clauses of the NEMA *Standardization Policies and Procedures* manual and are referenced below.

## Purpose of Standards

National Electrical Manufacturers Association Standards are adopted in the public interest and are designed to eliminate misunderstandings between the manufacturer and the purchaser and to assist the purchaser in selecting and obtaining the proper product for its particular need. Existence of a National Electrical Manufacturers Association Standard does not in any respect preclude any member or nonmember from manufacturing or selling products not conforming to the standard. *(Standardization Policies and Procedures, p. 1)*

## Definition of a Standard

A standard of the National Electrical Manufacturers Association defines a product, process, or procedure with reference to one or more of the following: nomenclature, composition, construction, dimensions, tolerances, safety, operating characteristics, performance, rating, testing, and the service for which they are designed.
*(Standardization Policies and Procedures, p. 2)*

## Dimensions

Where dimensions are given for interchangeability purposes, alternate dimensions satisfying the other provisions of the standards publication may be capable of otherwise equivalent performance.
*(Standardization Policies and Procedures, p. 9)*

## Classes of Standards

National Electrical Manufacturers Association Standards are of two classes:

1. NEMA Standard, which relates to a product commercially standardized and subject to repetitive manufacture, which standard has been approved by at least 90 percent of the members of the Subdivision eligible to vote thereon;
2. Suggested Standard for Future Design, which may not have been regularly applied to a commercial product, but which suggests a sound engineering approach to future development, which standard has been approved by at least two-thirds of the members of the Subdivision eligible to vote thereon.

*(Standardization Policies and Procedures, pp. 8 & 17)*

## Authorized Engineering Information

Authorized Engineering Information consists of explanatory data and other engineering information of an informative character not falling within the classification of NEMA Standard or Suggested Standard for Future Design, which standard has been approved by at least two-thirds of the members of the Subdivision eligible to vote on the standard.
*(Standardization Policies and Procedures, pp. 8 & 17)*

## Official Standards Proposal

An Official Standards Proposal is an official draft of a proposed standard which is formally recommended to an outside organization(s) for consideration, comment, and/or approval, and which has been approved by at least 90 percent of the members of the Subdivision eligible to vote thereon.
*(Standardization Policies and Procedures, pp. 8 & 17)*

## Identification of Status

Standards in NEMA Standards Publications are identified in the foreword or following each standard as "NEMA Standard" or "Suggested Standard for Future Design." These indicate the status of the standard. These words are followed by a date which indicates when the standard was adopted in its present form by the Association.

The material identified as "Authorized Engineering Information" and "Official Standards Proposal" is designated similarly.

Copyright National Electrical Manufacturers Association
Provided by IHS under license with NEMA
No reproduction or networking permitted without license from IHS


Not for Resale