NEMA STANDARDS PUBLICATION

ANSI/NEMA 250

ENCLOSURES FOR ELECTRICAL EQUIPMENT (1000 VOLTS MAXIMUM)

NATIONAL ELECTRICAL MANUFACTURERS ASSOCIATION

Copyright National Electrical Manufacturers Association
Provided by IHS under license with NEMA
No reproduction or networking permitted without license from IHS

Not for Resale



ANSI Approval Date
August 30, 2001

NEMA Standards Publication No. ANSI/NEMA 250-1997

Enclosures for Electrical Equipment (1000 Volts Maximum)

Published by:

National Electrical Manufacturers Association
1300 North 17th Street, Suite 1847
Rosslyn, VA 22209

© Copyright 2001 by the National Electrical Manufacturers Association. All rights including translation into other languages, reserved under the Universal Copyright Convention, the Berne Convention for the Protection of Literary and Artistic Works, and the International and Pan American Copyright Conventions.

Copyright National Electrical Manufacturers Association
Provided by IHS under license with NEMA
No reproduction or networking permitted without license from IHS
Not for Resale

NOTICE AND DISCLAIMER

The information in this publication was considered technically sound by the consensus of persons engaged in the development and approval of the document at the time it was developed. Consensus does not necessarily mean that there is unanimous agreement among every person participating in the development of this document.

The National Electrical Manufacturers Association (NEMA) standards and guideline publications, of which the document contained herein is one, are developed through a voluntary consensus standards development process. This process brings together volunteers and/or seeks out the views of persons who have an interest in the topic covered by this publication. While NEMA administers the process and establishes rules to promote fairness in the development of consensus, it does not write the document and it does not independently test, evaluate, or verify the accuracy or completeness of any information or the soundness of any judgments contained in its standards and guideline publications.

NEMA disclaims liability for any personal injury, property, or other damages of any nature whatsoever, whether special, indirect, consequential, or compensatory, directly or indirectly resulting from the publication, use of, application, or reliance on this document. NEMA disclaims and makes no guaranty or warranty, expressed or implied, as to the accuracy or completeness of any information published herein, and disclaims and makes no warranty that the information in this document will fulfill any of your particular purposes or needs. NEMA does not undertake to guarantee the performance of any individual manufacturer or seller's products or services by virtue of this standard or guide.

In publishing and making this document available, NEMA is not undertaking to render professional or other services for or on behalf of any person or entity, nor is NEMA undertaking to perform any duty owed by any person or entity to someone else. Anyone using this document should rely on his or her own independent judgment or, as appropriate, seek the advice of a competent professional in determining the exercise of reasonable care in any given circumstances. Information and other standards on the topic covered by this publication may be available from other sources, which the user may wish to consult for additional views or information not covered by this publication.

NEMA has no power, nor does it undertake to police or enforce compliance with the contents of this document. NEMA does not certify, test, or inspect products, designs, or installations for safety or health purposes. Any certification or other statement of compliance with any health or safety–related information in this document shall not be attributable to NEMA and is solely the responsibility of the certifier or maker of the statement.

Copyright National Electrical Manufacturers Association
Provided by IHS under license with NEMA
No reproduction or networking permitted without license from IHS
Not for Resale

TABLE OF CONTENTS

FOREWORD iv

SECTION 1 GENERAL 1

1.1 SCOPE 1
1.2 REFERENCES 1
1.2.1 Normative References 1
1.3 DEFINITIONS 3

SECTION 2 ENCLOSURE TYPES, FEATURES, AND APPLICATIONS 5

2.1 GENERAL 5
2.2 SPECIFIC TYPES 5

SECTION 3 CONSTRUCTION 9

3.1 GENERAL 9
3.2 UNITS OF MEASUREMENT 9
3.3 MATERIALS – GENERAL 9
3.4 MATERIALS – POLYMERIC 9
3.5 CORROSION PROTECTION – GENERAL 9
3.5.1 Indoor Corrosion Protection 9
3.5.2 Outdoor Corrosion Protection 10
3.5.3 Annealed Coating 10
3.5.4 Bends and Forms on Zinc Coatings 10
3.5.5 Hot Dipped Galvanized Damage 11
3.5.6 Cast Iron 11
3.5.7 Type 4X Corrosion Protection 11
3.6 OPENINGS 11
3.6.1 Equipment Openings 11
3.6.2 Ventilation 11
3.6.3 Drainage Openings 11
3.7 MOUNTING 12
3.8 CONDUIT CONNECTION 12
3.9 HUBS AND FITTINGS 12
3.10 KNOCKOUTS 12
3.11 EXTERNAL OPERATING MECHANISMS 13
3.12 ACCESS TO INTERIOR 13
3.13 CLOSING HARDWARE 13
3.14 GASKETS 13
3.15 OBSERVATION WINDOWS 14

SECTION 4 MARKING 15

4.1 TYPE DESIGNATIONS 15
4.2 SUPPLEMENTAL MARKINGS 15
4.3 LOCATION OF MARKINGS 15
4.4 ENCLOSURE ORIENTATION 15
4.5 CONDUIT HUBS and CLOSURE PLATES 15
4.6 EQUIPMENT OPENINGS 16
4.7 DRAINAGE OPENINGS 16

SECTION 5 DESIGN TESTS 17

5.1 GENERAL 17
5.2 ROD ENTRY TEST 18
5.2.1 Non-ventilated Enclosures Test Method 18

Copyright National Electrical Manufacturers Association
Provided by IHS under license with NEMA
No reproduction or networking permitted without license from IHS
Not for Resale

5.2.2 Ventilated Enclosures Test Method 19
5.2.3 Evaluation 19
5.3 DRIP TEST 19
5.3.1 Method A 19
5.3.2 Method B 19
5.3.3 Evaluation 19
5.4 RAIN TEST 19
5.4.1 Method 19
5.4.2 Evaluation 20
5.5 DUST TEST 23
5.5.1 Outdoor Dust Test 23
5.5.2 Indoor Dust Tests 24
5.6 EXTERNAL ICING TEST 25
5.6.1 Test Method 25
5.6.2 Evaluation 26
5.7 HOSEDOWN TEST 26
5.7.1 Test Method 26
5.7.2 Evaluation 26
5.8 Indoor Corrosion Protection (Rust-Resistance Test (24-Hour Salt Spray Test)) 26
5.8.1 Test Equipment 26
5.8.2 Salt Solution 27
5.8.3 Air Supply 27
5.8.4 Temperature 27
5.8.5 Test Procedure 27
5.8.6 Evaluation 27
5.9 OUTDOOR CORROSION PROTECTION 27
5.9.1 600 Hour Salt Spray Test 27
5.9.2 Evaluation 27
5.9.3 1200 Hour Moist Carbon Dioxide - Sulfur Dioxide - Air Test 27
5.10 TYPE 4X CORROSION PROTECTION 28
5.10.1 Evaluation 28
5.11 SUBMERSION TEST 28
5.11.1 Test Method 28
5.11.2 Evaluation 28
5.12 PRESSURE TEST 28
5.12.1 Alternate Tests 28
5.13 OIL EXCLUSION TEST 29
5.13.1 Test Method 29
5.13.2 Evaluation 29
5.14 GASKET TESTS 29
5.14.1 Aging Test 29
5.14.2 Evaluation 30
5.14.3 Oil immersion test 30

APPENDIX A 31

Copyright National Electrical Manufacturers Association
Provided by IHS under license with NEMA
No reproduction or networking permitted without license from IHS
Not for Resale

FOREWORD

This Standards Publication covers the classification and description of enclosures for electrical equipment. Enclosures for rotating apparatus have not been included. The primary purpose of this publication is to permit a potential user to determine:

1. The type of enclosure appropriate for the application.
2. The features the enclosure is expected to have.
3. The tests applied to the enclosure to demonstrate its conformance to the description.

These standards are used by the electrical industry to provide guidelines for the manufacture and proper application of enclosures and to promote the benefits of repetitive manufacturing and widespread enclosure availability.

Each type of enclosure is described in general and functional terms where practicable, and omits reference to structural details and specific applications except where they are essential to the identification of the enclosure type. For such structural details and specific applications, see the appropriate NEMA product standards publication.

Individual product standards publications incorporating enclosure construction unique to the product design may reflect the type of designations contained herein provided the design tests for such construction equal or exceed the requirements of these Standards Publication.

User needs have been considered throughout the development of this publication. Proposed or recommended revisions should be submitted to:

Vice President
Engineering Department
National Electrical Manufacturers Association
1300 N. 17th Street
Suite 1847
Rosslyn, VA 22209

Publication 250-1997 revises and supersedes Publication 250-1991.

This Standards Publication was developed by the NEMA Sections listed below. Section approval of the standard does not necessarily imply that all section members voted for its approval or participated in its development. At the time it was approved, the Sections were composed of the following members:

INDUSTRIAL CONTROL & SYSTEMS SECTION

ABB Control, Inc.—Wichita Falls, TX
Automatic Switch Company—Florham Park, NJ
Baldor Electric Company—Woodinville, WA
Balluff, Inc.—Florence, KY
Bussmann Div/Cooper Indust.—Ellisville, MO
CEGELEC Automation Inc.—Pittsburgh, PA
Control Concepts Corporation—Beaver, PA
Cutler-Hammer, Inc.—Milwaukee, WI
Cyberex, Inc.—Mentor, OH
Eaton Corporation-Cutler Hammer—Milwaukee, WI
Echelon—Palo Alto, CA
Electrical Power Systems, Inc.—Tulsa, OK
Electro Switch Corporation—Weymouth, MA
Elliott Control Company—Hollister, CA
Emerson Electric Company—Grand Island, NY

Copyright National Electrical Manufacturers Association
Provided by IHS under license with NEMA
No reproduction or networking permitted without license from IHS
Not for Resale

Entrelec, Inc—Irving, TX
Firetrol, Inc.—Cary, NC
GE—Plainville, CT
General Equipment & Mfg. Co., Inc.—Louisville, KY
Gettys Corporation—Amherst, NY
Giddings & Lewis, Inc.—Fond Du Lac, WI
Harnischfeger Corportion—Milwaukee, WI
Honeywell IAD—Ft. Washington, PA
Hubbell Incorporated—Madison, OH
Joslyn Clark Controls, Inc.—Lancaster, SC
Killark Electric Mfg. Company—St. Louis, MO
Klockner-Moeller Corporation—Franklin, MA
Lexington Switch & Controls—Madison, OH
MagneTek, Inc.—New Berlin, WI
Master Control Systems, Inc.—Lake Bluff, IL
Metron, Inc.—Denver, CO
Micro Switch—Freeport, IL
O-Z Gedney/Unit Of General Signal
Corporation—Tulsa, OK
Omron Electronics, Inc.—Schaumburg, IL
Onan Corporation—Minneapolis, MN
Pepperl + Fuchs, Inc.—Twinsburg, OH
Phoenix Contact, Inc.—Harrisburg, PA
R Stahl, Inc.—Woburn, MA
Reliance Electric Co./Rockwell Automation—Euclid, OH
Rittal Corporation—Springfield, OH
Robicon—New Kensington, PA
Rockwell Automation—Milwaukee, WI
Russelectric, Inc.—Hingham, MA
Siemens Energy & Automation, Inc.—Alpharetta, GA
Siemens-Furnas Controls—Batavia, IL
Sprecher & Schuh, Inc.—Houston, TX
Square D Company—Lexington, KY
Texas Instruments, Inc.—Dallas, TX
Toshiba International Corporation—Houston, TX
Turck, Inc.—Minneapolis, MN
WAGO Corporation—Brown Deer, WI
Yaskawa Electric America, Inc.—Northbrook, IL
Zenith Controls, Incorporated—Chicago, IL

MOLDED CASE BREAKER SECTION

ABB Control, Inc.—Wichita Falls, TX
American Circuit Breaker Corp.—Albemarle, NC
GE—Farmington, CT
Cutler-Hammer Inc.—Pittsburgh, PA
Klockner-Moeller Corporation—Franklin, MA
Siemens Energy & Automation, Inc.—Norcross, GA
SPD Technologies—Philadelphia, PA
Square D Company—Cedar Rapids, IA
Thomas & Betts Corporation—Memphis, TN

CONDUIT FITTINGS SECTION

Adalet-Plm—Cleveland, OH
Appleton Electric Company—Chicago, IL
Arlington Industries, Inc.—Scranton, PA
Bridgeport Fittings, Inc.—Bridgeport, CT
Crouse Hinds Division—Syracuse, NY
Erico, Inc.—Solon, OH
Halex Company, The—Cleveland, OH
Hubbell Incorporated—Bridgeport, CT

Copyright National Electrical Manufacturers Association
Provided by IHS under license with NEMA
No reproduction or networking permitted without license from IHS
Not for Resale

Killark Electric Mfg. Company—St Louis, MO
Minerallac Company—Addison, IL
Myers Electric Products, Inc.—Fullerton, CA
Neer Manufacturing Company, Inc.—Lexington, OH
O-Z Gedney—Terryville, CT
Pass & Seymour/Legrand—Syracuse, NY
Producto Electric Corporation—Orangeburg, NY
Progressive Machine Die, Inc.—Walton Hills, OH
Raco, Inc.—South Bend, IN
Red Dot Division—Boston, MA
Regal Manufacturing—Industry, CA
Steel City—Memphis, TN
Steel Electric Products Co, Inc.—Brooklyn, NY
The Halex Company—Cleveland, OH
Thepitt Manufacturing Co., Inc.—Meadow Lands, PA
Thomas & Betts Corporation—Memphis, TN

SWITCH SECTION

American Circuit Breaker Corp—Albemarle, NC
Boltswitch, Inc.—Crystal Lake, IL
Bussmann Div/Cooper Industries—St. Louis, MO
Cutler-Hammer Inc.—Pittsburgh, PA
GE—Plainville, CT
Hubbell Incorporated—Bridgeport, CT
Pringle Electrical Mfg. Co., The—Fort Washington, PA
Siemens Energy & Automation, Inc.—Norcross, GA
Square D Company—Lexington, KY
Test Switch Technology, Inc.—Canton, OH
Thomas & Betts Corporation—Memphis, TN

PANELBOARD AND DISTRIBUTION BOARD SECTION

American Circuit Breaker Corp.—Albemarle, NC
B-Line Systems, Inc.—Portland, OR
Lamson & Sessions Company—Cleveland, OH
Current Technology, Inc.—Irving, TX
Cutler-Hammer Inc.—Pittsburgh, PA
GE—Plainville, CT
Hubbell Incorporated—Bridgeport, CT
Milbank Manufacturing Company—Kansas City, MO
Penn Panel & Box Company—Collingdale, PA
Pringle Electrical Mfg. Co., The—Fort Washington, PA
Siemens Energy & Automation, Inc.—Grand Prairie, TX
Square D Company—Lexington, KY
The Durham Company—Lebanon, MO
Thomas & Betts Corporation—Memphis, TN

PIN & SLEEVE PLUG, RECEPTACLE & CONNECTOR SECTION

Adalet-Plm—Cleveland, OH
Appleton Electric Company—Chicago, IL
Arrow Hart Wiring Devices—Syracuse, NY
Bryant Electric, Inc.—Milford, CT
Crouse Hinds Division—Syracuse, NY
Hubbell Incorporated—Bridgeport, CT
Joy Molded Rubber Prod./Div. of
Cooper Industries—Lagrange, NC
Killark Electric Mfg. Company—St Louis, MO
Meltric Corporation—Cudahy, WI

Copyright National Electrical Manufacturers Association
Provided by IHS under license with NEMA
No reproduction or networking permitted without license from IHS
Not for Resale

Pass & Seymour/Legrand—Syracuse, NY
R Stahl, Inc.—Woburn, MA
Thomas & Betts – MIPCO—Brooksville, FL
Thomas & Betts Corporation—Memphis, TN
W.T. Storey Inc.—Dalmatia, PA

STEEL RIGID CONDUIT & ELEC. METALLIC TUBING SECTION

Allied Tube & Conduit Corporation—Harvey, IL
Conduit Pipe Products—Westerville, OH
LTV Steel Tubular Products Co.—Youngstown, OH
OCAL, Inc.—Van Nuys, CA
Perma-Cote Industries—Uniontown, PA
Picoma Industries, Inc.—Waynesboro, PA
Robroy Industries, Inc.—Verona, PA
Shamrock Conduit Products, Inc.—Barnesville, OH
Western Tube & Conduit Corp.—Long Beach, CA
Wheatland Tube Company—Collingswood, NJ

WIRING DEVICE SECTION

AMP Incorporated—Harrisburg, PA
Arrow Hart Wiring Devices—Syracuse, NY
Bryant Electric, Inc.—Milford, CT
Carlon Electrical Products—Cleveland, OH
Daniel Woodhead Company—Northbrook, IL
Eagle Electric Mfg. Company, Inc.—Long Island City, NY
Ericson Manufacturing Company —Willoughby, OH
GE—Warwick, RI
Hubbell Incorporated—Bridgeport, CT
Leviton Manufacturing Company, Inc.—Little Neck, NY
Lutron Electronics Company, Inc.—Coopersburg, PA
Marinco/Marine Industries Company—Napa, CA
McGill Electrical Product Group—Valparaiso, IN
MYTECH Corporation—Austin, TX
Pass & Seymour/Legrand—Syracuse, NY
Steel City—Memphis, TN
Technology Research Corporation—Clearwater, FL
The Wiremold Company—West Hartford,
UNENCO Services, Inc.—Alameda, CA
Watt Stopper, Inc, The—Santa Clara, CA
Wiremold Company, The—West Hartford, CT

ELECTRICAL MEASURING EQUIPMENT SECTION

ABB Power T & D Company Inc.—Raleigh, NC
APTECH, Inc.—Charlotte, NC
B-Line Systems, Inc.—Portland, OR
GE—Somersworth, NH
Meter Devices Company, Inc.—Canton, OH
Milbank Manufacturing Company—Kansas City, MO
Siemens Energy & Automation, Inc.—Norcross, GA
Square D Company—Lexington, KY
The Durham Company—Lebanon, MO
Thomas & Betts Corporation—Memphis, TN

Copyright National Electrical Manufacturers Association
Provided by IHS under license with NEMA
No reproduction or networking permitted without license from IHS
Not for Resale

--`,,`,-`-`,,`,,`,`,,`---

Copyright National Electrical Manufacturers Association
Provided by IHS under license with NEMA
No reproduction or networking permitted without license from IHS

Not for Resale

Section 1
GENERAL

1.1 SCOPE

This standard covers enclosures for electrical equipment rated not more than 1000 Volts and intended to be installed and used as follows:

a. Non-hazardous locations
   1. Enclosures for indoor locations, Types 1, 2, 5, 12, 12K, and 13; and
   2. Enclosures for indoor or outdoor locations, Types 3, 3R, 3S, 4, 4X, 6, and 6P.

b. Hazardous locations
   1. Enclosures for indoor locations, Types 7 and 9;
   2. Enclosures for indoor or outdoor locations, Type 8; and
   3. Enclosures for mining applications, Type 10.

Requirements for enclosures for non-hazardous locations are contained in the body of the standard. Requirements for enclosures for hazardous locations are contained in Supplement A of the standard.

This standard covers the requirements to provide protection to the enclosed equipment against specific environmental conditions.

This standard supplements requirements for enclosures that are contained in the individual product standards.

This standard does not cover the requirements for protection of devices against conditions such as condensation, icing, corrosion, or contamination which may occur within the enclosure or which may enter via conduit or unsealed openings.

A product that contains features, characteristics, components, materials, or systems new or different from those in use when the standard was developed, and that involves a risk of fire, electric shock, or injury to persons shall be evaluated using the appropriate additional component and end-product requirements as determined necessary to maintain the level of safety for the user of the product as originally anticipated by the intent of this standard.

1.2 REFERENCES

The following publications are adopted in part, by reference in this publication, and are available from the organizations below.

1.2.1 Normative References

The following normative documents contain provisions, which through reference in this text, constitute provisions of this Standards Publication. By reference herein these publications are adopted, in whole or in part as indicated, in this SP.

American National Standards Institute (ANSI)
11 West 42nd Street
New York, NY 10036

American Society of Mechanical Engineers (ASME)
345 East 47th Street
New York, NY 10017-2392

ANSI/ASME B1.20.1	*Pipe Threads, General Purpose (Inch)*
ANSI/ASME B94.11M	*Twist Drills*

Copyright National Electrical Manufacturers Association
Provided by IHS under license with NEMA
No reproduction or networking permitted without license from IHS
Not for Resale

American Society for Testing and Materials (ASTM)
100 Barr Harbor Drive
West Conshohocken, PA 19428

ASTM A 653/A 653M	*Standard Specification for Steel Sheet, Zinc-Coated (Galvanized) or Zinc-Iron Alloy-Coated (Galvannealed) by the Hot-Dip Process*
ASTM B117	*Salt Fog Testing*
ASTM B555	*Standard Guide for Measurement of Electrodeposited Metallic Coating Thickness by the Dropping Test*
ASTM D471	*Rubber Property-Effect of Liquids*
ASTM ES27	*Rubber-Establishing Replacement Immersion Reference Oils for ASTM No. 2 and No. 3 Immersion Oils Used in Test Method D471*

International Electrotechnical Commission (IEC)
3, rue de Varembé
P.O. Box 131
1211 Geneva 20
Switzerland

IEC 529	*Degrees of protection provided by enclosures (IP Code)*

National Electrical Manufacturers Association (NEMA)
1300 North 17th Street, Suite 1847
Rosslyn, VA 22209

National Fire Protection Association (NFPA)
1 Batterymarch Park
PO Box 9101
Quincy, MA 02269

ANSI/NFPA 70	*National Electrical Code*
ANSI/NFPA 496	*Purged and Pressurized Enclosures for Electrical Equipment*
ANSI/NFPA 497M	*Classification of Gases, Vapors and Dust for Electrical Equipment in Hazardous (Classified) Locations*

Superintendent of Documents
US Government Printing Office
Washington, DC 20402

30 CFR Part 18	*Electric Motor-Driven Mine Equipment and Accessories*

Underwriters Laboratories Inc. (UL)
333 Pfingsten Road
Northbrook, IL 60062

ANSI/UL 50	*Enclosures for Electrical Equipment*
ANSI/UL 94	*Tests for Flammability of Plastics Materials for Parts in Devices and Appliance*
ANSI/UL 514B	*Fittings for Conduit and Outlet Boxes*
ANSI/UL 698	*Industrial Control Equipment for Use in Hazardous (Classified) Locations*
ANSI/UL 746C	*Polymeric Materials - Use in Electrical Equipment Evaluations*
ANSI/UL 877	*Circuit Breakers and Circuit-Breaker Enclosures for Use in Hazardous (Classified) Locations*
ANSI/UL 886	*Outlet Boxes and Fittings for Use in Hazardous (Classified) Locations*
ANSI/UL 894	*Switches for Use in Hazardous (Classified) Locations*

Copyright National Electrical Manufacturers Association
Provided by IHS under license with NEMA
No reproduction or networking permitted without license from IHS
Not for Resale

ANSI/UL 1332 *Organic Coatings for Steel Enclosure for Outdoor-Use Electrical Equipment*

1.3 DEFINITIONS

The following definitions are applicable in this standard.

Cover: An unhinged portion of an enclosure that covers an opening.

Degree of Protection: The extent of protection provided by an enclosure against access to hazardous parts, against ingress of foreign solid objects and/or against ingress of water and verified by standardized test methods.

Design Tests: Tests to demonstrate performance of a product designed to applicable standards.
(Note: Design tests are not intended to be production tests.)

Door: A hinged portion of an enclosure that covers an opening.

Enclosure: A surrounding case constructed to provide a degree of protection to personnel against incidental contact with the enclosed equipment and to provide a degree of protection to the enclosed equipment against specified environmental conditions.

Hazardous (Classified) Locations: Areas which may contain hazardous (classified) materials in sufficient quantity to create an explosion.
(See Article 500 of the National Electrical Code.)

Hazardous (Classified) Materials: Gases, vapors, combustible dusts, fibers, or flyings which are explosive under certain conditions.

Incidental Contact: Accidental or unintentional contact.

Indoor Locations: Areas which are protected from exposure to the weather.

Knockout: A portion of the wall of an enclosure so fashioned that it may be removed readily by a hammer, screw- driver, and pliers at the time of installation in order to provide a hole for the attachment of an auxiliary device or raceway, cable, or fitting.

Non Hazardous Locations: Areas which do not contain hazardous (classified) materials in sufficient quantity to create an explosion.

Nonventilated: Constructed so as to provide no intentional circulation of external air through the enclosure.

Oil-Resistant Gaskets: Gaskets made of material which is resistant to oil and oil fumes.

Outdoor Locations: Areas which are exposed to the weather.

Ventilated: Constructed so as to provide for the circulation of external air through the enclosure to remove excess heat, fumes, or vapors.

Copyright National Electrical Manufacturers Association
Provided by IHS under license with NEMA
No reproduction or networking permitted without license from IHS
Not for Resale

Copyright National Electrical Manufacturers Association
Provided by IHS under license with NEMA
No reproduction or networking permitted without license from IHS

Not for Resale

Section 2
ENCLOSURE TYPES, FEATURES, AND APPLICATIONS

2.1 GENERAL

The features of each enclosure Type are applicable only when the enclosure is completely and properly installed.

All mechanical and electrical parts mounted on or through an enclosure shall pass the applicable tests for the enclosure Type unless otherwise specified.

2.2 SPECIFIC TYPES

Table 2-1 and Table 2-2 are guides for comparing specific applications of enclosures.

The specific enclosure Types, their applications, and the environmental conditions they are designed to protect against are as follows:

Type 1 – Enclosures constructed for indoor use to provide a degree of protection to personnel against incidental contact with the enclosed equipment and to provide a degree of protection against falling dirt.

Type 2 – Enclosures constructed for indoor use to provide a degree of protection to personnel against incidental contact with the enclosed equipment, to provide a degree of protection against falling dirt, and to provide a degree of protection against dripping and light splashing of liquids.

Type 3 – Enclosures constructed for either indoor or outdoor use to provide a degree of protection to personnel against incidental contact with the enclosed equipment; to provide a degree of protection against falling dirt, rain, sleet, snow, and windblown dust; and that will be undamaged by the external formation of ice on the enclosure.

Type 3R – Enclosures constructed for either indoor or outdoor use to provide a degree of protection to personnel against incidental contact with the enclosed equipment; to provide a degree of protection against falling dirt, rain, sleet, and snow; and that will be undamaged by the external formation of ice on the enclosure.

Type 3S – Enclosures constructed for either indoor or outdoor use to provide a degree of protection to personnel against incidental contact with the enclosed equipment; to provide a degree of protection against falling dirt, rain, sleet, snow, and windblown dust; and in which the external mechanism(s) remain operable when ice laden.

Type 4 – Enclosures constructed for either indoor or outdoor use to provide a degree of protection to personnel against incidental contact with the enclosed equipment; to provide a degree of protection against falling dirt, rain, sleet, snow, windblown dust, splashing water, and hose-directed water; and that will be undamaged by the external formation of ice on the enclosure.

Type 4X – Enclosures constructed for either indoor or outdoor use to provide a degree of protection to personnel against incidental contact with the enclosed equipment; to provide a degree of protection against falling dirt, rain, sleet, snow, windblown dust, splashing water, hose-directed water, and corrosion; and that will be undamaged by the external formation of ice on the enclosure.

Type 5 – Enclosures constructed for indoor use to provide a degree of protection to personnel against incidental contact with the enclosed equipment; to provide a degree of protection against falling dirt; against settling airborne dust, lint, fibers, and flyings; and to provide a degree of protection against dripping and light splashing of liquids.

Copyright National Electrical Manufacturers Association
Provided by IHS under license with NEMA
No reproduction or networking permitted without license from IHS
Not for Resale

Type 6 – Enclosures constructed for either indoor or outdoor use to provide a degree of protection to personnel against incidental contact with the enclosed equipment; to provide a degree of protection against falling dirt; against hose-directed water and the entry of water during occasional temporary submersion at a limited depth; and that will be undamaged by the external formation of ice on the enclosure.

Type 6P – Enclosures constructed for either indoor or outdoor use to provide a degree of protection to personnel against incidental contact with the enclosed equipment; to provide a degree of protection against falling dirt; against hose-directed water and the entry of water during prolonged submersion at a limited depth; and that will be undamaged by the external formation of ice on the enclosure.

Type 12 – Enclosures constructed (without knockouts) for indoor use to provide a degree of protection to personnel against incidental contact with the enclosed equipment; to provide a degree of protection against falling dirt; against circulating dust, lint, fibers, and flyings; and against dripping and light splashing of liquids.

Type 12K – Enclosures constructed (with knockouts) for indoor use to provide a degree of protection to personnel against incidental contact with the enclosed equipment; to provide a degree of protection against falling dirt; against circulating dust, lint, fibers, and flyings; and against dripping and light splashing of liquids.

Type 13 – Enclosures constructed for indoor use to provide a degree of protection to personnel against incidental contact with the enclosed equipment; to provide a degree of protection against falling dirt; against circulating dust, lint, fibers, and flyings; and against the spraying, splashing, and seepage of water, oil, and noncorrosive coolants.

Copyright National Electrical Manufacturers Association
Provided by IHS under license with NEMA
No reproduction or networking permitted without license from IHS
Not for Resale

Table 2-1
Comparison of Specific Applications of Enclosures for Indoor Nonhazardous Locations

Provides a Degree of Protection Against the Following Environmental Conditions	Type of Enclosure									
	1 *	2 *	4	4X	5	6	6P	12	12K	13
Incidental contact with the enclosed equipment	X	X	X	X	X	X	X	X	X	X
Falling dirt	X	X	X	X	X	X	X	X	X	X
Falling liquids and light splashing	...	X	X	X	X	X	X	X	X	X
Circulating dust, lint, fibers, and flyings **	...	...	X	X	...	X	X	X	X	X
Settling airborne dust, lint, fibers, and flyings **	...	...	X	X	X	X	X	X	X	X
Hosedown and splashing water	...	...	X	X	...	X	X	...	...	...
Oil and coolant seepage	...	...	...	..	...	...	...	X	X	X
Oil or coolant spraying and splashing	...	...	...	...	...	...	...	...	...	X
Corrosive agents	...	...	...	X	...	...	X	...	...	...
Occasional temporary submersion	...	...	...	...	...	X	X	...	...	...
Occasional prolonged submersion	...	...	...	...	...	...	X	...	...	...

* These enclosures may be ventilated.
** These fibers and flyings are nonhazardous materials and are not considered Class III type ignitable fibers or combustible flyings. For Class III type ignitable fibers or combustible flyings see the National Electrical Code, Article 500.

Table 2-2
Comparison of Specific Applications of Enclosures for Outdoor Nonhazardous Locations

Provides a Degree of Protection Against the Following Environmental Conditions	Type of Enclosure						
	3	3R*	3S	4	4X	6	6P
Incidental contact with the enclosed equipment	X	X	X	X	X	X	X
Rain, snow, and sleet **	X	X	X	X	X	X	X
Sleet ***	...	...	X	...	...	...	...
Windblown dust, lint, fibers, and flyings	X	...	X	X	X	X	X
Hosedown	...	...	...	X	X	X	X
Corrosive agents	...	...	...	...	X	...	X
Occasional temporary submersion	...	...	...	...	...	X	X
Occasional prolonged submersion	...	...	...	...	...	...	X

* These enclosures may be ventilated.
** External operating mechanisms are not required to be operable when the enclosure is ice covered.
*** External operating mechanisms are operable when the enclosure is ice covered. See 5.6.

Copyright National Electrical Manufacturers Association
Provided by IHS under license with NEMA
No reproduction or networking permitted without license from IHS
Not for Resale

Copyright National Electrical Manufacturers Association
Provided by IHS under license with NEMA
No reproduction or networking permitted without license from IHS

Not for Resale

Section 3
CONSTRUCTION

3.1 GENERAL

The construction requirements in this Standard are supplemental to the construction requirements in the individual product standards. In cases of conflict the product standards shall take precedence.

3.2 UNITS OF MEASUREMENT

Unless noted otherwise the first units of measurement shown in this standard are metric units. These measurements are normally followed by an English unit of measurement in parenthesis.

The units of measurement are intended as alternative measurements and are not intended to be exact conversions.

3.3 MATERIALS – GENERAL

Enclosures shall be made of metal or polymeric materials which meet the requirements of 3.4.

3.4 MATERIALS – POLYMERIC

A polymeric enclosure or a polymeric part of an enclosure necessary to maintain the integrity of an electrical enclosure, shall comply with the applicable requirements in the UL Standard for Polymeric Materials – Use in Electrical Equipment Evaluations, UL 746C and also with any additional requirements specified in this Standard.

A polymeric plug or other closure made of a material classed in accordance with the UL Standard for Tests for Flammability of Plastic Material for Parts in Devices and Appliances, UL 94 is acceptable under any one of the following conditions:

a. Not more than 650 mm^2 (1 in^2) in area and is:
   1. Classed as 94-5VA, 94-5VB, 94V-0, 94V-1, or 94V-2; or
   2. Classed as 94HB and complies with the Flammability - 127 mm (5 inch) test in the UL Standard for Polymeric Materials - Use in Electrical Equipment Evaluations, UL 746C.
b. More than 650 mm^2 (1 in^2) in area and is:
   1. Classed as 94-5VA or 94-5VB and complies with the Resistance to Impact (normal and cold) test in the UL Standard for Polymeric Materials - Use in Electrical Equipment Evaluations, UL 746C; or
   2. Classed as 94V-0, 94V-1, 94V-2, or 94HB and complies with the Flammability - 127 mm (5 inch) Flame and the resistance to Impact (normal and cold) test in the UL Standard for Polymeric Materials - Use in Electrical Equipment Evaluations, UL 746C.

3.5 CORROSION PROTECTION – GENERAL

Enclosures shall not be constructed of metals in any combination such as to cause galvanic action which will adversely affect any part of the equipment exposed to moisture.

Copper, bronze, brass containing at least 80 percent copper, stainless steel, or aluminum may be used without additional protection against corrosion.

Hinges and other attachments used on an enclosure shall be resistant to corrosion and shall comply with the same requirements as the enclosure.

3.5.1 Indoor Corrosion Protection

Both the inside and outside surfaces of an enclosure made of ferrous material shall be protected against corrosion by enameling, galvanizing, or other equivalent means. Types 1, 2, 5, 12, 12K, and 13

Copyright National Electrical Manufacturers Association
Provided by IHS under license with NEMA
No reproduction or networking permitted without license from IHS
Not for Resale

ferrous enclosures, and external ferrous parts attached to these enclosure Types and not protected by one of these means shall be tested as described in 5.8.

3.5.2 Outdoor Corrosion Protection

Types 3, 3R, 3S, 4, 4X, 6, and 6P ferrous enclosures, and external ferrous parts attached to these enclosure Types, shall be protected against corrosion by one of the coatings or finishes in 3.5.2.1 through 3.5.2.5.

3.5.2.1 Galvanized G90

Hot-dipped mill-galvanized sheet steel conforming with the coating Designation G90 in Table I of ASTM Designation A653/A653M-95.

3.5.2.2 Zinc Coating

A zinc coating, other than that provided on hot- dipped mill-galvanized sheet steel, uniformly applied to an average thickness of not less than 0.015 mm (0.00061 inch) on each surface with a minimum thickness of 0.014 mm (0.00054 inch). The thickness of coating shall be established by the metallic-coating-thickness test described in ASTM B555. An annealed coating shall comply with 3.5.3.

3.5.2.3 Zinc Coating with Paint

A zinc coating conforming with 3.5.2.3.1 or 3.5.2.3.2 and with one coat of an organic finish of the epoxy or alkyd-resin type or other outdoor paint applied after forming on each surface. The acceptability of the paint may be determined by consideration of its composition or by corrosion tests if these are considered necessary.

3.5.2.3.1 Galvanized G60

Hot-dipped mill-galvanized sheet steel conforming with the coating Designation G60 or A60 in Table I of ASTM Designation A653/A653M-95.

3.5.2.3.2 Zinc Coating other than Galvanized

A zinc coating, other than that provided on hot- dipped mill-galvanized sheet steel, uniformly applied to an average thickness of not less than 0.010 mm (0.00041 inch) on each surface with a minimum thickness of 0.009 mm (0.00034 inch). The thickness of the coating shall be established by the metallic-coating-thickness test described in ASTM B555.

3.5.2.4 Paint

Paint may be accepted when the applicable requirements for Organic Coatings for Steel Enclosures for Outdoor Use Electrical Equipment, UL 1332, indicate that it provides equivalent protection.

3.5.2.5 Other Finishes

All other finishes shall comply with 5.9.

3.5.3 Annealed Coating

An annealed coating on sheet steel that is bent or similarly formed or extruded or rolled at edges of holes after annealing shall be additionally painted in the affected area if the process damages the zinc coating.

3.5.4 Bends and Forms on Zinc Coatings

If flaking or cracking of the zinc coating at the outside radius of the bent or formed section is visible at 25 power magnification, the zinc coating is considered to be damaged. Simple sheared or cut edges and punched holes are not required to be additionally protected.

Copyright National Electrical Manufacturers Association
Provided by IHS under license with NEMA
No reproduction or networking permitted without license from IHS
Not for Resale

3.5.5 Hot Dipped Galvanized Damage

A hot-dipped mill-galvanized G90 coating shall not be damaged during handling or fabrication to the extent that the base metal is exposed.

Exception No. 1: Uncoated cross-sectional surfaces at cut edges and drilled openings are acceptable.

Exception No. 2: The base metal may be exposed if (1) the maximum width and length of the exposed metal does not exceed the thickness and length of any cut edge on the sheet or (2) the surface has one coat of an organic finish of the epoxy or alkyd-resin type, or other outdoor paint applied after fabrication.

Sheet steel that employs a hot-dipped mill-galvanized G90 coating that is drawn, formed, extruded, or rolled shall be additionally painted with one coat of an organic finish of the epoxy or alkyd-resin type or other outdoor paint in the areas that are affected by a process that damages the coating as determined by the requirement in 3.5.4.

3.5.6 Cast Iron

An enclosure of cast iron or malleable iron at least 3.2 mm (1/8 inch) thick shall be protected against corrosion by (1) a 0.0038 mm (0.00015 inch) thick coating of zinc, cadmium, or the equivalent, on the outside surface and a visible coating of such metal on the inside surface, or (2) one coat of an organic finish of the epoxy of alkyd-resin type or other outdoor paint on each surface. The acceptability of the paint may be determined by consideration of its composition or, if necessary, by the corrosion tests specified in 5.9.

3.5.7 Type 4X Corrosion Protection

Type 4X enclosures, and external parts attached to these enclosures, shall be manufactured of American Iron and Steel Institute (AISI) Type 304 Stainless steel, polymerics, or materials with equivalent corrosion resistance. If material other than Type 304 Stainless Steel is used it shall be tested in accordance with 5.9 and 5.10.

3.6 OPENINGS

Openings provided in an enclosure shall comply with the tests for the enclosure type with the openings unfilled except that openings in accordance with 3.6.1, if provided in the test enclosure, shall be filled to maintain the environmental integrity of the enclosure.

3.6.1 Equipment Openings

All enclosures may be provided with openings intended to be closed at installation by equipment. Such openings shall comply with the performance requirements in this standard and with the requirements in the appropriate end product standard when the intended equipment is installed. See 4.6.

3.6.2 Ventilation

Type 1, 2, and 3R enclosures may be ventilated.

3.6.3 Drainage Openings

Type 2 and 3R enclosures shall have provisions for drainage. Drainage openings shall not be less than 3.2 mm in diameter (1/8 inch in diameter) or more than 6.4 mm in diameter (1/4 inch in diameter) unless baffled or provided with a drainage fitting.

For Type 2 and 3R enclosures that also meet the requirements of other enclosure types, the drainage openings shall be closed by a removable plug. The enclosure shall meet the requirements of the other enclosure types with the plug installed. See 4.7.

Copyright National Electrical Manufacturers Association
Provided by IHS under license with NEMA
No reproduction or networking permitted without license from IHS
Not for Resale

3.7 MOUNTING

If mounting means are provided for Types 3, 3S, 4, 4X, 6, 6P, 12, 12K and 13 these means shall be external to the equipment cavity.

3.8 CONDUIT CONNECTION

Enclosures shall be designed for use with appropriate conductor entry provisions to maintain the specified environmental capability after proper installation.

3.9 HUBS AND FITTINGS

A conduit hub or fitting may be shipped separately if the necessary hardware, gaskets, and instructions are provided either with the enclosure or the fitting.

An enclosure provided without conduit hubs shall be marked in accordance with 4.5.

3.10 KNOCKOUTS

All enclosure types except Type 12 shall be permitted to have knockouts.

When knockouts are provided, dimensions should be as shown in Table 3-1.

Knockouts shall meet the appropriate design tests for the enclosure Type in which they are provided.

Copyright National Electrical Manufacturers Association
Provided by IHS under license with NEMA
No reproduction or networking permitted without license from IHS
Not for Resale

Table 3-1
Knockout Dimensions

Conduit Size		Knockout Diameter, Inches		
Trade Size	Metric Designator	Minimum	Nominal	Maximum
1/2	16	0.859	0.875	0.906
3/4	21	1.094	1.109	1.141
1	27	1.359	1.375	1.406
1-1/4	35	1.719	1.734	1.766
1-1/2	41	1.958	1.984	2.106
2	53	2.433	2.469	2.500
2-1/2	63	2.938	2.969	3.000
3	78	3.563	3.594	3.625
3-1/2	91	4.063	4.125	4.156
4	103	4.563	4.641	4.672
5	129	5.625	5.719	5.750
6	155	6.700	6.813	6.844

3.11 EXTERNAL OPERATING MECHANISMS

External operating mechanisms, when mounted on or through the enclosure, shall pass the applicable test for the enclosure Type unless otherwise specified.

External operating mechanisms on a Type 3S enclosure shall support the additional weight of ice and shall withstand the removal of ice by a hand tool. See 5.6.2.

3.12 ACCESS TO INTERIOR

Type 3, 3R, 3S, 5, 12, and 12K enclosures shall require the use of a tool to gain access to the equipment cavity or shall have provisions for locking.

3.13 CLOSING HARDWARE

All closing hardware for Type 5, 12, 12K enclosures shall be captive.

3.14 GASKETS

A gasket of an elastomeric or thermoplastic material used to comply with the requirements for a Type 2, 3, 3R, 3S, 4, 4X, 5, 6, 6P, 12, 12K, or 13 enclosure, shall be subjected to the tensile strength and elongation tests in 5.14.1.

If gaskets are provided for Type 12, 12K, and 13 enclosures they shall be oil resistant and shall comply with the Oil Immersion Test in 5.14.3.

A gasket shall be secured with adhesive or by mechanical means. The gasket and its securing means shall not be damaged when the joint is opened.

Copyright National Electrical Manufacturers Association
Provided by IHS under license with NEMA
No reproduction or networking permitted without license from IHS
Not for Resale

3.15 OBSERVATION WINDOWS

A material covering an observation opening and forming a part of the enclosure shall be reliably secured in such a manner that it cannot be readily displaced in service, shall provide mechanical protection of the enclosed parts, and shall meet the requirements for the enclosure Type.

Glass used for an opening not more than 102 mm (not more than 4 inches) in any dimension shall not be less than 1.40 mm (not less than 0.055 inch) thick. Glass used for an opening having no dimension greater than 305 mm (greater than 12 inches) shall be not less than 2.92 mm (not less than 0.115 inch) thick. Glass used to cover a larger opening shall have the necessary mechanical strength and shall otherwise be acceptable for the purpose.

Copyright National Electrical Manufacturers Association
Provided by IHS under license with NEMA
No reproduction or networking permitted without license from IHS
Not for Resale

Section 4
MARKING

4.1 TYPE DESIGNATIONS

Enclosures shall be designated by the Type number to indicate the environmental conditions for which they are suitable. See Section 2 and Table 2-1 and Table 2-2.

Enclosures which meet the requirements for more than one Type enclosure may be designated by a combination of Type numbers, the lower number being given first.

4.2 SUPPLEMENTAL MARKINGS

Enclosures may be additionally marked with the following supplemental markings. These are relative terms for reference purposes only and do not imply enclosure capabilities.

Raintight – A Type 3, 3S, 4, 4X, 6, or 6P enclosure may be marked "Raintight".

Rainproof – A Type 3R enclosure may be marked "Rainproof".

Watertight – A Type 4, 4X, 6, or 6P enclosure may be marked "Watertight".

Corrosion Resistant – A Type 4X or 6P enclosure may be marked "Corrosion Resistant".

Driptight – A Type 2, 5, 12, 12K, or 13 enclosure may be marked "Driptight".

Dusttight – A Type 3, 3S, 5, 12, 12K, or 13 enclosure may be marked "Dusttight".

4.3 LOCATION OF MARKINGS

Type designation and supplemental markings may be placed at any point on the inside or outside surface of the enclosure or door where they will be readily visible after installation. Other required markings may be provided in instructions provided with the enclosure

4.4 ENCLOSURE ORIENTATION

If the acceptability of a Type 2 or 3R enclosure is dependent upon a particular mounting orientation, the enclosure shall be marked to indicate the required orientation unless the mounting is obvious.

If a Type 2 or 3R enclosure has knockouts for conduit in the sides or back of the enclosure in which the equipment to be installed is not known, it shall be marked to indicate the area in which live parts are to be installed.

4.5 CONDUIT HUBS and CLOSURE PLATES

If a Type 3, 3R or 3S enclosure has provisions for one or more field-installed separable conduit hubs or closure plates, the enclosure shall be marked with the name or trademark of the manufacturer of the hubs or plates, the catalog number, or conduit sizes of fittings that have been found acceptable for use with the enclosure.

If the field-installed separable conduit hubs or closure plates are provided with the enclosure the marking may be omitted.

If a Type 3, 3R or 3S enclosure has no provisions for field installation of conduit hubs, the enclosure shall be marked to indicate that raintight hubs that comply with the requirements of the UL Standard for Fittings for Conduit and Outlet Boxes, UL 514B are to be used.

Copyright National Electrical Manufacturers Association
Provided by IHS under license with NEMA
No reproduction or networking permitted without license from IHS
Not for Resale

A Type 4, 4X, 6 or 6P enclosure shall be marked to indicate that watertight fittings are to be used.

A Type 2, 5, 12, 12K, or 13 enclosure shall be marked to indicate the type of fittings to be used.

4.6 EQUIPMENT OPENINGS

Enclosures provided with equipment openings intended to be closed at installation by field installed equipment shall be marked to indicate that the field installed equipment shall be suitable for the same environmental conditions and shall be installed in accordance with the installation instructions provided.

4.7 DRAINAGE OPENINGS

Types 2 and 3R enclosures that also comply with other enclosure shall be provided with instructions indicating that the drainage hole plugs shall be removed for Type 2 or 3R applications and shall be in place for other applications.

Copyright National Electrical Manufacturers Association
Provided by IHS under license with NEMA
No reproduction or networking permitted without license from IHS
Not for Resale

Section 5
DESIGN TESTS

5.1 GENERAL

Each enclosure Type shall be evaluated to the specific design tests as outlined in Table 5-1 to demonstrate conformance with this standard. To assure realistic testing, the enclosure and its enclosed equipment shall be mounted as intended for use in service.

Table 5-1
Applicable Design Tests

Enclosure Type	Applicable Tests	Clause
1	Rod Entry	5.2
	Indoor Corrosion Protection	5.8
2	Rod Entry	5.2
	Drip	5.3
	Indoor Corrosion Protection	5.8
	Gasket	5.14
3	Outdoor Dust	5.5.1
	External Icing	5.6
	Outdoor Corrosion Protection	5.9
	Gasket	5.14
3R	Rod Entry	5.2
	Rain	5.4
	External Icing	5.6
	Outdoor Corrosion Protection	5.9
	Gasket	5.14
3S	Outdoor Dust	5.5.1
	External Icing	5.6
	Outdoor Corrosion Protection	5.9
	Gasket	5.14
4	External Icing	5.6
	Hosedown	5.7
	Outdoor Corrosion Protection	5.9
	Gasket	5.14

Continued

Copyright National Electrical Manufacturers Association
Provided by IHS under license with NEMA
No reproduction or networking permitted without license from IHS
Not for Resale

Table 5-1 (Continued)

Enclosure Type	Applicable Tests	Clause
4X	External Icing	5.6
	Hosedown	5.7
	Outdoor Corrosion Protection	5.9
	4X Corrosion Protection	5.10
	Gasket	5.14
5	Settling Dust	5.5.2.2
	Indoor Corrosion Protection	5.8
	Gasket	5.14
6	External Icing	5.6
	Hosedown	5.7
	Outdoor Corrosion Protection	5.9
	Submersion	5.11
	Gasket	5.14
6P	External Icing	5.6
	Hosedown	5.7
	Outdoor Corrosion Protection	5.9
	4X Corrosion Protection	5.10
	Air Pressure	5.12
	Gasket	5.14
12, 12K	Circulating Dust	5.5.2.1
	Indoor Corrosion Protection	5.8
	Gasket	5.14
13	Indoor Corrosion Protection	5.8
	Oil Exclusion	5.13
	Gasket	5.14

5.2 ROD ENTRY TEST

This test is intended to simulate incidental contact with enclosed equipment.

5.2.1 Non-ventilated Enclosures Test Method

For Nonventilated Enclosures with live parts located less than 102 mm (less than 4 inches) from the opening this test shall be made by attempting to insert a rod having a diameter of 3.2 mm (a diameter of 1/8 inch).

For Nonventilated Enclosures with live parts located 102 mm or more (4 inches or more) from the opening this test shall be made by attempting to insert a rod having a diameter of 12.7 mm (a diameter of 1/2 inch).

Copyright National Electrical Manufacturers Association
Provided by IHS under license with NEMA
No reproduction or networking permitted without license from IHS
Not for Resale

5.2.2 Ventilated Enclosures Test Method

For Ventilated Enclosures with live parts located less than 102 mm (less than 4 inches) from the opening this test shall be made by attempting to insert a rod having a diameter of 12.7 mm (a diameter of 1/2 inch).

For Ventilated Enclosures with live parts located 102 mm or more (4 inches or more) from the opening this test shall be made by attempting to insert a rod having a diameter of 19 mm (a diameter of 3/4 inch).

5.2.3 Evaluation

The enclosure shall be considered to have met the requirements if the rod cannot enter the enclosure.

5.3 DRIP TEST

This test is intended to simulate dripping and light splashing of liquids.

5.3.1 Method A

The enclosure shall be mounted beneath a drip test apparatus which extends beyond all exposed sides of the enclosure. The drip test apparatus shall be equipped with uniformly distributed drip sources. There shall be one drip source for each 129 cm^2 (20 in^2) of test surface area and each drip source shall have a drip rate of at least 20 drops of water per minute. The enclosure shall be subjected to continuously dripping water for 30 minutes.

Conduit shall be connected as intended.

5.3.2 Method B

The enclosure with conduit connected shall be mounted as intended and the top exposed to a water spray falling for 1 hour at the rate of 25 ± 10 mm/h at any angle up to 15° from the vertical.

5.3.3 Evaluation

A Type 2 enclosure shall be considered to have met the requirements if at the conclusion of the test there is no significant accumulation of water within the enclosure and no water has entered the enclosure at a level higher than the lowest live part.

Exception: Water shall be permitted to enter above live parts if the equipment is so constructed that no water is visible on the live parts, insulating material, or mechanism parts and no water has entered any space within the enclosure in which wiring may be present under any proper installation conditions.

5.4 RAIN TEST

This test is intended to simulate falling rain.

A device that meets the requirements of this test also meets the requirements of the Drip Test (5.3).

5.4.1 Method

A complete enclosure with conduit connected shall be mounted as in actual service except that the conduit shall be connected without using pipe thread sealing compound. Rigid conduit shall be threaded into the opening in the enclosure and tightened with the torque as specified in Table 5-2.

The test apparatus shall consist of at least three spray heads mounted in a water supply pipe rack as shown in Figure 5-1. Spray heads shall be constructed in accordance with the details shown in Figure 5-2.

The enclosure is to be positioned in the focal area of the spray heads so that the greatest quantity of water is likely to enter the enclosure. The water pressure is to be maintained at 34.5 kPa (5 psi) at each spray head and a continuous water spray shall be applied for one hour.

Copyright National Electrical Manufacturers Association
Provided by IHS under license with NEMA
No reproduction or networking permitted without license from IHS
Not for Resale

5.4.2 Evaluation

A Type 3R enclosure shall be considered to have met the requirements if at the conclusion of the test there is no significant accumulation of water within the enclosure and no water has entered the enclosure at a level higher than the lowest live part.

Exception: Water shall be permitted to enter above live parts if the equipment is so constructed that no water is visible on the live parts, insulating material, or mechanism parts and no water has entered any space within the enclosure in which wiring may be present under any proper installation conditions.

Table 5-2
Tightening Torque

Torque		Conduit Size	
Newton-Meters	**Pound-Inches**	**Trade Size**	**Metric Designator**
90.4	800	3/4 and smaller	21 and smaller
113	1000	1, 1-1/4, and 1-1/2	27, 35, and 41
180.8	1600	2 and larger	53 and larger

Copyright National Electrical Manufacturers Association
Provided by IHS under license with NEMA
No reproduction or networking permitted without license from IHS
Not for Resale

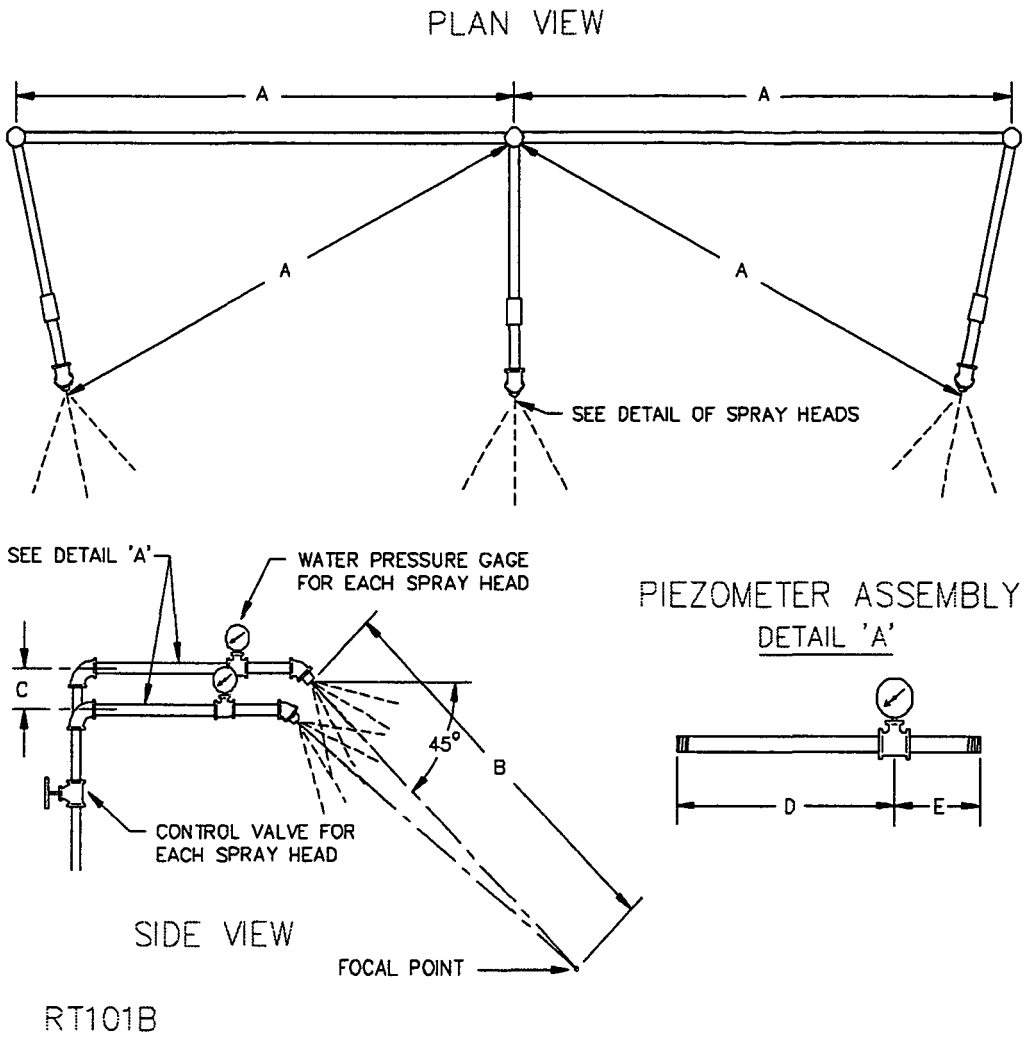

Item	mm	inch
A	710	28
B	1400	55
C	55	2-1/4
D	230	9
E	75	3

This material is reproduced, with permission, from Underwriters Laboratories Inc. Standard for Safety for Enclosures for Electrical Equipment, UL 50, Copyright 1995 (by Underwriters Laboratories Inc.), copies of which may be purchased from Underwriters Laboratories Inc., Publications Stock, 333 Pfingsten Road, Northbrook, Illinois 60062-2096.

Figure 5-1
Rain-test spray-head piping

Copyright National Electrical Manufacturers Association
Provided by IHS under license with NEMA
No reproduction or networking permitted without license from IHS
Not for Resale

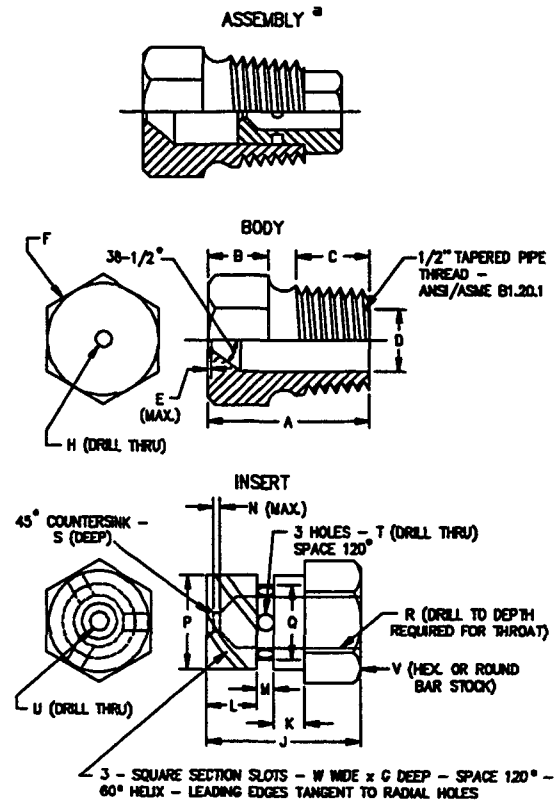

This material is reproduced, with permission, from Underwriters Laboratories Inc. Standard for Safety for Enclosures for Electrical Equipment, UL 50, Copyright 1995 (by Underwriters Laboratories Inc.), copies of which may be purchased from Underwriters Laboratories Inc., Publications Stock, 333 Pfingsten Road, Northbrook, Illinois 60062-2096.

Item	mm	Inch	Item	mm	inch
A	31.0	1-7/32	N	0.80	1/32
B	11.0	7/16	P	14.61	.575
C	14.0	9/16		14.63	.576
D	14.68	.578	Q	11.51	.453
	14.73	.580		11.53	.454
E	0.40	1/64	R	6.35	1/4
F	c	c	S	0.80	1/32
G	1.52	.06	T	2.80	(No. 35)[b]
H	5.0	(No. 9)[b]	U	2.50	(No. 40)[b]
J	18.3	23/32	V	16.0	5/8
K	3.97	5/32	W	1.52	0.06
L	6.35	1/4			
M	2.38	3/32			

[a] Nylon Rain-Test Spray Heads are available from Underwriters Laboratories

[b] ANSI/ASME B94.11M Drill size

[c] Optional - To serve as wrench grip.

Figure 5-2
Rain-test spray head

Copyright National Electrical Manufacturers Association
Provided by IHS under license with NEMA
No reproduction or networking permitted without license from IHS
Not for Resale

5.5 DUST TEST

5.5.1 Outdoor Dust Test

This test is intended to simulate windblown dust.

A device that meets the requirements of this test also meets the requirements of the Circulating Dust Test (5.5.2.1), the Settling Dust Test (5.5.2.2), the Rod Entry Test (5.2), the Drip Test (5.3), and the Rain Test (5.4).

5.5.1.1 Dust Blast Method

The enclosure shall be subjected to a blast of compressed air mixed with dry Type 1 general-purpose Portland cement, using a suction-type sand blast gun which is equipped with a 4.7 mm diameter (3/16 inch diameter) air jet and a 9.5 mm diameter (3/8 inch diameter) nozzle. The air shall be dry and at a pressure of 620 to 690 kPa (90 to 100 psi).

The cement shall be applied at a rate of 2.27 kg/minute (5 pounds/min). The nozzle shall be held 305 to 380 mm (12 to 15 inches) away from the enclosure, and the blast of air and cement shall be directed at all points of potential dust entry, such as seams, joints, external operating mechanisms, and so forth. The total volume of concrete sprayed shall be at least 5.9 kg per linear meter of test length (4 pounds per linear foot of test length). The test length is equal to the sum of the height, width, and depth of the test specimen.

A conduit shall be permitted to be installed to equalize the internal and external pressures.

5.5.1.2 Evaluation

The enclosure shall be considered to have met the requirements if at the conclusion of the test no dust has entered the enclosure.

5.5.1.3 Hose Method

This test is an alternate to the Dust Blast Method described in 5.5.1.1.

The enclosure and its external mechanisms shall be subjected to a stream of water from a hose which has a 25 mm inside diameter (1 inch inside diameter) nozzle that delivers at least 170 L/min (45 gal/min).

The water shall be directed at all points of potential dust entry such as seams, joints, external operating mechanisms, and such from a distance of 3.0 to 3.5 m (10 to 12 feet). The nozzle shall be moved along each test point one time at a uniform nominal rate of 6 mm/sec (¼ in/sec).

A conduit shall be permitted to be installed to equalize internal and external pressures but shall not serve as a drain.

5.5.1.4 Evaluation

The enclosure shall be considered to have met the requirements if at the conclusion of the test no water has entered the enclosure.

Copyright National Electrical Manufacturers Association
Provided by IHS under license with NEMA
No reproduction or networking permitted without license from IHS
Not for Resale

5.5.2 Indoor Dust Tests

5.5.2.1 Circulating Dust Test

This test is intended to simulate an indoor industrial environment of circulating dust, lint, fibers, and flyings.

A device that meets the requirements of this test also meets the requirements of the Settling Dust Test (5.5.2.2), the Rod Entry Test (5.2), and the Drip Test (5.3).

5.5.2.1.1 Dust Method

The enclosure shall be placed in its intended mounting position in an airtight chamber having an internal volume not less than 0.169 m^3 (6 ft^3). The volume of the chamber shall be not less than 150 percent of the volume of the enclosure under test (L x W x H). The test chamber shall be maintained at ambient room temperature and 20-50 percent relative humidity.

At least 1.5 kg of dry Type 1 general-purpose Portland cement per cubic meter of test chamber (at least 1.5 ounces per cubic foot) shall be circulated by means of a blower suction unit for five minutes so as to completely envelop the enclosure under test. The air velocity at the outlet of the blower is to be maintained at approximately 305 m/min (1000 ft/min).

5.5.2.1.2 Evaluation – Dust Method

The enclosure shall be considered to have met the requirements if at the conclusion of the test no dust has entered the enclosure.

5.5.2.1.3 Atomized-Water Method (Method A)

This test is an alternate to the Dust Method described in 5.5.2.1.1.

The enclosure shall be subjected to a spray of atomized water using a nozzle which produces a round pattern 75 to 100 mm in diameter when measured 300 mm from the nozzle (3 to 4 inches in diameter when measured 12 inches from the nozzle). The air pressure shall be 200 kPa (30 psi) and the nozzle shall deliver water at a rate of 11.4 L (3 gallons) per hour.

The nozzle shall be held from 300 to 380 mm (12 to 15 inches) from the enclosure and the spray of water shall be directed at all points of potential dust entry such as seams, joints, external operating mechanisms, and such. The nozzle shall be moved along each test point one time at a uniform nominal rate of 6 mm/sec (¼ in/sec).

A conduit shall be permitted to be installed to equalize the internal and external pressures but shall not serve as a drain.

A seam is the junction of, or the joint between, two pieces. When two covers or doors are adjacent, their common edges shall be considered a single seam.

5.5.2.1.4 Evaluation – Atomized Water Method (Method A)

The enclosure shall be considered to have met the requirements if at the conclusion of the test no water has entered the enclosure.

5.5.2.2 Settling Dust Test

This test is intended to simulate an indoor industrial environment of settling airborne dust, lint, fibers, and flyings.

A device that meets the requirements of this test also meets the requirements of the Rod Entry Test (5.2) and the Drip Test (5.3).

Copyright National Electrical Manufacturers Association
Provided by IHS under license with NEMA
No reproduction or networking permitted without license from IHS
Not for Resale

5.5.2.2.1 Dust Method

At least 0.85 kg of dry Type 1 General Purpose Portland cement per cubic meter of test chamber (at least 0.85 ounces per cubic foot) is to be circulated by means of a blower suction unit so as to completely envelop the enclosure under test. The air velocity at the outlet of the blower is to be 304.8 m/min (1000 ft./min). The blower shall be cycled 15 seconds on and 30 seconds off for seven complete cycles.

5.5.2.2.2 Evaluation – Dust Method

The enclosure shall be considered to have met the requirements if at the conclusion of the test no dust has entered the enclosure.

5.5.2.2.3 Atomized-Water Method (Method B)

This test is an alternate to the dust method described in 5.5.2.2.1.

The enclosure shall be subjected to a spray of atomized water using a nozzle that produces a round pattern 75 to 100 mm in diameter when measured 300 mm from the nozzle (3 to 4 inches in diameter when measured 12 inches from the nozzle). The air pressure shall be 170 kPa (25 psi) and the nozzle shall deliver water at a flowrate of 11.4 L/hour (3 gal/hour).

The nozzle shall be held from 460 to 530 mm (18 to 21 inches) away from the enclosure and the spray of water shall be directed at all points of potential settling airborne dust entry such as seams, joints, external operating mechanisms, and such. The nozzle shall be moved along each test point one time at a uniform nominal rate of 11 mm/s (7/16 in/sec).

A conduit shall be permitted to be installed to equalize the internal and external pressure, but shall not serve as a drain.

A seam is the junction of, or the joint between, two pieces. When two covers or doors are adjacent, their common edges shall be considered a single seam.

5.5.2.2.4 Evaluation - Atomized Water Test (Method B)

The enclosure shall be considered to have met the requirements if at the conclusion of the test no water has entered the enclosure.

5.6 EXTERNAL ICING TEST

This test is intended to simulate freezing rain, sleet, and snow.

A Type 3, 3R, 4, 4X, 6, and 6P enclosure which has no external cavities to trap water when mounted in the normal position shall be considered to be acceptable and need not be tested.

5.6.1 Test Method

The enclosure shall be mounted in a room which can be cooled to -7°C (20°F). A metal test bar which is 25.4 mm in diameter by 600 mm long (1 inch in diameter and 2 feet long) shall be mounted in a horizontal position in a location where it will receive the same general water spray as the enclosure under test.

Provision shall be made for spraying the entire enclosure from above with water at an angle of approximately 45 degrees from the vertical. The water shall be between 0°C and 3°C (32°F and 37°F).

Spraying facilities which provide between 40 and 80 L per hour per square meter (1 and 2 gallons per hour per square foot) of area to be sprayed have been found effective.

The room temperature shall be lowered to 35°F (2°C). The spray of water shall be started and continued for at least 1 hour, maintaining the room temperature between 1°C and 3°C (33°F and 37°F).

Copyright National Electrical Manufacturers Association
Provided by IHS under license with NEMA
No reproduction or networking permitted without license from IHS
Not for Resale

At the end of this time, the room temperature shall be lowered to between -7°C and -3°C (20°F and 27°F) while continuing the water spray. (The rate of change in the room temperature is not critical and shall be whatever is obtainable with the cooling means employed.) The water spray shall be controlled so as to cause ice to build up on the bar at a rate of approximately 6.35 mm/hour (1/4 in/hour) and shall be continued until 20 mm (3/4 inch) of ice has formed on the top surface of the bar. The spray shall then be discontinued but the room temperature shall be maintained between -7°C and -3°C (20°F and 27°F) for 3 hours to assure that all parts of the enclosure and ice coatings have been equalized to a constant temperature.

5.6.2 Evaluation

A Type 3S enclosure and its external mechanisms shall be considered to have met the requirements of this test if while ice laden, they can be manually operated by one person without any damage to the enclosure, the enclosed equipment, or mechanism.

When an auxiliary mechanism is provided to break the ice, it shall be included and utilized in the test. A separate test is required for each maintained position of each external operator. If necessary, it shall be possible to gain access to the enclosure interior using an appropriate hand tool without causing functional damage to the enclosure.

A Type 3, 3R, 4, 4X, 6, and 6P enclosure shall be considered to have met the requirements if at the conclusion of the test the enclosure is found to be undamaged after the ice has melted.

5.7 HOSEDOWN TEST

This test is intended to simulate a hosedown condition.

A device that meets the requirements of this test also meets the requirements of the Rod Entry Test (5.2), Drip Test (5.3), Rain Test (5.4), and Dust Tests (5.5).

5.7.1 Test Method

The enclosure and its external mechanisms shall be subjected to a stream of water from a hose which has a 25 mm inside diameter (1 inch inside diameter) nozzle that delivers at least 240 L per min (65 gallons per minute).

The nozzle shall be held from 3.0 to 3.5 m (10 to 12 feet) away from the enclosure and the spray of water shall be directed at all points of potential water entry such as seams, joints, external operating mechanisms, and such. The nozzle shall be moved along each test point one time at a uniform nominal rate of 6 mm/sec (¼ in/sec).

A conduit shall be permitted to be installed to equalize internal and external pressures but shall not serve as a drain.

5.7.2 Evaluation

The enclosure shall be considered to have met the requirements if at the conclusion of the test no water has entered the enclosure.

5.8 Indoor Corrosion Protection (Rust-Resistance Test (24-Hour Salt Spray Test))

Unless the enclosures comply with 3.5.1, the enclosures, or representative parts of the enclosures, shall be subjected to the test described below or in Salt Spray (Fog) Testing, ASTM B117-1985.

5.8.1 Test Equipment

The test apparatus shall consist of a fog chamber, a salt-solution reservoir, a supply of compressed air, atomizing nozzles, support for the enclosure, provision for heating the chamber, and means of control. It shall not permit drops of solution which accumulate on the ceiling or cover of the chamber to fall on the enclosure being tested, shall not permit drops of solution which fall from the enclosure to be returned to

Copyright National Electrical Manufacturers Association
Provided by IHS under license with NEMA
No reproduction or networking permitted without license from IHS
Not for Resale

the solution reservoir for respraying, and shall be constructed of materials which will not affect the corrosiveness of the fog.

5.8.2 Salt Solution

The salt solution shall be prepared by dissolving 5 parts by weight of salt in 95 parts by weight of either distilled water or water containing not more than 200 parts per million of total solids. The salt shall be sodium chloride which is substantially free of nickel and copper and which contains, when dry, not more than 0.1 percent of sodium iodide and not more than 0.3 percent of total impurities.

5.8.3 Air Supply

The compressed air supply to the nozzle(s) for atomizing the salt solution shall be free of oil and dirt and shall be maintained between 69 and 172 kPa (between 10 and 25 psi).

5.8.4 Temperature

The temperature of the salt spray chamber shall be maintained between 33°C and 36°C (between 92°F and 97°F). The nozzle(s) shall be directed or baffled so that none of the spray can impinge directly on the enclosure being tested.

5.8.5 Test Procedure

The chamber shall be closed and the spray operated continuously except for the short daily interruption necessary to inspect, rearrange, or remove the test specimens, to check and replenish the solution in the reservoir, and to make necessary recordings.

The test shall be run continuously for 24 hours. At the end of the test, the specimens shall be removed from the chamber and washed in clean running water which is not warmer than 38°C (100°F) to remove salt deposits from their surface, and then dried immediately. Corrosion products, other than rust, shall be permitted to be removed by light brushing if required, to observe the condition of the underlying stratum.

5.8.6 Evaluation

The enclosure shall be considered to have met the requirements of this test if there is no rust except at those points where protection is impractical, such as machined and mating surfaces of cast enclosures and sliding surfaces of hinges, shafts, and so forth.

5.9 OUTDOOR CORROSION PROTECTION

Finishes other than as described in 3.5.2.1 to 3.5.2.5, such as special metallic finishes, or metallic finish combined with paint shall be tested as described in 5.9.1 and 5.9.3.

5.9.1 600 Hour Salt Spray Test

Comparative tests shall be conducted in accordance with 5.8 except the test time shall be 600 hours.

The comparison shall be with G90 galvanized sheet steel (without annealing, wiping, or other surface treatment) conforming with 3.5.2.1.

5.9.2 Evaluation

An enclosure shall be considered to have met the requirements of this test if upon completion it does not show pitting, cracking, or other deterioration more severe than that resulting from a similar test on G90 galvanized steel.

5.9.3 1200 Hour Moist Carbon Dioxide - Sulfur Dioxide - Air Test

Tested and evaluated in accordance with UL 1332.

Copyright National Electrical Manufacturers Association
Provided by IHS under license with NEMA
No reproduction or networking permitted without license from IHS
Not for Resale

5.10 TYPE 4X CORROSION PROTECTION

A Type 4X and 6P enclosure shall be tested with comparison tests in accordance with 5.8 except the test time shall be 200 hours.

The comparison shall be with American Iron and Steel Institute Type 304 stainless steel.

5.10.1 Evaluation

An enclosure shall be considered to have met the requirements of this test if upon completion it does not show pitting, cracking, or other deterioration more severe than that resulting from a similar test on passivated American Iron and Steel Institute Type 304 stainless steel.

5.11 SUBMERSION TEST

This test is intended to simulate temporary submersion at a limited depth.

A device that meets the requirements of this test also meets the requirements of the Rod Entry Test (5.2).

5.11.1 Test Method

The complete enclosure shall be mounted in a tank with the conduit connected using pipe-thread sealing compound. The conduit shall be tightened with the torque values specified in Table 5-2.

The tank shall be filled with water so that the highest point of the enclosure is 1.8 m below the surface (6 feet below the surface) of the water. After 30 minutes, the enclosures shall be removed from the tank, the excess water removed from the surface of the enclosure, and the enclosure opened.

The enclosure need not be submersed to a depth of 1.8 m (depth of 6 feet) if an equivalent pressure differential between the interior and the exterior of the enclosure is maintained for the required period of time. This differential shall be permitted to be achieved either by reducing the air pressure inside the enclosure or pressurizing the water surrounding the enclosure.

5.11.2 Evaluation

The enclosure shall be considered to have met the requirements if at the conclusion of the test no water has entered the enclosure.

5.12 PRESSURE TEST

This test is intended to simulate prolonged submersion at a limited depth.

A device that meets the requirements of this test also meets the requirements of the Rod Entry Test (5.2) and the Submersion Test (5.11).

5.12.1 Alternate Tests

The Internal Pressurization Test in 5.12.1.1 and the External Pressurization Test in 5.12.1.3 are alternate test methods and either may be conducted.

5.12.1.1 Internal Pressurization Test

The complete enclosure with conduit, pressure gage, and check valve shall be pressure tested. The internal air pressure of the enclosure shall be raised to 40 kPa (6 psig) and the check valve closed. After 24 hours the pressure shall be checked.

The conduit shall be connected using pipe-thread sealing compound and shall be tightened with the torque specified in Table 5-2.

Copyright National Electrical Manufacturers Association
Provided by IHS under license with NEMA
No reproduction or networking permitted without license from IHS
Not for Resale

5.12.1.2 Evaluation – Internal Pressurization

The enclosure shall be considered to have met the requirements if at the conclusion of the test the internal pressure is a minimum of 26 kPa (4 psig) and there is no permanent deformation of the enclosure.

5.12.1.3 External Pressurization Test

Submerge the complete enclosure, connected as intended for use, in water so that the highest point of the enclosure is 1.8 m below the surface (6 feet below the surface) for a period of 24 hours. The enclosure need not be submerged to a depth of 1.8 m (depth of 6 feet) if the equivalent pressure differential between the interior and exterior of the enclosure is maintained for the required period of time. This differential shall be permitted to be achieved by pressurizing the water around the enclosure to simulate a depth of 1.8 m (depth of 6 feet).

5.12.1.4 Evaluation

The enclosure shall be considered to have met the requirements if at the conclusion of the test no water has entered the enclosure.

5.13 OIL EXCLUSION TEST

This test is intended to simulate spraying water, oil and noncorrosive coolant. A device that meets the requirements of this test also meets the requirements of the Rod Entry Test (5.2), the Rain Test (5.4), and the Dust Tests (5.5).

The compatibility of the gasket with other sealing materials and liquids to which it is exposed may have to be determined by tests.

5.13.1 Test Method

The enclosure shall be subjected to a stream of test liquid consisting of water and a wetting agent. The concentration of the wetting agent shall be approximately 0.1 percent by weight (or by volume if the wetting agent is liquid). The liquid shall be supplied through a nozzle with a 10 mm diameter opening (3/8 inch diameter opening) which delivers at least 7 L/min (2 gal/min).

Note: One such wetting agent is Rohm and Haas' Triton X-100.

The stream shall be directed upon the enclosure from all angles from a distance of 300 to 460 mm (a distance of 12 to 18 inches) for 30 minutes. If the enclosure houses an externally operated device, the device shall be operated at a rate of approximately 30 operations per minute for the duration of the test. A conduit shall be permitted to be installed to equalize internal and external pressures but shall not serve as a drain.

5.13.2 Evaluation

The enclosure shall be considered to have met the requirements if at the conclusion of the test no test liquid has entered the enclosure.

5.14 GASKET TESTS

5.14.1 Aging Test

Gasket material used in a Type 2, 3, 3R, 3S, 4, 4X, 5, 6, 6P, 12, 12K, or 13 enclosure shall be of such quality that samples subjected to a temperature of 69-70°C (156-158°F) in circulating air for 168 hours have a tensile strength of not less than 75% and an elongation of not less than 60% of values determined for unaged samples.

Copyright National Electrical Manufacturers Association
Provided by IHS under license with NEMA
No reproduction or networking permitted without license from IHS
Not for Resale

5.14.2 Evaluation

At the conclusion of the tests, there shall be no visible deterioration, deformation, melting, or cracking of the material and the material shall not harden as determined by normal hand flexing.

5.14.3 Oil immersion test

Gasket material, if used in a Type 12, 12K, or 13 enclosure, shall not swell more than 25 percent or shrink more than 1 percent as a result of immersion in ASTM Reference Oil No. 3 (see the Standard Test Method for Rubber Property—Effect of Liquids, ASTM D471-79, for oil specifications) or IRM Immersion Oil 903 (see ASTM ES27-94) for 70 hours at room temperature.

Copyright National Electrical Manufacturers Association
Provided by IHS under license with NEMA
No reproduction or networking permitted without license from IHS
Not for Resale

APPENDIX A

Comparison Between NEMA Enclosure Type Numbers and IEC Enclosure Classification Designations

IEC Publication 529 Classification of Degrees of Protection Provided by Enclosures provides a system for specifying the enclosures of electrical equipment on the basis of the degree of protection provided by the enclosure. IEC 529 does not specify degrees of protection against mechanical damage of equipment, risk of explosions, or conditions such as moisture (produced for example by condensation), corrosive vapors, fungus, or vermin. The NEMA Standard for Enclosures for Electrical Equipment does test for environmental conditions such as corrosion, rust, icing, oil, and coolants. For this reason, and because the test and evaluations for other characteristics are not identical, the IEC Enclosure Classification Designations cannot be exactly equated with the enclosure Type numbers in this Standard.

The IEC designation consists of the letters IP followed by two numerals. The first characteristic numeral indicates the degree of protection provided by the enclosure with respect to persons and solid foreign objects entering the enclosure. The second characteristic numeral indicates the degree of protection provided by the enclosure with respect to the harmful ingress of water.

Table A-1 provides an equivalent conversion from the enclosure Type numbers in this Standard to the IEC Enclosure Classification Designations. The enclosure type numbers meet or exceed the test requirements for the associated IEC Classification; for this reason Table A-1 cannot be used to convert from IEC Classifications to enclosure Type numbers.

Table A-1
Conversion of Enclosure Type numbers to IEC Classification Designations
(Cannot be used to convert IEC Classification Designations to NEMA Type numbers)

Enclosure Type Number	IEC Enclosure Classification Designation
1	IP10
2	IP11
3	IP54
3R	IP14
3S	IP54
4 and 4X	IP56
5	IP52
6 AND 6P	IP67
12 AND 12K	IP52
13	IP54

This comparison is based on tests specified in IEC Publication 529.

Copyright National Electrical Manufacturers Association
Provided by IHS under license with NEMA
No reproduction or networking permitted without license from IHS
Not for Resale

Supplement A

DESCRIPTIONS, APPLICATIONS, FEATURES, AND TEST CRITERIA OF ENCLOSURES FOR HAZARDOUS (CLASSIFIED) LOCATIONS

SA1.1 GENERAL

Type 7 and 10 enclosures, when properly installed and maintained, are designed to contain an internal explosion without causing an external hazard. Type 8 enclosures are deigned to prevent combustion through the use of oil-immersed equipment. Type 9 enclosures are designed to prevent the ignition of combustible dust.

Hazardous locations (other than in mines) are classified according to the flammability or combustibility of the materials which may be present and also according to the likelihood that a flammable or combustible concentration is present (For definitions and classifications see the National Electrical Code, Article 500, and ANSI/NFPA 497M, *Classification of Gases, Vapors and Dust for Electrical Equipment in Hazardous (Classified) Locations.* Descriptions and tests in this standards publication cover equipment which is suitable for installation in locations classed as Division 1 or Division 2. In Division 2 locations, other types of protection and enclosures for nonhazardous locations may be installed if the equipment does not constitute a source of ignition under normal operating conditions. (See the specific sections of Articles 501 through 503 of the National Electrical Code.)

Enclosures for non-hazardous locations described in the main part of this standards publication which have met the requirements of the dust test described in 5.5, may be used in Class II, Group G, Division 2, and Class III, Division 1 and 2 locations.

Hazards may he reduced or eliminated and equipment installed in enclosures suitable for non-hazardous locations by adequate positive pressure ventilation from a source of clean air in conjunction with effective safeguards against ventilation failure. See ANSI/NFPA 496, *Purged and Pressurized Enclosures for Electrical Equipment*, for detailed requirements.

SA2.1 SPECIFIC TYPES

Table SA-1 is a guide for comparing specific applications of enclosures.

The specific enclosure Types, their applications, and the environmental conditions they are designed to protect against are as follows:

Type 7 – Enclosures constructed for indoor use in hazardous locations classified as Class I, Division 1, Groups A, B, C, or D as defined in NFPA 70.

Type 8 – Enclosures constructed for either indoor or outdoor use in hazardous locations classified as Class I, Division 1, Groups A, B, C, and D as defined in NFPA 70.

Type 9 – Enclosures constructed for indoor use in hazardous locations classified as Class II, Division 1, Groups E, F, or G as defined in NFPA 70.

Type 10 – Enclosures constructed to meet the requirements of the Mine Safety and Health Administration, 30 CFR, Part 18.

Copyright National Electrical Manufacturers Association
Provided by IHS under license with NEMA
No reproduction or networking permitted without license from IHS
Not for Resale

Table SA-1
Comparison of Specific Applications of Enclosures for Indoor Hazardous Locations (If the installation is outdoors and/or additional protection is required by Table 2-1 and Table 2-2, a combination-type enclosure is required)

Provides a Degree of Protection Against Atmospheres Typically Containing (See NFPA 497M for Complete Listing)	Class	Enclosure Types 7 and 8, Class I Groups **				Enclosure Type 9 Class II Groups			
		A	B	C	D	E	F	G	10
Acetylene	I	X	...	...	...	...	...	...	...
Hydrogen, manufactured gas	I	...	X	...	...	...	...	...	...
Diethyl ether, ethylene, cyclopropane	I	...	...	X	...	...	...	...	...
Gasoline, hexane, butane, naphtha, propane, acetone, toluene, isoprene	I	...	...	...	X	...	...	...	...
Metal dust	II	...	...	...	...	X	...	...	...
Carbon black, coal dust, coke dust	II	...	...	...	...	...	X	...	...
Flour, starch, grain dust	II	...	...	...	...	...	...	X	...
Fibers, flyings *	III	...	...	...	...	...	...	X	...
Methane with or without coal dust	MSHA	...	...	...	...	...	...	...	X

* For Class III type ignitable fibers or combustible flyings see the National Electrical Code, Article 500.
** Due to the characteristics of the gas, vapor, or dust, a product suitable for one Class or Group may not be suitable for another Class or Group unless marked on the product.

SA3.1 ENCLOSURE FEATURES

SA3.1.1 Type 7 Enclosures

Type 7 enclosures shall be capable of withstanding the pressures resulting from an internal explosion of specified gases, and contain such an explosion sufficient that an explosive gas-air mixture existing in the atmosphere surrounding the enclosure will not be ignited. Enclosed heat generating devices shall not cause external surfaces to reach temperatures capable of igniting explosive gas-air mixtures in the surrounding atmosphere. Enclosures shall meet explosion, hydrostatic, and temperature design tests.

When completely and properly installed Type 7 enclosures:

a. Provide a degree of protection to a hazardous gas environment from an internal explosion or from operation of internal equipment
b. Do not develop surface temperatures which exceed prescribed limits for the specific gas corresponding to the atmospheres for which the enclosure is intended, when internal equipment is operated at rated load.
c. Withstand a series of internal explosion design tests which determine:
   1. The maximum pressure effects of the gas mixture.
   2. Propagation effects of the gas mixtures.
d. Withstand, without rupture or permanent distortion, an internal hydrostatic design test based on the maximum internal pressure obtained during explosion tests and on a specified safety factor.
e. Are marked with the appropriate Class and Group(s)for which they have been qualified.

SA3.1.2 Type 8 Enclosures

Type 8 enclosures and enclosed devices are arranged such that all arcing contacts, connections, and so forth, are immersed in oil. Arcing is confined under the oil such that it will not ignite an explosive mixture of the specified gases in internal spaces above the oil or in the atmosphere surrounding the

Copyright National Electrical Manufacturers Association
Provided by IHS under license with NEMA
No reproduction or networking permitted without license from IHS
Not for Resale

enclosure. Enclosed heat generating devices shall not cause external surfaces to reach temperatures capable of igniting explosive gas-air mixtures in the surrounding atmosphere. Enclosures shall meet operation and temperature design tests. Enclosures intended for outdoor use shall also meet the rain test.

When completely and properly installed, Type 8 enclosures:

a. Provide, by oil immersion, a degree of protection to a hazardous gas environment from operation of internal equipment.
b. Do not develop surface temperatures which exceed prescribed limits for the specific gas corresponding to the atmospheres for which the enclosure is intended, when internal equipment is at rated load.
c. Withstand a series of operation design tests with oil levels arbitrarily reduced and with flammable gas-air mixtures introduced above the oil.
d. When intended for installation outdoors, shall exclude water under test conditions which are intended to simulate rain.
e. Are marked with the appropriate Class and Group(s) for which they have been qualified.

SA3.2.3 Type 9 Enclosures

Type 9 enclosures shall be capable of preventing the entrance of dust. Enclosed heat generating devices shall not cause external surfaces to reach temperatures capable of igniting or discoloring dust on the enclosure or igniting dust-air mixtures in the surrounding atmosphere. Enclosures shall meet dust penetration and temperature design tests, and aging of gaskets (if used).

When completely and properly installed, Type 9 enclosures:

a. Provide a degree of protection to a hazardous dust environment from operation of internal equipment.
b. Do not develop surface temperatures which exceed prescribed limits for the Group corresponding to the atmospheres for which the enclosure is intended, when internal equipment is operated at rated load.
c. Withstand a series of operation design tests while exposed to a circulating dust mixture, to determine that dust does not enter the enclosure and that operation of devices does not cause ignition of the surrounding atmosphere.
d. Are marked with the appropriate Class and Group(s) for which they have been qualified.

SA3.1.4 Type 10 Enclosures

Nonventilated Type 10 Enclosures are constructed for mine use and to meet the requirements of the Mine Safety and Health Administration.

SA4.1 ENCLOSURE TEST CRITERIA

SA4.1.1 Type 7 Enclosures

Type 7 enclosures shall he tested and evaluated in accordance with the applicable portions of:

a. ANSI/UL 698. *Industrial Control Equipment for Use in Hazardous (Classified) Locations.*
b. ANSI/UL 877, *Circuit Breakers and Circuit Breaker Enclosures for Use in Hazardous (Classified) Locations.*
c. ANSI/UL 886, *Outlet Boxes and Fittings for Use in Hazardous (Classified) Locations.*
d. ANSI/UL 894. *Switches for Use in Hazardous (Classified) Locations.*

Copyright National Electrical Manufacturers Association
Provided by IHS under license with NEMA
No reproduction or networking permitted without license from IHS
Not for Resale

SA4.1.2 Type 8 Enclosures

Type 8 enclosures shall be tested and evaluated in accordance with the applicable portions of:

a. ANSI/UL 698, *Industrial Control Equipment for Use in Hazardous (Classified) Locations.*
b. ANSI/UL 877, *Circuit Breakers and Circuit- Breaker Enclosures for Use in Hazardous (Classified) Locations.*
c. Rain test described in 5.4.

SA4.1.3 Type 9 Enclosures

Type 9 enclosures shall be tested and evaluated in accordance with the applicable portions of:

a. ANSI/UL 698, *Industrial Control Equipment for Use in Hazardous (Classified) Locations.*
b. ANSI/UL 877, *Circuit Breakers and Circuit Breaker Enclosures for Use in Hazardous (Classified) Locations.*
c. ANSI/UL 886, *Outlet Boxes and Fittings for Use in Hazardous (Classified) Locations.*
d. ANSI/UL 894, *Switches for Use in Hazardous (Classified) Locations.*

SA4.1.4 Type 10 Enclosures

The design test for Type 10 enclosures shall be in accordance with the Mine Safety and Health Administration, 30 CFR, Part 18.

Copyright National Electrical Manufacturers Association
Provided by IHS under license with NEMA
No reproduction or networking permitted without license from IHS
Not for Resale



NEMA

NATIONAL ELECTRICAL MANUFACTURERS ASSOCIATION • 1300 NORTH 17TH STREET • SUITE 1847 • ROSSLYN, VA 22209

Copyright National Electrical Manufacturers Association
Provided by IHS under license with NEMA
No reproduction or networking permitted without license from IHS

Not for Resale