9009279 0000015 23T

A-31-15

NATIONAL ELECTRICAL MANUFACTURERS ASSOCIATION

155 East 44th Street New York, N. Y. 10017

Proposed, New and Revised Standards

July 21, 1976

TO ALL REPRESENTATIVES OF MEMBER COMPANIES IN THE:
SWITCHGEAR SECTION
TRANSFORMER SECTION

Subject: Reaffirmation of NEMA Publications No. 201-1970 and 210-1970

Gentlemen:

At its meeting on July 14, 1976, the Codes and Standards Committee approved the reaffirmation of the following NEMA Standards Publications:

201-1970 Primary Unit Substations

210-1970 Secondary Unit Substations

Please note this on your copies of these two books.

Very truly yours,

Virginia Morgan

Virginia Morgan
Standards Publications Editor

VM:lg

Copies to: Technical Committees of All Switchgear Section Groups

Technical Committee of the Transformer Section

Copyright National Electrical Manufacturers Association
Provided by IHS under license with NEMA
No reproduction or networking permitted without license from IHS
Not for Resale

A-31-15

210-70 6470247 0000044 0

PUB. NO. 210-1970

REAPPROVED 82

NEMA

STANDARDS PUBLICATION

SECONDARY UNIT SUBSTATIONS

NATIONAL ELECTRICAL MANUFACTURERS ASSOCIATION 155 EAST 44TH STREET, NEW YORK, N. Y. 10017

Copyright National Electrical Manufacturers Association
Provided by IHS under license with NEMA
No reproduction or networking permitted without license from IHS

Not for Resale

PROBLEM HARD COPY

TABLE OF CONTENTS

		Page
Part 1,	SCOPE	1
Part 2,	REFERENCE STANDARDS	
	Transformers	1
	Switchgear	1
Part 3,	DEFINITIONS	
	Unit Substation	2
	Primary Unit Substation	2
	Secondary Unit Substation	2
	Articulated Secondary Unit Substation	2
	Oil	2
	Askarel	2
	Gas-filled Transformer	3
	Ventilated Transformer	3
	Sealed Transformer	3
Part 4,	GENERAL REQUIREMENTS	
	Ratings—Transformer Section	7
	Ratings—Incoming and Outgoing Sections	7
	Tests	7
	Arrangements	7
	Equipment Grounding	8
	Secondary and Control Wiring	8
	Nameplates	8
Part 5,	INCOMING SECTION EQUIPMENT	
	Equipment	12
Part 6,	TRANSFORMER SECTION EQUIPMENT	
	General	15
	Bushings	15
	Manual Tap Changers	15
	Maintenance Devices	15
	Future Fans	15
	Tank Construction	15
Part 7,	OUTGOING SECTION EQUIPMENT	
	Low-voltage Power-circuit-breaker Switchgear	16
	Molded-case-circuit-breaker Switchgear or Fused Switch Equipment	16
	Motor Control Centers	16
Part 8,	APPLICATION GUIDE	
	Short-circuit Calculations	17
	Incoming Section	17
	Transformer Section	18
	Outgoing Section	20
	Reference Documents	22

Copyright National Electrical Manufacturers Association
Provided by IHS under license with NEMA
No reproduction or networking permitted without license from IHS
Not for Resale
PROBLEM HARD COPY

SECONDARY UNIT SUBSTATIONS

Part 1
SCOPE

This Standards Publication applies to three-phase secondary unit substations as defined in 210-3.1. For primary unit substations, see NEMA Publication No. 201-1970.

These standards are periodically reviewed by the Power Switchgear Assemblies Voting Classification of the Switchgear Section and by the Transformer Section of NEMA for any revisions necessary to keep them up to date with advancing technology. Proposed or recommended revisions should be submitted to:

The Manager
Engineering and Safety Regulations Department
National Electrical Manufacturers Association
155 East 44th Street
New York, New York 10017

Part 2
REFERENCE STANDARDS

210-2.1 TRANSFORMERS

The requirements for the transformer section of secondary unit substations are generally covered in this publication. For requirements not covered in this publication, the transformer section shall meet the requirements of the American National Standard General Requirements for Distribution, Power and Regulating Transformers, and Shunt Reactors*, C57.12.00-1968, with the exception of paragraphs 9.1 and 9.2. For requirements not covered in this publication, air-cooled dry-type transformers shall meet the requirements of the NEMA Standards Publication for Commercial, Institutional and Industrial Dry-type Transformers, TR 27-1965.

NEMA Standard 9-9-1970.

210-2.2 SWITCHGEAR

The switchgear shall meet the requirements of the American National Standard Switchgear Assemblies, Including Metal-Enclosed Bus*, C37.20-1969, or latest revision thereof, except as otherwise indicated in this publication.

NEMA Standard 9-9-1970.

* Copies are available from the American National Standards Institute, 1430 Broadway, New York, N. Y. 10018.

Copyright National Electrical Manufacturers Association
Provided by IHS under license with NEMA
No reproduction or networking permitted without license from IHS
Not for Resale
PROBLEM HARD COPY

Part 3
DEFINITIONS

210-3.1 UNIT SUBSTATION

A substation consisting primarily of one or more transformers which are mechanically and electrically connected to and coordinated in design with one or more switchgear or motor control assemblies, or combinations thereof.

NEMA Standard 9-9-1970.

210-3.2 PRIMARY UNIT SUBSTATION

A substation in which the low-voltage section is rated 1000 volts and above.

NEMA Standard 9-9-1970.

210-3.3 SECONDARY UNIT SUBSTATION

A substation in which the low-voltage section is rated below 1000 volts.

NEMA Standard 9-9-1970.

210-3.4 ARTICULATED SECONDARY UNIT SUBSTATION

One which consists of:

1. An incoming section which provides for the connection of one or more incoming high-voltage circuits, each of which may or may not be provided with a switching device or a switching and interrupting device.

2. A transformer section which includes one or more transformers.

3. An outgoing section which provides for the connection of one or more outgoing feeders, each of which is provided with a switching and interrupting device.

These sections are normally subassemblies intended for connection in the field. Articulated secondary unit substations are usually of one of the following types:

A. Radial Type

One which has a single stepdown transformer and which has an outgoing section for the connection of one or more outgoing radial (stub end) feeders. See Fig. 1 and 2, Page 3.

B. Distributed-network Type

One which has a single stepdown transformer having its outgoing side connected to a bus through a circuit breaker equipped with relays which are arranged to trip the circuit breaker on reverse power flow to the transformer and to reclose the circuit breaker upon the restoration of the correct voltage, phase angle and phase sequence at the transformer secondary. The bus has one or more outgoing radial (stub end) feeders and one or more tie connections to a similar unit substation. See Fig. 3, Page 4.

C. Spot-network Type

One which has two stepdown transformers, each connected to an incoming high-voltage circuit. The outgoing side of each transformer is connected to a common bus through circuit breakers equipped with relays which are arranged to trip the circuit breaker on reverse power flow to the transformer and to reclose the circuit breaker upon the restoration of the correct voltage, phase angle and phase sequence at the transformer secondary. The bus has one or more outgoing radial (stub end) feeders. See Fig. 4, Page 4.

D. Secondary-selective Type
(Low-voltage-selective Type)

One which has two stepdown transformers, each connected to an incoming high-voltage circuit. The outgoing side of each transformer is connected to a separate bus through a suitable switching and protective device. The two sections of bus are connected by a normally open switching and protective device. Each bus has one or more outgoing radial (stub end) feeders. See Fig. 5 through Fig. 8, Pages 5 and 6.

NEMA Standard 9-9-1970.

210-3.5 OIL

"Oil" as used in this publication means mineral oil.

NEMA Standard 9-9-1970.

210-3.6 ASKAREL

A synthetic nonflammable insulating liquid which, when decomposed by an electric arc, evolves only nonexplosive gaseous mixtures.

NEMA Standard 9-9-1970.

Copyright National Electrical Manufacturers Association
Provided by IHS under license with NEMA
No reproduction or networking permitted without license from IHS
Not for Resale

PROBLEM HARD COPY

210-3.7 GAS-FILLED TRANSFORMER

A sealed transformer, except that the windings are immersed in a dry gas other than air or nitrogen.

NEMA Standard 9-9-1970.

210-3.8 VENTILATED TRANSFORMER

A dry-type transformer in which the windings are freely ventilated to the air outside the transformer casing.

NEMA Standard 9-9-1970.

210-3.9 SEALED TRANSFORMER

An air- or nitrogen-immersed dry-type transformer in which the air or nitrogen surrounding the windings is contained in a sealed tank which prevents their intermingling with outside air.

NEMA Standard 9-9-1970.

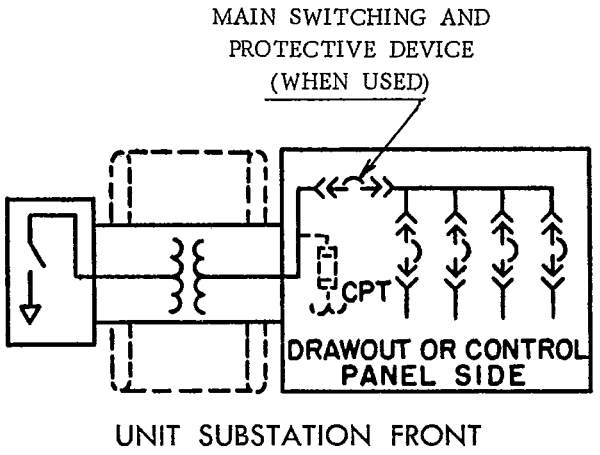

Fig. 1
Typical Radial-type Substation

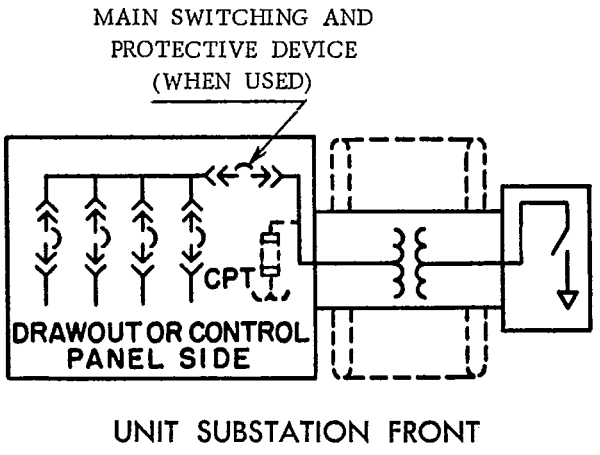

Fig. 2
Typical Radial-type Substation With Reverse Arrangement

Copyright National Electrical Manufacturers Association
Provided by IHS under license with NEMA
No reproduction or networking permitted without license from IHS
Not for Resale

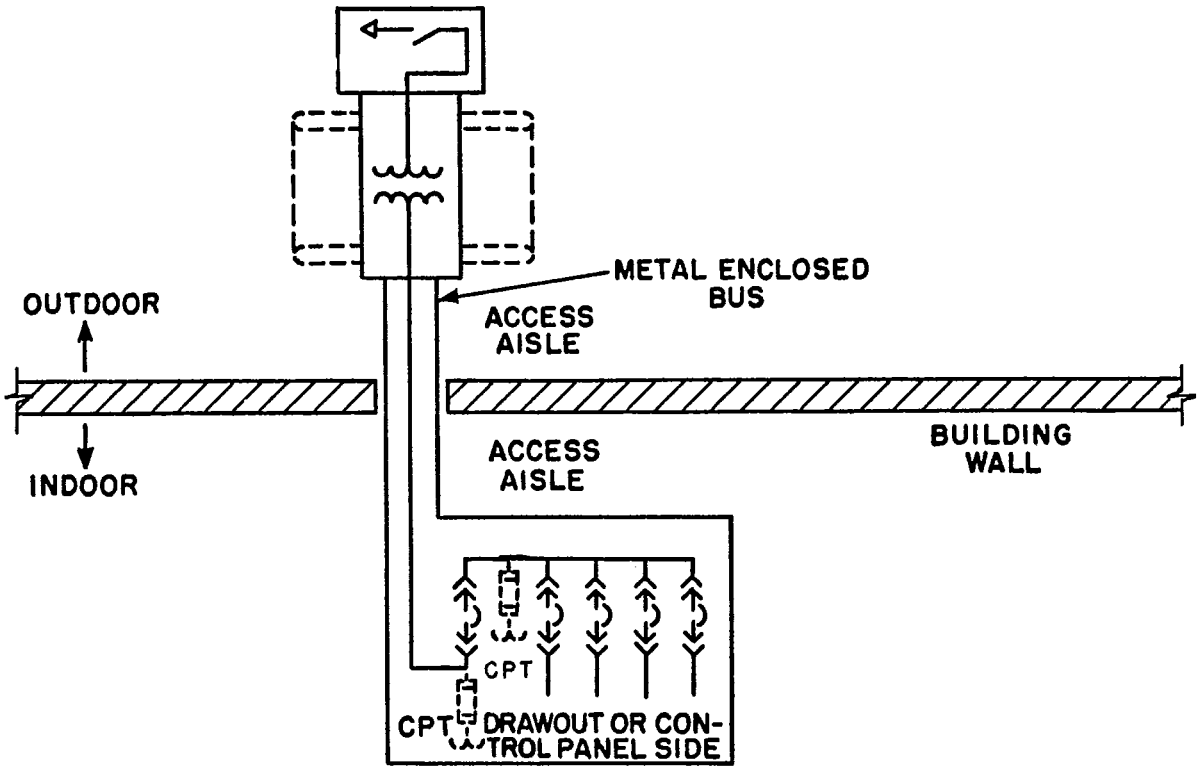

Fig. 3
Typical Distributed-network-type Substation With Indoor-outdoor Arrangement

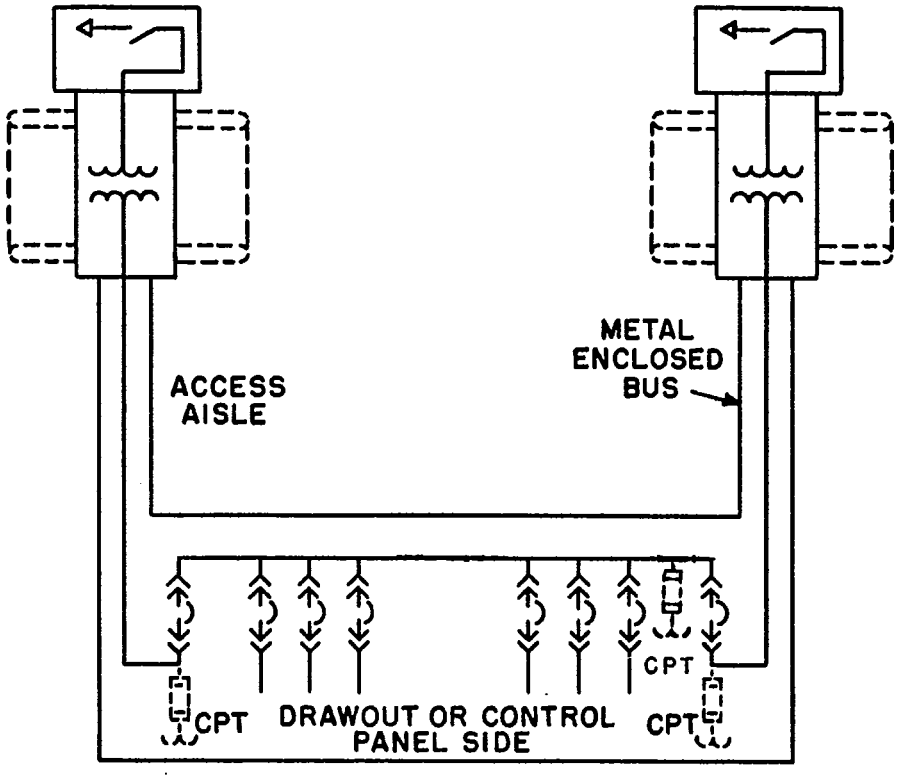

Fig. 4
Typical Spot-network-type Substation

Copyright National Electrical Manufacturers Association
Provided by IHS under license with NEMA
No reproduction or networking permitted without license from IHS
Not for Resale
PROBLEM HARD COPY

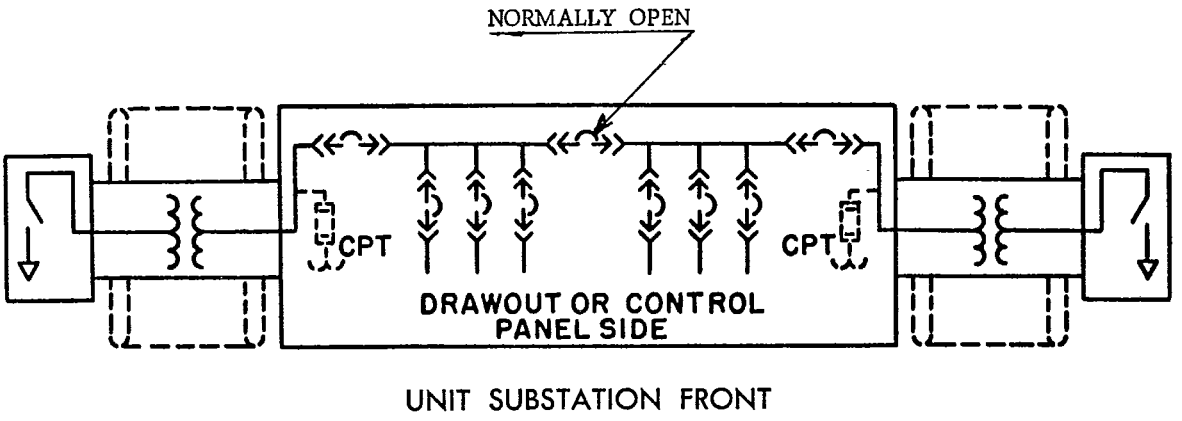

Fig. 5
Typical Secondary-selective-type Substation

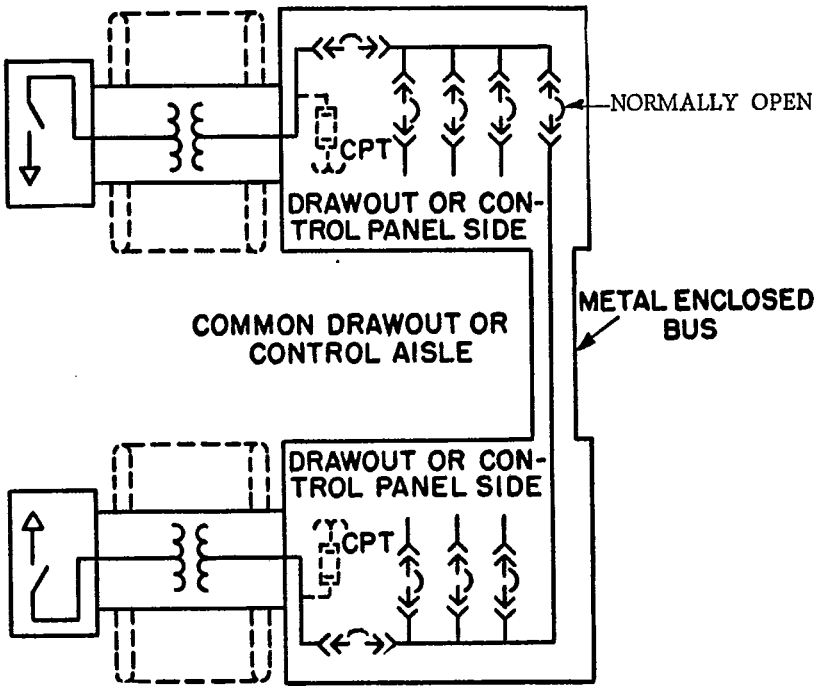

Fig. 6
Typical Secondary-selective-type Substation With A Common Drawout Aisle Arrangement

Copyright National Electrical Manufacturers Association
Provided by IHS under license with NEMA
No reproduction or networking permitted without license from IHS
Not for Resale

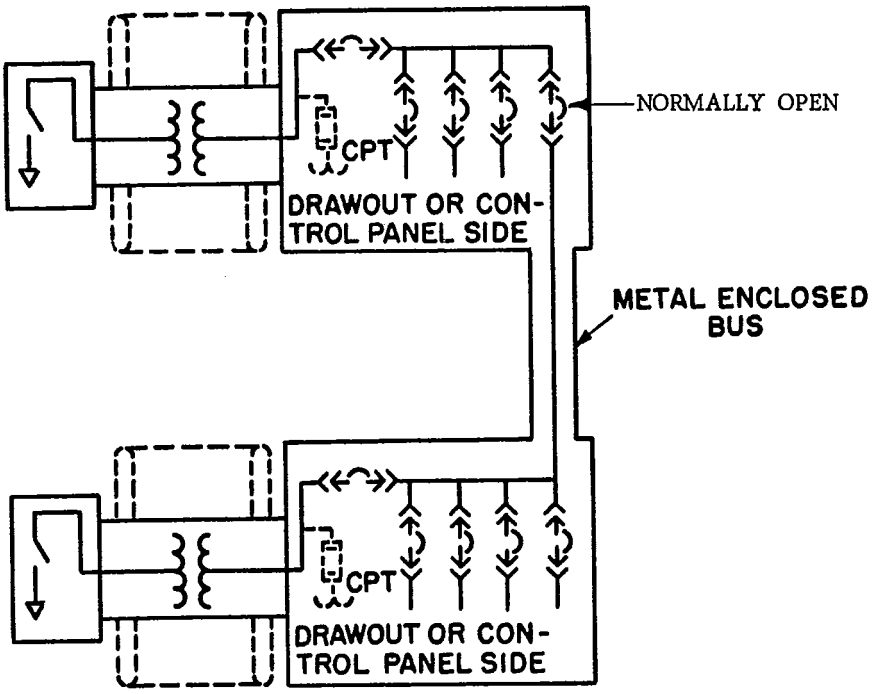

Fig. 7
Typical Secondary-selective-type Substation With Duplicate Arrangement

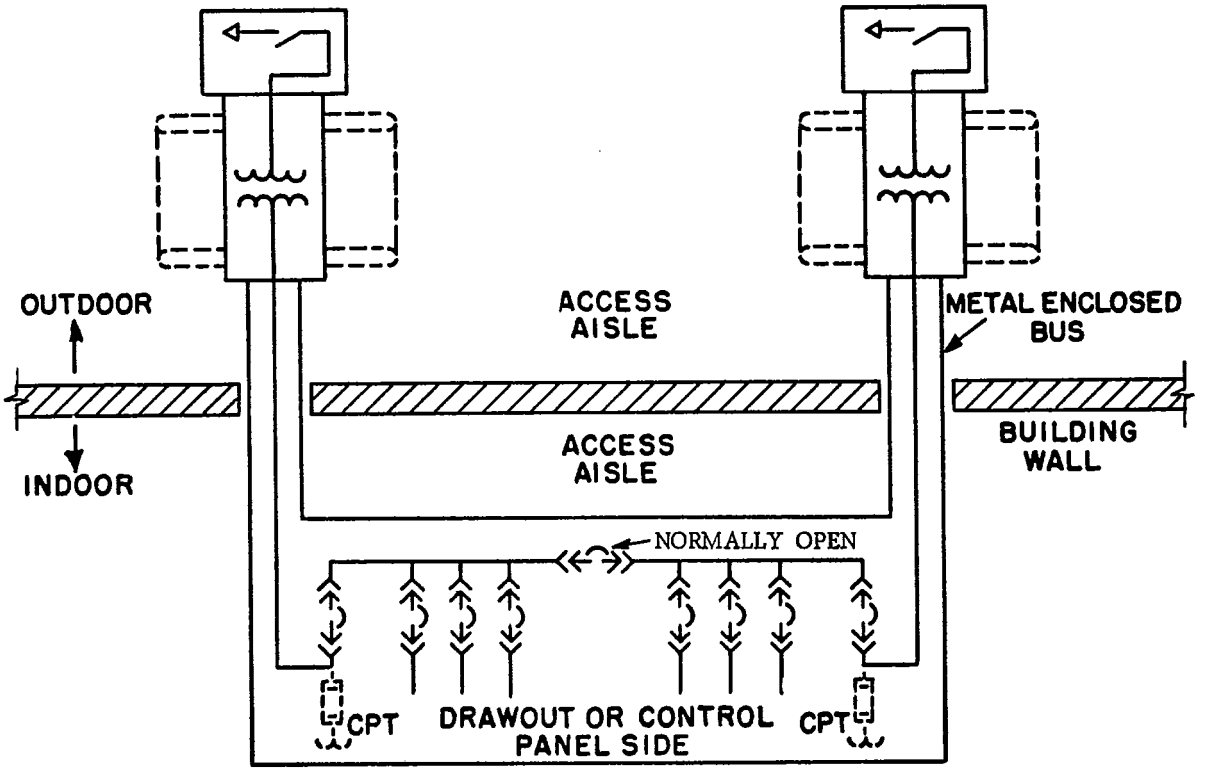

Fig. 8
Typical Secondary-selective-type Substation With Indoor-outdoor Arrangement

Copyright National Electrical Manufacturers Association
Provided by IHS under license with NEMA
No reproduction or networking permitted without license from IHS
Not for Resale
PROBLEM HARD COPY

Part 4
GENERAL REQUIREMENTS

210-4.1 RATINGS— TRANSFORMER SECTION

A. Ratings for Self-cooled Transformers (See Par. B)

The ratings of the transformer section shall be in accordance with Tables 1, 2, 3 and 4, Pages 8 to 11, inclusive. The kVA ratings are continuous and are based on the following temperature rises at altitudes of 1000 meters (3300 feet) or less:

	Maximum Temperature Rise	
	Average Winding	Hottest Spot
Liquid immersed....	65°C	80°C
Ventilated, gas filled and sealed	150°C	180°C

B. Additional Ratings for Specific Applications— kVA Ratings for Forced-air-cooled Transformers

Forced-air-cooled transformers shall include a sufficient number of automatically-controlled fans to give the kVA ratings shown in Column 3 or 4 of Table 1. The kVA ratings are continuous and are based on the maximum temperature rises given in par. A.

Fan motors shall be rated 230 volts, single phase, without centrifugal switch, and shall be individually fused or otherwise thermally protected. If a power supply for 230-volt single-phase motors is not available, provision shall be made to accommodate another single-phase motor supply voltage not exceeding 600 volts from the American National Standard Voltage Ratings for Electrical Power Systems and Equipment (60 Hz), C84.1-1970.

The fans shall be controlled by a suitable temperature control relay. (When forced-air-cooled kVA ratings and transformer fans are specified, a control power transformer in the outgoing section should also be specified if the secondary voltage is above 240 volts.)

NEMA Standard 9-9-1970.

210-4.2 RATINGS— INCOMING AND OUTGOING SECTIONS

The ratings of circuit breakers and other devices in the incoming and outgoing sections shall be selected from those shown in the American National Standards for those devices. When the transformer is self-cooled only or is self-cooled with inherent provisions for future forced air cooling, the ratings of the incoming and outgoing circuit devices and conductors shall be based on the self-cooled rating of the transformer unless otherwise specified. When the transformer is forced air cooled, the ratings of the incoming and outgoing circuit devices and conductors shall be based on the forced-air-cooled rating of the transformer. In either case, consideration shall be given to the overload capabilities of the transformer (see 210-8.4, par. C).

NEMA Standard 9-9-1970.

210-4.3 TESTS

The incoming section, transformer section and outgoing section shall be tested in accordance with the American National Standards and NEMA Standards Publications listed in 210-2.1 and 210-2.2.

The dielectric test voltage for gas-filled and sealed transformers shall be in accordance with Table 3, Page 10. The impulse test values for gas-filled and sealed transformers shall be in accordance with Table 5, Page 11.

NEMA Standard 9-9-1970.

210-4.4 ARRANGEMENTS

Typical arrangements of articulated secondary unit substations are shown in Fig. 1 through 8 (Pages 3 to 6, inclusive). These figures indicate the orientation of equipment only and do not show construction details or number of components.

An[illegible]gineering Information 9-9-1970.

Copyright National Electrical Manufacturers Association
Provided by IHS under license with NEMA
No reproduction or networking permitted without license from IHS
Not for Resale

PROBLEM HARD COPY

210-4.5 EQUIPMENT GROUNDING

Provisions shall be made for the connection of each section of the unit substation to a station ground.

NEMA Standard 9-9-1970.

210-4.6 SECONDARY AND CONTROL WIRING

Where sections of unit substations are to be close coupled, the necessary secondary and control wiring shall be provided in metal enclosures or conduits. Where transformers are at a location remote from the switchgear, terminal blocks shall be provided for the user's external interconnections.

NEMA Standard 9-9-1970.

210-4.7 NAMEPLATES

Each incoming, transformer and outgoing section shall have a nameplate in accordance with the American National Standards listed in 210-2.1 and 210-2.2.

NEMA Standard 9-9-1970.

Table 1
Self-cooled and Future Forced-air-cooled (FA) kVA Ratings

Self-cooled Ratings, kVA		Future FA Ratings, kVA*		
Liquid Immersed and Ventilated	Gas Filled	Liquid Immersed	Ventilated	Gas Filled and Sealed
(1)	(2)	(3)	(4)	(5)
112.5	....	....	....	Not applicable
150	....	....	....	
225	....	....	....	
300	....	....	....	
500	....	....	....	
750	750	862	1000	
1000	1000	1150	1333	
1500	1500	1725	2000	
2000	2000	2300	2667	
2500	2500	3125	3333	

* To obtain these ratings, self-cooled transformers shall have provision for the future addition of fan cooling equip'

Copyright National Electrical Manufacturers Association
Provided by IHS under license with NEMA
No reproduction or networking permitted without license from IHS
Not for Resale
PROBLEM HARD COPY

Table 2
Range of Self-cooled Ratings in kVA and High- and Low-voltage Ratings

High-voltage Ratings, Volts*	Low-voltage Ratings, Volts	Range of Self-cooled Ratings, kVA		
		Liquid Immersed	Ventilated	Gas Filled and Sealed
2400	208Y/120 240	112.5-1000	112.5-1000	750-1000
	480Y/277 480	112.5-1500	112.5-1500	750-1500
4160 4800	208Y/120 240	112.5-1000	112.5-1000	750-1000
	480Y/277 480	112.5-1500	112.5-1500	750-1500
6900 7200	208Y/120 240	112.5-1000	300-1000	750-1000
	480Y/277 480	112.5-2500	300-2500	750-2500
12000 12470 13200 13800	208Y/120 240	112.5-1000	300-1000	750-1000
	480Y/277 480	112.5-2500	300-2500	750-2500
22900	208Y/120 240	500-1000	....	....
	480Y/277 480	500-2500	....	....
34400	208Y/120 240	750-1000	....	....
	480Y/277 480	750-2500	....	....

* All connections are delta.

NOTE—The hyphen separating the kVA ratings indicates that all of the intervening kVA ratings shown in Table 1 are included.

Copyright National Electrical Manufacturers Association
Provided by IHS under license with NEMA
No reproduction or networking permitted without license from IHS
Not for Resale
PROBLEM HARD COPY

Copyright National Electrical Manufacturers Association
Provided by IHS under license with NEMA
No reproduction or networking permitted without license from IHS
Not for Resale

Table 3
Taps, Insulation Characteristics and Dielectric Test Voltages

Rated Voltage, Volts	Insulation Class, kV	High-voltage Taps, Volts at Rated kVA	Liquid Immersed		Ventilated		Gas Filled and Sealed	
			Low-frequency Test, kV	BIL, kV	Low-frequency Test, kV	BIL, kV	Low-frequency Test, kV	BIL, kV
208Y/120	1.2	.....	10	30	4	10	10	30
240	1.2	.....	10	30	4	10	10	30
480Y/277	1.2	.....	10	30	4	10	10	30
480	1.2	.....	10	30	4	10	10	30
2400	2.5	2520/2460/2340/2280	15	45	10	20	15	45
4160	5.0	4360/4260/4055/3950	19	60	12	25	19	60
4800	5.0	5040/4920/4680/4560	19	60	12	25	19	60
6900	8.7	7245/7070/6730/6555	26	75	19	35	26	75
7200	8.7	7560/7380/7020/6840	26	75	19	35	26	75
12 000	15	12 600/12 300/11 700/11 400	34	95	31	50	34	95
12 470	15	13 090/12 780/12 160/11 850	34	95	31	50	34	95
13 200	15	13 860/13 530/12 870/12 540	34	95	31	50	34	95
13 800	15	14 400/14 100/13 500/13 200	34	95	31	50	34	95
22 900	25	24 100/23 500/22 300/21 700	50	150	..	..	..	..
34 400	34.5	36 200/35 300/33 500/32 600	70	200	..	..	..	..

* for impulse test see 4.3 and Table 5.

6470247 0000055 4
PROBLEM HARD COPY

Table 4
Impedance Voltages

High-voltage Rating, Volts	kVA Rating	Percent Impedance Voltage
2400-13 800	112.5-225	Not less than 2.0
2400-13 800	300-500	Not less than 4.5
2400-13 800	750-2500	5.75
22 900	All	5.75
34 400	All	6.25

NOTE—The hyphen separating voltage and kVA ratings indicates that all of the intervening ratings shown in Tables 1 and 2 are included.

Table 5
Impulse Test Values for Gas-filled and Sealed Transformers

Insulation Class, kV	BIL, kV	Impulse Test		
		Full Wave, kV Crest	Chopped Wave	
			kV Crest	Minimum Time to Flashover, Microseconds
1.2	30	30	30	1.0
2.5	45	45	45	1.25
5.0	60	60	60	1.5
8.7	75	75	75	1.6
15.0	95	95	95	1.7

Copyright National Electrical Manufacturers Association
Provided by IHS under license with NEMA
No reproduction or networking permitted without license from IHS

Not for Resale

PROBLEM HARD COPY

Part 5
INCOMING SECTION EQUIPMENT

210-5.1 EQUIPMENT

Incoming sections shall consist of one of the following:

A. Primary Cover Bushings (25 kV Insulation Class and Above)

Cover bushing on the primary side of the transformer in the number and ratings required. See Fig. 9.

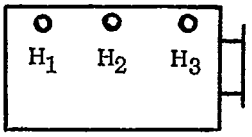

Fig. 9

B. Air- or Liquid-filled Terminal Chamber

Air- and liquid-filled terminal chambers shall be used to provide space for bushings, potheads, stress cones or other terminating means for either single or looped incoming circuits. See Fig. 10.

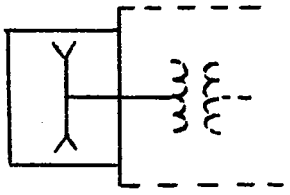

Fig. 10
Air- or Liquid-filled Terminal Chamber

C. Distribution Oil Cutouts (Fused or Unfused)

Distribution oil cutouts shall meet the requirements of American National Standards C37.40-1962, C37.41-1962, C37.47-1962 and, specifically, C37.44-1962. Where there is a possibility that the cutout may be opened on currents higher than its interrupting rating, interlocks shall be provided. Typical arrangements are shown in Fig. 11 and 12.

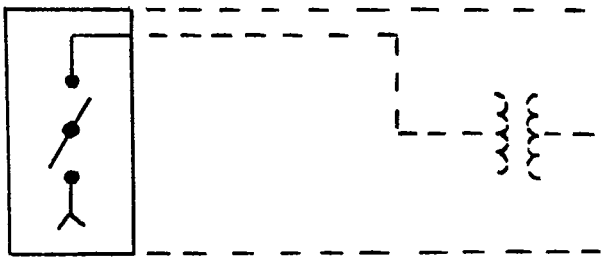

Fig. 11
Oil Interrupter Cutouts—Unfused

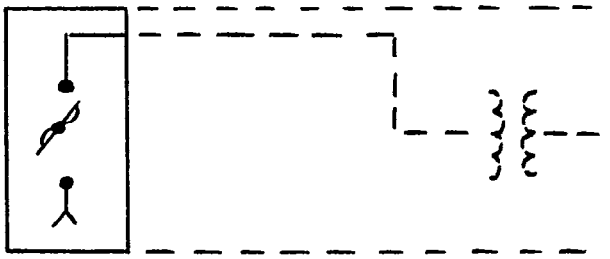

Fig. 12
Oil Interrupter Cutouts—Fused

D. Liquid-immersed Interrupter Switches

Oil- or askarel-immersed switches shall be capable of interrupting the no-load magnetizing current of the transformer.

Askarel-immersed switches shall be interlocked with an interrupter(s) on the secondary side of the transformer so that the askarel-immersed switch may be operated only when the transformer secondary is open.

Where load-break oil switches are applied and the transformer load current, including any overload ratings, exceeds the interrupting rating of the switch, locks or interlocks shall be provided.

Where available short-circuit currents exceed the fault-closing rating of liquid-immersed switches, interlocks are recommended to prevent closing of the switch on fault currents. (This sentence has been approved as Authorized Engineering Information.)

Copyright National Electrical Manufacturers Association
Provided by IHS under license with NEMA
No reproduction or networking permitted without license from IHS
Not for Resale
PROBLEM HARD COPY

Terminating means shall accommodate single, selector or looped circuits as required. Typical arrangements are shown in Fig. 13 and 14.

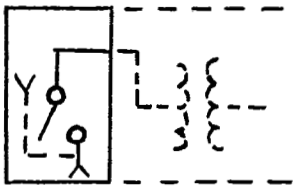

Fig. 13
Single Circuit

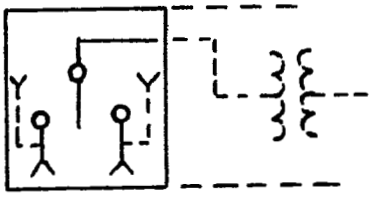

Fig. 14
Selector Circuit

E. Air Interrupter Switches (Fused or Unfused)

Fused and unfused air interrupter switches shall meet the requirements of the following American National Standards:

C37.20-1965 Switchgear Assemblies, Including Metal-Enclosed Bus, paragraph 20.6.4

C37.30-1962 Definitions and Requirements for High Voltage Air Switches, Insulators and Bus Supports

Fuses shall meet the requirements of the American National Standard Specifications for Power Fuses and Fuse Disconnecting Switches, C37.46-1962.

Space shall be provided for bushings, potheads, stress cones or other terminating means for either single or looped incoming circuits.

Where the transformer load current, including any overload ratings, exceeds the interrupting rating of the switch, interlocks shall be provided. The switch shall have the fault closing ability specified in paragraph 20-6.4.8 of American National Standard C37.20-1965, or latest revision thereof.

Typical arrangements are shown in Fig. 15 through Fig. 19.

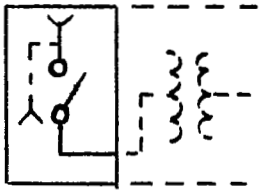

Fig. 15
Two Position (Unfused)

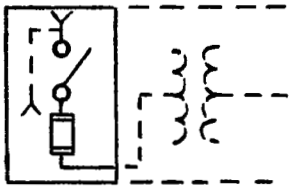

Fig. 16
Two Position (Fused)

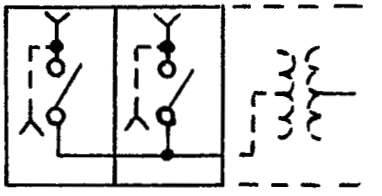

Fig. 17
Dual Switch (Unfused)

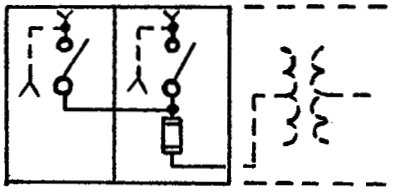

Fig. 18
Dual Switch (Fused)

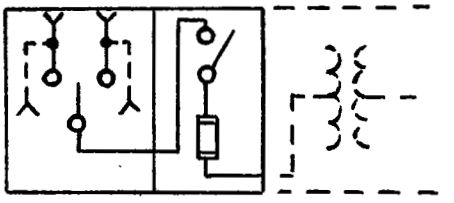

Fig. 19
Selector Switch
(Fused or Unfused)

Copyright National Electrical Manufacturers Association
Provided by IHS under license with NEMA
No reproduction or networking permitted without license from IHS
Not for Resale
PROBLEM HARD COPY

F. Metal-clad Switchgear

Metal-clad switchgear shall meet the requirements for such switchgear as given in the American National Standard C37.20. Power circuit breakers shall meet the requirements of American National Standards C37.03 through C37.011.

Space shall be provided for bushings, potheads, stress cones or other terminating means for either single or looped incoming circuits.

Typical arrangements are shown in Fig. 20 through Fig. 23.

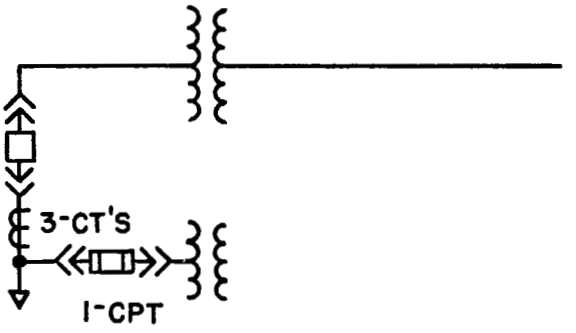

Fig. 20
One Incoming Line

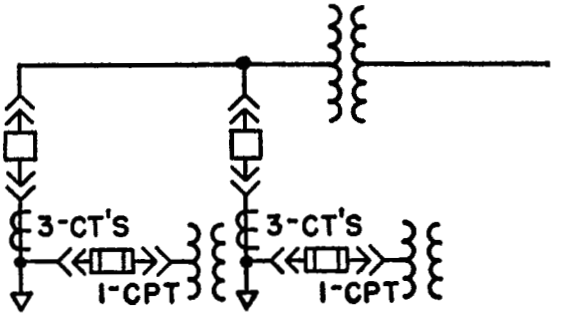

Fig. 21
Two Incoming Lines

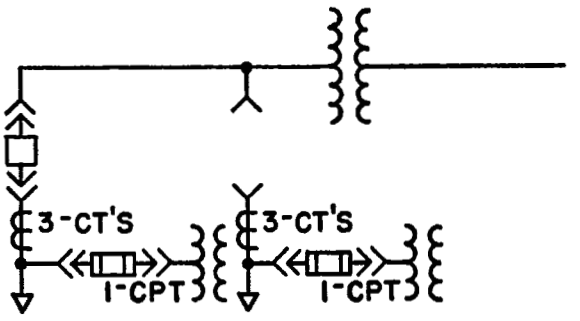

Fig. 22
Two Incoming Lines,
Selector Function

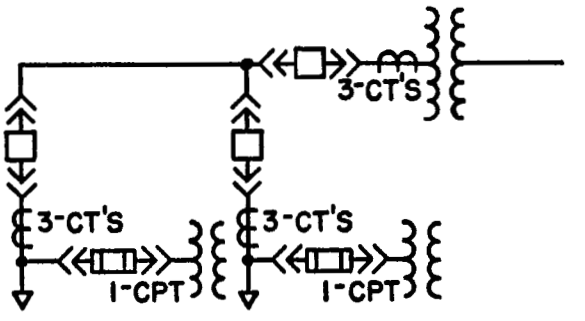

Fig. 23
One Incoming Line,
Looped

NEMA Standard 9-9-1970.

Copyright National Electrical Manufacturers Association
Provided by IHS under license with NEMA
No reproduction or networking permitted without license from IHS
Not for Resale
PROBLEM HARD COPY

Part 6
TRANSFORMER SECTION EQUIPMENT

210-6.1 GENERAL

Transformers shall be of the liquid-immersed (oil or askarel), gas-filled, sealed, or ventilated type. Where the incoming, transformer and outgoing sections are in a continuous enclosure, barriers shall be provided between each section.

NEMA Standard 9-9-1970.

210-6.2 BUSHINGS

The insulation class of the line bushings for liquid-immersed, gas-filled and sealed transformers shall be equal to or greater than the insulation class of the windings to which they are connected.

A low-voltage neutral bushing shall be provided on units having a wye-connected winding.

When cover bushings are used, they shall meet the requirements of American National Standard Outdoor Apparatus Bushings, C76.1. When sidewall bushings are used, they shall be in a protective enclosure and shall be fully coordinated with the winding and the external equipment to which they are connected.

NEMA Standard 9-9-1970.

210-6.3 MANUAL TAP CHANGERS

Liquid-immersed, gas-filled and sealed transformers shall have tap changers suitable for changing taps when the transformer is de-energized and arranged for external operation. The drive mechanism shall be located on the cover or on any convenient segment of the sidewall.

Ventilated dry-type transformers shall have an internal terminal linkage for changing taps.

NEMA Standard 9-9-1970.

210-6.4 MAINTENANCE DEVICES

The following maintenance devices shall be provided as a part of each transformer:

A. Oil- or Askarel-immersed

1. Drain and sampling valves.
2. Filter press connections.
3. Liquid level gauge without alarm contacts.
4. Ground pad.
5. Provision for lifting and jacking.
6. Top liquid dial-type thermometer without alarm contacts.
7. Pressure-vacuum gauge.
8. Pressure-relief device (askarel-immersed units only).

B. Ventilated Dry

1. Removable side sheets.
2. Ground pad.
3. Provision for lifting and jacking.

C. Gas-filled

1. Gas filling valve.
2. Over-under pressure detector device.
3. Ground pad.
4. Provision for lifting and jacking.
5. Pressure-vacuum gauge.

D. Sealed Dry

1. Air or nitrogen filling valve.
2. Over-under pressure detector device.
3. Ground pad.
4. Provision for lifting and jacking.
5. Pressure-vacuum gauge.

NEMA Standard 9-9-1970.

210-6.5 FUTURE FANS

Unless otherwise specified, each liquid-immersed and ventilated transformer having a self-cooled rating of 750 kVA and above shall have provision for the future addition of automatically-controlled fans in accordance with 210-4.1, par. B. Provision shall be made for the future installation of a temperature control relay for the fans. (Unless power is supplied from a separate source, provision for a control power transformer shall be made in the outgoing section if the secondary voltage rating is above 240 volts.)

NEMA Standard 9-9-1970.

210-6.6 TANK CONSTRUCTION

Each liquid-immersed, gas-filled and sealed transformer shall have a sealed tank with a welded-on cover.

NEMA Standard 9-9-1970.

Copyright National Electrical Manufacturers Association
Provided by IHS under license with NEMA
No reproduction or networking permitted without license from IHS
Not for Resale

Part 7
OUTGOING SECTION EQUIPMENT

210-7.1 LOW-VOLTAGE POWER-CIRCUIT-BREAKER SWITCHGEAR

Low-voltage power-circuit-breaker switchgear shall meet the requirements of American National Standard C37.20. Low-voltage power circuit breakers used in this switchgear shall meet the requirements of American National Standards C37.13 and C37.16. When fused low-voltage power circuit breakers are used, they shall meet the requirements of American National Standard C37.28 and C37.16.

NEMA Standard 9-9-1970.

210-7.2 MOLDED-CASE-CIRCUIT-BREAKER SWITCHGEAR OR FUSED SWITCH EQUIPMENT

Molded-case-circuit-breaker switchgear and fused switch equipment shall meet the requirements of Underwriters' Laboratories, Inc., Publication No. UL 891. *

Molded-case circuit breakers used in this switchgear shall meet the requirements of Underwriters' Laboratories, Inc., Publication No. UL 489. Switches used in this equipment shall meet the requirements of Underwriters' Laboratories, Inc., Publication No. UL 98, fuses shall meet the requirements of Publication No. UL 198, and fuseholders shall meet the requirements of Publication No. UL 512.

NEMA Standard 9-9-1970.

210-7.3 MOTOR CONTROL CENTERS

Motor control centers shall meet the requirements of Part ICS 2-322 of the NEMA Standards Publication for Industrial Controls and Systems, ICS-1970, or latest revision thereof.

NEMA Standard 9-9-1970.

* Copies of UL publications are available from the Underwriters' Laboratories, Inc., 1285 Walt Whitman Road, Melville, L.I., New York 11746.

Copyright National Electrical Manufacturers Association
Provided by IHS under license with NEMA
No reproduction or networking permitted without license from IHS
Not for Resale

Part 8
APPLICATION GUIDE

210-8.1 SHORT-CIRCUIT CALCULATIONS

Short-circuit current values must be determined for the incoming and outgoing sections to allow for the selection of adequate switching devices. Procedures for making the calculations are included in many documents such as the American National Standard C37.010, Clause 010-5.3, or IEEE Publication No. 141, Chapter IV. In C37.010, the "E/X Simplified Method" covered in Clause 010-5.3.1 will usually be found to be satisfactory. In IEEE Publication No. 141*, short-circuit-current values for common substation sizes and conditions are presented in tabular form in Chapter VII, Table 7.10.

Since the interrupting ratings of most protective devices are based on symmetrical current, it is only necessary in applying these devices to consider the maximum symmetrical short-circuit current. The manufacturer of the protective device will have taken into account the maximum possible asymmetry in testing the device.

* Copies are available from the Institute of Electrical and Electronics Engineers, 345 East 47th Street, New York, N.Y. 10017.

NEMA Standard 9-9-1970.

210-8.2 INCOMING SECTION

In unit substation applications, it is desirable to be able to isolate the transformer from the incoming circuit. An exception occurs when the unit substation transformer is the only load on the incoming circuit, in which case the switching device at the source of the circuit may serve to isolate the transformer.

A. High-voltage Power Circuit Breakers

High-voltage power circuit breakers with relays provide a high level of system protection and selectivity. In cases of outages, service can be restored quickly.

B. Air Interrupter Switches

Air interrupter switches are usually equipped with fuses to provide protection for the transformer. In those applications where transformer protection is provided at the source of the circuit, the interrupter switch may be unfused. For additional information, see the American National Standard C37.20-1965, Paragraphs 20-6.4.7 and 20-6.4.8.

C. Power Fuses for Interrupter Switchgear

Fuses must be selected to carry, without damage, the transformer magnetizing inrush current and to clear a secondary short circuit in less time than the transformer is designed to withstand the short-circuit current given in American National Standard C57.12.00-1968. Clauses 10.3 and 10.4 in C57.12.00 give the mechanical limits and thermal limits, respectively, of transformers under short-circuit conditions.

Primary fuses usually cannot be applied to protect a transformer from thermal overloads. For complete protection of the transformer, a low-voltage switching and protective device should be provided for the transformer secondary. The primary fuses and the secondary switching and protective device should be selected so as to provide coordination over as wide a range of short-circuit currents as possible. It may be impossible to provide selectivity at all levels of available short-circuit currents, particularly those approaching the maximum level.

D. Other Switching Devices

Liquid-immersed switches or oil cutouts may be applied within their ratings. The precautions associated with the use of oil-filled equipment should be observed as indicated for oil-immersed transformers in 210-8.3, par. C.1.

E. Interlocks

Switching devices that have the ability to open or close only transformer magnetizing current should be interlocked with an interrupting device on the secondary side of the transformer to prevent operation of the switch until the interrupting device is open.

Distribution oil cutouts or interrupter switches are normally used on transformers having a full-load current which is less than the interrupting rating of the switch. The switch can be operated safely only if current in excess of the interrupting current rating of the switch is not flowing at the time the switch is opened.

Currents in excess of the transformer full-load current may be caused by such things as temporary or prolonged overloads, transformer inrush currents, motor starting inrush or accelerating currents, circulating currents due to high- or low-voltage tie

Copyright National Electrical Manufacturers Association
Provided by IHS under license with NEMA
No reproduction or networking permitted without license from IHS
Not for Resale

circuits and faults. The most positive method of protecting equipment and operators from the serious damage and injury which can result if a switching device is opened or closed under these conditions is to interlock the switching device with the secondary interrupting device by means of a key interlock to assure that all load is removed from the transformer before the switching devices are operated.

Where the installation includes more than one incoming circuit, interlocks may be provided to prevent parallel operation of the incoming circuits.

Authorized Engineering Information 9-9-1970.

210-8.3 TRANSFORMER SECTION

The selection of unit substation transformers is based upon such factors as location, impulse rating, fan-cooled ratings, maintenance requirements, etc.

A. kVA Rating

The kVA rating of the transformer section must primarily be sufficient to handle the immediate load required. Consideration should be given to the future load growth which might be required by expanding or changing facilities. When substantial load growth is anticipated, it is usually desirable to install initially a single-transformer substation with a main switching and protective device (Fig. 1 on Page 3 or Fig. 3 on Page 4); this can be readily expanded to a two-transformer substation (Fig. 5 on Page 5 or Fig. 8 on Page 6) when the additional capacity is needed.

For the application of demand factors and diversity factors to the total connected load, refer to the IEEE Electric Power Distribution for Industrial Plants, Publication No. 141, and the IEEE Electric Systems for Commercial Buildings, Publication No. 241. Fan cooling may be used to provide higher kVA ratings to meet load growth. For secondary-selective systems or network systems, fan cooling is often used to provide higher ratings during periods when one or more transformers is out of service.

For loading guides, see the American National Standard Guide for Loading Dry-Type Distribution and Power Transformers, C57.96*, and the NEMA Guide for Loading Oil-immersed Power Transformers With 65°C Average Winding Rise, TR 98-1964.

* Does not apply to ventilated units.

B. Voltage Rating

The primary voltage rating is usually selected to be equal to the nominal value of the supply voltage with two approximately 2 1/2 percent taps above and below the rated voltage to adjust for variations in supply voltage.

C. Location

The physical location of the unit substation is of major importance in determining the type of transformer to be used for a particular installation. The environment at a particular location may preclude the use of some types or make one type more desirable than another.

1. Indoor and Outdoor Locations—Askarel-immersed, gas-filled and sealed transformers are, in general, suitable for use both indoors and outdoors.

   Oil-immersed transformers are normally suitable only for outdoor locations. They may be installed indoors only when located in fireproof vaults and where local codes permit. See the American National Standard National Electrical Code, C1-1968 (Article 450, Sections 450-21 through 450-48; and Articles 500 through 503, Sections 501-2, 502-2 and 503-2), and the American National Standard National Electrical Safety Code, C2 (Rules 110-B, 115, 153 and 172).

   Ventilated transformers are suitable only for indoor locations.

2. Ambient Conditions—Ambient conditions are important factors in the application of ventilated transformers which are designed for installation in dry locations having a clean, dry, cooling air supply and free from dust, dirt or fumes.

   Ambient conditions, other than temperature and altitude, are not critical in the location of liquid-immersed and gas-filled transformers.

3. Audible Sound Level—If noise is a factor in the location and operation of any transformer, special consideration should be given to the installation of the equipment. The manufacturer should be consulted.

Copyright National Electrical Manufacturers Association
Provided by IHS under license with NEMA
No reproduction or networking permitted without license from IHS
Not for Resale

D. Surge Protection

When connected to circuits which are subject to lightning or switching surges, substations should be equipped with surge protection equipment which has been selected to limit voltage surges to values below the surge ratings of the transformers and other equipment. Surge protection is recommended for all ventilated transformers because of their relatively low impulse voltage ratings. Figure 24 shows a typical application of lightning arresters intended to protect a unit substation transformer.

E. Fan-cooled Ratings

For double-transformer unit substations, where each transformer may have to supply the total load of the substation during an emergency or during maintenance, the continuous fan-cooled rating of the transformer is often a factor in determining the transformer to be used.

F. Maintenance Requirements

The difference in maintenance requirements for the various types of transformer sections may be a factor in determining the type of transformer to be used for a particular application.

The maintenance for liquid-immersed transformers should include at least periodic checking of the tank for pressure tightness and sample testing of the liquid dielectric strength. The dielectric strength can be restored by filtering.

The maintenance for gas-filled and sealed transformers should consist of periodic inspections of pressure tightness. An indication of positive pressure is generally sufficient since these units are usually sealed with positive pressure.

The maintenance for ventilated transformers should consist of periodic cleaning of the core and coils. Special precautions should be taken to remove any condensed moisture before re-energizing ventilated transformers after a period of shutdown.

For additional information on maintenance requirements, see the following American National Standard Guides:

C57.93 Guide for Installation and Maintenance Of Oil-Immersed Transformers

C57.94 Guide for Installation and Maintenance of Dry-Type Transformers

Authorized Engineering Information 9-9-1970.

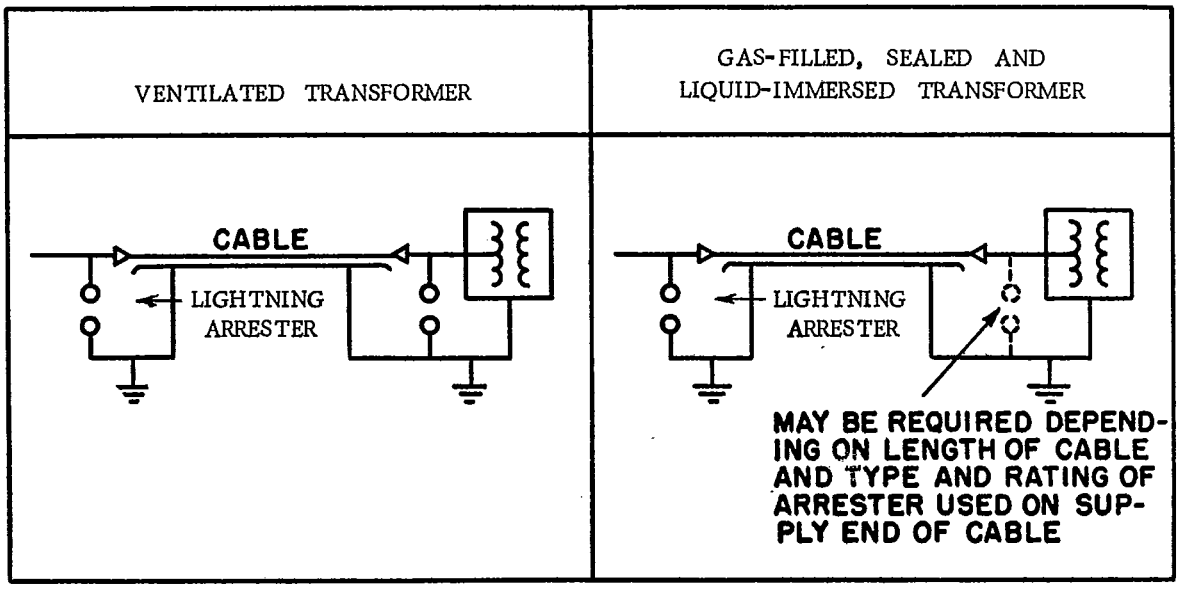

Fig. 24

Copyright National Electrical Manufacturers Association
Provided by IHS under license with NEMA
No reproduction or networking permitted without license from IHS
Not for Resale
PROBLEM HARD COPY

210-8.4 OUTGOING SECTION

A. Selection of Low-voltage Protective Devices

Switches and fuses provide switching and protection for those circuits where faults occur infrequently and switching requirements are not severe. Circuit breakers provide switching and protection for those circuits where faults are frequent or where switching requirements are severe. Devices that can be reclosed quickly should be considered for applications where a sustained interruption to a circuit cannot be tolerated.

Current-limiting fuses have a high interrupting ability (up to 200,000 amperes). Their speed of operation and current-limiting action can provide protection to coordinated equipment in circuits that have high available short-circuit currents.

Current-limiting fuses are also used with switches for lighting circuits or other circuits where single phasing is not a problem. Where there may be damage from single phasing, a switching and protective device that operates to open all three phases is recommended. When fuses are used with switches, the ratings of the switches must be coordinated with the maximum let-through energy and the peak let-through current of the fuse.

Current-limiting fuses are often applied in series with circuit breakers or motor starters. In these applications, the current-limiting fuse provides protection in the short-circuit-current range above the capability of the circuit breaker or motor starter, and the circuit breaker or motor starter provides protection in the overload range and for short circuits within their capability.

The motor starter consists basically of a switching means (usually a contactor) and a protective means (usually a series overload relay). For unit substation applications, a combination motor starter which provides a fused switch or a circuit breaker in combination with a contactor and overload relay is used. The fused switch or circuit breaker provides a disconnecting means and short-circuit protection. The contactor provides for the normal switching function, and the overload relay provides the motor starting and running overload protection. When a combination starter includes a molded case circuit breaker, the circuit breaker often has only an instantaneous overcurrent trip to provide for short-circuit protection.

Power operated or independently manually operated low-voltage power circuit breakers are sometimes used as motor starters for large motors which are started and stopped infrequently. They should be selected to provide overload protection and short-circuit protection as well as the switching function. They should not be applied where starting may be frequent since low-voltage power circuit breakers are not designed for excessive repetitive duty. For the repetitive duty of low-voltage power circuit breakers, see American National Standard C37.16.

B. Determination of Interrupting Ratings of Switching and Protective Devices

1. Radial-type Substations—For the transformer main secondary switching and protective device, the short-circuit-current contribution of only the stepdown transformer should be used to determine the interrupting rating.

   For the outgoing feeder circuits, the short-circuit-current contribution of the stepdown transformer plus the motor contribution from the secondary bus should be used.

2. Distributed-network-type Substations—To determine the interrupting rating for the transformer main secondary switching and protective device, the short-circuit current should be computed in one of two ways, as follows:

   a. Where the connections from the transformer to the secondary switching and protective device are short and well protected, the possibility of a fault between the transformer and the switching and protective device may be ignored; in this case, the short-circuit current of one stepdown transformer should be used.

   b. Where the possibility of a fault between the transformer and the switching and protective device may not be ignored, the short-circuit-current contribution from all sources connected to the bus, except the transformer, must be computed. This will include the motor contribution from the bus plus the contribution from other sources through the tie circuits. This total contribution must then be compared with the contribution from the transformer, and the larger of the two used to determine the interrupting rating.

Copyright National Electrical Manufacturers Association
Provided by IHS under license with NEMA
No reproduction or networking permitted without license from IHS
Not for Resale

For the outgoing feeder circuit switching and protective devices, the short-circuit-current contribution from the transformer plus the motor contribution from the bus plus the contribution from other sources through the tie circuits should be used to determine the interrupting rating.

For the switching and protective devices in the tie circuits, the short-circuit current as computed for the feeder circuits less the short-circuit-current contribution through the tie circuit being considered should be used to determine the interrupting rating.

3. Spot-network-type Substations—To determine the interrupting rating for the transformer main secondary switching and protective device, the short-circuit current should be computed in one of two ways, as follows:

   a. Where the connections from the transformer to the secondary switching and protective device are short and well protected, the possibility of a fault between the transformer and the switching and protective device may be ignored; in this case, the short-circuit current of one stepdown transformer should be used.

   b. Where the possibility of a fault between the transformer and the switching and protective device may not be ignored, the short-circuit contribution of one stepdown transformer plus the motor contribution from the bus should be used.

   For the outgoing feeder circuits, the short-circuit-current contribution from both stepdown transformers plus the motor contribution from the bus should be used to determine the interrupting rating.

4. Secondary-selective-type Substations—For the transformer main secondary switching and protective device, the short-circuit-current contribution of one stepdown transformer should be used to determine the interrupting rating.

   For the outgoing feeder circuits and the bus tie, the short-circuit-current contribution of one stepdown transformer plus the motor contribution from both of the bus sections should be used.

C. Continuous Current Rating of Transformer Main Secondary Switching and Protective Device and Connections

The transformer main secondary switching and protective devices and connections should have a continuous current rating which is approximately 25 percent greater than the continuous current rating of the transformer since transformers often carry short-time loads above their nameplate ratings due to short duty cycles and low ambient temperatures.

When selecting the continuous current rating of the transformer main secondary switching and protective devices and connections, consideration should also be given as to whether or not the transformer has, or will have in the future, a continuous forced-air-cooled rating.

D. Transformer Main Secondary Switching and Protective Device

A transformer main secondary switching and protective device should be used for the following reasons:

1. In case of an emergency, it is quicker and simpler to de-energize the entire load by opening a transformer main secondary switching and protective device at each substation than to open all feeder switching and protective devices.

   In case of trouble in the primary cable or transformer, it is often desirable to disconnect the transformer from the low-voltage bus and to supply the bus from an alternate source. The transformer can be disconnected more quickly, safely and conveniently by opening a main switching and protective device than by unbolting bus work.

2. It provides bus fault protection and back-up protection for the feeder switching and protective devices. In addition, where a main secondary switching and protective device is present, it may provide overload protection for the transformer, and less sensitive primary protection may be used. This is particularly true for ground fault protection.

Copyright National Electrical Manufacturers Association
Provided by IHS under license with NEMA
No reproduction or networking permitted without license from IHS
Not for Resale

3. It provides for and simplifies key interlocking between the primary switch and secondary switchgear where interlocking is used.

4. It provides flexibility. Note that a secondary main switching and protective device is essential for several of the circuit arrangements shown in Fig. 1 through Fig. 8 (Pages 3 to 6, inclusive). A radial-type unit substation which includes a main switching and protective device can later be expanded into one of the more elaborate circuit arrangements without extensive field modifications.

Authorized Engineering Information 9-9-1970.

210-8.5 REFERENCE DOCUMENTS

Additional application data is contained in the following documents:

IEEE 141	Electric Power Distribution for Industrial Plants
IEEE 241	Electric Systems for Commercial Buildings
ANSI C37.010-1964	Application Guide for AC High - Voltage Circuit Breakers
ANSI C37.16-1963	Preferred Ratings and Related Requirements for Low Voltage Power Circuit Breakers.
ANSI C37.20-1969	Switchgear Assemblies Including Metal - Enclosed Bus.

Authorized Engineering Information 9-9-1970.

Copyright National Electrical Manufacturers Association
Provided by IHS under license with NEMA
No reproduction or networking permitted without license from IHS
Not for Resale

NEMA STANDARDIZATION

The purpose of NEMA Standards, their classification and status are set forth in certain clauses of the NEMA Bylaws, which are quoted below:

Purpose of Standards

National Electrical Manufacturers Association Standards are adopted in the public interest and are designed to eliminate misunderstandings between the manufacturer and the purchaser and to assist the purchaser in selecting and obtaining the proper product for its particular need. Existence of a National Electrical Manufacturers Association Standard does not in any respect preclude any member or nonmember from manufacturing or selling products not conforming to the standard.

(Bylaw—Art. V, Sec. 1)

Definition of a Standard

A standard of the National Electrical Manufacturers Association defines a product, process or procedure with reference to one or more of the following: nomenclature, composition, construction, dimensions, tolerances, safety, operating characteristics, performance, rating, testing, and the service for which they are designed.

(Bylaw—Art. V, Sec. 2, Subsection A)

Dimensions

Where dimensions are given for interchangeability purposes, alternate dimensions satisfying the other provisions of the standards publication may be capable of otherwise equivalent performance.

(NEMA Policy Memorandum 84-2, dated June 7, 1984)

Classes of Standards

National Electrical Manufacturers Association Standards are of two classes:

1. NEMA Standard, which relates to a product commercially standardized and subject to repetitive manufacture, which standard has been approved by at least 90 percent of the members of the Subdivision eligible to vote thereon;
2. Suggested Standard for Future Design, which may not have been regularly applied to a commercial product, but which suggests a sound engineering approach to future development, which standard has been approved by at least two-thirds of the members of the Subdivision eligible to vote thereon.

(Bylaw—Art. V, Sec. 2, Subsection B)

Authorized Engineering Information

Authorized Engineering Information consists of explanatory data and other engineering information of an informative character not falling within the classification of NEMA Standard or Suggested Standard for Future Design.

(Bylaw—Art. V, Sec. 6, 1st Sentence)

Official Standards Proposal

An Official Standards Proposal is an official draft of a proposed standard which is formally recommended to an outside organization(s) for consideration, comment and/or approval.

(Bylaw—Art. V, Sec. 4, Subsection A)

Identification of Status

Standards in NEMA Standards Publications are identified in the foreword or following each standard as "NEMA Standard" or "Suggested Standard for Future Design." These indicate the status of the standard. These words are followed by a date which indicates when the standard was adopted in its present form by the Association.

The material identified as "Authorized Engineering Information" and "Official Standards Proposal" is designated similarly.

Copyright National Electrical Manufacturers Association
Provided by IHS under license with NEMA
No reproduction or networking permitted without license from IHS
Not for Resale
PROBLEM HARD COPY

MEMBER COMPANIES OF THE NATIONAL ELECTRICAL MANUFACTURERS ASSOCIATION

Allis-Chalmers Manufacturing Co. * †
Milwaukee, Wis. 53201

Chance, A. B., Co. †
Transformer Division
Washington, Mo. 63090

Central Transformer Corp. †
Pine Bluff, Ark. 71601

Continental Division *
Arrow-Hart, Inc.
Florence, Ky. 41042

Control Power Systems, Inc. *
Manchester, N. H. 03102

Dowzer Electric Inc. †
Mount Vernon, Ill. 62864

Electric Machinery Manufacturing Co. *
Minneapolis, Minn. 55413

Esco Manufacturing Co. * †
Greenville, Tex. 75401

Federal Pacific Electric Co., * †
Newark, N. J. 07101

General Electric Co.
Philadelphia, Pa. 19142 *
Pittsfield, Mass. 01201 †

Hevi-Duty Electric Division of †
Sola Basic Industries
Goldsboro, N. C. 27530

High Voltage Power Corp. †
Westboro, Mass. 01581

I-T-E Imperial Corp. * †
Philadelphia, Pa. 19130

Kearney Division *
Kearney National, Inc.
Atlanta, Ga. 30329

Kuhlman Electric Co., A Division of †
Kuhlman Corp.
Birmingham, Mich. 48012

Magnatran Inc. †
Kearney, N. J. 07032

Magnetics Inc. †
Sandy Lake, Pa. 16145

McGraw-Edison Power Systems Division * †
Canonsburg, Pa. 15317

Moloney Electric Co. †
St. Louis, Mo. 63166

Nelson Electric Division *
Sola Basic Industries
Tulsa, Okla. 74101

Niagara Transformer Corp. †
Buffalo, N. Y. 14225

Pacific Transformer Co. †
Redwood City, Calif. 94063

Pringle Electrical Manufacturing Co., The *
Fort Washington, Pa. 19034

S & C Electric Co. *
Chicago, Ill. 60626

Sierra Transformer Co. †
Cerritos, Calif. 90701

Sorgel Electric Corp. †
Milwaukee, Wis. 53204

Spokane Transformer Co. †
Spokane, Wash. 99202

Square D Co. *
Park Ridge, Ill. 60068

Standard Transformer Co., The, Division of †
American Gage and Machine Co.
Warren, Ohio 44481

Tierney Electrical Manufacturing Co. †
Seattle, Wash. 98108

Uptegraff, R. E., Manufacturing Co. †
Scottdale, Pa. 15683

Utility Transformer and Equipment Co. †
Baraboo, Wis. 53913

Wagner Electric Corp. †
St. Louis, Mo. 63133

Westinghouse Electric Corp.
East Pittsburgh, Pa. 15112 *
Sharon, Pa. 16146 †

* Member of Power Switchgear Assemblies Voting Classification of the Switchgear Section
† Member of Transformer Section

Printed in U. S. A.

Copyright National Electrical Manufacturers Association
Provided by IHS under license with NEMA
No reproduction or networking permitted without license from IHS
Not for Resale
PROBLEM HARD COPY