9009279 0000015 23T

A-31-15

NATIONAL ELECTRICAL MANUFACTURERS ASSOCIATION

155 East 44th Street New York, N. Y. 10017

Proposed, New and Revised Standards

July 21, 1976

TO ALL REPRESENTATIVES OF MEMBER COMPANIES IN THE:
SWITCHGEAR SECTION
TRANSFORMER SECTION

Subject: Reaffirmation of NEMA Publications No. 201-1970 and 210-1970

Gentlemen:

At its meeting on July 14, 1976, the Codes and Standards Committee approved the reaffirmation of the following NEMA Standards Publications:

201-1970 Primary Unit Substations

210-1970 Secondary Unit Substations

Please note this on your copies of these two books.

Very truly yours,

Virginia Morgan

Virginia Morgan
Standards Publications Editor

VM:lg

Copies to: Technical Committees of All Switchgear Section Groups

Technical Committee of the Transformer Section

Copyright National Electrical Manufacturers Association
Provided by IHS under license with NEMA
No reproduction or networking permitted without license from IHS
Not for Resale

A-31-15

201-70 6470247 0000019 0

PUB. NO. 201-1970

REAPPROVED 82

STANDARDS PUBLICATION

PRIMARY UNIT SUBSTATIONS

NATIONAL ELECTRICAL MANUFACTURERS ASSOCIATION 155 EAST 44TH STREET, NEW YORK, N. Y. 10017

Copyright National Electrical Manufacturers Association
Provided by IHS under license with NEMA
No reproduction or networking permitted without license from IHS

Not for Resale

TABLE OF CONTENTS

		Page
Part 1,	SCOPE	1
Part 2,	REFERENCE STANDARDS	
	Transformers	1
	Switchgear	1
Part 3,	DEFINITIONS	
	Unit Substation	2
	Primary Unit Substation	2
	Secondary Unit Substation	2
	Articulated Primary Unit Substation	2
	Oil	3
	Askarel	3
Part 4,	GENERAL REQUIREMENTS	
	Ratings—Transformer Section	7
	Ratings—Incoming and Outgoing Sections	7
	Tests	8
	Arrangements	8
	Equipment Grounding	8
	Secondary and Control Wiring	8
	Nameplates	8
Part 5,	INCOMING SECTION EQUIPMENT	
	Equipment	12
Part 6,	TRANSFORMER SECTION EQUIPMENT	
	General	15
	Bushings	15
Part 7,	OUTGOING SECTION EQUIPMENT	
	Metal-clad Switchgear	16
	Air Interrupter Switches (Fused or Unfused)	16
	Motor Control Centers	16
Part 8,	APPLICATION GUIDE	
	General	17
	Incoming Section	17
	Transformer Section	18
	Outgoing Section	19
	Reference Documents	20

Copyright National Electrical Manufacturers Association
Provided by IHS under license with NEMA
No reproduction or networking permitted without license from IHS
Not for Resale

PRIMARY UNIT SUBSTATIONS

Part 1
SCOPE

This Standards Publication applies to three-phase primary unit substations as defined in 201-3.1. For secondary unit substations, see NEMA Publication No. 210-1970.

These standards are periodically reviewed by the Power Switchgear Assemblies Voting Classification of the Switchgear Section and by the Transformer Section of NEMA for any revisions necessary to keep them up to date with advancing technology. Proposed or recommended revisions should be submitted to:

The Manager
Engineering and Safety Regulations Department
National Electrical Manufacturers Association
155 East 44th Street
New York, New York 10017

Part 2
REFERENCE STANDARDS

201-2.1 TRANSFORMERS

The transformer shall meet the requirements for oil and askarel transformers as contained in the latest revision of the following American National Standards*, except as otherwise indicated in this publication:

C57.12.00-1968	General Requirements for Distribution, Power and Regulating Transformers and Shunt Reactors
C57.12.10-1969	Transformers, 138 000 Volts and Below. 501 through 10 000/13 333/16 667 kVA, Single-Phase 501 through 30 000/40 000/50 000 kVA, Three-Phase
C57.12.30-1965	Three-Phase Load-Tap-Changing Transformers 67 000 Volts and Below, 1000 kVA through 10 000 kVA
C57.12.70-1964	Terminal Markings and Connections for Distribution and Power Transformers
C57.12.75-1964	Removable Air-Filled Junction Boxes for Cable Termination for Power Transformers
C57.12.76-1964	Integral Air-Filled Junction Boxes for Cable Termination for Power Transformers
C57.12.80-1958) C57.12.80a-1961)	Terminology
C57.12.90-1968	Test Code for Distribution, Power, and Regulating Transformers

NEMA Standard 9-9-1970.

201-2.2 SWITCHGEAR

The switchgear shall meet the requirements of the American National Standard Switchgear Assemblies, Including Metal-Enclosed Bus, C37.20-1969, or latest revision thereof, except as otherwise indicated in this publication.

NEMA Standard 9-9-1970.

* Copies are available from the American National Standards Institute, 1430 Broadway, New York, N.Y. 10018.

Copyright National Electrical Manufacturers Association
Provided by IHS under license with NEMA
No reproduction or networking permitted without license from IHS
Not for Resale

Part 3
DEFINITIONS

201-3.1 UNIT SUBSTATION

A substation consisting primarily of one or more transformers which are mechanically and electrically connected to and coordinated in design with one or more switchgear or motor control assemblies, or combinations thereof.

NEMA Standard 9-9-1970.

201-3.2 PRIMARY UNIT SUBSTATION

A substation in which the low-voltage section is rated 1000 volts and above.

NEMA Standard 9-9-1970.

201-3.3 SECONDARY UNIT SUBSTATION

A substation in which the low-voltage section is rated below 1000 volts.

NEMA Standard 9-9-1970.

201-3.4 ARTICULATED PRIMARY UNIT SUBSTATION

One which consists of:

1. An incoming section which provides for the connection of one or more incoming high-voltage circuits, each of which may or may not be provided with a switching device or a switching and interrupting device.

2. A transformer section which includes one or more transformers with or without automatic load-tap-changing equipment.

3. An outgoing section which provides for the connection of one or more outgoing feeders, each of which is provided with a switching and interrupting device.

These sections are normally subassemblies intended for connection in the field. Articulated primary unit substations are usually of one of the following types:

A. Radial Type

One which has a single stepdown transformer and which has an outgoing section for the connection of one or more outgoing radial (stub end) feeders. See Fig. 1, Page 3.

B. Distributed-network Type

One which has a single stepdown transformer having its outgoing side connected to a bus through a circuit breaker equipped with relays which are arranged to trip the circuit breaker on reverse power flow to the transformer and to reclose the circuit breaker upon the restoration of the correct voltage, phase angle and phase sequence at the transformer secondary. The bus has one or more outgoing radial (stub end) feeders and one or more tie connections to a similar unit substation. See Fig. 2, Page 4.

C. Spot-network Type

One which has two stepdown transformers, each connected to an incoming high-voltage circuit. The outgoing side of each transformer is connected to a common bus through circuit breakers equipped with relays which are arranged to trip the circuit breaker on reverse power flow to the transformer and to reclose the circuit breaker upon the restoration of the correct voltage, phase angle and phase sequence at the transformer secondary. The bus has one or more outgoing radial (stub end) feeders. See Fig. 3, Page 4.

D. Secondary-selective Type (Low-voltage-selective Type)

One which has two stepdown transformers, each connected to an incoming high-voltage circuit. The outgoing side of each transformer is connected to a separate bus through a suitable switching and protective device. The two sections of bus are connected by a normally open switching and protective device. Each bus has one or more outgoing radial (stub end) feeders. See Fig. 4, Page 5.

E. Duplex Type (Breaker-and-a-half Scheme)

One which has two stepdown transformers, each connected to an incoming high-voltage circuit. The outgoing side of each transformer is connected to a radial (stub end) feeder. These feeders are joined on the feeder side of the power circuit breakers by a normally-open-tie circuit breaker. See Fig. 5, Page 5.

NEMA Standard 9-9-1970.

Copyright National Electrical Manufacturers Association
Provided by IHS under license with NEMA
No reproduction or networking permitted without license from IHS
Not for Resale

201-3.5 OIL

"Oil" as used in this publication means mineral oil.

NEMA Standard 9-9-1970.

201-3.6 ASKAREL

A synthetic nonflammable insulating liquid which, when decomposed by an electric arc, evolves only nonexplosive gaseous mixtures.

NEMA Standard 9-9-1970.

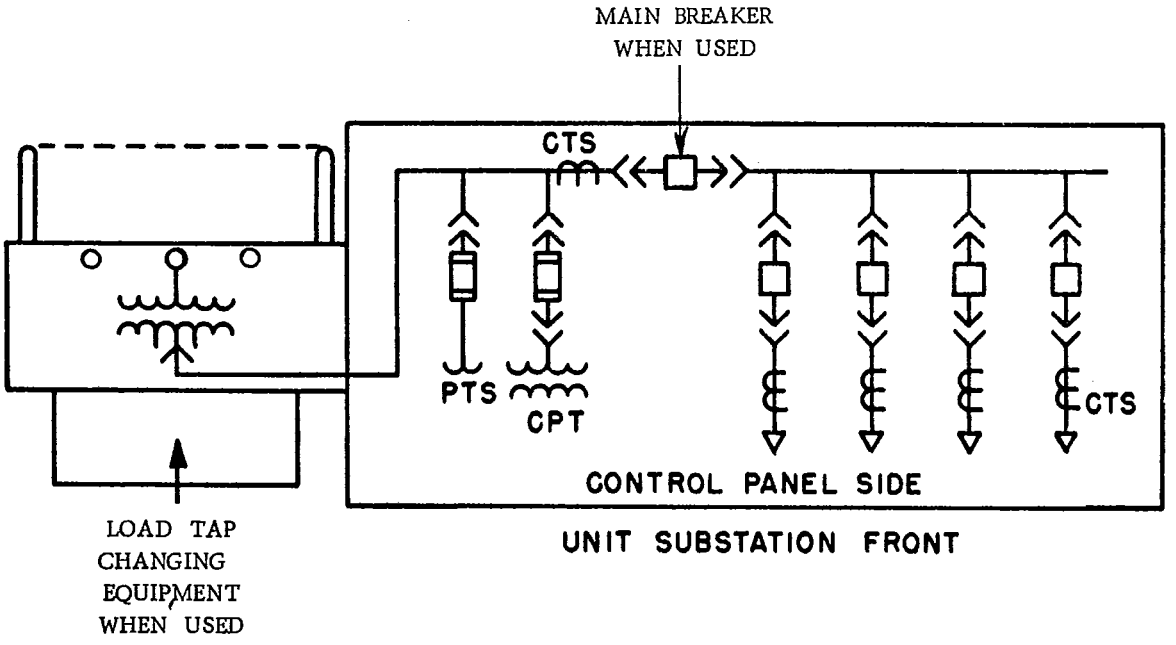

Fig. 1
Typical Radial-type Substation

CTS—Current transformers
PTS—Potential transformers
CPT—Control power transformers

Copyright National Electrical Manufacturers Association
Provided by IHS under license with NEMA
No reproduction or networking permitted without license from IHS
Not for Resale

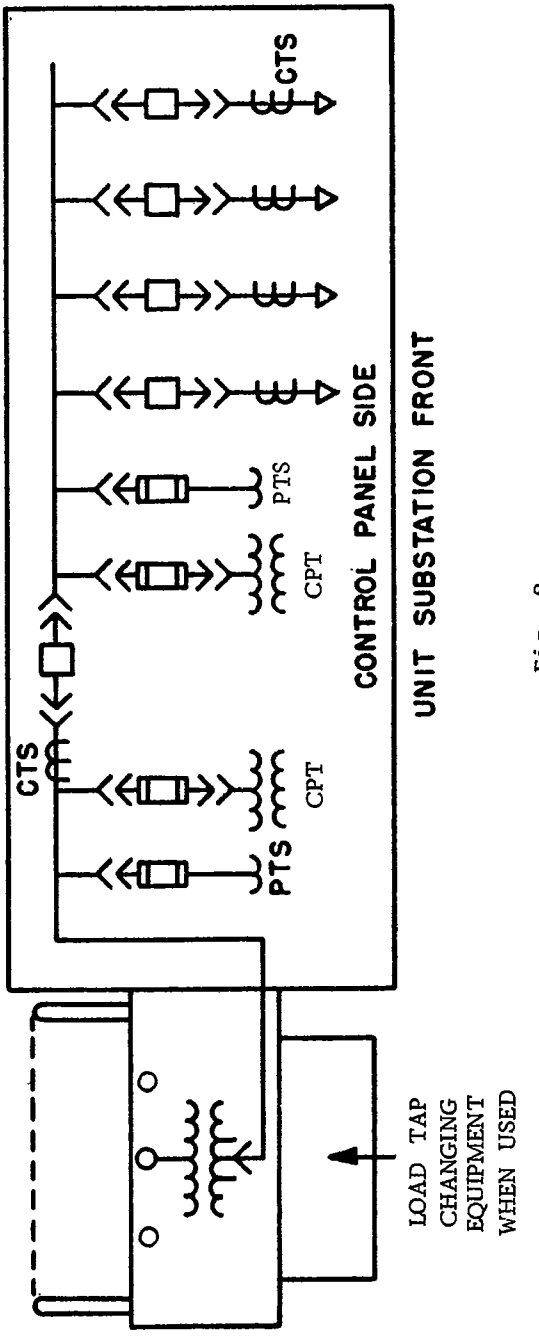

Fig. 2
Typical Distributed-network-type Substation

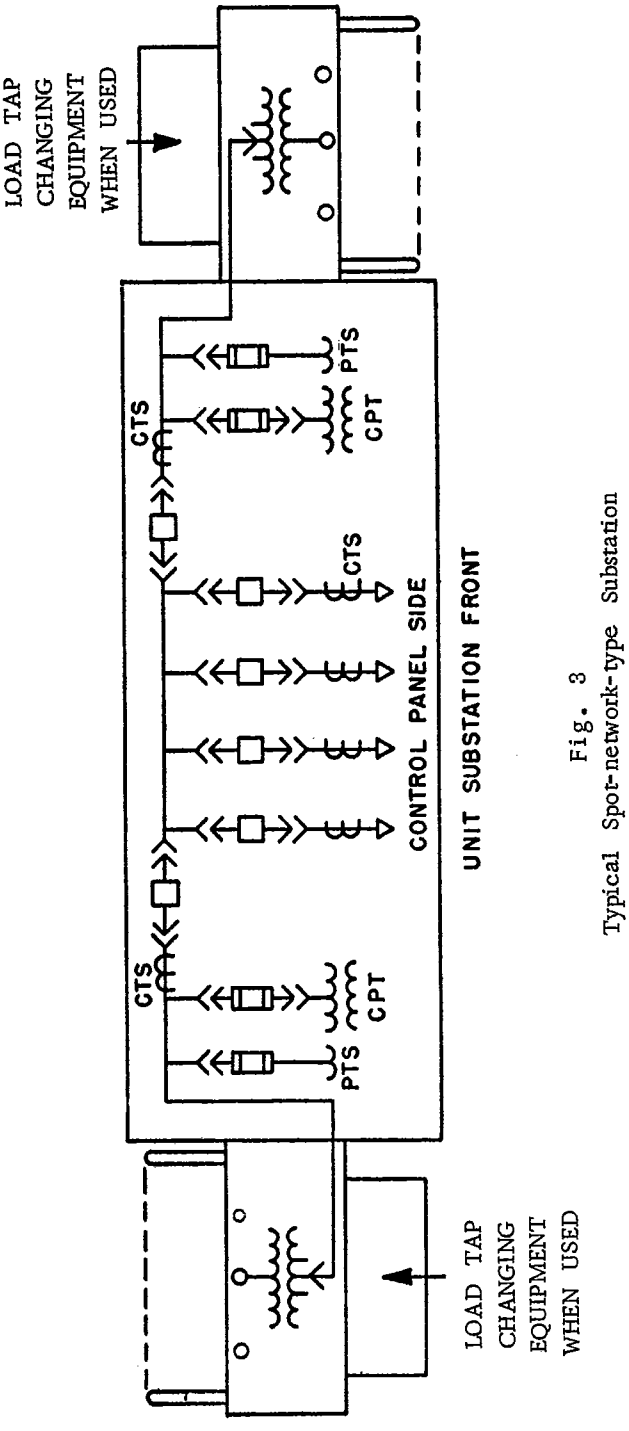

Fig. 3
Typical Spot-network-type Substation

Copyright National Electrical Manufacturers Association
Provided by IHS under license with NEMA
No reproduction or networking permitted without license from IHS
Not for Resale

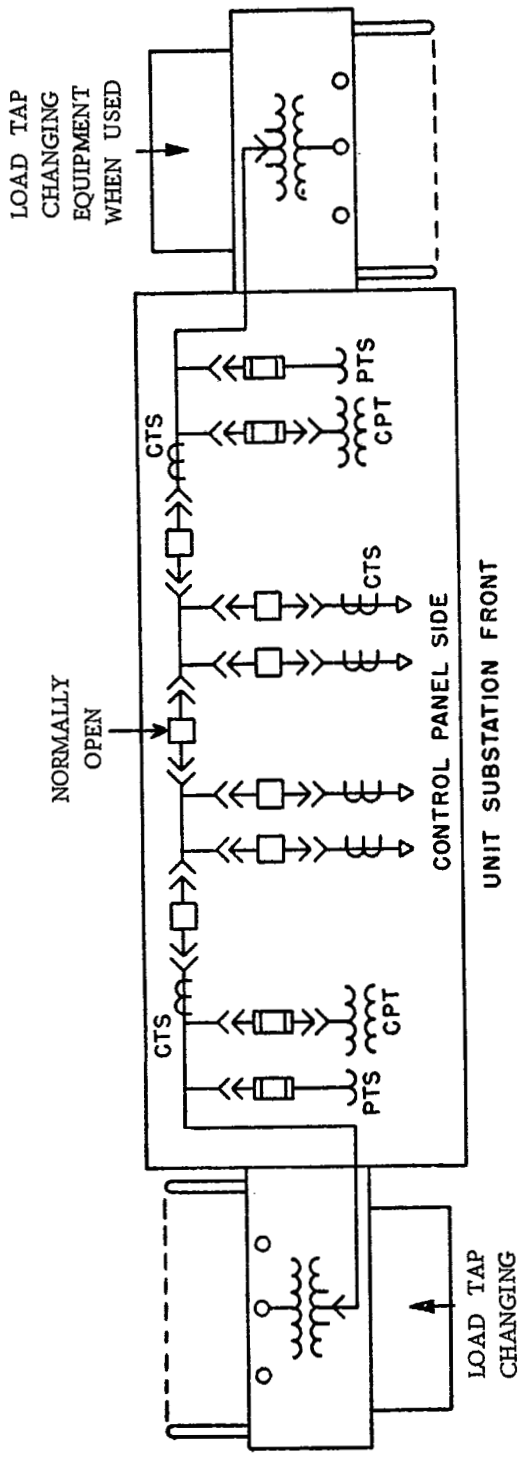

Fig. 4
Typical Secondary-selective-type Substation

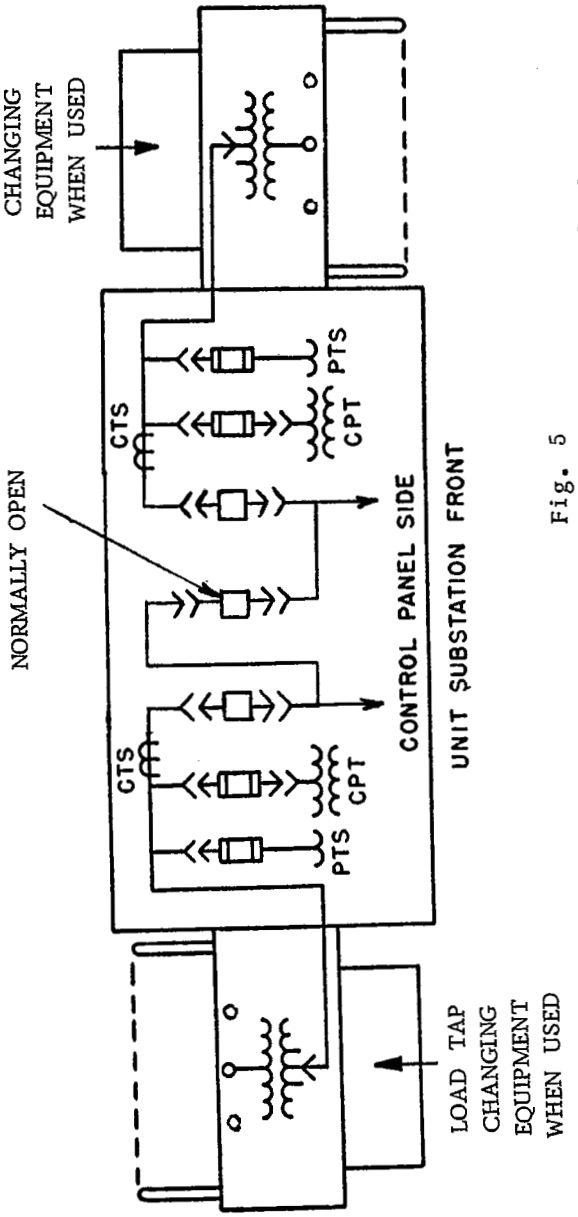

Fig. 5
Typical Duplex-type Substation (Breaker-and-a-half Scheme)

Copyright National Electrical Manufacturers Association
Provided by IHS under license with NEMA
No reproduction or networking permitted without license from IHS

Not for Resale

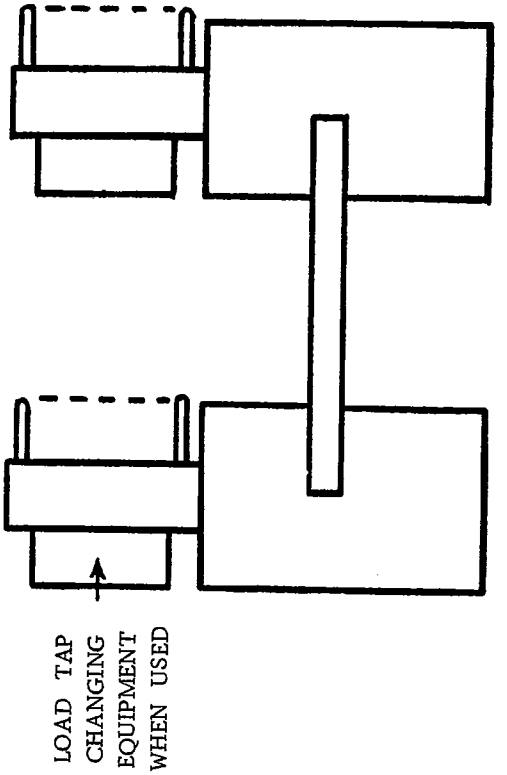

Fig. 7

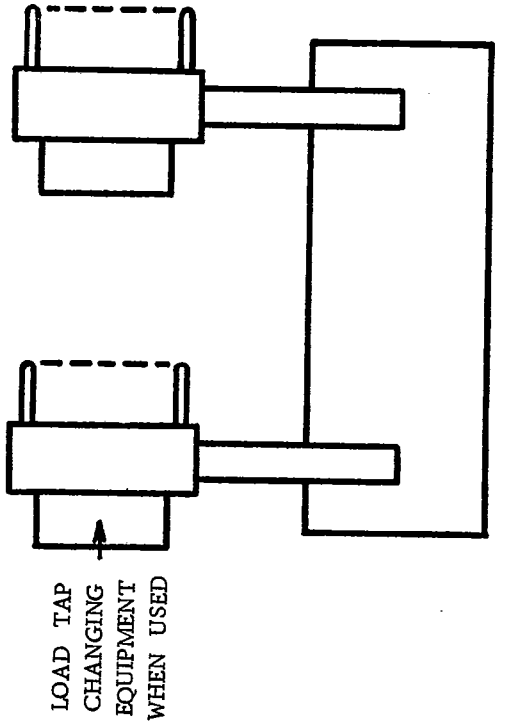

Fig. 6

Alternate Arrangements for Two-transformer Unit Substations

Copyright National Electrical Manufacturers Association
Provided by IHS under license with NEMA
No reproduction or networking permitted without license from IHS

Not for Resale

Part 4
GENERAL REQUIREMENTS

201-4.1 RATINGS— TRANSFORMER SECTION

A. Ratings for Self-cooled (OA) Transformers (See Par. B)

The ratings of the transformer section shall be in accordance with Tables 1, 2, 3 and 4, Pages 8 to 11, inclusive. The kVA ratings are continuous and are based on a maximum average winding temperature rise of 65°C and a maximum hottest-spot temperature rise of 80°C at altitudes of 1000 meters (3300 feet) or less.

B. Additional Ratings for Specific Applications

1. kVA Ratings for Forced-air-cooled Transformers—Forced - air - cooled transformers shall include a sufficient number of automatically-controlled fans to give the kVA ratings shown in Column 2 of Table 1. The kVA ratings are continuous and are based on a maximum average winding temperature rise of 65°C and a maximum hottest spot temperature rise of 80°C at altitudes of 1000 meters (3300 feet) or less.

   Fan motors shall be rated 230 volts, single phase, without centrifugal switch, and shall be individually fused or otherwise thermally protected. If a power supply for 230-volt single-phase motors is not available, provision shall be made to accommodate another single-phase motor supply voltage not exceeding 600 volts from the American National Standard Voltage Ratings for Electrical Power Systems and Equipment (60 Hz), C84.1-1970.

   The fans shall be controlled by both the top-oil-temperature relay and by a manually-operated switch connected in parallel with the relay.

2. High-voltage Ratings—When specified, high-voltage ratings other than those shown in Column 1 of Table 3 may be selected from the range of alternate line-to-line high-voltage ratings shown in Column 7 of Table 3.

   The rated voltage shall be the midtap voltage, and all performance characteristics shall be based on the rated voltage.

   Four rated kVA equally-spaced voltage taps, two above rated voltage and two below rated voltage, shall be provided for the voltages selected from Column 7 of Table 3. The total tap voltage range shall not exceed 10 percent or the total percent tap voltage range of the transformer of the same voltage class, whichever is greater. The percent tap range shall be calculated as follows:

   $$\text{Percent Tap Range} = \frac{\left(\begin{matrix}\text{Maximum}\\ \text{Tap Voltage}\end{matrix}\right) - \left(\begin{matrix}\text{Minimum}\\ \text{Tap Voltage}\end{matrix}\right)}{\text{Maximum Tap Voltage}} \times 100$$

3. Y-connected High-voltage Windings—If specified, and if the low-voltage winding is permanently delta connected, a Y-connected high-voltage winding may be provided for three-phase transformers:

   a. Having a high-voltage rating of 12 000 volts or higher in accordance with Column 1 of Table 3.

   b. In the range of high-voltage ratings 11 000 volts or higher in accordance with Column 7 of Table 3.

NEMA Standard 9-9-1970.

201-4.2 RATINGS—INCOMING AND OUTGOING SECTIONS

The ratings of circuit breakers and other devices in the incoming and outgoing sections shall be selected from those shown in the American National Standards for those devices. When the transformer is self-cooled only or is self-cooled with inherent provisions for future forced air cooling, the ratings of the incoming and outgoing circuit devices and conductors shall be based on the self-cooled rating of the transformer unless otherwise specified. When the transformer is forced air cooled, the ratings of the incoming and outgoing circuit devices and conductors shall be based on the forced-air-cooled rating of the transformer. In either case, consideration shall be given to the overload capabilities of the transformer (see 201-8.4, par. B).

NEMA Standard 9-9-1970.

Copyright National Electrical Manufacturers Association
Provided by IHS under license with NEMA
No reproduction or networking permitted without license from IHS
Not for Resale

201-4.3 TESTS

The incoming section, transformer section and outgoing section shall be tested in accordance with the American National Standards listed in 201-2.1 and 201-2.2.

NEMA Standard 9-9-1970.

201-4.4 ARRANGEMENTS

Typical arrangements of articulated primary unit substations are shown in Fig. 1 through Fig. 7 (Pages 3 to 6, inclusive). These figures indicate the orientation of equipment only and do not show construction details or number of components.

Authorized Engineering Information 9-9-1970.

201-4.5 EQUIPMENT GROUNDING

Provisions shall be made for the connection of each section of the unit substation to a station ground.

NEMA Standard 9-9-1970.

201-4.6 SECONDARY AND CONTROL WIRING

Where sections of unit substations are to be close coupled, the necessary secondary and control wiring shall be provided in metal enclosures or conduits. Where transformers are at a location remote from the switchgear, terminal blocks shall be provided for the user's external interconnections.

NEMA Standard 9-9-1970.

201-4.7 NAMEPLATES

Each incoming, transformer and outgoing section shall have a nameplate in accordance with the American National Standards listed in 201-2.1 and 201-2.2.

NEMA Standard 9-9-1970.

Table 1
Self-cooled (OA) and Future Forced-air-cooled (FA) kVA Ratings

OA Ratings, kVA (1)	Future FA Ratings, kVA* (2)
1000	1150
1500	1725
2000	2300
2500	3125
3750	4687
5000	6250
7500	9375
10 000	12 500

* To obtain these ratings, self-cooled transformers shall have provision for the future addition of fan cooling equipment.

Copyright National Electrical Manufacturers Association
Provided by IHS under license with NEMA
No reproduction or networking permitted without license from IHS
Not for Resale

Table 2
Range of OA Ratings in kVA and High- and Low-voltage Ratings

High-voltage Ratings, Volts	Low-voltage Ratings, Volts		
		4800	
		5040	
		6900	
		7200	
		7560	
		8320Y/4800	
	2400	8720Y/5040	
	2400Y/1385	12470Y/7200	12 000
	2520	13090Y/7560	12 600
	4160Y/2400	13200Y/7260	13200
	4360Y/2520	13800Y/7970	14400
6900	1000-3750	....	.....
7200	1000-3750	....	.....
12 000	1000-7500	....	.....
13200	1000-7500	....	.....
13800	1000-7500	....	.....
22900	1000-7500	1000-10 000	.....
34400	1000-7500	1000-10 000	1000-10 000
43800 *	1500-7500	1500-10 000	1500-10 000
67 000 *	1500-7500	1500-10 000	1500-10 000
115 000 *	5000-7500	5000-10 000	5000-10 000
138 000 *	5000-7500	5000-10 000	5000-10 000

* For oil-immersed transformers only.

NOTE I—All connections are delta unless otherwise indicated.

NOTE II—The hyphen separating the kVA ratings indicates that all of the intervening kVA ratings shown in Table 1 are included.

Copyright National Electrical Manufacturers Association
Provided by IHS under license with NEMA
No reproduction or networking permitted without license from IHS
Not for Resale

Copyright National Electrical Manufacturers Association
Provided by IHS under license with NEMA
No reproduction or networking permitted without license from IHS
Not for Resale

Table 3
High-voltage Ratings—Taps, Insulation Characteristics, Impedance Voltages and Other High-voltage Ratings

High-voltage Ratings, Volts	Insulation Class, kV	Basic Impulse Insulation Level, kV	High-voltage Taps, Volts at Rated kVA	Percent Impedance Voltage		Range of Alternate High-voltage Ratings (Line-to-line), Volts
				With Load Tap Changing	Without Load Tap Changing	
(1)	(2) *	(3)	(4)	(5)	(6)	(7) †
6900	8.7A	75	7245/7070/6730/6555	6.0	5.5	6600-8750
7200	8.7A	75	7560/7380/7020/6840	6.0	5.5	6600-8750
12 000	15.0A	95	12 600/12 300/11 700/11 400	6.0	5.5	11 000-14 750
13 200	15.0A	95	13 860/13 530/12 870/12 540	6.0	5.5	11 000-14 750
13 800	15.0A	95	14 400/14 100/13 500/13 200	6.0	5.5	11 000-14 750
22 900	25.0	150	24 100/23 500/22 300/21 700	6.0	5.5	16 400-24 600
34 400	34.5	200	36 200/35 300/33 500/32 600	6.5	6.0	25 700-36 200
43 800	46.0	250	46 200/45 000/42 600/41 400	7.0	6.5	37 800-46 000
67 000	69.0	350	70 600/68 800/65 200/63 400	7.5	7.0	56 700-69 000
115 000	92.0	450	120 750/117 875/112 125/109 250	8.0	7.5	110 000-121 000
138 000	115.0	550	144 900/141 450/134 550/131 000	8.5	8.0	132 000-145 000

* The letter "A" refers specifically to distribution levels for distribution apparatus.

† The hyphen separating voltage ratings indicates that all intervening voltages are included.

NOTE—All connections are delta.

6470247 0000030 0

Table 4
Low-voltage Ratings—Insulation Characteristics

Low-voltage Ratings, Volts	Insulation Class, kV*	Basic Impulse Insulation Level, kV
2400, 2400Y/1385, 2520	2.5A	45
4160Y/2400 4360Y/2520 4800 5040	5.0A	60
6900 7200 7560 8320Y/4800 8720Y/5040	8.7A	75
12 000 12 600 13 200 14 400 12 470Y/7200 13 090Y/7560 13 200Y/7620 13 800Y/7970	15.0A	95

* The letter "A" refers specifically to distribution levels for distribution apparatus.

NOTE—All connections are delta unless otherwise indicated.

Copyright National Electrical Manufacturers Association
Provided by IHS under license with NEMA
No reproduction or networking permitted without license from IHS
Not for Resale

Part 5
INCOMING SECTION EQUIPMENT

201-5.1 EQUIPMENT

Incoming sections shall consist of one of the following:

A. Primary Cover Bushings

Cover bushings on the primary side of the transformer in the number and ratings required. See Fig. 8.

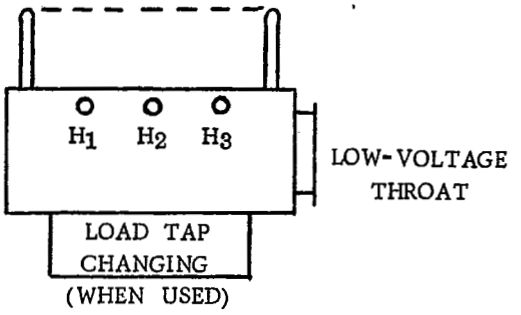

Fig. 8

B. Air- or Liquid-filled Terminal Chamber

Air- and liquid-filled terminal chambers shall be used to provide space for bushings, potheads, stress cones or other terminating means for either single or looped incoming circuits. See Fig. 9.

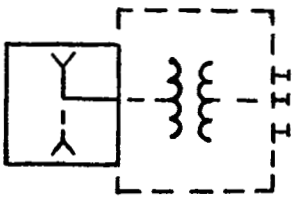

Fig. 9
Air- or Liquid-filled Terminal Chamber

C. Liquid-immersed Interrupter Switches

Oil- or askarel-immersed switches shall be capable of interrupting the no-load magnetizing current of the transformer.

Askarel-immersed switches shall be interlocked with an interrupter(s) on the secondary side of the transformer so that the askarel-immersed switch may be operated only when the transformer secondary is open.

Where load-break oil switches are applied and the transformer load current, including any overload ratings, exceeds the interrupting rating of the switch, locks or interlocks shall be provided.

Where available short-circuit currents exceed the fault-closing rating of liquid-immersed switches, interlocks are recommended to prevent closing of the switch on fault currents. (This sentence has been approved as Authorized Engineering Information.)

Terminating means shall accommodate single, selector or looped circuits as required. Typical arrangements are shown in Fig. 10 and 11.

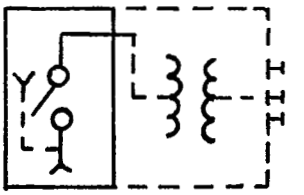

Fig. 10
Single Circuit

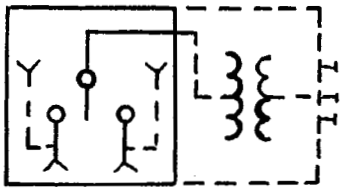

Fig. 11
Selector Circuit

D. Air Interrupter Switches (Fused or Unfused)

Fused and unfused air interrupter switches shall meet the requirements of the following American National Standards:

C37.20-1965	Switchgear Assemblies, Including Metal-Enclosed Bus, paragraph 20.6.4
C37.30-1962	Definitions and Requirements for High Voltage Air Switches, Insulators and Bus Supports

Copyright National Electrical Manufacturers Association
Provided by IHS under license with NEMA
No reproduction or networking permitted without license from IHS
Not for Resale

Power fuses shall meet the requirements of the NEMA Standards Publication for High-voltage Fuses, SG 2-1969.

Space shall be provided for bushings, potheads, stress cones or other terminating means for either single or looped incoming circuits.

Where the transformer load current, including any overload ratings, exceeds the interrupting rating of the switch, interlocks shall be provided. The switch shall have the fault closing ability specified in paragraph 20-6.4.8 of American National Standard C37.20-1965, or latest revision thereof.

Typical arrangements are shown in Fig. 12 through Fig. 16.

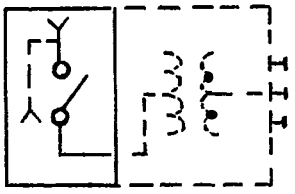

Fig. 12
Two-position Switch
(Unfused)

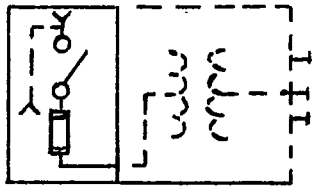

Fig. 13
Two-position Switch
(Fused)

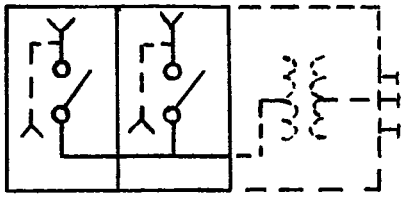

Fig. 14
Dual Switch
(Unfused)

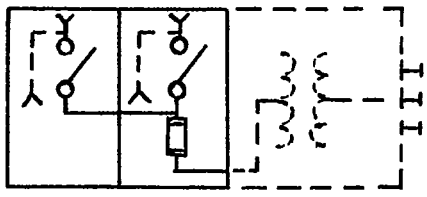

Fig. 15
Dual Switch
(Fused)

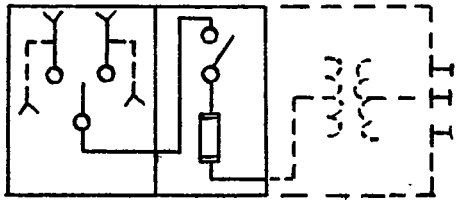

Fig. 16
Selector Switch
(Fused or Unfused)

Copyright National Electrical Manufacturers Association
Provided by IHS under license with NEMA
No reproduction or networking permitted without license from IHS

Not for Resale

E. Metal-clad Switchgear

Metal-clad switchgear shall meet the requirements for such switchgear as given in the American National Standard C37.20. Power circuit breakers shall meet the requirements of American National Standards C37.03 through C37.011.

Space shall be provided for bushings, potheads, stress cones or other terminating means for either single or looped incoming circuits.

Typical arrangements are shown in Fig. 17 through Fig. 20.

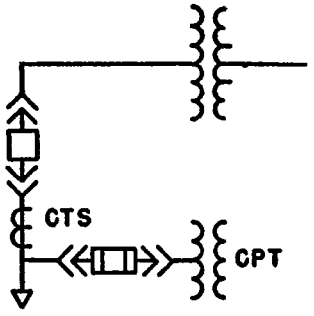

Fig. 17
One Incoming Line

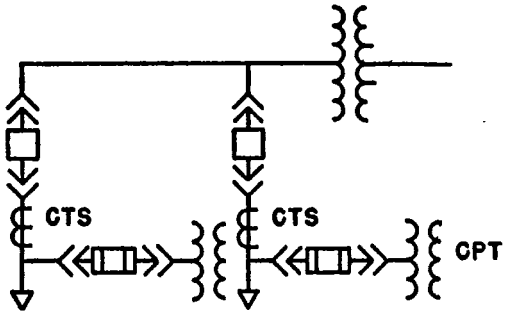

Fig. 18
Two Incoming Lines

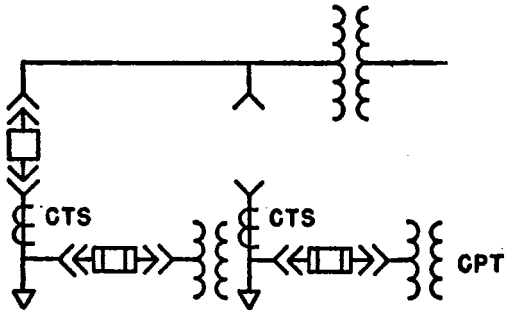

Fig. 19
Two Incoming Lines,
Selector Function

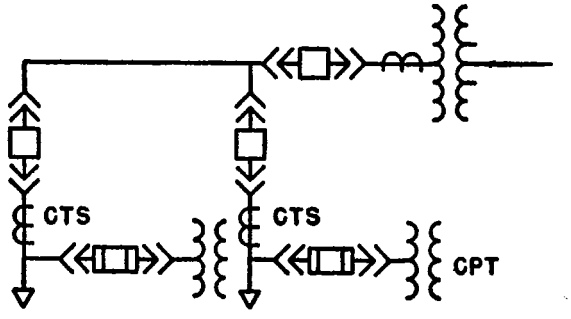

Fig. 20
One Incoming Line,
Looped

NEMA Standard 9-9-1970.

Copyright National Electrical Manufacturers Association
Provided by IHS under license with NEMA
No reproduction or networking permitted without license from IHS
Not for Resale

Part 6
TRANSFORMER SECTION EQUIPMENT

201-6.1 GENERAL

Transformers shall be oil or askarel immersed. Transformers are available both with and without load - tap - changing equipment. When askarel-immersed transformers are supplied with load-tap-changing equipment, the load-tap-changing equipment shall be located in an oil-filled compartment.

NEMA Standard 9-9-1970.

201-6.2 BUSHINGS

The insulation class of the line bushings shall be equal to or greater than the insulation class of the windings to which they are connected.

A neutral bushing shall be provided on units having a wye-connected winding.

When cover bushings are used, they shall meet the requirements of American National Standard Outdoor Apparatus Bushings, C76.1. When sidewall bushings are used, they shall be fully coordinated with the winding and the external equipment to which they are connected.

NEMA Standard 9-9-1970.

Copyright National Electrical Manufacturers Association
Provided by IHS under license with NEMA
No reproduction or networking permitted without license from IHS
Not for Resale

Part 7
OUTGOING SECTION EQUIPMENT

201-7.1 METAL-CLAD SWITCHGEAR

Metal-clad switchgear shall meet the requirements of 201-5.1, par. E.

NEMA Standard 9-9-1970.

201-7.2 AIR INTERRUPTER SWITCHES (FUSED OR UNFUSED)

Air interrupter switches shall meet the requirements of 201-5.1, par. D.

NEMA Standard 9-9-1970.

201-7.3 MOTOR CONTROL CENTERS

Motor control centers up to 5 kV shall meet the requirements of Part ICS 2-322 of the NEMA Standards Publication for Industrial Controls and Systems, ICS-1970, or latest revision thereof.

NEMA Standard 9-9-1970.

Copyright National Electrical Manufacturers Association
Provided by IHS under license with NEMA
No reproduction or networking permitted without license from IHS

Not for Resale

Part 8
APPLICATION GUIDE

201-8.1 GENERAL

A. Short-circuit Calculations

Methods for calculating system short-circuit currents are given in the American National Standard Application Guide for AC High-Voltage Circuit Breakers, C37.010-1964, Clause 010-5.3. For most applications, the "E/X Simplified Method" covered in Clause 010-5.3.1 will be found to be satisfactory.

B. Solar Radiation

See the IEEE Guide for Evaluating the Effect of Solar Radiation on Outdoor Metal-Clad Switchgear *, Publication No. 144, for evaluating the effects of solar radiation on outdoor switchgear and for suggested modifications or deratings.

* Copies are available from the Institute of Electrical and Electronics Engineers, 345 East 47th Street, New York, N.Y. 10017.

Authorized Engineering Information 9-9-1970.

201-8.2 INCOMING SECTION

In unit substation applications, it is desirable to be able to isolate the transformer from the incoming circuit. An exception occurs when the unit substation transformer is the only load on the incoming circuit, in which case the switching device at the source of the circuit may serve to isolate the transformer.

A. High-voltage Power Circuit Breakers

High-voltage power circuit breakers with relays provide a high level of system protection and selectivity. In cases of outages, service can be restored quickly.

B. Air Interrupter Switches

Air interrupter switches are usually equipped with fuses to provide protection for the transformer. In those applications where transformer protection is provided at the source of the circuit, the interrupter switch may be unfused. For additional information, see the American National Standard C37.20-1965. Paragraphs 20-6.4.7 and 20-6.4.8.

C. Power Fuses for Interrupter Switchgear

Fuses must be selected to carry, without damage, the transformer magnetizing inrush current and to clear a secondary short circuit in less time than the transformer is designed to withstand the short-circuit current given in American National Standard C57.12.00-1968. Clauses 10.3 and 10.4 in C57.12.00 give the mechanical limits and thermal limits, respectively, of transformers under short-circuit conditions.

Primary fuses usually cannot be applied to protect a transformer from thermal overloads. For complete protection of the transformer, a power circuit breaker should be provided for the transformer secondary. The primary fuses and the relays for the secondary circuit breaker should be selected so as to provide coordination over as wide a range of short-circuit currents as possible. It may be impossible to provide selectivity at all levels of available short-circuit currents, particularly those approaching the maximum level.

D. Other Switching Devices

Liquid-immersed switches or oil cutouts may be applied within their ratings. The precautions associated with the use of oil-filled equipment should be observed as indicated for oil-immersed transformers in 201-8.3, par. C.

E. Interlocks

Switching devices that have the ability to open or close only transformer magnetizing current should be interlocked with an interrupting device on the secondary side of the transformer to prevent operation of the switch until the interrupting device is open.

Distribution oil cutouts or interrupter switches are normally used on transformers having a full-load current which is less than the interrupting rating of the switch. The switch can be operated safely only if current in excess of the interrupting current rating of the switch is not flowing at the time the switch is opened.

Currents in excess of the transformer full-load current may be caused by such things as temporary or prolonged overloads, transformer inrush currents, motor starting inrush or accelerating currents, circulating currents due to high- or low-voltage tie

Copyright National Electrical Manufacturers Association
Provided by IHS under license with NEMA
No reproduction or networking permitted without license from IHS
Not for Resale
PROBLEM HARD COPY

circuits and faults. The most positive method of protecting equipment and operators from the serious damage and injury which can result if a switching device is opened or closed under these conditions is to interlock the switching device with the secondary interrupting device by means of a key interlock to assure that all load is removed from the transformer before the switching devices are operated.

Where the installation includes more than one incoming circuit, interlocks may be provided to prevent parallel operation of the incoming circuits.

Authorized Engineering Information 9-9-1970.

201-8.3 TRANSFORMER SECTION

A. kVA Rating

The kVA rating of the transformer section must primarily be sufficient to handle the immediate load required. Consideration should be given to the future load growth which might be required by expanding or changing facilities. When substantial load growth is anticipated, it is usually desirable to install initially a single transformer substation with a main circuit breaker (Fig. 1 on Page 3 or Fig. 2 on Page 4); this can be readily expanded to a two-transformer substation (Fig. 3 on Page 4 or Fig. 4 on Page 5) when the additional capacity is needed.

For the application of demand factors and diversity factors to the total connected load, refer to the IEEE Electric Power Distribution for Industrial Plants, Publication No. 141, and the IEEE Electric Systems for Commercial Buildings, Publication No. 241. Fan cooling may be used to provide higher kVA ratings to meet load growth. For secondary-selective systems or network systems, fan cooling is often used to provide higher ratings during periods when one or more transformers is out of service.

For loading guides, see the NEMA Guide for Loading Oil-immersed Power Transformers With 65°C Average Winding Rise, TR 98-1964.

B. Voltage Rating

The primary voltage rating is usually selected to be equal to the nominal value of the supply voltage with two approximately 2 1/2 percent taps above and below the rated voltage to adjust for variations in supply voltage. Where the voltage variation without load-tap-changing equipment is greater than that suitable for the application, then equipment for automatic tap changing under load should be used.

C. Indoor or Outdoor Location

Askarel-immersed transformers are, in general, suitable for use both indoors and outdoors.

Oil-immersed transformers are normally suitable only for outdoor locations. They may be installed indoors only when located in fireproof vaults and where local codes permit. See the American National Standard National Electrical Code, C1-1968 (Article 450, Sections 450-21 through 450-48; and Articles 500 through 503, Sections 501-2, 502-2 and 503-2), and the American National Standard National Electrical Safety Code, C2, (Rules 110-B, 115, 153 and 172).

D. Ambient Conditions

Ambient conditions, other than temperature and altitude, are not critical in the location of liquid-immersed transformers.

E. Surge Protection

When connected to circuits which are subject to lightning or switching surges, substations should be equipped with surge protection equipment which has been selected to limit voltage surges to values below the surge ratings of the transformers and other equipment. Figure 21 shows a typical application of lightning arresters intended to protect a unit substation transformer.

LIQUID-IMMERSED TRANSFORMER

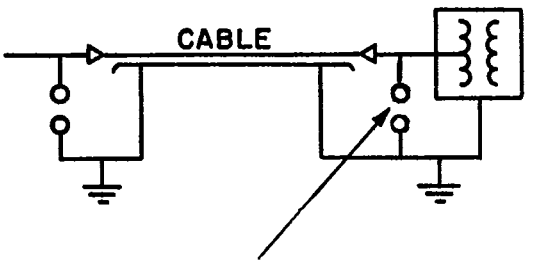

LIGHTNING ARRESTER MAY BE REQUIRED DEPENDING ON LENGTH OF CABLE AND TYPE AND RATING OF ARRESTER USED ON SUPPLY END OF CABLE.

Fig. 21

Copyright National Electrical Manufacturers Association
Provided by IHS under license with NEMA
No reproduction or networking permitted without license from IHS
Not for Resale

F. Fan-cooled Ratings

For double-transformer unit substations, where each transformer may have to supply the total load of the substation during an emergency or during maintenance, the continuous fan-cooled rating of the transformer is often a factor in determining the transformer to be used.

G. Maintenance Requirements

The maintenance for liquid-immersed transformers should include at least periodic checking of the tank for pressure tightness and sample testing of the liquid dielectric strength. The dielectric strength can be restored by filtering. For additional information on maintenance requirements, see the American National Standard Guide for the Installation and Maintenance of Oil-Immersed Transformers, C57.93.

Authorized Engineering Information 9-9-1970.

201-8.4 OUTGOING SECTION

A. Determination of Interrupting Ratings of Switching and Protective Devices

1. Radial-type Substations—For the transformer main secondary switching and protective device, the short-circuit-current contribution of only the stepdown transformer should be used to determine the interrupting rating.

   For the outgoing feeder circuits, the short-circuit-current contribution of the stepdown transformer plus the motor contribution from the secondary bus should be used.

2. Distributed-network-type Substations—To determine the interrupting rating for the transformer main secondary switching and protective device, the short-circuit current should be computed in one of two ways, as follows:

   a. Where the connections from the transformer to the secondary switching and protective device are short and well protected, the possibility of a fault between the transformer and the switching and protective device may be ignored; in this case, the short-circuit current of one stepdown transformer should be used.

   b. Where the possibility of a fault between the transformer and the switching and protective device may not be ignored, the short-circuit-current contribution from all sources connected to the bus, except the transformer, must be computed. This will include the motor contribution from the bus plus the contribution from other sources through the tie circuits. This total contribution must then be compared with the contribution from the transformer, and the larger of the two used to determine the interrupting rating.

   For the outgoing feeder circuit switching and protective devices, the short-circuit-current contribution from the transformer plus the motor contribution from the bus plus the contribution from other sources connected to the bus should be used to determine the interrupting rating.

   For the switching and protective devices in the tie circuits, the short-circuit current as computed for the feeder circuits less the short-circuit-current contribution through the tie circuit being considered should be used to determine the interrupting rating.

3. Spot-network-type Substations— To determine the interrupting rating for the transformer main secondary switching and protective device, the short-circuit current should be computed in one of two ways, as follows:

   a. Where the connections from the transformer to the secondary switching and protective device are short and well protected, the possibility of a fault between the transformer and the switching and protective device may be ignored; in this case, the short-circuit current of one stepdown transformer should be used.

   b. Where the possibility of a fault between the transformer and the switching and protective device may not be ignored, the short-circuit contribution of one stepdown transformer plus the motor contribution from the bus should be used.

Copyright National Electrical Manufacturers Association
Provided by IHS under license with NEMA
No reproduction or networking permitted without license from IHS
Not for Resale

For the outgoing feeder circuits, the short-circuit-current contribution from both stepdown transformers plus the motor contribution from the bus should be used to determine the interrupting rating.

4. Secondary-selective-type Substations—For the transformer main secondary switching and protective device, the short-circuit-current contribution of one stepdown transformer should be used to determine the interrupting rating.

   For the outgoing feeder circuits and the bus tie, the short-circuit-current contribution of one stepdown transformer plus the motor contribution from both of the bus sections should be used.

5. Duplex-type Substations (One-and-one-half-breaker Scheme)—The interrupting ratings are computed in the same manner as those for radial-type substations. See 201-8.4, par. A.1.

B. Continuous Current Rating of Transformer Main Secondary Circuit Breaker and Connections

The transformer main secondary circuit breakers and connections should have a continuous current rating which is approximately 25 percent greater than the continuous current rating of the transformer since transformers often carry short-time loads above their nameplate ratings due to short duty cycles and low ambient temperatures.

When selecting the continuous current rating of the transformer main secondary circuit breakers and connections, consideration should also be given as to whether or not the transformer has, or will have in the future, a continuous forced-air-cooled rating.

C. Transformer Main Secondary Circuit Breaker

A transformer main secondary circuit breaker should be used for the following reasons:

1. In case of an emergency, it is quicker and simpler to de-energize the entire load by tripping a transformer main secondary circuit breaker at each substation than to trip all feeder circuit breakers.

   In case of trouble in the primary cable or transformer, it is often desirable to disconnect the transformer from the low-voltage bus and to supply the bus from an alternate source. The transformer can be disconnected more quickly, safely and conveniently by tripping a main circuit breaker than by unbolting bus work.

2. It provides bus fault protection and back-up protection for the feeder circuit breakers. In addition, where a main secondary circuit breaker is present, it may provide overload protection for the transformer, and less sensitive primary protection may be used.

3. It provides for and simplifies key interlocking between the primary switch and secondary switchgear where interlocking is used.

4. Coordination with primary protective devices is more readily obtainable.

5. It provides flexibility. Note that a secondary main circuit breaker is essential for several of the circuit arrangements shown in Fig. 1 through Fig. 7, (Pages 3 to 6, inclusive). A radial-type unit substation which includes a main circuit breaker can later be expanded into one of the more elaborate circuit arrangements without extensive field modifications.

Authorized Engineering Information 9-9-1970.

201-8.5 REFERENCE DOCUMENTS

Additional application data is contained in the following documents:

IEEE 141	Electric Power Distribution for Industrial Plants
IEEE 241	Electric Systems for Commercial Buildings
ANSI C37.010-1964	Application Guide for AC High-Voltage Circuit Breaker

Authorized Engineering Information 9-9-1970.

Copyright National Electrical Manufacturers Association
Provided by IHS under license with NEMA
No reproduction or networking permitted without license from IHS
Not for Resale

PROBLEM HARD COPY

NEMA STANDARDIZATION

The purpose of NEMA Standards, their classification and status are set forth in certain clauses of the NEMA Bylaws, which are quoted below:

Purpose of Standards

National Electrical Manufacturers Association Standards are adopted in the public interest and are designed to eliminate misunderstandings between the manufacturer and the purchaser and to assist the purchaser in selecting and obtaining the proper product for its particular need. Existence of a National Electrical Manufacturers Association Standard does not in any respect preclude any member or nonmember from manufacturing or selling products not conforming to the standard.

(Bylaw—Art. V, Sec. 1)

Definition of a Standard

A standard of the National Electrical Manufacturers Association defines a product, process or procedure with reference to one or more of the following: nomenclature, composition, construction, dimensions, tolerances, safety, operating characteristics, performance, rating, testing, and the service for which they are designed.

(Bylaw—Art. V, Sec. 2, Subsection A)

Dimensions

Where dimensions are given for interchangeability purposes, alternate dimensions satisfying the other provisions of the standards publication may be capable of otherwise equivalent performance.

(NEMA Policy Memorandum 84-2, dated June 7, 1984)

Classes of Standards

National Electrical Manufacturers Association Standards are of two classes:

1. NEMA Standard, which relates to a product commercially standardized and subject to repetitive manufacture, which standard has been approved by at least 90 percent of the members of the Subdivision eligible to vote thereon;
2. Suggested Standard for Future Design, which may not have been regularly applied to a commercial product, but which suggests a sound engineering approach to future development, which standard has been approved by at least two-thirds of the members of the Subdivision eligible to vote thereon.

(Bylaw—Art. V, Sec. 2, Subsection B)

Authorized Engineering Information

Authorized Engineering Information consists of explanatory data and other engineering information of an informative character not falling within the classification of NEMA Standard or Suggested Standard for Future Design.

(Bylaw—Art. V, Sec. 6, 1st Sentence)

Official Standards Proposal

An Official Standards Proposal is an official draft of a proposed standard which is formally recommended to an outside organization(s) for consideration, comment and/or approval.

(Bylaw—Art. V, Sec. 4, Subsection A)

Identification of Status

Standards in NEMA Standards Publications are identified in the foreword or following each standard as "NEMA Standard" or "Suggested Standard for Future Design." These indicate the status of the standard. These words are followed by a date which indicates when the standard was adopted in its present form by the Association.

The material identified as "Authorized Engineering Information" and "Official Standards Proposal" is designated similarly.

Copyright National Electrical Manufacturers Association
Provided by IHS under license with NEMA
No reproduction or networking permitted without license from IHS
Not for Resale

MEMBER COMPANIES OF THE NATIONAL ELECTRICAL MANUFACTURERS ASSOCIATION

Allis-Chalmers Manufacturing Co. * †
Milwaukee, Wis. 53201

Chance, A. B., Co. †
Transformer Division
Washington, Mo. 63090

Central Transformer Corp. †
Pine Bluff, Ark. 71601

Continental Division *
Arrow-Hart, Inc.
Florence, Ky. 41042

Control Power Systems, Inc. *
Manchester, N. H. 03102

Dowzer Electric Inc. †
Mount Vernon, Ill. 62864

Electric Machinery Manufacturing Co. *
Minneapolis, Minn. 55413

Esco Manufacturing Co. * †
Greenville, Tex. 75401

Federal Pacific Electric Co., * †
Newark, N. J. 07101

General Electric Co.
Philadelphia, Pa. 19142 *
Pittsfield, Mass. 01201 †

Hevi-Duty Electric Division of †
Sola Basic Industries
Goldsboro, N. C. 27530

High Voltage Power Corp. †
Westboro, Mass. 01581

I-T-E Imperial Corp. * †
Philadelphia, Pa. 19130

Kearney Division *
Kearney National, Inc.
Atlanta, Ga. 30329

Kuhlman Electric Co., A Division of †
Kuhlman Corp.
Birmingham, Mich. 48012

Magnatran Inc. †
Kearney, N. J. 07032

Magnetics Inc. †
Sandy Lake, Pa. 16145

McGraw-Edison Power Systems Division * †
Canonsburg, Pa. 15317

Moloney Electric Co. †
St. Louis, Mo. 63166

Nelson Electric Division *
Sola Basic Industries
Tulsa, Okla. 74101

Niagara Transformer Corp. †
Buffalo, N. Y. 14225

Pacific Transformer Co. †
Redwood City, Calif. 94063

Pringle Electrical Manufacturing Co., The *
Fort Washington, Pa. 19034

S & C Electric Co. *
Chicago, Ill. 60626

Sierra Transformer Co. †
Cerritos, Calif. 90701

Sorgel Electric Corp. †
Milwaukee, Wis. 53204

Spokane Transformer Co. †
Spokane, Wash. 99202

Square D Co. *
Park Ridge, Ill. 60068

Standard Transformer Co., The, Division of †
American Gage and Machine Co.
Warren, Ohio 44481

Tierney Electrical Manufacturing Co. †
Seattle, Wash. 98108

Uptegraff, R. E., Manufacturing Co. †
Scottdale, Pa. 15683

Utility Transformer and Equipment Co. †
Baraboo, Wis. 53913

Wagner Electric Corp. †
St. Louis, Mo. 63133

Westinghouse Electric Corp.
East Pittsburgh, Pa. 15112 *
Sharon, Pa. 16146 †

* Member of Power Switchgear Assemblies Voting Classification of the Switchgear Section
† Member of Transformer Section

Printed in U. S. A.

Copyright National Electrical Manufacturers Association
Provided by IHS under license with NEMA
No reproduction or networking permitted without license from IHS
Not for Resale
PROBLEM HARD COPY