9009279 0000001 745

F-15-13

NATIONAL ELECTRICAL MANUFACTURERS ASSOCIATION

2101 L STREET N.W. WASHINGTON, D.C. 20037

Proposed, New and Revised Standards

HVS Page 48
LAS Page 74
SG-II-S Page 29
SG-IV-S Page 27
SG-V-S Page 35
SG-VI-S Page 20
SG-XIII-S Page 27
TRS Page 156

December 1, 1977

TO ALL REPRESENTATIVES OF MEMBER COMPANIES IN THE:
HIGH VOLTAGE INSULATOR SECTION
SURGE ARRESTOR SECTION
SWITCHGEAR SECTION
TRANSFORMER SECTION

Subject: NEMA Standards Publication for *Methods of Measurement of Radio Influence Voltage (RIV) of High-voltage Apparatus,* Publication No. 107-1964 (R 1971)

Gentlemen:

At its meeting on November 11, 1976, the Codes and Standards Committee granted a 1-year extension to the NEMA Standards Publication for *Methods of Measurement of Radio Influence Voltage (RIV) of High-voltage Apparatus,* Publication No. 107-1964 (R 1971). Subsequently at its meeting of November 3, 1977, the Codes and Standards Committee granted an additional 4-year extension to the Standards Publication No. 107-1964 (R 1971). Since the total of the extensions granted on November 11, 1976, and November 3, 1977, equals 5 years, please note your copy of the publication as being reaffirmed in 1976 (i.e., "107-1964 (R 1971, 1976)").

Sincerely yours,

Nels M. Andersen

Nels M. Andersen
Standards Publications Editor

NMA:lvf

Copies to: Technical Committees of the:
High Voltage Insulator Section
Surge Arrestor Section
All Switchgear Section Groups
Transformer Section

Copyright National Electrical Manufacturers Association
Provided by IHS under license with NEMA
No reproduction or networking permitted without license from IHS
Not for Resale

9009279 0000002 681

PUB. NO. 107-1964
REAFFIRMED BY NEMA 1971

NATIONAL ELECTRICAL MANUFACTURERS ASSOCIATION NEMA

STANDARDS PUBLICATION

METHODS OF MEASUREMENT OF RADIO INFLUENCE VOLTAGE (RIV) OF HIGH-VOLTAGE APPARATUS

NATIONAL ELECTRICAL MANUFACTURERS ASSOCIATION 155 EAST 44TH STREET, NEW YORK, N. Y. 10017

Copyright National Electrical Manufacturers Association
Provided by IHS under license with NEMA
No reproduction or networking permitted without license from IHS
Not for Resale

9009279 0000003 518

TABLE OF CONTENTS

Section		Page
1	SCOPE AND PURPOSE	1
2	REFERENCE STANDARD	1
3	DEFINITIONS	
	3.1 General	1
	3.2 Radio Noise	1
	3.3 Test Sample	1
	3.4 Tests	2
4	GENERAL TEST CONDITIONS	
	4.1 Test Area	2
	4.2 Test Sample Setup	2
	4.3 Instrumentation and Measurements	3
	4.4 Acceptable RIV Test Level	3
5	LABORATORY AND FACTORY RIV TESTS—0.015 TO 30 MEGACYCLES/SECOND	
	5.1 Test Circuit	3
	5.2 Test Circuit Calibration	4
	5.3 Circuit RIV Factor (P)	4
6	FIELD MEASUREMENTS OF RIV — 0.015 TO 30 MEGACYCLES/SECOND	
	6.1 Measuring Circuit	4
	6.2 Field Measurement Circuit Calibration	4
7	HIGH-VOLTAGE-TEST-CIRCUIT COMPONENTS	
	7.1 General	4
	7.2 60-cycle Voltage Source	4
	7.3 Power Line Filter (F)	4
	7.4 Variable Voltage (V)	5
	7.5 High-voltage Test Transformer (T)	5
	7.6 Radio-frequency Choke (L)	5
	7.7 High-voltage Coupling Capacitor (C)	5
	7.8 Variable Inductor (L_1)	5
	7.9 Series Shorting Switch (S_1)	5
	7.10 High-voltage Bus (B)	5
	7.11 Noninductive Resistor (R)	5
	7.12 Protective Gap (G)	5
	7.13 Coaxial Cable (CA)	5
	7.14 Noninductive Terminating Resistor (R_1)	5

Copyright National Electrical Manufacturers Association
Provided by IHS under license with NEMA
No reproduction or networking permitted without license from IHS
Not for Resale

FOREWORD

This standard is an extensive revision of the high-voltage-measurement section of "Methods of Measuring Radio Noise, 1940," NEMA Publication No. 107, (EEI Publication No. G9 and RMA Engineering Bulletin No. 32).

The revision was made principally because (1) new American Standard specifications were developed for radio noise meters, (2) modifications in the measurement components were desirable so that commercial coaxial cable could be used with instruments to improve the accuracy and flexibility of measurements on high-voltage apparatus, and (3) it was desirable to extend the frequency range of radio influence voltage (RIV) measurements and to include test circuit calibration.

The changes in the high-voltage-measurement circuit and the radio-noise meter in this publication essentially compensate for corona-type radio noise so that radio influence voltage limits for high-voltage apparatus based on the 1940 edition need not be changed.

The 1940 edition of "Methods of Measuring Radio Noise" is completely superseded by this publication and the following American Standards:

C63.2-1963 American Standard Specifications for Radio-Noise and Field-Strength Meters, 0.015 to 30 Megacycles/Second

C63.4-1963 American Standard Methods of Measurement of Radio-Noise Voltage and Radio-Noise Field Strength, 0.015 to 25 Megacycles/Second, Low-Voltage Electric Equipment and Non-electric Equipment

Copyright National Electrical Manufacturers Association
Provided by IHS under license with NEMA
No reproduction or networking permitted without license from IHS
Not for Resale

9009279 0000005 390

METHODS OF MEASUREMENT OF RADIO INFLUENCE VOLTAGE (RIV) OF HIGH-VOLTAGE APPARATUS

(NEMA Standard 5-18-1964.)

1. Scope and Purpose

1.1 This standard covers the methods of measurement of radio influence voltage in the frequency range of 0.015 to 30 megacycles per second that may be associated with high-voltage power apparatus used on transmission and distribution systems at line voltages of 0.6 kilovolts and above.

1.2 The decision as to whether this standard applies to a specific test sample may be determined from the specifications or standards which apply to the equipment in question.

1.3 The radio influence voltage which is of principle concern in this standard is that voltage appearing at the terminals of test samples or on conductors of power systems which affects the coordination between power and communication circuits. Radio influence voltages may be generated internally in apparatus but be limited by high internal capacitance or impedance of equipment. Such voltages may be of concern in the life of equipment insulation but do not have a bearing on the coordination between power and communication circuits.

1.4 Because of the large voltage range and, consequently, the large change in dimensions of high-voltage test equipment, it is not feasible to define a single standard high-voltage test circuit. The general form of the test circuit is defined, and nominal limits are placed on components of the circuit. In order that uniform and significant radio influence voltage measurements may be made, it is necessary that the test circuits be accurately calibrated as described in this standard. By means of this calibration, the effects of circuit elements and stray circuit constants of the test circuit are taken into consideration.

2. Reference Standard

2.1 The "American Standard Specifications for Radio-Noise and Field-Strength Meters, 0.015 to 30 Megacycles/Second*," C63.2-1963, forms a part of this publication.

3. Definitions

3.1 General. The following definitions apply specifically and only to the subject treated in this standard. For additional definitions see the current edition of the "American Standard Definitions of Electrical Terms*," C42, as approved by American Standards Association, Inc.

3.2 Radio Noise

3.2.1 Radio Influence Voltage (RIV). The voltage which appears on the conductors of electric equipment or circuits, as measured with a standard radio-noise meter used as a 2-terminal voltmeter in accordance with the methods described herein (generally termed "conducted measurements").

3.2.2 Broad-band Radio Noise. Radio noise having a spectrum which is broad compared with the nominal band width of the radio-noise meter.

3.2.3 Impulsive Radio Noise. Radio noise characterized by non-overlapping transient disturbances. This includes corona and other high-voltage discharges.

3.3 Test Sample. The equipment (unit, component assembly or system) which is to be tested to determine the RIV level. Test samples may include any power system equipment, such as insulators, bushings, transformers, switchgear, conductors, etc.

*Copies are available from the American Standards Association, Inc., 10 East 40th Street, New York, N.Y. 10016

Copyright National Electrical Manufacturers Association
Provided by IHS under license with NEMA
No reproduction or networking permitted without license from IHS
Not for Resale

9009279 0000006 227

3.4 *Tests*

3.4.1 Laboratory Tests. Those tests which are made under controlled conditions of ambient radio noise, usually in a shielded enclosure, using a calibrated high-voltage test circuit and a filtered power supply, with the test sample energized so that operating conditions are simulated.

3.4.2 Factory Tests. Those tests which are made in a factory or outdoor area, using a calibrated high-voltage test circuit, with the test sample energized at its rated test voltage so that operating conditions are simulated.

3.4.3 Field Tests. Those tests which are made (usually in an outdoor area) on energized power system equipment or lines, using a high-voltage coupling capacitor and the circuitry described herein.

3.4.4 Circuit RIV Factor (P). The ratio of the voltage at the terminals of the radio-noise meter (E_{cd}) to the signal generator voltage (E_{ab}). Thus, $E_{cd}/E_{ab} = P$.

4. General Test Conditions

4.1 Test Area. For laboratory, factory or field tests, the test area shall be of a suitable size to maintain adequate clearances so that the electric field around the test sample is not distorted. See Figure 3.

4.1.1 Ambient RIV. It is desirable that the ambient RIV level at each measurement frequency be measured for reference purposes at the required test voltage with the test sample disconnected. Where an allowable RIV limit is specified in the applicable specification or standard, it is usually desirable that the ambient RIV level be at least 6 decibels below (one-half) the specified limit. †

4.1.2 Temperature. The ambient temperature of the testing location should preferably be within the range of 10 to 40 C (50 to 104 F). †

However, measurements made at temperatures outside of these limits may be acceptable provided that the test sample, radio-noise meters, indicating devices and equipment are at the test location for a sufficient time prior to making measurements to allow the temperature of the equipment to become stabilized with respect to the temperature of the testing location. Evidence shall be given that the calibrations of the measuring instruments used are accurate for the temperature at which they are used.

4.1.3 Humidity. Tests are conducted under atmospheric conditions prevailing at the time and place of the test, but it is recommended that tests be avoided when the vapor pressure exceeds 0.6 of an inch of mercury. Although there are no correction factors to cover the effect of humidity and barometric pressure at this time, it is recommended that the barometric pressure and wet- and dry-bulb thermometer readings be recorded so that, if suitable correction factors are determined in the future, they may be applied to previous measurements. †

4.2 Test Sample Setup. The arrangement of the components, interconnecting cable assemblies, and supporting structures of the test sample shall be such as to simulate actual installation and operation insofar as is practicable.

4.2.1 RIV Test Voltage. The test voltage shall be 105 percent of the maximum line-to-ground operating voltage. If other test voltages are required, they shall be stated in the individual equipment specification or standard.

4.2.2 Conditioning of Test Sample. The test sample shall be clean and dry, and energized for a sufficient period of time so that representative RIV conditions can be obtained on the specimen prior to making measurements.

4.2.3 Test Sample Grounding. The test sample shall be grounded in order to simulate installation conditions.

4.2.4 Test Sample Leads. The high-voltage leads which are used to connect the test samples to the high-voltage bus shall be free of RIV and corona at the test voltage.

† This paragraph has been approved by NEMA as Authorized Engineering Information.

Copyright National Electrical Manufacturers Association
Provided by IHS under license with NEMA
No reproduction or networking permitted without license from IHS
Not for Resale

9009279 0000007 163

4.3 Instrumentation and Measurements. Radio-noise meters shall meet the requirements of American Standard C63.2-1963.

When making measurements on RIV impulses with repetition rates so low that meter fluctuation makes reading of either the minimum or maximum pointer deflection doubtful, the slow-speed indicating output meter listed in paragraph 16.2 of American Standard C63.2-1963 shall be used. The highest pointer deflection of the meter during a 15-second interval of observation shall be recorded as the RIV so that differences between various operators in recorded results for noise sources with low repetition rates may be minimized.

4.3.1 Radio-noise Meter Calibration. Calibrations and adjustments shall be made as specified in the instruction manual for the radio-noise meter.

4.3.2 Detector Function Selection. The detector function selector switch shall be set to the quasi-peak position on the radio-noise meter.

4.3.3 Monitoring. When it is desired to identify the character of the RIV, measurements should be monitored using either a headset, loud-speaker or oscilloscope. Precautions should be taken to determine whether these devices affect the radio-noise meter indications during measurements. †

4.3.4 Preferred Measurement Frequency. Radio interference studies have indicated that, if radio influence voltages are generated by power system apparatus, readings can be obtained at 1 megacycle per second, the approximate midpoint of the AM broadcast band. Because of this, radio influence tests at the single frequency of 1 megacycle can be considered to produce representative test results, and tests on high-voltage power system apparatus may be carried out at this single frequency. †

4.3.5 Other Measurement Frequencies. For tests requiring measurements from 0.015 to 30 megacycles per second, the test frequencies given in Table 1 are recommended. †

Table 1
Megacycles per Second

0.015	0.080	0.35	1.5	8.0
0.020	0.100	0.50	2.0	10.0
0.028	0.120	0.60	2.8	12.0
0.035	0.15	0.80	3.5	15.0
0.050	0.20	1.00	5.0	20.0
0.060	0.28	0.20	6.0	25.0
				30.0

When possible, other frequencies which are not listed for measurement should be scanned while monitoring with a headset or speaker. If any indicated peaks occur during scanning, measurements should be taken at each frequency where such a peak occurs. If an unwanted radio signal is encountered at any of the listed frequencies, another frequency on either side of the signal should be substituted. †

4.4 Acceptable RIV Test Level. The RIV level of a test sample shall be considered acceptable as long as the measured RIV level, which includes both the test area ambient and test sample RIV, is below the limit specified in the applicable test sample specification on standard.

5. Laboratory and Factory RIV Tests — 0.015 to 30 Megacycles/Second

5.1 Test Circuit. For laboratory and factory RIV tests, the circuit shown in Figure 1 shall be used. Because of the wide frequency range to be covered by this test circuit and the variable attenuation factors which will occur due to stray circuit constants (see C_1 and C_2, stray capacitances, and the series inductance, L_s), the circuit shall be calibrated for each frequency at which RIV measurements are made. At the lower frequencies (below 1.0 megacycle per second) where the reactance of the high-voltage coupling capacitor, C, is generally high, a variometer (circuit element L_1) which is capable of producing series resonance in the high-voltage measuring circuit at the test frequency shall be introduced.

† This paragraph has been approved by NEMA as Authorized Engineering Information.

Copyright National Electrical Manufacturers Association
Provided by IHS under license with NEMA
No reproduction or networking permitted without license from IHS
Not for Resale

9009279 0000008 0TT

5.2 Test Circuit Calibration. The circuit shall be calibrated by applying at points a and b shown in Figures 1 and 2 the unmodulated sine wave output of a signal generator tuned to the desired test frequency. The output of this signal generator shall be set to a level at least ten times the ambient noise level which is measured by the radio-noise meter when tuned to the output of the signal generator. If tests are to be made at or above 1.0 megacycle per second, switch S_1 shall be closed. For tests below 1.0 megacycle per second, switch S_1 shall be open and variable inductance L_1 varied until a maximum signal is obtained on the radio-noise meter. The inductance of L_1 shall be held constant while the voltages E_{ab} (signal generator voltage at point ab) and E_{cd} (voltage at the radio-noise meter terminals, point cd) are measured.

These voltages may be measured by either a high-frequency vacuum-tube voltmeter, an oscilloscope or the radio-noise meter "M" when used as a 2-terminal voltmeter. †

Both voltages shall be measured by the same instrument so that error is minimized. The coaxial cable, CA, of the length to be used for RIV measurements shall be in the circuit when the test circuit calibration is made.

5.3 Circuit RIV Factor (P). The circuit RIV factor (P) shall be held above 0.5 at each test frequency up to 5 megacycles per second.

Since this factor will vary with frequency, a curve of the RIV factor should be obtained for the test circuit. See Figure 4 for sample curve. The calibration curve so obtained may not be valid if the circuit components or the circuit configuration is changed. †

In carrying out radio influence voltage tests with the sample positioned at point ab, RIV meter readings shall be made in the manner described in 4.3. The reading so obtained shall then be divided by the circuit RIV factor (P) (at the specific test frequency) to obtain the RIV level of the equipment under test.

6. Field Measurements of RIV— 0.015 to 30 Megacycles/Second

6.1 Measuring Circuit. For the measurements of RIV from the conductors and apparatus of an energized power system, the measuring circuit shown in Figure 2 may be used. Extreme care should be taken to insure that the application of this measuring circuit to the power system does not interfere with the normal operation of the circuit and that proper grounding of the low-voltage measuring circuit is carried out so that the equipment and operators are not endangered. †

6.2 Field Measurement Circuit Calibration. The measuring circuit may be calibrated in accordance 5.1 before the high-voltage coupling capacitor is connected to the power system. In carrying out this field calibration, precautions should be taken to insure that radio influence fields and conducted influence voltages (RIF and RIV) from the power system do not affect the calibration. †

7. High-voltage-test-circuit Components

7.1 General. The following components refer to items which are associated with the high-voltage RIV test circuits indicated schematically in Figures 1 and 2 and illustrated in Figure 3.

7.2 60-cycle Voltage Source. The power supply for the high-voltage test circuit shall have a kva rating which is sufficient to supply a 60-cycle sine wave voltage of acceptable commercial standard as defined in the "American Standard for Rotating Electrical Machinery*," C50 series.

7.3 Power Line Filter (F). The power line filter, when employed, shall not distort the supply voltage. It shall suppress any RIV which may be on the power mains so that the conditions given in 4.1.1 will be met.

*Copies are available from the American Standards Association, Inc., 10 East 40th Street, New York, N.Y. 10016
† This paragraph has been approved by NEMA as Authorized Engineering Information.

Copyright National Electrical Manufacturers Association
Provided by IHS under license with NEMA
No reproduction or networking permitted without license from IHS
Not for Resale

9009279 0000009 T36

7.4 Variable Voltage (V). A variable and undistorted voltage shall be supplied to the primary of the high-voltage test transformer.

7.5 High-voltage Test Transformer (T). The high-voltage test transformer should be free of RIV within the voltage range at which tests are to be made. †

7.6 Radio-frequency Choke (L). A radio-frequency choke with an impedance of not less than 1500 ohms at the measurement frequency shall be installed at or near the top of the high-voltage coupling capacitor. This element shall limit the loss of conducted radio-frequency energy from the test sample and shall be free of RIV within the voltage range of the test circuit.

7.7 High-voltage Coupling Capacitor (C). The high-voltage coupling capacitor of the required voltage rating shall be free of RIV within the voltage range of the test circuit.

A coupling capacitor of small capacitance will draw a minimum current, but at the lower test frequencies it will appear as an excessively high reactive element and produce a low RIV factor (P) as described in section 5. It is recommended that the capacitance be not less than 0.001 microfarad. The capacitance from the bottom end of the coupling capacitor to ground should be kept small so that this capacitance will not appreciably reduce the impedance of 150 ohms obtained from R and R_1 in parallel. †

7.8 Variable Inductor (L_1). A variable inductor or inductors shall be used at the lower test frequencies (below 1 megacycle per second) to balance out the capacitive reactance of the high-voltage coupling capacitor, C.

7.9 Series Shorting Switch (S_1). A series shorting switch shall be applied across variable inductor L_1, when L_1 is used, to short out the inductor during RIV tests at 1.0 megacycle per second and above.

7.10 High-voltage Bus (B). A corona-free bus shall be connected from the high-voltage coupling capacitor to the test sample. This bus shall be supported by a minimum number of RIV-free insulators to minimize stray capacitance (C_2) to ground and shall be as short as possible to minimize series inductance (L_s).

The smooth conductor diameter for a corona-free bus for voltages up to 400 kilovolts may be obtained by allowing at least 0.01 inch of bus diameter per kilovolt of test voltage. Above 400 kilovolts bundled conductors may be preferred to single conductors. †

7.11 Noninductive Resistor (R). A noninductive 800-ohm resistor shall be connected between the series inductance (L_1) and ground. For reasons of safety, this unit shall be substantial in size, and all electrical connections shall be made mechanically and electrically secure.

7.12 Protective Gap (G). A suitable protective gap (breakdown not to exceed 500 volts) shall be connected across circuit element R.

7.13 Coaxial Cable (CA). A coaxial cable having a characteristic impedance of 185 ohms shall be connected between the noninductive resistor R and the radio-noise meter M.

Because of the high attenuation of this cable, it is recommended that the cable length be kept as short as possible in order to meet the circuit RIV factor (P) requirement. †

The cable shall be in the circuit and terminated in 185 ohms when calibrating the test circuit in accordance with 5.1.

7.14 Noninductive Terminating Resistor (R_1). A noninductive 185-ohm resistor shall be used to terminate the coaxial cable at the input of the radio-noise meter.

† This paragraph has been approved by NEMA as Authorized Engineering Information.

Copyright National Electrical Manufacturers Association
Provided by IHS under license with NEMA
No reproduction or networking permitted without license from IHS
Not for Resale

Copyright National Electrical Manufacturers Association
Provided by IHS under license with NEMA
No reproduction or networking permitted without license from IHS

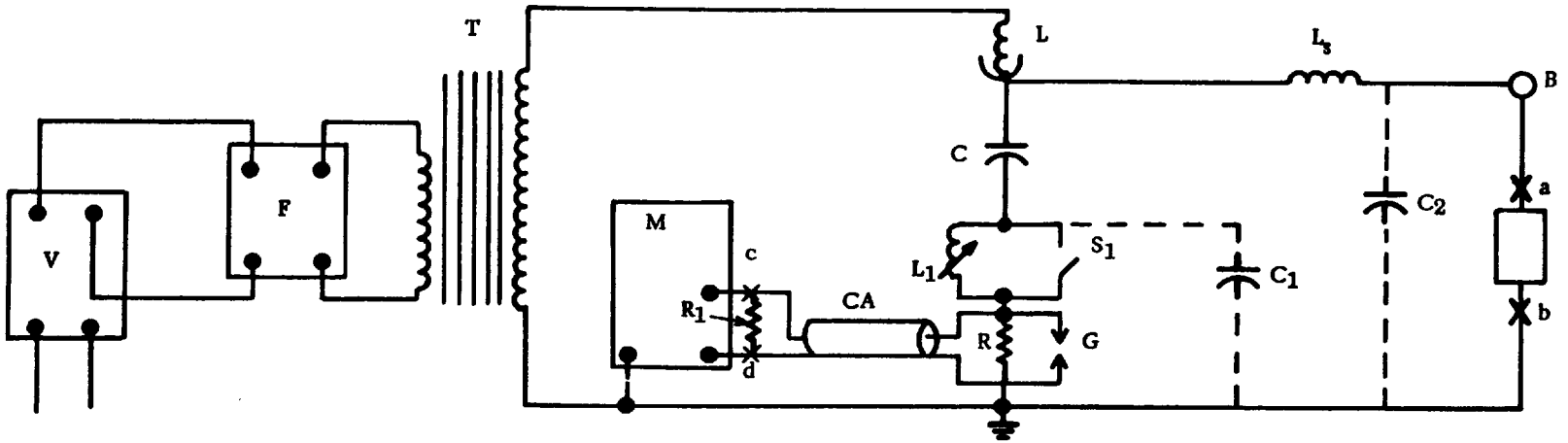

Item	Description	See Paragraph
B	High-voltage bus	7.10
C	High-voltage coupling capacitor	7.7
CA	Coaxial cable	7.13
C_1 and C_2	Stray capacitance of test circuit	....
F	Power line filter	7.3
G	Protective gap	7.12
L	Radio-frequency choke	7.6
L_s	Inductance of test circuit	....
L_1	Variable inductor	7.8
M	Radio-noise meter	4.3
R_1 and R	Noninductive resistors	7.11 and 7.14
S_1	Series shorting switch	7.9
T	High-voltage test transformer	7.5
V	Variable voltage	7.4
Point ab	Position of test sample or calibrating signal generator	....
Point cd	RIV measurement point or place at which E_{cd} is measured	5.3

Fig. 1
CIRCUIT FOR THE MEASUREMENT OF RADIO-INFLUENCE VOLTAGE OF HIGH-VOLTAGE APPARATUS, 0.015 TO 30 MEGACYCLES PER SECOND

Not for Resale

9009279 0000010 758

Copyright National Electrical Manufacturers Association
Provided by IHS under license with NEMA
No reproduction or networking permitted without license from IHS
Not for Resale

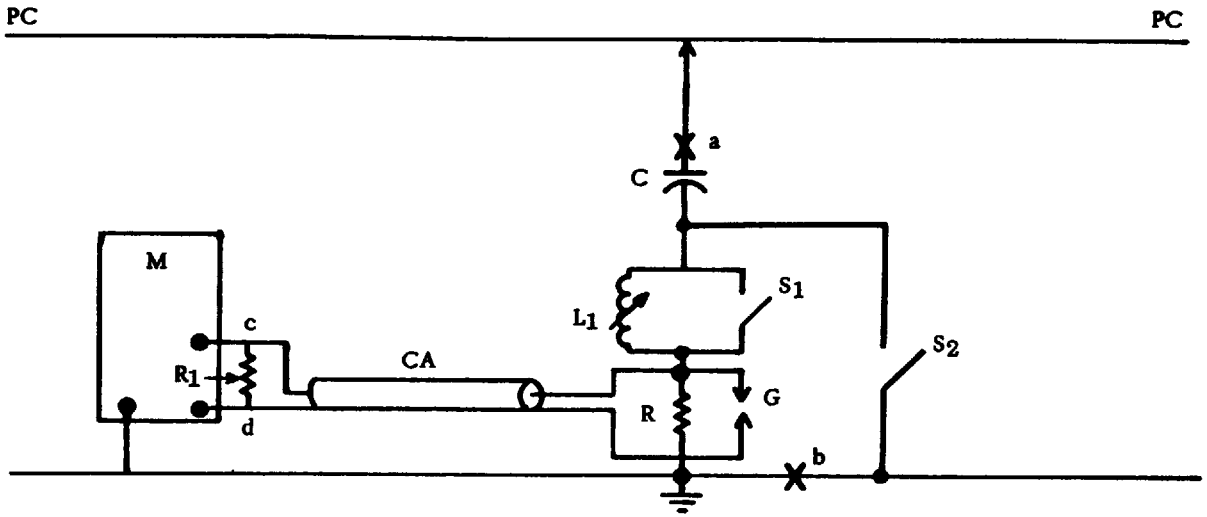

Item	Description	See Paragraph
C	High-voltage coupling capacitor	7.7
CA	Coaxial cable	7.13
G	Protective gap	7.12
L_1	Variable inductor	7.8
M	Radio-noise meter	4.3
PC	Power system conductor	....
R_1 and R	Noninductive resistors	7.11 and 7.14
S_1	Series shorting switch	7.9
S_2	Capacitor grounding switch	....
Point ab	Position of calibrating signal generator, switch S_2 open	....
Point cd	RIV measurement point or place at which E_{cd} is measured	5.3

Fig. 2
CIRCUIT FOR THE MEASUREMENT OF RADIO-INFLUENCE VOLTAGE FROM AN ENERGIZED POWER SYSTEM

9009279 0000014 694

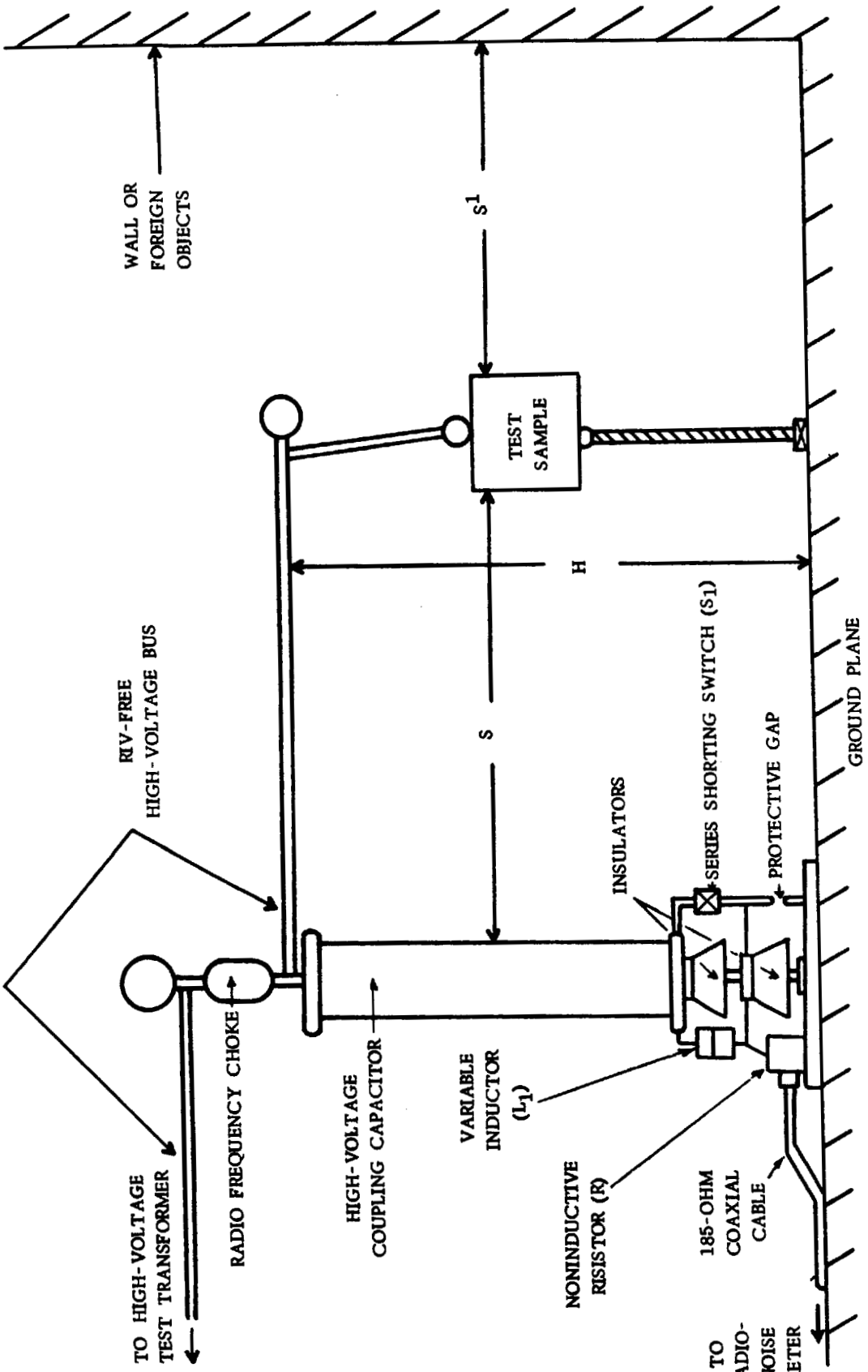

Fig. 3
SETUP OF HIGH-VOLTAGE RIV TEST CIRCUIT

NOTE—The length of dimensions S, S^1 and H shall be such that the high-voltage electric field around the test sample is not distorted.

Copyright National Electrical Manufacturers Association
Provided by IHS under license with NEMA
No reproduction or networking permitted without license from IHS
Not for Resale

Copyright National Electrical Manufacturers Association
Provided by IHS under license with NEMA
No reproduction or networking permitted without license from IHS
Not for Resale

9009279 0000013 467

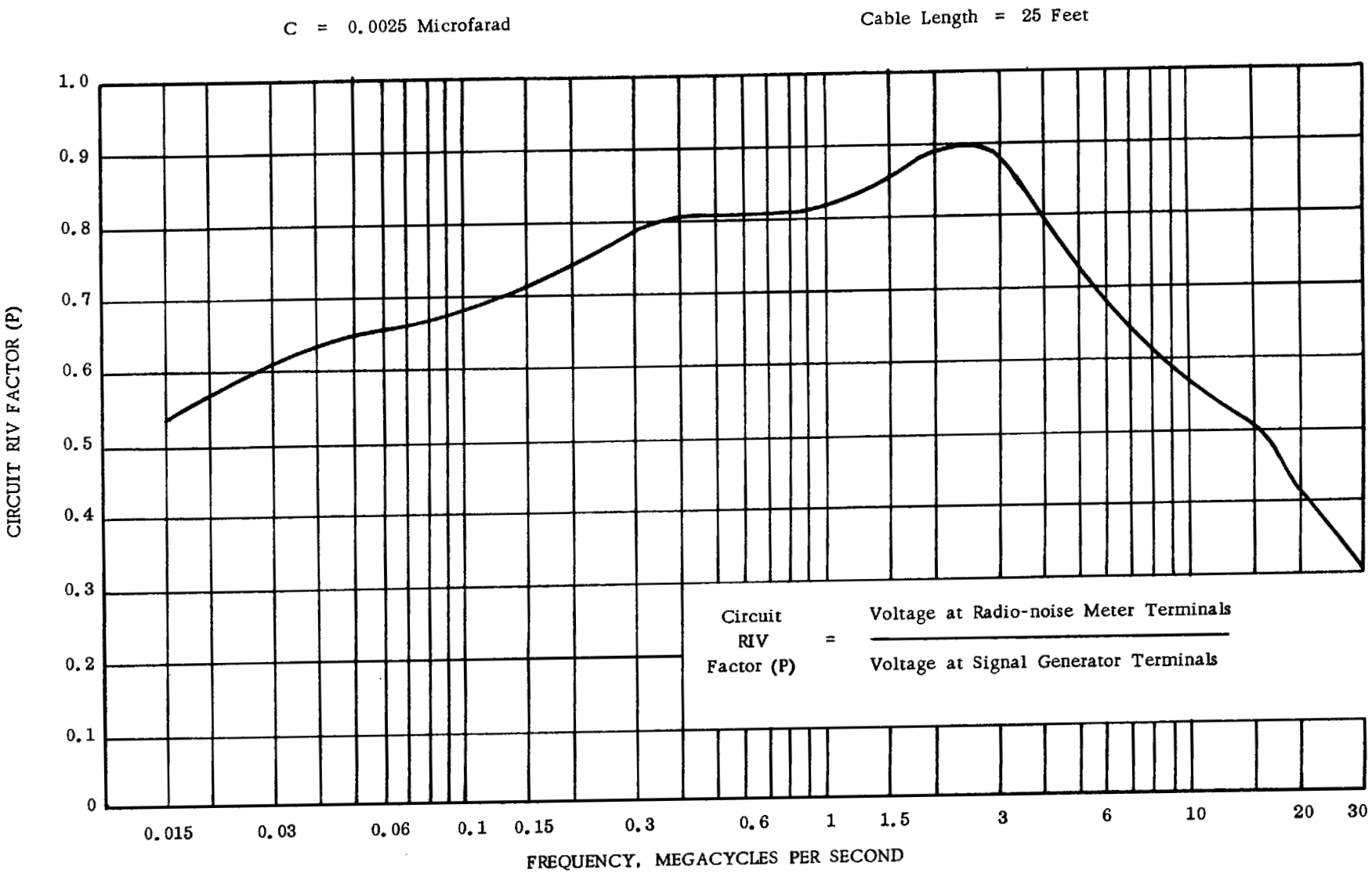

Fig. 4
SAMPLE CURVE
CIRCUIT RIV FACTOR (P) VERSUS FREQUENCY

9009279 0000014 3T3

NEMA STANDARDIZATION

The purpose of NEMA Standards, their classification and status are set forth in certain clauses of the NEMA Bylaws, which are quoted below:

Purpose of Standards

National Electrical Manufacturers Association Standards are adopted in the public interest and are designed to eliminate misunderstandings between the manufacturer and the purchaser and to assist the purchaser in selecting and obtaining the proper product for its particular need. Existence of a National Electrical Manufacturers Association Standard does not in any respect preclude any member or nonmember from manufacturing or selling products not conforming to the standard.

(Bylaw—Art. V, Sec. 1)

Definition of a Standard

A standard of the National Electrical Manufacturers Association defines a product, process or procedure with reference to one or more of the following: nomenclature, composition, construction, dimensions, tolerances, safety, operating characteristics, performance, rating, testing, and the service for which they are designed.

(Bylaw—Art. V, Sec. 2, Subsection A)

Dimensions

Where dimensions are given for interchangeability purposes, alternate dimensions satisfying the other provisions of the standards publication may be capable of otherwise equivalent performance.

(NEMA Policy Memorandum 84-2, dated June 7, 1984)

Classes of Standards

National Electrical Manufacturers Association Standards are of two classes:

1. NEMA Standard, which relates to a product commercially standardized and subject to repetitive manufacture, which standard has been approved by at least 90 percent of the members of the Subdivision eligible to vote thereon;
2. Suggested Standard for Future Design, which may not have been regularly applied to a commercial product, but which suggests a sound engineering approach to future development, which standard has been approved by at least two-thirds of the members of the Subdivision eligible to vote thereon.

(Bylaw—Art. V, Sec. 2, Subsection B)

Authorized Engineering Information

Authorized Engineering Information consists of explanatory data and other engineering information of an informative character not falling within the classification of NEMA Standard or Suggested Standard for Future Design.

(Bylaw—Art. V, Sec. 6, 1st Sentence)

Official Standards Proposal

An Official Standards Proposal is an official draft of a proposed standard which is formally recommended to an outside organization(s) for consideration, comment and/or approval.

(Bylaw—Art. V, Sec. 4, Subsection A)

Identification of Status

Standards in NEMA Standards Publications are identified in the foreword or following each standard as "NEMA Standard" or "Suggested Standard for Future Design." These indicate the status of the standard. These words are followed by a date which indicates when the standard was adopted in its present form by the Association.

The material identified as "Authorized Engineering Information" and "Official Standards Proposal" is designated similarly.

Copyright National Electrical Manufacturers Association
Provided by IHS under license with NEMA
No reproduction or networking permitted without license from IHS
Not for Resale