INTERNATIONAL STANDARD

ISO 30061
CIE S 020/E

First edition
2007-11-01

Emergency lighting

Éclairage de secours

Reference number
ISO 30061:2007(E)
CIE S 020/E:2007

© ISO 2007

Licensed to Pattaraporn Sritrakool. ANSI order X_271503. Downloaded 4/23/2012 7:29 AM. Single user license only. Copying and networking prohibited.

PDF disclaimer

This PDF file may contain embedded typefaces. In accordance with Adobe's licensing policy, this file may be printed or viewed but shall not be edited unless the typefaces which are embedded are licensed to and installed on the computer performing the editing. In downloading this file, parties accept therein the responsibility of not infringing Adobe's licensing policy. The ISO Central Secretariat accepts no liability in this area.

Adobe is a trademark of Adobe Systems Incorporated.

Details of the software products used to create this PDF file can be found in the General Info relative to the file; the PDF-creation parameters were optimized for printing. Every care has been taken to ensure that the file is suitable for use by ISO member bodies. In the unlikely event that a problem relating to it is found, please inform the Central Secretariat at the address given below.



COPYRIGHT PROTECTED DOCUMENT

© ISO 2007

All rights reserved. Unless otherwise specified, no part of this publication may be reproduced or utilized in any form or by any means, electronic or mechanical, including photocopying and microfilm, without permission in writing from either ISO at the address below or ISO's member body in the country of the requester.

ISO copyright office
Case postale 56 • CH-1211 Geneva 20
Tel. + 41 22 749 01 11
Fax + 41 22 749 09 47
E-mail copyright@iso.org
Web www.iso.org

Published in Switzerland

© ISO 2007 — All rights reserved

Licensed to Pattaraporn Sritrakool. ANSI order X_271503. Downloaded 4/23/2012 7:29 AM. Single user license only. Copying and networking prohibited.

Foreword

ISO (the International Organization for Standardization) is a worldwide federation of national standards bodies (ISO member bodies). The work of preparing International Standards is normally carried out through ISO technical committees. Each member body interested in a subject for which a technical committee has been established has the right to be represented on that committee. International organizations, governmental and non-governmental, in liaison with ISO, also take part in the work. ISO collaborates closely with the International Electrotechnical Commission (IEC) on all matters of electrotechnical standardization.

ISO 30061 was prepared as Standard CIE S 020/E by the International Commission on Illumination, which has been recognized by the ISO Council as an international standardizing body. It was adopted by ISO under a special procedure which requires approval by at least 75 % of the member bodies casting a vote, and is published as a joint ISO/CIE edition.

The International Commission on Illumination (abbreviated as CIE from its French title) is an organization devoted to international cooperation and exchange of information among its member countries on all matters relating to the science and art of lighting.

ISO 30061 was prepared by CIE Technical Committee 5-19 *Emergency Lighting*.

© ISO 2007 — All rights reserved

Licensed to Pattaraporn Sritrakool. ANSI order X_271503. Downloaded 4/23/2012 7:29 AM. Single user license only. Copying and networking prohibited.

Licensed to Pattaraporn Sritrakool. ANSI order X_271503. Downloaded 4/23/2012 7:29 AM. Single user license only. Copying and networking prohibited.

COMMISSION INTERNATIONALE DE L'ECLAIRAGE
INTERNATIONAL COMMISSION ON ILLUMINATION
INTERNATIONALE BELEUCHTUNGSKOMMISSION

CIE S 020/E:2007

Standard

Emergency Lighting

Eclairage de secours

Notbeleuchtung

CIE Standards are copyrighted and shall not be reproduced in any form, entirely or partly, without the explicit agreement of the CIE.

CIE Central Bureau, Vienna
Kegelgasse 27, A-1030 Vienna, Austria

CIE S 020/E:2007

UDC: 628.978.6 Descriptor: Emergency lighting

© CIE 2007 — All rights reserved
© ISO 2007 — All rights reserved

Licensed to Pattaraporn Sritrakool. ANSI order X_271503. Downloaded 4/23/2012 7:29 AM. Single user license only. Copying and networking prohibited.

© CIE 2007

All rights reserved. Unless otherwise specified, no part of this publication may be reproduced or utilized in any form or by any means, electronic or mechanical, including photocopying and microfilm, without permission in writing from CIE Central Bureau at the address below.

CIE Central Bureau
Kegelgasse 27
A-1030 Vienna
Austria
Tel.: +43 1 714 3187 0
Fax: +43 1 714 3187 18
e-mail: ciecb@ping.at
Web: www.cie.co.at/

© CIE 2007 — All rights reserved
© ISO 2007 — All rights reserved

Licensed to Pattaraporn Sritrakool. ANSI order X_271503. Downloaded 4/23/2012 7:29 AM. Single user license only. Copying and networking prohibited.

FOREWORD

Standards produced by the Commission Internationale de l'Eclairage (CIE) are a concise documentation of data defining aspects of light and lighting, for which international harmony requires such unique definition. CIE Standards are therefore a primary source of internationally accepted and agreed data, which can be taken, essentially unaltered, into universal standard systems.

This CIE Standard has been prepared by CIE Technical Committee TC 5-19* "Emergency Lighting":

TABLE OF CONTENTS

FOREWORD iv
1. INTRODUCTION 1
2. SCOPE 1
3. NORMATIVE REFERENCES 1
4. TERMS AND DEFINITIONS 2
5. ESCAPE LIGHTING 3
6. ESCAPE ROUTE LIGHTING 4
7. OPEN AREA (ANTI-PANIC) LIGHTING 5
8. HIGH RISK TASK AREA LIGHTING 6
9. STANDBY LIGHTING 6
10. SAFETY SIGNS 6
10.1 Standards 6
10.2 Colour 6
10.3 Luminance 6
10.3.1 Requirements for emergency mode 6
10.3.2 Requirements for non-emergency mode 7
10.4 Uniformity 7
10.4.1 Uniformity of colours 7
10.4.2 Uniformity between colours 7
10.5 Height of the sign equating to viewing distance 7
11. INFLUENCE OF SMOKE 7
12. ANNEX (INFORMATIVE): BIBLIOGRAPHY 8

* The chairperson of this TC was B. Weis (DE); members were: J. Audestad (NO), J. Breaden (AU), M. C. Crawford (US), H. Finke (DE), J. Horváth ✞ (HU), H. Juslén (FI), J. Lecocq (FR), T. Lemons (US), J. L. Pimenta (BR), P. Rombauts (BE), A. Stockmar (DE), A. Tanaka (JP), G. Vandermeersch (BE), and C. Watts (UK), with the following committee advisors: P. K. Bandyopadhyay (IN), E. Bistricky (AU), A. Ottosson (SE), N. Radovanović (YU), M. K. Timmings (CA), N. Vassilev (BG), J. Wild (PL).

© CIE, 2007

© CIE 2007 — All rights reserved
© ISO 2007 — All rights reserved

Licensed to Pattaraporn Sritrakool. ANSI order X_271503. Downloaded 4/23/2012 7:29 AM. Single user license only. Copying and networking prohibited.

© CIE 2007 — All rights reserved
© ISO 2007 — All rights reserved

Licensed to Pattaraporn Sritrakool. ANSI order X_271503. Downloaded 4/23/2012 7:29 AM. Single user license only. Copying and networking prohibited.

EMERGENCY LIGHTING

1. INTRODUCTION

The primary objective of emergency lighting is the provision of visual conditions that can alleviate panic and facilitate safer evacuation of buildings' occupants during the failure of normal power supply/lighting, in clear (non-smoke) and smoke filled conditions.

The emergency lighting scheme design should be based on worst conditions (e.g. minimum light output, maximum glare limits) of the luminaires during operating life and should be based only on direct light from luminaires. The contributions by room surface inter-reflections should be ignored. However, in lighting systems such as indirect luminaires or uplights (used in maintained/combined mode), where the luminaire works in conjunction with a reflecting surface, the first reflection should be taken as direct light from the system and subsequent reflections should be ignored.

The requirements given in this standard are a minimum for design purposes and are calculated for the full rated duration period and end of design life of the equipment. A special chapter for smoke is included.

Safety signs may also fulfil further functions within maintained operation.

In most countries, states or towns statutory regulations relating to emergency lighting already exist. For this reason, the appropriate authority should always be consulted before commencing the design of a specific emergency lighting system. It is hoped that by providing an international standard, lighting technical requirements in local statutory regulations will converge on that standard.

2. SCOPE

This standard specifies the luminous requirements for emergency lighting systems installed in premises or locations where such systems are required. It is principally applicable to locations where the public or workers have access.

3. NORMATIVE REFERENCES

The following referenced documents are indispensable for the application of this document. For dated references, only the edition cited applies. For undated references, the latest edition of the referenced document (including any amendments) applies.

CIE 17.4-1987. *International lighting vocabulary* (ILV) (Joint publication IEC/CIE).

IEC 60598-2-22. *Luminaires – Part 2-22: Particular requirements - Luminaires for emergency lighting.*

ISO 3864-1. *Graphical symbols – Safety colours and safety signs – Part 1: Design principles for safety signs in workplaces and public areas.*

ISO 6309. *Fire protection – Safety signs.*

ISO 7010. *Graphical symbols – Safety signs used in workplaces and public areas.*

ISO 16069. *Graphical symbols – Safety signs – Safety way guidance systems (SWGS).*

© CIE 2007 — All rights reserved
© ISO 2007 — All rights reserved

Licensed to Pattaraporn Sritrakool. ANSI order X_271503. Downloaded 4/23/2012 7:29 AM. Single user license only. Copying and networking prohibited.

4. TERMS AND DEFINITIONS

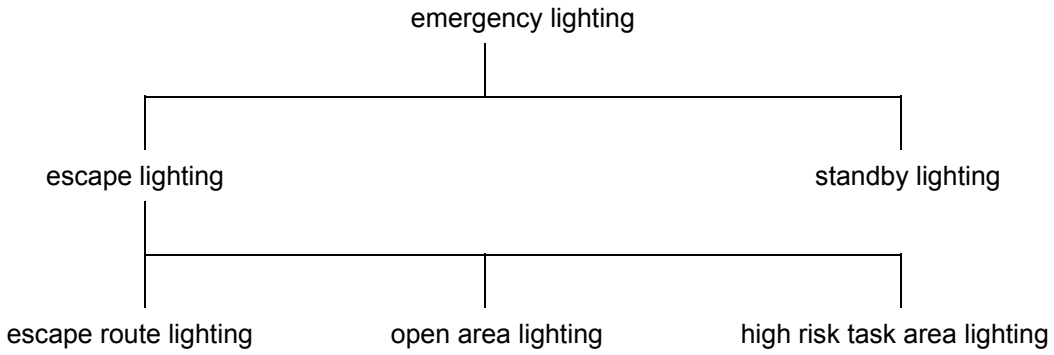

Fig. 1. Specific terms of emergency lighting.

4.1 emergency lighting (ILV 845-09-10)

lighting provided for use when the supply to the normal lighting fails

4.2 escape route

route designed for escape in the event of an emergency

4.3 escape lighting

that part of emergency lighting that provides illumination of escape routes, open area lighting, and high risk task area lighting when normal lighting fails, as well as guidance markings whenever the escape routes are occupied

4.4 standby lighting (ILV 845-09-13)

that part of emergency lighting provided to enable normal activities to continue substantially unchanged

4.5 escape route lighting

that part of emergency lighting provided to ensure that the routes of escape can be effectively identified and safely used and that obstructions within the escape route are visible

4.6 open area lighting (in some countries known as anti-panic lighting)

that part of emergency lighting provided to avoid panic and to provide illumination allowing people to reach a place where an escape route can be identified

4.7 high risk task area lighting

that part of emergency lighting that provides illumination for the safety of people involved in a potentially dangerous process or situation and to enable proper shut down procedures for the operator and other occupants of the premises

4.8 emergency exit

way out that is intended to be used during an emergency

4.9 safety sign

sign which gives a general safety message, obtained by a combination of colour and geometric shape and which, by the addition of a graphic symbol or text, gives a particular safety message (ISO 3864-1 / ISO 6309 / ISO 7010)

4.10 externally illuminated safety sign

sign that is illuminated, when it is required, by an external source

© CIE 2007 — All rights reserved
© ISO 2007 — All rights reserved
Licensed to Pattaraporn Sritrakool. ANSI order X_271503. Downloaded 4/23/2012 7:29 AM. Single user license only. Copying and networking prohibited.

4.11 internally illuminated safety sign

sign that is illuminated, when it is required, by an internal source

4.12 escape route sign

safety sign used to mark directions and exits in escape routes

4.13 direction escape route sign

safety sign to mark the direction of an escape route

4.14 exit sign

safety sign to mark emergency exits

4.15 safety way guidance system (ISO 16069)

system to provide conspicuous and unambiguous information and sufficient visual cues to enable people to evacuate an occupied area in an emergency along a specified escape route by using a comprehensive arrangement of visual components, signs, and markings

4.16 duration of emergency mode

time interval that the rated lumen output shall be provided

4.17 rated duration of emergency mode

time interval, as claimed by the manufacturer, that the rated emergency lumen output is provided (IEC 60598-2-22)

5. ESCAPE LIGHTING

To provide visibility for evacuation, lighting is required in the volume of the space. Safety signs that are provided at all exits intended to be used in an emergency and along escape routes shall be illuminated to indicate unambiguously the route of escape to a point of safety.

Where direct sight of an emergency exit is not possible, an illuminated safety sign (or series of signs) shall be provided to assist progression towards the emergency exit.

An escape lighting luminaire complying with IEC 60598-2-22 shall be sited to provide appropriate illuminance near each exit door and at positions where it is necessary to emphasize potential danger or the location of safety equipment. The places for which emphases shall be considered are listed as the following:

a) at each exit door intended to be used in an emergency;

b) at stairs so that each flight of stairs receives direct light including especially the top and the bottom steps;

c) at any other change in vertical level;

d) at mandatory emergency exits and safety sign locations;

e) at each change of direction;

f) at each intersection of corridors;

g) at each final exit;

h) at each first aid post;

i) at each piece of fire fighting equipment and call point;

j) if smoke is of prime concern, it is recommended to mount luminaires at least 0,5 m below the ceiling (see also Chapter 11).

Positions denoted as b, c, h, and i, if not on the escape route nor in an open area shall be illuminated to 5 lx minimum at the floor.

© CIE 2007 — All rights reserved
© ISO 2007 — All rights reserved

Licensed to Pattaraporn Sritrakool. ANSI order X_271503. Downloaded 4/23/2012 7:29 AM. Single user license only. Copying and networking prohibited.

6. ESCAPE ROUTE LIGHTING

6.1 For escape routes up to 2 m in width, the horizontal illuminance on the floor along the centre line of an escape route shall not be less than 1 lx and the central band consisting of not less than half of the width of the route shall be illuminated to a minimum of 50 % of that value.

NOTE: Wider escape routes can be treated as a number of 2 m wide strips or be provided with open area (anti-panic) lighting.

6.2 The ratio of the maximum to the minimum illuminance along the centre line of the escape route shall not be greater than 40 : 1.

NOTE: To prove the ratio a grid system should be used according to CIE S 015, chap. 4.3.3.

6.3 Disability glare shall be kept low by limiting the luminous intensity of each luminaire within the field of view during the maximum lumen output in emergency mode of operation.

For horizontal escape routes, the luminous intensity of the luminaires shall not exceed the values in Table 1 within the zone 60° to 90° from the downward vertical at all angles of azimuth (see Fig. 2).

For all other escape routes and areas, the limiting values shall not be exceeded at any angle (see Fig. 3).

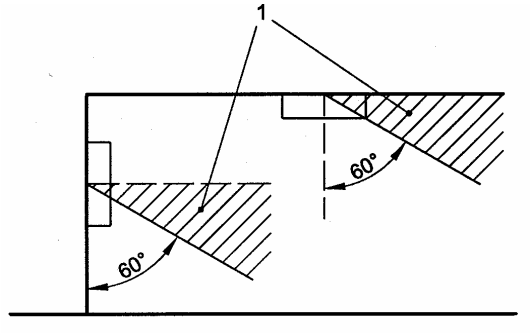

Fig. 2. Glare zone.

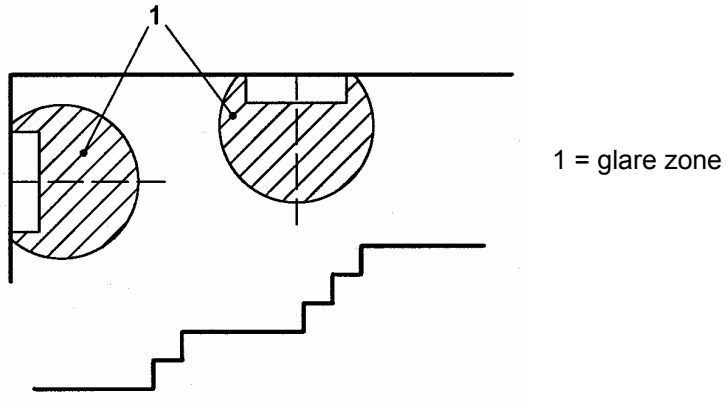

Fig. 3. Glare zone.

NOTE: High contrast between a luminaire and its background can produce glare. In escape route lighting the main problem will be disability glare, in which the brightness of the luminaires can dazzle and prevent obstructions or signs from being seen.

© CIE 2007 — All rights reserved
© ISO 2007 — All rights reserved

Licensed to Pattaraporn Sritrakool. ANSI order X_271503. Downloaded 4/23/2012 7:29 AM. Single user license only. Copying and networking prohibited.

Table 1. Disability glare limits.

Mounting height above floor level H in m	Escape route and open area (anti-panic) lighting luminous intensity I_{max} in cd	High risk task area lighting maximum luminous intensity I_{max} in cd
$H < 2,5$	500	1000
$2,5 \leq H < 3,0$	900	1800
$3,0 \leq H < 3,5$	1600	3200
$3,5 \leq H < 4,0$	2500	5000
$4,0 \leq H < 4,5$	3500	7000
$4,5 \leq H$	5000	10000

NOTE: Values to be compared with the data of the luminaire(s).

6.4 In order to identify safety colours, the minimum value for the colour rendering index R_a from a lamp shall be > 40. The luminaire shall not substantially subtract from this.

6.5 The duration and response time should conform to national requirements.

NOTE: If these do not exist then the following minimum is recommended:

Duration: 60 min. If the visual task, or the risk to people, requires a longer duration, 180 min is recommended.

Response time: The emergency escape route lighting shall reach 50% of the required illuminance level within 20 s and full required illuminance within 60 s. If the visual task, or the risk to people, requires a shorter response time, for reaching the 50% level, a shortening of the response time to 5 s is recommended.

7. OPEN AREA (ANTI-PANIC) LIGHTING

7.1 The horizontal illuminance shall be not less than 0,5 lx at the floor level at each point of the empty core area which excludes a border of 0,5 m of the perimeter of the area.

7.2 The ratio of the maximum to the minimum anti-panic area lighting illuminance shall not be greater than 40 : 1.

NOTE: To prove the ratio a grid system should be used according to CIE S 015, chap. 4.3.3.

7.3 Disability glare shall be kept low by limiting the luminous intensity of the luminaires within the field of view during the maximum lumen output in emergency mode of operation. These shall not exceed the values in Table 1 within the zone 60° to 90° from the downward vertical at all angles of azimuth (see Fig. 2).

7.4 In order to identify safety colours, the minimum value for the colour rendering index R_a from a lamp shall be > 40. The luminaire shall not substantially subtract from this.

7.5 The duration and response time should conform to national requirements.

NOTE: If these do not exist then the following minimum is recommended:

Duration: 60 min.

Response time: The open area (anti-panic) lighting shall reach 50% of the required illuminance level within 20 s and full required illuminance within 60 s. If the visual task, or the risk to people, requires a shorter response time, for reaching the 50% level, a shortening of the response time to 5 s is recommended.

© CIE 2007 — All rights reserved
© ISO 2007 — All rights reserved

Licensed to Pattaraporn Sritrakool. ANSI order X_271503. Downloaded 4/23/2012 7:29 AM. Single user license only. Copying and networking prohibited.

8. HIGH RISK TASK AREA LIGHTING

8.1 In areas of high risk, the maintained illuminance on the reference plane shall be not less than 10 % of the required maintained illuminance for that task; however, it shall not be less than 15 lx. It shall be free of stroboscopic effects.

NOTE: Some critical areas (e.g. medical operating rooms) may require up to 100 % of the maintained illuminance of the specific task. For this purpose, the values in Table 1 do not apply.

8.2 The ratio of the maximum to the minimum of the high risk task area lighting illuminance shall not be greater than 10 : 1.

8.3 Disability glare shall be kept low by limiting the luminous intensity of the luminaires within the field of view during the maximum lumen output in emergency mode of operation; these shall not exceed the values in Table 1 within the zone 60° to 90° from the downward vertical at all angles of azimuth.

8.4 In order to identify safety colours, the minimum value for the colour rendering index R_a of a lamp shall be > 40. The luminaire shall not substantially subtract from this.

8.5 The duration and response time should conform to national requirements.

NOTE: If these do not exist then the following minimum is recommended:

Duration: 60 min.

Response time: High risk task area lighting shall be the required full illuminance permanently or within 0,5 s depending upon the application.

9. STANDBY LIGHTING

Standby lighting shall not be used for escape lighting purposes. If standby lighting is modified to be used for emergency lighting purposes, it shall comply with the relevant requirements of this standard.

10. SAFETY SIGNS

Safety signs for emergency escape and first aid signs shall meet the following requirements:

10.1 Standards

Safety signs along and adjacent to escape routes shall meet ISO 3864-1 and ISO 7010 and ISO 6309.

The areas around safety equipment shall be marked with the appropriate safety marking according to ISO 3864-1. These signs and markings will provide supplementary visual orientation cues to evacuees. Arrows shall not be used for the marking of location of such equipment along or adjacent to escape routes.

10.2 Colour

The colour shall conform to the requirements of ISO 3864-1.

10.3 Luminance

10.3.1 Requirements for emergency mode

The luminance of any area of safety colour of the sign shall be at least 2 cd/m^2 in all relevant directions.

If smoke is of prime consideration, the luminance shall be at least 10 cd/m^2.

© CIE 2007 — All rights reserved
© ISO 2007 — All rights reserved

Licensed to Pattaraporn Sritrakool. ANSI order X_271503. Downloaded 4/23/2012 7:29 AM. Single user license only. Copying and networking prohibited.

10.3.2 Requirements for non-emergency mode

The luminance shall be as specified in ISO 3864-1.

10.4 Uniformity

10.4.1 Uniformity of colours

The uniformity of the luminance within the safety colour and contrast colour, measured as the ratio of minimum to maximum luminance within the colour, shall be greater than 1 : 5 (see ISO 3864-1).

NOTE: If the luminance of the safety sign is greater than 100 cd/m^2, the ratio of minimum to maximum luminance within the colour shall be greater than 1 : 10.

10.4.2 Uniformity between colours

The ratio of the luminance $L_{\text{contrast colour}}$ to the adjacent luminance $L_{\text{safety colour}}$ shall not be less than 5 : 1 and not greater than 15 : 1.

10.5 Height of the sign equating to viewing distance

The relationship between the greatest distance from which the safety sign is legible and conspicuous in shape and colour and the height of the safety sign together with the distance factor Z is given by the following equation:

$$h = l / Z$$

where

l is the distance of observation;

h is the minimum height of the sign;

Z is the factor of distance.

Z is a constant with 100 for externally illuminated signs and 200 for internally illuminated signs.

NOTE: The determination of the viewing distance according to this specification requires a ratio of the height of the sign to the height of the symbol as specified in ISO 3864-1.

11. INFLUENCE OF SMOKE

Generally smoke accumulates at the ceiling where it can obscure high mounted safety signs. Therefore, when smoke is of prime consideration, the following recommendations apply:

- near floor components of a safety way guidance system (ISO 16069) should be added;
- the luminance of any area of the safety colour (according to ISO 3864-1) of exit signs and direction arrows should be at least 10 cd/m^2;
- the luminaires should be mounted at least 0,5 m below the ceiling to avoid absorbance by smoke. Conspicuity and colour should be taken in consideration to eliminate luminance overload;
- externally illuminated signs should not be used.

© CIE 2007 — All rights reserved
© ISO 2007 — All rights reserved

Licensed to Pattaraporn Sritrakool. ANSI order X_271503. Downloaded 4/23/2012 7:29 AM. Single user license only. Copying and networking prohibited.

12. ANNEX (INFORMATIVE): BIBLIOGRAPHY

BOYCE, P. R., 1985. Movement Under Emergency Lighting: Effect of Illuminance. *Lighting Research & Technology*, **17 (2)**, 51-71, 1985.

CIE, 1987. CIE 69-1987. *Methods of characterising illuminance meters and luminance meters: Performance, characteristics and specifications*, 1987.

CIE, 2005. CIE S 015/E:2005. *Lighting of outdoor work places*, 2005.

EHREISER, W. KOKOSCHKA, S. and WEIS, B., 1993. Untersuchung der Sichtbarkeit von Sicherheitszeichen für Rettungswege. *Licht,* **3,** 666-670, 1993.

JIN, T., 1971. Visibility through Fire Smoke, Part 2. *Bull. of the Fire Prevention Society of Japan*, **21 (1)**, 17-23, 1971.

JIN, T., 1997. Studies on Human Behavior and Tenability in Fire and Smoke. H.W. Emmons invited plenary lecture. *Proc. 5th int. symp. Fire Safety Science*, 3-21, 1997.

JIN, T., 2002. Visibility and Human Behaviour in Fire Smoke, in *SFPE Handbook of Fire Protection Engineering* 3rd edition, 2-42 - 2-53. ISBN 0877654514. National Fire Protection Association, Quincy, MA, USA, 2002.

OUELLETTE, M. J., 1988. Exit Signs in Smoke, Design Parameters for Greater Visibility. *Lighting Res. Technol.,* **20 (4)**, 155-160, 1988.

WEBBER, G., M., B. and HALLMANN, P. J., 1987. Emergency Lighting and Movement through Corridors and Stairways. *Proc. Ergonom. Soc Ann Conf Swansea*, 315, 1987.

WEIS, B., WILLING, A. and TERSTIEGE, H., 1994. Notbeleuchtung kontra langnachleuchtende Farben. *Licht*, **46** (**1)**, 52-58, 1994.

WEIS, B., 1985. *Notbeleuchtung,* 1-191. ISBN 3-7905-0434-3. Pflaum Verlag, München, Heidelberg, 1985.

Copies of CIE Publications are available from the National Committees of most CIE member countries, or from the CIE webshop (www.cie.co.at).

CIE Central Bureau
Kegelgasse 27
A-1030 Vienna
Austria
Tel.: +43 1 714 3187 0
Fax: +43 1 714 3187 18
e-mail: ciecb@ping.at
WWW: http://www.cie.co.at/

© CIE 2007 — All rights reserved
© ISO 2007 — All rights reserved

Licensed to Pattaraporn Sritrakool. ANSI order X_271503. Downloaded 4/23/2012 7:29 AM. Single user license only. Copying and networking prohibited.

Licensed to Pattaraporn Sritrakool. ANSI order X_271503. Downloaded 4/23/2012 7:29 AM. Single user license only. Copying and networking prohibited.

ICS 91.160.10

Price based on 8 pages

© ISO 2007 — All rights reserved

Licensed to Pattaraporn Sritrakool. ANSI order X_271503. Downloaded 4/23/2012 7:29 AM. Single user license only. Copying and networking prohibited.