TECHNICAL REPORT

ISO/IEC TR 9578

First edition
1990-11-15

Information technology — Communication interface connectors used in local area networks

Technologies de l'information — Connecteurs d'interface de communication utilisés dans les réseaux locaux

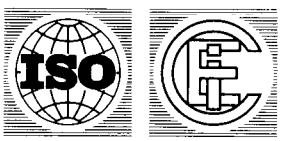

Reference number
ISO/IEC TR 9578 : 1990 (E)

Copyright International Organization for Standardization
Provided by IHS under license with ISO
No reproduction or networking permitted without license from IHS

Not for Resale

Contents

Foreword ... iii

Introduction ... iv

1 Scope ... 1

2 Normative ... 2

3 Reference interface details ... 4

3.1 Copper wire/twisted pair ... 4

3.1.1 D subminiature connectors ... 4

3.1.2 Medium interface connectors (MIC) ... 12

3.1.3 8-pole connector (modular jack and plug) ... 17

3.2 Coaxial media ... 20

3.2.1 BNC-type connectors ... 20

3.2.2 N-type connectors ... 23

3.2.3 F-type connectors ... 26

3.2.4 TNC-type connectors ... 29

3.2.5 TWINAX-type connectors ... 32

3.2.6 Coaxial taps (for reference only) ... 35

3.3 Fibre optic media ... 37

3.3.1 FSMA-type connectors ... 37

3.3.2 Duplex connectors ... 40

4 LAN connector survey ... 42

© ISO/IEC 1990
All rights reserved. No part of this publication may be reproduced or utilized in any form or by any means, electronic or mechanical, including photocopying and microfilm, without permission in writing from the publisher.

ISO/IEC Copyright Office • Case postale 56 • CH-1211 Genève 20 • Switzerland

Printed in Switzerland

Copyright International Organization for Standardization
Provided by IHS under license with ISO
No reproduction or networking permitted without license from IHS

Not for Resale

Foreword

ISO (the International Organization for Standardization) and IEC (the International Electrotechnical Commission) together form a system for worldwide standardization as a whole. National bodies that are members of ISO or IEC participate in the development of International Standards through technical committees established by the respective organization to deal with particular fields of technical activity. ISO and IEC technical committees collaborate in fields of mutual interest. Other international organizations, governmental and non-governmental, in liaison with ISO and IEC, also take part in the work.

In the field of information technology, ISO and IEC have established a joint technical committee, ISO/IEC JTC 1.

The main task of a technical committee is to prepare International Standards but in exceptional circumstances, the publication of a technical report of one of the following types may be proposed:

- type 1, when the necessary support within the technical committee cannot be obtained for the publication of an International Standard, despite repeated efforts;
- type 2, when the subject is still under technical development requiring wider exposure;
- type 3, when a technical committee has collected data of a different kind from that which is normally published as an International Standard ("state of the art", for example).

Technical reports of types 1 and 2 are subject to review within three years of publication, to decide whether they can be transformed into International Standards. Technical reports of type 3 do not necessarily have to be reviewed until data they provide are considered to be no longer valid or useful.

ISO/IEC TR 9578, which is a technical report of type 3, was prepared by ISO/IEC JTC 1, Information technology.

Copyright International Organization for Standardization
Provided by IHS under license with ISO
No reproduction or networking permitted without license from IHS
Not for Resale

Introduction

This Technical Report deals with connectors for communication systems.

For a number of years, communications interfaces defined by ISO have used interface connectors which had been or are being standardized by IEC.

This Technical Report briefly defines connectors that are primarily used in International Standards for local area networks, which may also be used in wide area networks and municipal area networks. It should be clearly understood that the data on connectors given in the International Standards merely provides reference information for particular applications. The final responsibility for connector standards lies with IEC.

This subject of connector standards has caused some misunderstanding in the past and it is hoped that this Technical Report will minimize the confusion as work proceeds on new open system interconnects related to local area networks. It should assist those not fully conversant with electrical connector technology to use the correct components in their systems.

The connectors described in this Technical Report are divided into three groups, according to the three transmission media currently defined for local area networks, that is to say copper wire/twisted pair, coaxial and fibre optic media, where the standards are available and appropriate.

Copyright International Organization for Standardization
Provided by IHS under license with ISO
No reproduction or networking permitted without license from IHS
Not for Resale

Information technology — Communication interface connectors used in local area networks

1 Scope

This Technical Report describes the physical layer connection device for local area networks. This device is sometimes referred to as the medium interface connector and is used between the terminal equipment and the trunk coupling unit for the trunk cable. The connectors described in this document were proposed by ISO/IEC JTC 1 SC 6, SC 13, SC 83, IEC TC 46, IEC TC 48, and IEC TC 86. This document focuses the work of all of these groups into one compendium which describes the physical devices which are currently available in the standards world.

Data transmission techniques can be divided into two basic classifications: baseband and broadband. They can be further defined by the speeds of the data transmission across the interface. To avoid undue complexity, no attempt is made to describe the cable or wire used in conjunction with the connectors that are described.

Copyright International Organization for Standardization
Provided by IHS under license with ISO
No reproduction or networking permitted without license from IHS Not for Resale

2 Normative references

The following standards contain provisions which, through reference in this text, constitute provisions of this Technical Report. At the time of publication, the editions indicated were valid. All standards are subject to revision, and parties to agreements based on this Technical Report are encouraged to investigate the possibility of applying the most recent editions of the standards listed below. Members of IEC and ISO maintain registers of currently valid International Standards.

ISO 4903: 1980, Data communications - 15-pin DTE/DCE interface connector and pin assignments. First edition amendment slip 1981.

ISO 8802-3: 1989: Information processing systems - Local area networks - Part 3: Carrier sense multiple access with collision detection.

ISO 8802-4: - [1], Information processing systems - Local area networks - Part 4: Token-passing bus access method and physical layer specification.

ISO 8802-5: - [1], Information processing systems - Local area networks - Part 5: Token ring access method and physical layer specification.

ISO 8802-7: - [1], Information processing systems - Local area networks - Part 7: Slotted ring access method and physical layer specification.

ISO 8877: 1987: Information processing systems - Interface connector and contact assignments for ISDN - Basic access interface located at reference points S and T.

ISO 9314-1: - [1], Information processing systems - Fibre distributed data interface (FDDI) - Part 1: Physical layer protocol (PHY).

ISO 9314-2: - [1], Information processing systems - Fibre distributed data interface (FDDI) - Part 2: Media access control (MAC).

ISO 9314-3: - [1], Information processing systems - Fibre distributed data interface (FDDI) - Part 3: Physical layer medium dependent (PMD).

IEC 48B(CO)189: - [1], Detail specification for connectors four signal and earthing contacts for cable screen.

IEC 83(Sec.)54: - [1], Medium attachment unit and baseband medium specification for a vendor independent fibre optic layer repeater link.

IEC 169-8: 1978, Part 8: R.F. coaxial connectors with inner diameter of outer conductor 6,5 mm (0,256 in) with bayonet lock - Characteristic impedance 50 ohms (Type BNC).

---

[1] To be published.

Copyright International Organization for Standardization
Provided by IHS under license with ISO
No reproduction or networking permitted without license from IHS
Not for Resale

IEC 169-16: 1982, Part 16: R.F. coaxial connectors with inner diameter of outer conductor 7 mm (0,276 in) with screw coupling - Characteristic impedance 50 ohms (75 ohms) (Type N).

IEC 169-17: 1980, Part 17: R.F. coaxial connectors with inner diameter of outer conductor 6,5 mm (0,256 in) with screw coupling - Characteristic impedance 50 ohms (Type TNC).

IEC 169-24: - [1], Part 24: Radio-frequency connectors - Radio-frequency coaxial connectors with screw coupling, typically for use in 75 ohms cable distribution systems (Type F).

IEC 169-25: - [1], Part 25: Radio-frequency connectors - Two-pole screw (3/4-20 UNEF) coupled connectors for use with shield balanced cables having twin inner conductors with inner diameter of outer conductor: 13,56 mm (0,534 in).

IEC 607-3: 1990, Part 7: Detail specification for connectors, 8 way, including fixed and free connectors with common mating features.

IEC 807-2: 1985, Part 2: Detail specification for a range of connectors with round contacts. Fixed solder contact types.

IEC 807-3: 1990, Part 3: Detail specification for a range of connectors with trapezoidal shaped metal shells and round contacts, removable crimp contact types with closed crimp barrels, rear insertion/rear release.

IEC 874-2: - [1], Connector for optical fibers and cables. Part 2: Fibre optic connector type F-SMA.

CCITT Recommendation I.430: 1984, Basic user network interface - Layer 1 specification.

CCITT Recommendation I.431: 1984, Primary rate user network interface - Layer 1 specification.

---

[1] To be published.

Copyright International Organization for Standardization
Provided by IHS under license with ISO
No reproduction or networking permitted without license from IHS
Not for Resale

3 Reference interface details

3.1 Copper wire/twisted pair media

3.1.1 D subminiature connectors

D subminiature connectors for use in local area network systems shall conform to the requirements of IEC 807-2 and/or 807-3. The mating face drawings and contact arrangements are included here for information.

Performance

Working voltage: 25 V d.c. or a.c. peak

Insulation resistance: 5 GΩ min.

Contact resistance: 10 mΩ max.

Application

ISO 8802-3
ISO 8802-7

Copyright International Organization for Standardization
Provided by IHS under license with ISO
No reproduction or networking permitted without license from IHS
Not for Resale

Mating face dimensions and contact arrangements

3.1.1.1 ***Contact arrangements, face view of connector with male contacts or rear view of connector with female contacts.*** ***(For complete details see IEC 807-2 and/or IEC 807-3.)***

Shell size	Number of contacts	Connector with male contacts
1	9	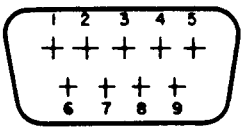
2	15	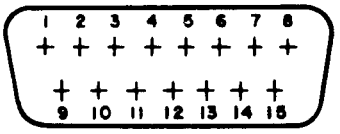
3	25	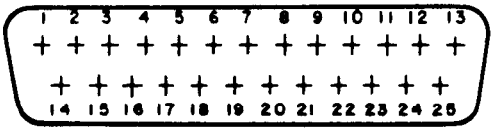
4	37	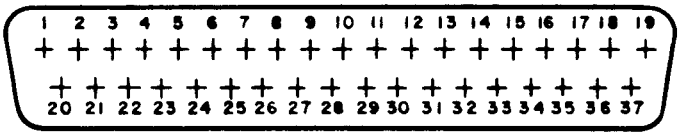
5	50	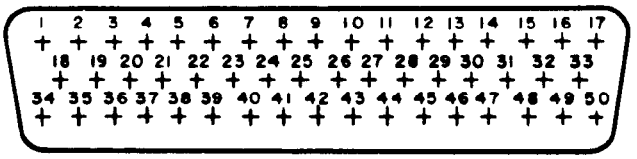

Copyright International Organization for Standardization
Provided by IHS under license with ISO
No reproduction or networking permitted without license from IHS
Not for Resale

3.1.1.2 Outline dimensions of connector with male contacts.

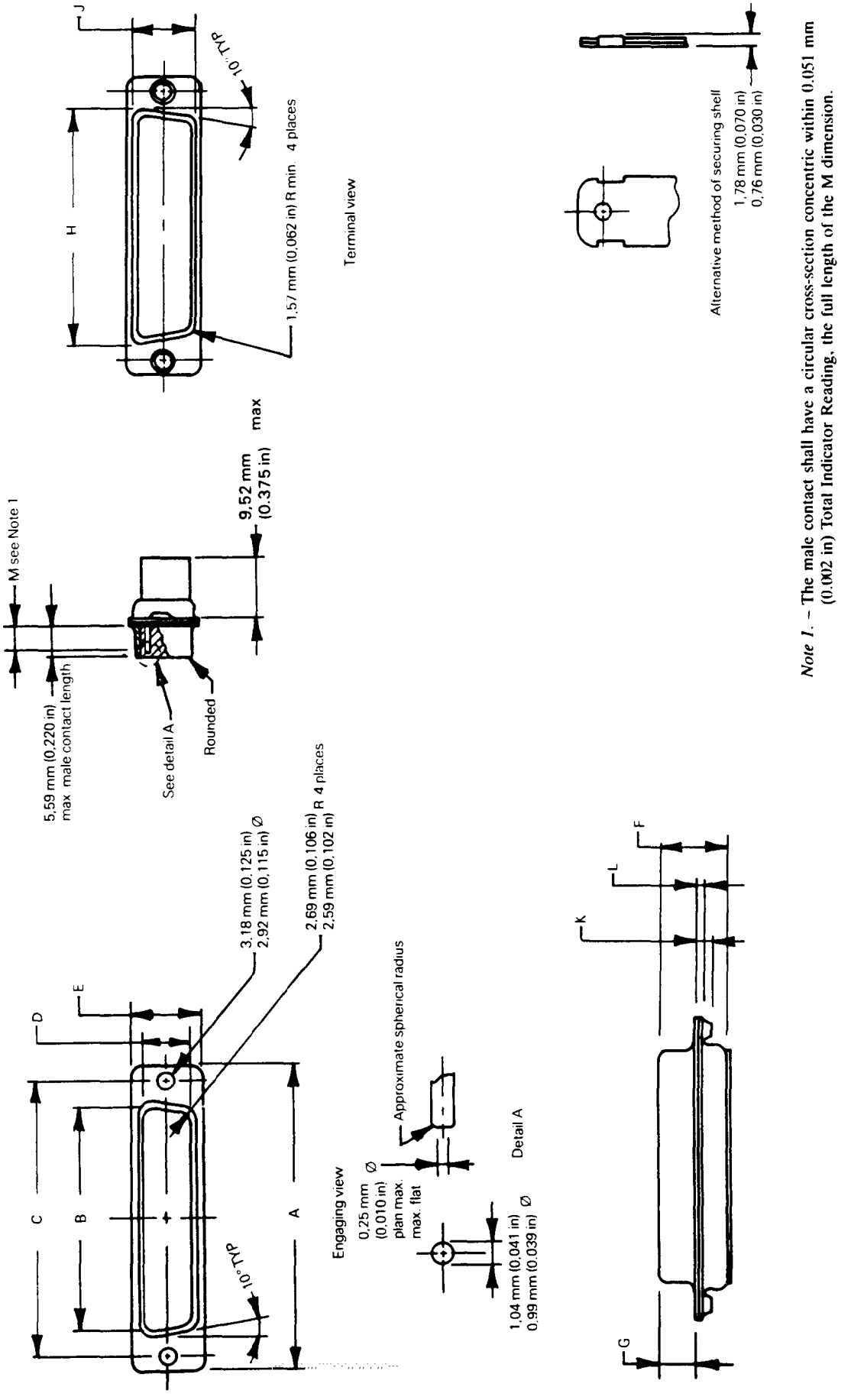

Note 1. – The male contact shall have a circular cross-section concentric within 0,051 mm (0.002 in) Total Indicator Reading, the full length of the M dimension.

Copyright International Organization for Standardization
Provided by IHS under license with ISO
No reproduction or networking permitted without license from IHS
Not for Resale

Outline dimensions of connectors with male contacts (for reference only).

Shell size	Number of contacts	A		B		C		D		E		F	
		mm	in	mm	in	mm	in	mm	in	mm	in	mm	in
1	9	31,19 30,43	1.228 1.198	17,04 16,79	0.671 0.661	25,12 24,87	0.989 0.979	8,48 8,23	0.334 0.324	12,93 12,17	0.509 0.479	10,97 10,46	0.432 0.412
2	15	39,52 38,76	1.556 1.526	25,37 25,12	0.999 0.989	33,45 33,20	1.317 1.307	8,48 8,23	0.334 0.324	12,93 12,17	0.509 0.479	10,97 10,46	0.432 0.412
3	25	53,42 52,65	2.103 2.073	39,09 38,84	1.539 1.529	47,17 46,91	1.857 1.847	8,48 8,23	0.334 0.324	12,93 12,17	0.509 0.479	11,07 10,57	0.435 0.416
4	37	69,70 68,94	2.744 2.714	55,55 55,30	2.187 2.177	63,63 63,37	2.505 2.495	8,48 8,23	0.334 0.324	12,93 12,17	0.509 0.479	11,07 10,57	0.436 0.416
5	50	67,31 66,55	2.650 2.620	52,93 52,68	2.084 2.074	61,24 60,99	2.411 2.401	11,33 11,07	0.446 0.436	15,75 14,99	0.620 0.590	11,07 10,57	0.436 0.416

Shell size	Number of contacts	G		H		J		K		L		M	
		mm	in	mm	in	mm	in	mm	in	mm	in	mm	in
1	9	6,05 5,82	0.238 0.229	19,53 19,02	0.769 0.749	10,97 10,46	0.432 0.412	1,78 max.	0.070 max.	1,02 0,51	0.040 0.020	4,04 min.	0.159 min.
2	15	6,05 5,82	0.238 0.229	27,76 27,25	1.093 1.073	10,97 10,46	0.432 0.412	1,78 max.	0.070 max.	1,02 0,51	0.040 0.020	4,04 min.	0.159 min.
3	25	5,99 5,69	0.236 0.224	41,53 41,02	1.635 1.615	10,97 10,46	0.432 0.412	1,78 max.	0.070 max.	1,24 0,74	0.049 0.029	3,81 min.	0.150 min.
4	37	5,99 5,69	0.236 0.224	57,96 57,45	2.282 2.262	10,97 10,46	0.432 0.412	1,78 max.	0.070 max.	1,24 0,74	0.049 0.029	3,81 min.	0.150 min.
5	50	5,99 5,69	0.236 0.224	55.58 55,07	2.188 2.168	13,82 13,31	0.544 0.524	1,78 max.	0.070 max.	1,24 0,74	0.049 0.029	3,81 min.	0.150 min.

Copyright International Organization for Standardization
Provided by IHS under license with ISO
No reproduction or networking permitted without license from IHS
Not for Resale

3.1.1.3 Outline dimensions of connector with female contacts.

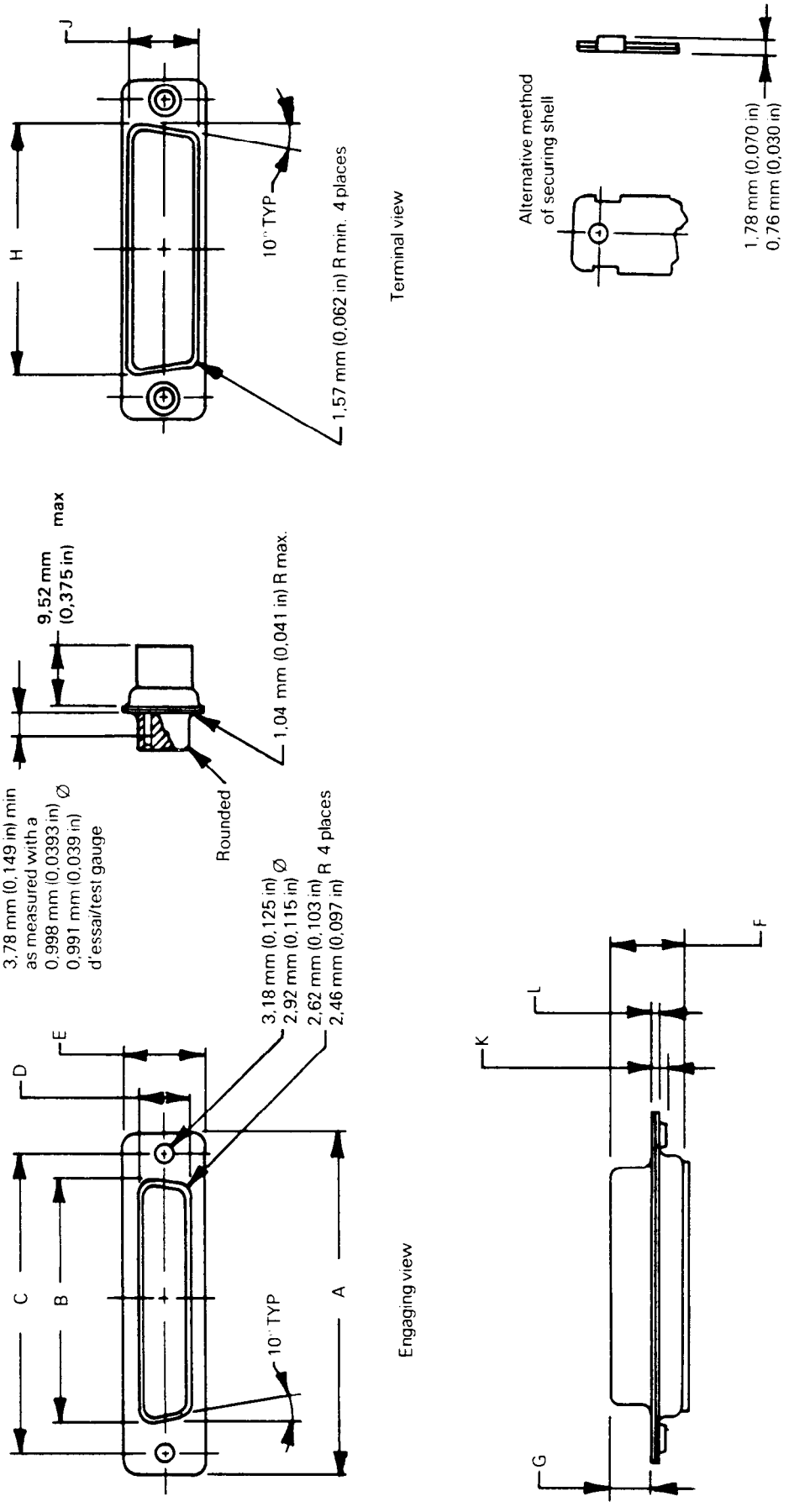

Copyright International Organization for Standardization
Provided by IHS under license with ISO
No reproduction or networking permitted without license from IHS
Not for Resale

Outline dimensions of connectors with female contacts (for reference only).

Shell size	Number of contacts	A		B		C		D		E		F	
		mm	in	mm	in	mm	in	mm	in	mm	in	mm	in
1	9	31,19 30,43	1.228 1.198	16,46 16,21	0.648 0.638	25,12 24,87	0.989 0.979	8,03 7,77	0.316 0.306	12,93 12,17	0.509 0.479	11,15 10,64	0.439 0.419
2	15	39,52 38,76	1.556 1.526	24,79 24,54	0.976 0.966	33,45 33,20	1.317 1.307	8,03 7,77	0.316 0.306	12,93 12,17	0.509 0.479	11,15 10,64	0.439 0.419
3	25	53,42 52,65	2.103 2.073	38,51 38,25	1.516 1.506	47,17 46,91	1.857 1.847	8,03 7,77	0.316 0.306	12,93 12,17	0.509 0.479	11,15 10,64	0.439 0.419
4	37	69,70 68,94	2.744 2.714	54,97 54,71	2.164 2.154	63,63 63,37	2.505 2.495	8,03 7,77	0.316 0.306	12,93 12,17	0.509 0.479	11,15 10,64	0.439 0.419
5	50	67,31 66,55	2.650 2.620	52,55 52,30	2.069 2.059	61,24 60,99	2.411 2.401	10,87 10,62	0.428 0.418	15,75 14,99	0.620 0.590	11,15 10,64	0.439 0.419

Shell size	Number of contacts	G		H		J		K		L	
		mm	in	mm	in	mm	in	mm	in	mm	in
1	9	6,30 6,05	0.248 0.238	19,53 19,02	0.769 0.749	10,97 10,46	0.432 0.412	1,78 max.	0.070 max.	1,02 0,51	0.040 0.020
2	15	6,30 6,05	0.248 0.238	27,76 27,25	1.093 1.073	10,97 10,46	0.432 0.412	1,78 max.	0.070 max.	1,02 0,51	0.040 0.020
3	25	6,30 6,05	0.248 0.238	41,53 41,02	1.635 1.615	10,97 10,46	0.432 0.412	1,78 max.	0.070 max.	1,02 0,51	0.040 0.020
4	37	6,30 6,05	0.248 0.238	57,96 57,45	2.282 2.262	10,97 10,46	0.432 0.412	1,78 max.	0.070 max.	1,02 0,51	0.040 0.020
5	50	6,30 6,05	0.248 0.238	55,58 55,07	2.188 2.168	13,82 13,31	0.544 0.524	1,78 max.	0.070 max.	1,02 0,51	0.040 0.020

Copyright International Organization for Standardization
Provided by IHS under license with ISO
No reproduction or networking permitted without license from IHS

Not for Resale

3.1.1.4 15-pole connectors for CSMA/CD systems.

ISO 8802-3 specifies that there shall be multiple contact points around the sides of the male front shell to provide shield continuity not greater that 5 milliohms. All female connectors shall have the slide latch and all male connectors shall have the locking posts

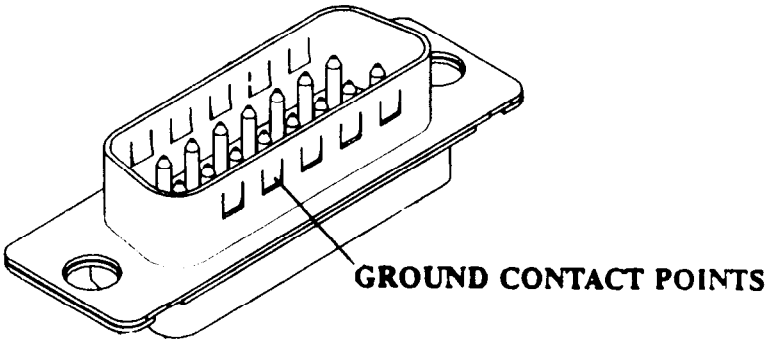

3.1.1.5 Accessories - covers and locking devices.

a) Slide lock - as specified for CSMA/CD systems. This consists of two halves:

1) Sliding plate
2) Locking posts

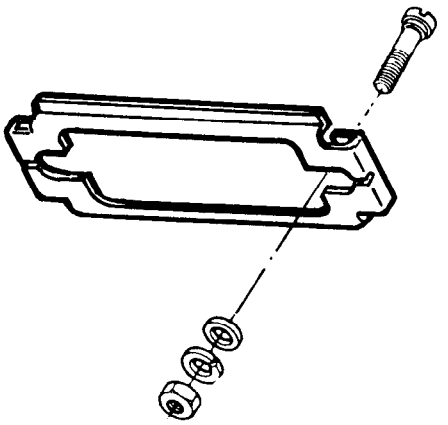

b) Jack screws - It may not be possible to use jack screws with certain connector housing designs.

Copyright International Organization for Standardization
Provided by IHS under license with ISO
No reproduction or networking permitted without license from IHS
Not for Resale

c) Connector housing - A variety of connector housings are available to protect the wiring termination at the back of the free connector manufactured from sheet metal, die-cast alloy, or moulded plastic. Many designs offer electromagnetic interference shielding to enable equipment using them to comply with various specifications requiring immunity from interference.

A number of manufacturers supply ready-made cable assemblies which have the connectors moulded on to the cable. Such assemblies may also offer electromagnetic shielding.

The style of connector housing is dependent on the particular application and no attempt has been made to recommend a standard.

System designers may consult connector manufacturers for advice on suitable items.

Copyright International Organization for Standardization
Provided by IHS under license with ISO
No reproduction or networking permitted without license from IHS
Not for Resale

3.1.2 Medium interface connectors (MIC)

MIC connectors for use in local area network systems shall conform to the requirements of ISO 8802-5. The mating face drawings are included here for information. A new work item is approved in IEC SC 48B to produce a connector standard. (See 48B (CO) 189.)

This connector has four signal contacts and a ground contact and is hermaphroditic in design so that two identical units will mate when orientated 180° with respect to each other.

It also has a self-shorting feature which connects contact B to contact G and contact O to contact R before mating.

Performance

Working voltage: 30 V a.c. at 1 A max.

Insulation resistance: 1 000 MΩ min.

Contact resistance not to exceed:

Unmated:	40 mΩ average
Mated:	20 mΩ average
Screen:	25 mΩ average

Maximum of 100 mΩ individual measurement

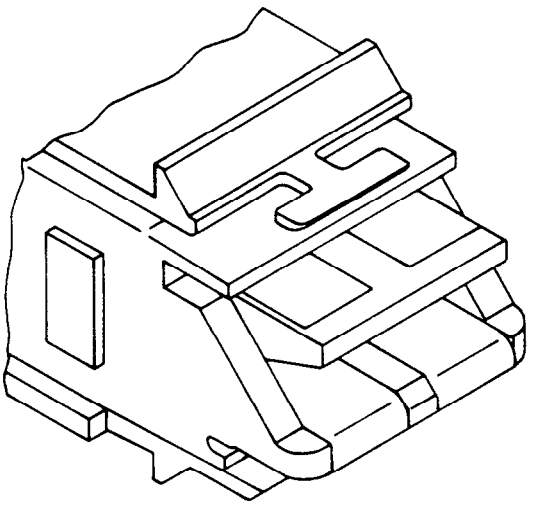

Isometric view of one MIC connector

Copyright International Organization for Standardization
Provided by IHS under license with ISO
No reproduction or networking permitted without license from IHS
Not for Resale

3.1.2.1 Mating face dimensions

Only dimensions essential to mating are shown.

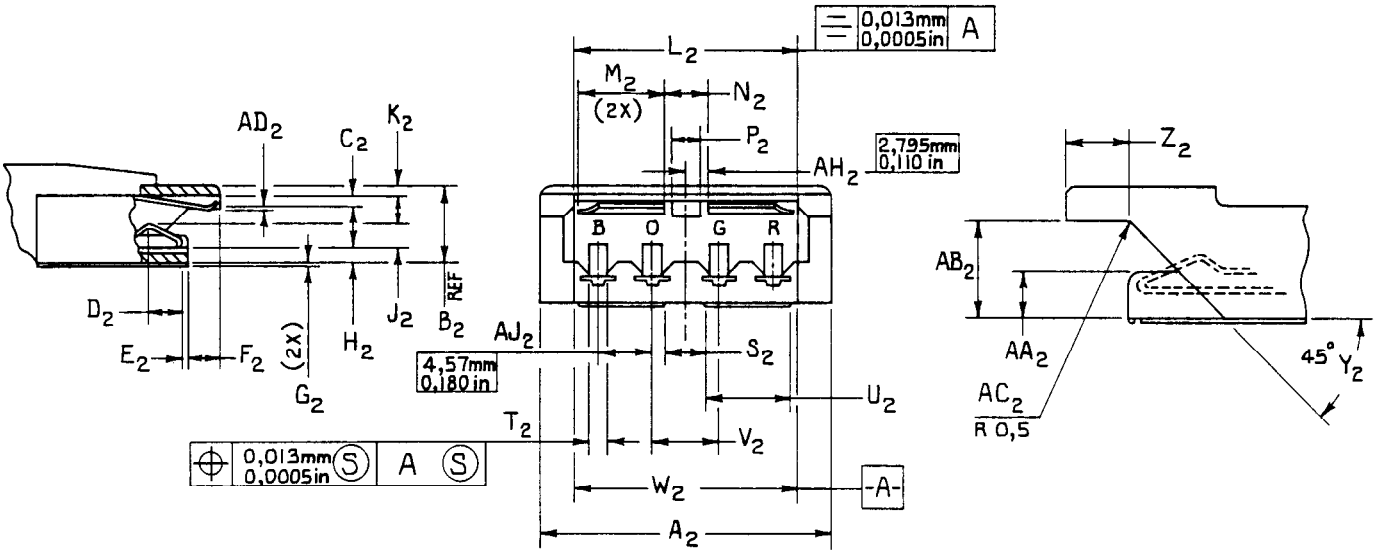

All drawings in third angle projections.

Tolerance shall be as stated in table.

Hermaphroditic connector - mating details, mating face dimensions

Copyright International Organization for Standardization
Provided by IHS under license with ISO
No reproduction or networking permitted without license from IHS
Not for Resale

Mating face dimensions

LTR	MAX		MIN		NOM (REF)	
	mm	in	mm	in	mm	in
A_1	25,96	1,022	25,45	1,002	-	-
B_1	-	-	-	-	9,82	0,387
C_1	3,07	0,121	2,82	0,111	-	-
D_1	4,80	0,189	4,55	0,179	-	-
E_1	0,86	0,034	0,61	0,024	-	-
F_1	4,32	0,170	4,06	0,160	-	-
G_1	0,48	0,019	0,33	0,013	-	-
H_1	1,65	0,065	1,40	0,055	-	-
J_1	3,25	0,128	3,00	0,118	-	-
K_1	1,42	0,056	1,17	0,046	-	-
L_1	19,02	0,749	18,87	0,743	-	-
M_1	7,49	0,295	7,24	0,285	-	-
N_1	3,56	0,140	3,30	0,130	-	-
P_1	2,51	0,099	2,26	0,089	-	-
S_1	3,56	0,140	3,30	0,130	-	-
T_1	1,96	0,077	1,88	0,074	-	-
U_1	7,29	0,287	7,04	0,277	-	-
V_1	5,66	0,223	5,51	0,217	-	-
W_1	18,87	0,743	18,72	0,737	-	-
Y_1	-	-	-	-	45°	
Z_1	3,89	0,153	3,38	0,133	-	-
AA_1	3,68	0,145	3,43	0,135	-	-
AB_1	7,42	0,292	7,16	0,282	-	-
AC_1	0,64	0,025	0,38	0,015	-	-
AD_1	1,68	0,066	1,42	0,056	-	-
AE_1	12,24	0,482	11,99	0,472	-	-
AG_1	0,48	0,019	0,33	0,013	-	-
AH_1	-	-	-	-	2,795*	0,110*
AJ_1	-	-	-	-	4,57*	0,180*

* indicates true position.

Copyright International Organization for Standardization
Provided by IHS under license with ISO
No reproduction or networking permitted without license from IHS
Not for Resale

3.1.2.2 Locking mechanism dimensions

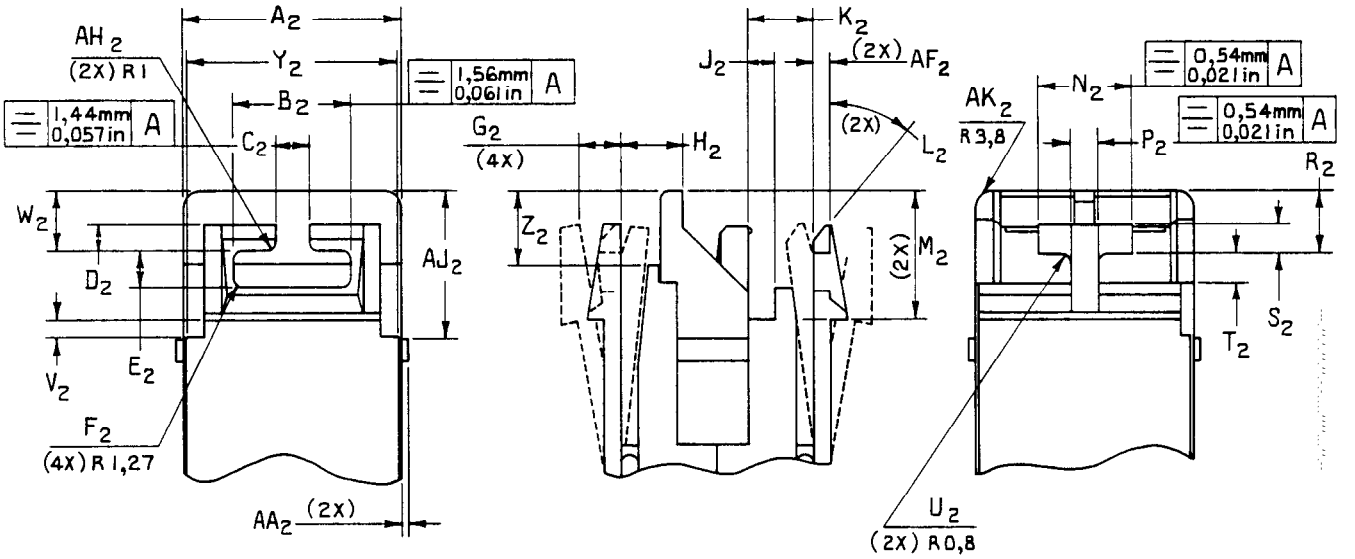

Tolerance shall be as stated in table

Hermaphroditic connector

Copyright International Organization for Standardization
Provided by IHS under license with ISO
No reproduction or networking permitted without license from IHS
Not for Resale

Locking mechanism dimensions

LTR	MAX		MIN		NOM (REF)	
	mm	in	mm	in	mm	in
A_2	24,71	0,973	24,46	0,963	-	-
B_2	13,44	0,529	13,18	0,519	-	-
C_2	3,94	0,155	3,68	0,145	-	-
D_2	3,05	0,120	2,79	0,110	-	-
E_2	4,19	0,165	3,94	0,155	-	-
F_2	1,40	0,055	1,14	0,045	-	-
G_2	-	-	2,49	0,098	-	-
H_2	7,59	0,299	6,60	0,260	-	-
J_2	3,30	0,130	2,31	0,091	-	-
K_2	7,85	0,309	6,35	0,250	-	-
L_2	-	-	-	-	40°	
M_2	15,39	0,606	14,60	0,575	-	-
N_2	10,67	0,420	10,41	0,410	-	-
P_2	3,18	0,125	2,92	0,115	-	-
R_2	8,10	0,319	6,90	0,272	-	-
S_2	3,43	0,135	3,18	0,125	-	-
T_2	3,43	0,135	3,18	0,125	-	-
U_2	0,94	0,037	0,66	0,026	-	-
V_2	1,88	0,074	1,63	0,064	-	-
W_2	7,06	0,278	5,84	0,230	-	-
Y_2	24,08	0,948	23,57	0,928	-	-
Z_2	8,28	0,326	7,70	0,303	-	-
AA_2	0,91	0,036	0,66	0,026	-	-
AF_2	2,16	0,085	1,90	0,075	-	
AH_2	1,12	0,044	0,86	0,034	-	
AJ_2	16,99	0,669	16,74	0,659	-	
AK_2	3,94	0,155	3,68	0,145	-	

Copyright International Organization for Standardization
Provided by IHS under license with ISO
No reproduction or networking permitted without license from IHS
Not for Resale

3.1.3 8-pole connector (modular jack and plug)

Connectors for use in local area network systems shall conform to the requirements of ISO 8877 and IEC 603-7. The mating face drawings are included here for information.

Performance

Working voltage: < 60 V a.c. max. at < 250 mA

Insulation resistance: 500 MΩ

Contact resistance: 20 mΩ initial
40 mΩ after endurance

Pictoral representations

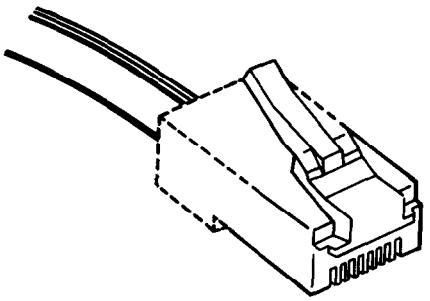

8-pole plug

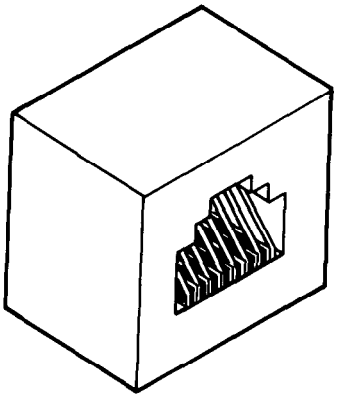

8-pole jack

Applications

ISO-8802-3 DAD 4

Copyright International Organization for Standardization
Provided by IHS under license with ISO
No reproduction or networking permitted without license from IHS
Not for Resale

Mating face dimensions

3.1.3.1 Plug - 8-pole

[Reference ISO 8877 and IEC 603-7]

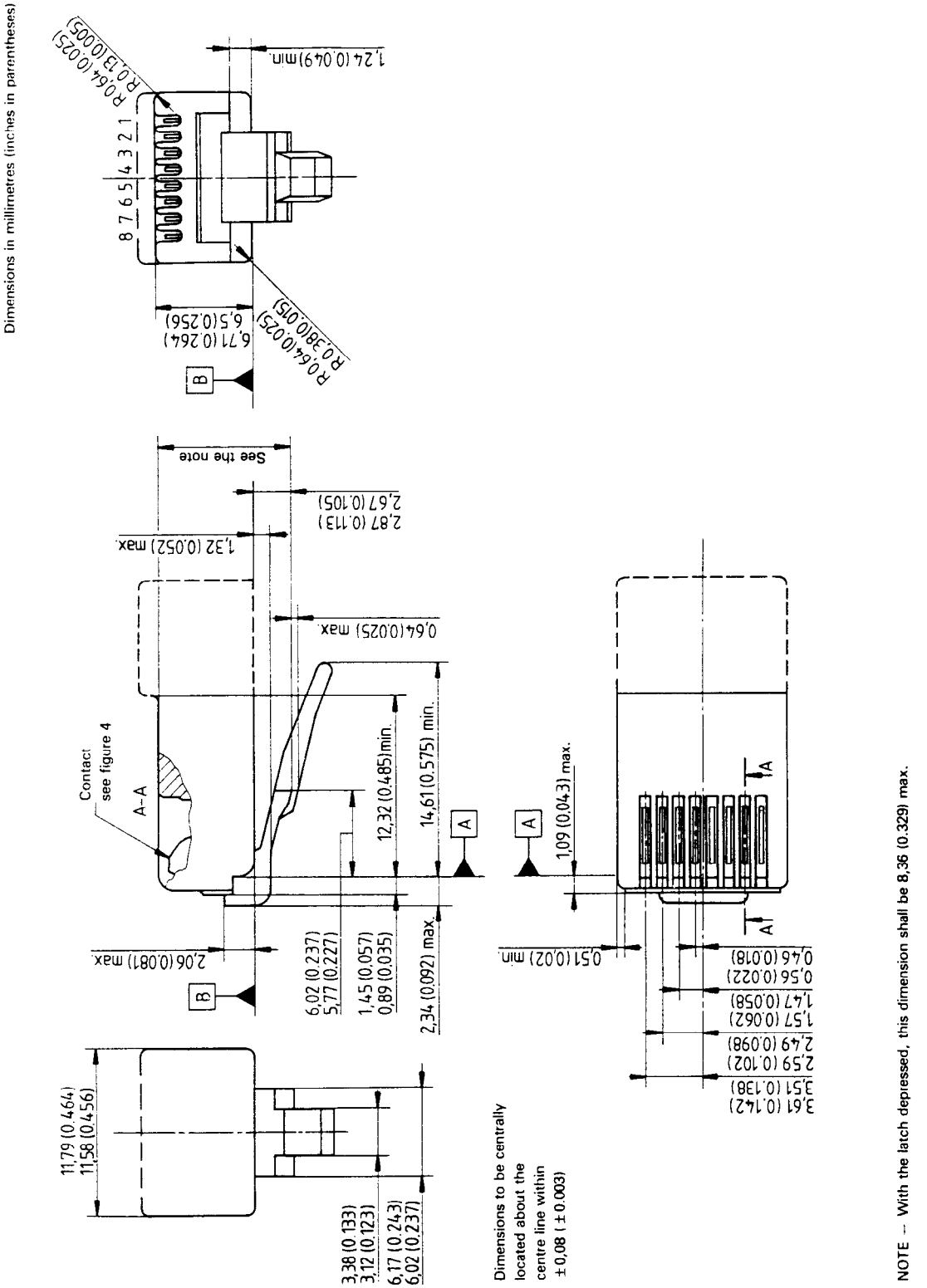

Copyright International Organization for Standardization
Provided by IHS under license with ISO
No reproduction or networking permitted without license from IHS
Not for Resale

3.1.3.2 Jack - 8-pole

[Reference ISO 8877 and IEC 603-7]

(May be fabricated with less than a full complement of contacts.)

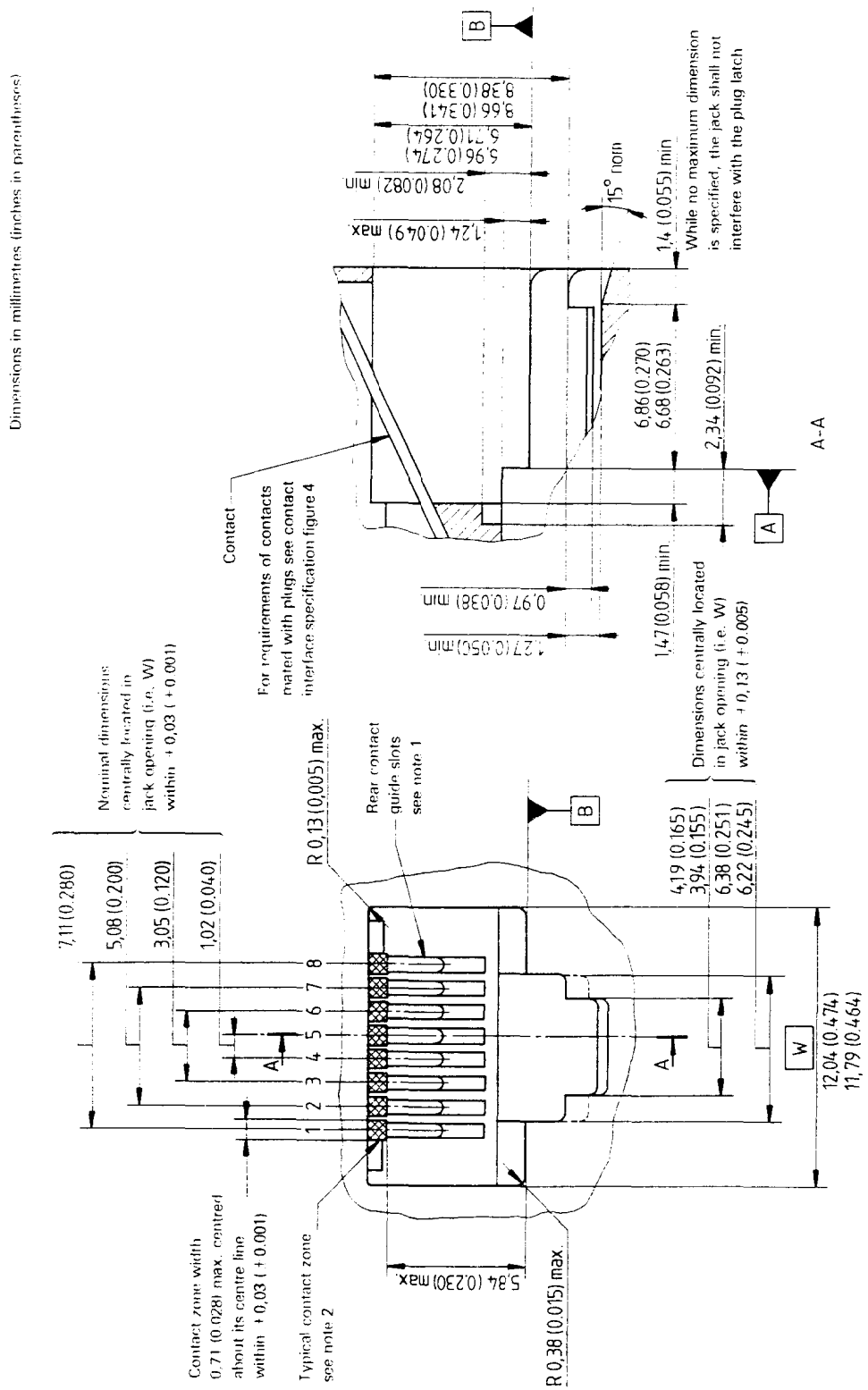

NOTES

1 Guide slots shall prevent any individual contact from being displaced from its associated slot while permitting movement within individual slots.

2 Jack contacts shall be within their individual contact zone to ensure proper mating as a plug is inserted.

Not for Resale
Copyright International Organization for Standardization
Provided by IHS under license with ISO
No reproduction or networking permitted without license from IHS

3.2 Coaxial media

3.2.1 BNC-type connectors

BNC-series connectors for use in local area network systems shall conform to the requirements for general purpose connectors - grade 2, as specified in IEC 169-8 (75 Ω connectors are included in the addendum to IEC 169-8). The mating face drawings are included here for information.

75 Ω BNC connectors use the same mating face dimensions as the general purpose grade 2 connectors and hence avoid destructive mating. Sometimes, however, modification is made to the dielectric at the mating face to achieve a closer impedance match. Electrical compensation is usually included at the cable interface.

Generally, connectors having silver-plated centre contacts and nickel-plated bodies should be used in local area network systems. Gold-plated centre contacts should be used in severe environments.

Performance

Characteristic impedance: 50 Ω

Working voltage: 500 V a.c. rms

Reflection factor: 0,13 max. to 3 GHz

Centre contact resistance: 20 mΩ max.

Outer conductor resistance: 5 mΩ max.

Applications

ISO 8802-4
ISO 8802-3

Copyright International Organization for Standardization
Provided by IHS under license with ISO
No reproduction or networking permitted without license from IHS
Not for Resale

Mating face dimensions

3.2.1.1 BNC-type pin connector
(Reference IEC 169-8)

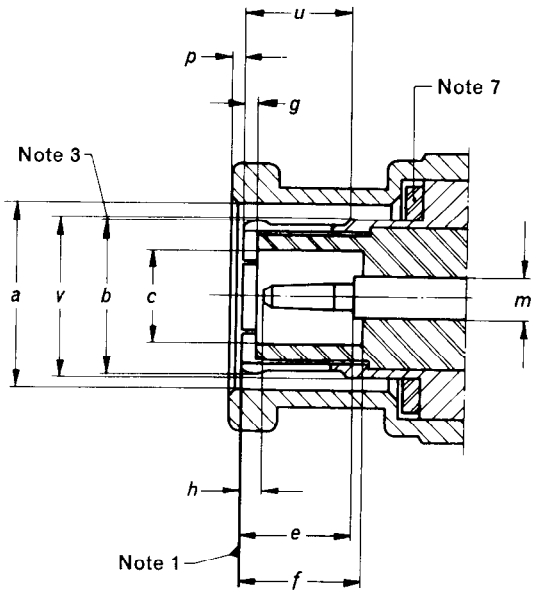

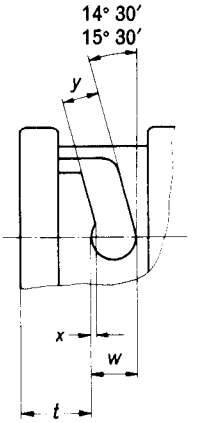

Details of bayonet lock

REF.	mm		in		NOTES
	Min.	Max.	Min.	Max.	
a	9,78	9,91	0,385	0,390	9/diam.
b	-	-	-	-	3/9/diam.
c	4,83	-	0,190	-	9/diam.
d	1,32	1,37	0,052	0,054	9/diam.
e	5,33	-	0,210	-	
f	5,28	-	0,280	-	
g	0,15	-	0,006	-	
h	0,35	-	0,014	-	
m	2,140 nom.		0,0842 nom.		diam.
p	1,44 nom.		0,057 nom.		10
t	4,57	4,67	0,180	0,184	
u	5,38	-	0,212	-	
v	-	8,18	-	0,322	9/diam.
w	3,15	-	0,124	-	
x	0,046	0,056	0,018	0,022	
y	2,13	-	0,019	-	

NOTES:

1 Mechanical and electrical reference plane.

3 Slotted and flared to meet gauge test.

7 Sealing gasket to meet required electrical and environmental performance.

9 Diameters shall be gauged to ensure that on MMC each feature can take up a common axis.

10 This dimension shows the position when the bayonet sleeve is locked.

Copyright International Organization for Standardization
Provided by IHS under license with ISO
No reproduction or networking permitted without license from IHS
Not for Resale

3.2.1.2 BNC-type socket connector
(Reference IEC 169-8)

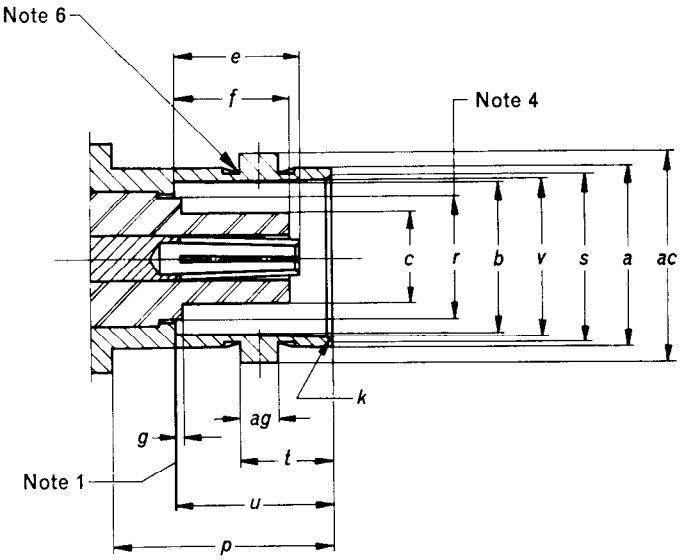

REF.	mm		in		NOTES
	Min.	Max.	Min.	Max.	
a	9,60	9,70	0,378	0,382	9/diam.
b	8,10	8,15	0,319	0,321	9/diam.
c	-	4,72	-	0,186	9/diam.
d	-	-	-	-	
e	4,55	5,23	0,179	0,206	
f	-	5,28	-	2,208	
g	-	0,15	-	0,006	
h	4,95	-	9,195	-	
k	-	-	-	-	8
m	2,140 nom.		0,0842 nom.		diam.
p	10,52	-	0,414	-	
r	-	6,50	-	0,256	4/diam.
s	8,79	9,04	0,346	0,356	diam.
t	5,18	5,28	0,204	0,208	
u	8,31	8,51	0,327	0,335	9/diam.
v	8,316	8,46	0,327	0,333	9/diam.
ac	10,97	11,07	0,432	0,436	9
ag	1,91	2,056	0,075	0,081	diam.

NOTES:

1 Mechanical and electrical reference plane.

4 Applied only when dielectric extends beyond reference plane.

6 A concave depression between the studs is permissible.

8 Chamfer or radius.

9 Diameters shall be gauged to ensure that on MMC each feature can take up a common axis.

Copyright International Organization for Standardization
Provided by IHS under license with ISO
No reproduction or networking permitted without license from IHS
Not for Resale

3.2.2 N-type connectors

Type N connectors for use in local area network systems shall conform to the requirements for general purpose connectors - grade 2, as specified in IEC 169-16. The mating face drawings are included here for information.

Mixed use of grade 2 with 75 Ω Type N connectors is not recommended due to problems of intermateability (see IEC 169-16, appendix A) which can result in destructive mating.

Only connectors having gold-plated centre contacts and nickel-plated bodies should be used in local area network systems designed to conform to ISO 8802-3 CSMA/CD.

Performance

Characteristic impedance: 50 Ω

Working voltage: 1 000 V a.c. rms

Reflection factor: 0,13 max. to 11 GHz

Centre contact resistance: 5 mΩ max.

Outer conductor resistance: 5 mΩ max.

Application

ISO 8802-3

Copyright International Organization for Standardization
Provided by IHS under license with ISO
No reproduction or networking permitted without license from IHS
Not for Resale

3.2.2.1 N-type pin connector
(Reference IEC 169-16)

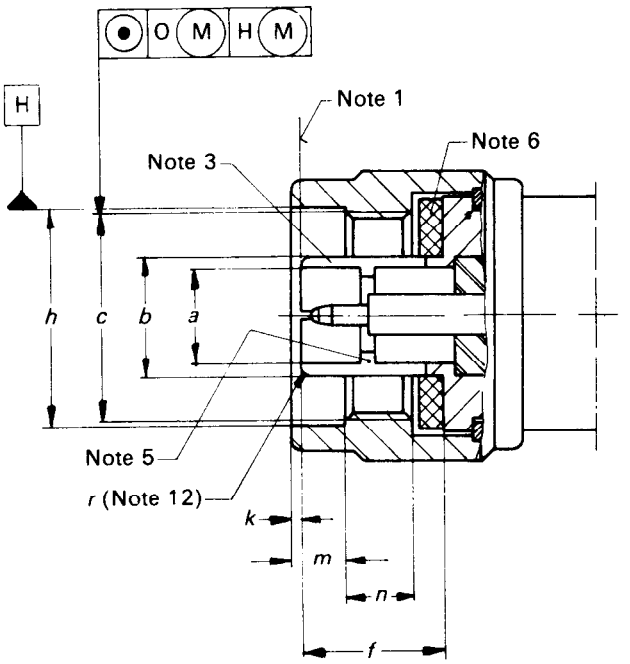

REF.	mm		in		NOTES
	Min.	Max.	Min.	Max.	
a	7,00 nom		0,2756 nom.		2/diam.
b	-	8,027	-	0,316	3/14/diam.
c	-	-	5/8-24 UNEF 2B		4
d	3,04 nom.		0,120 nom.		2/diam.
e	5,33	-	0,210	-	
f	9,25	-	0,364	-	6
g	0,0	-	0,0	0,062	
h	16,0	-	0,016	-	14/diam.
k	0,41	1,52	0,016	0,060	
m	4,0113	4,267	0,158	0,168	
n	4,5	-	0,177	-	
p	1,600	1,676	0,063	0,066	14/diam.
q	-	0,1	-	0,004	rad.
r	0,15	-	0,006	-	12
s	2,796	3,566	0,110	0,140	

NOTES:

1 Mechanical and electrical reference plane.

2 Diameter of outer centre contact to provide nominal (50Ω) characteristic impedance to meet requirements.

3 Slots optional.

4 According to ISO Standard 263.

5 Compensation for inductance of inner gap in mated pair of conductors optional.

6 Sealing gaskets.

12 Form optional.

14 Diameters shall be gauged to ensure that on MMC each feature can take up a common axis.

Copyright International Organization for Standardization
Provided by IHS under license with ISO
No reproduction or networking permitted without license from IHS
Not for Resale

3.2.2.2 N-type socket connector
(Reference IEC 169-16)

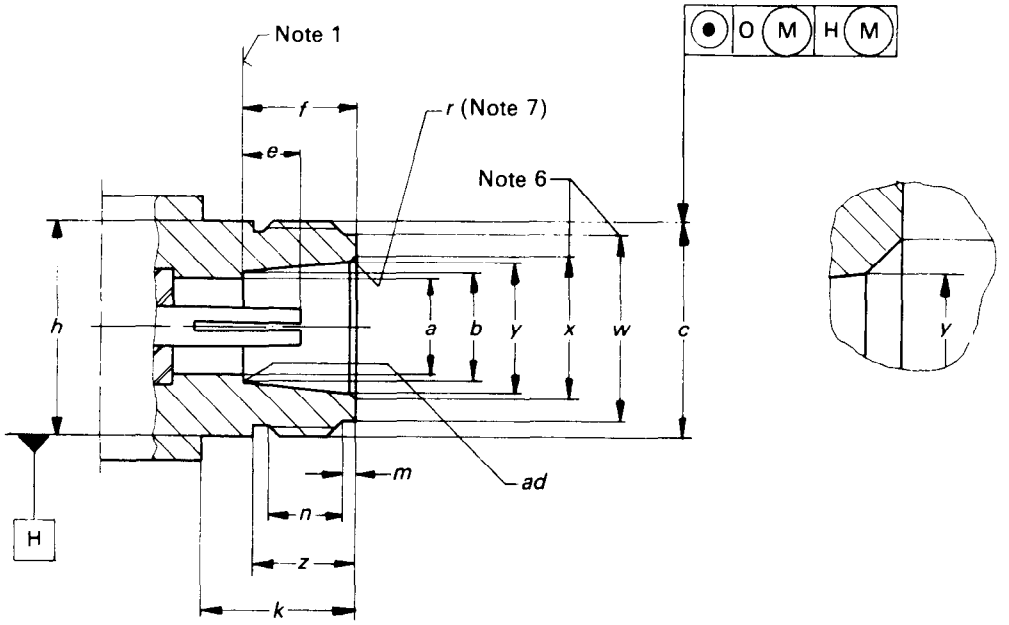

REF.	mm		in		NOTES
	Min.	Max.	Min.	Max.	
a	-	7,06	-	0,278	2/diam.
b	8,027	8,13	0,316	0,320	diam.
c	-	-	5/8-24	UNEF 2a	
d	3,04 nom.		0,120 nom.		2/diam.
e	4,75	5,26	0,187	0,207	
f	9,05	9,19	0,356	0,362	
h	-	15,93	-	0,627	diam.
k	10,72	-	0,422	-	
m	1,19	1,96	0,047	0,077	
n	4,37	-	0,172		13
p	-	-	-	-	diam.
r	-	1,2	-	0,047	
s	5,33	-	0,210	-	
w	-	-	-	-	
x	-	-	-	-	diam.
y	8,53	8,74	0,336	0,344	diam.
z	6,76	-	0,266	-	diam.
ad	-	0,13	-	0,005	rad.

NOTES:

1 Mechanical and electrical reference plane.

2 Diameter of outer and inner contact to provide nominal (50Ω) characteristic impedance to meet electrical requirements.

6 If sealing required, adequate pressure is applied to front face.

7 Radius only to ensure satisfactory sealing.

13 Applies to length of thread and not undercut.

Copyright International Organization for Standardization
Provided by IHS under license with ISO
No reproduction or networking permitted without license from IHS
Not for Resale

3.2.3 F-type connectors

F-type connectors for use in local area network systems shall conform to the requirements for general purpose connectors - grade 2, as specified in IEC 169-24. The mating face drawings are included here for information.

The user of F-type connectors should take note of caution - care should be taken when replacing larger diameter pin contacts (1,63 mm/0,064 in) with smaller diameter (0,5 mm/0,020 in) due to potential mechanical deformation in socket.

Performance

Characteristic impedance: Defined by limits of cable

Working voltage: Defined by limits of cable

Reflection factor: 0,13 max. to 500 MHz

Centre contact resistance: Defined by limits of cable

Outer conductor resistance: 5 mΩ max.

Applications

ISO 8802-4
ISO 8802-3/DAD 3

Copyright International Organization for Standardization
Provided by IHS under license with ISO
No reproduction or networking permitted without license from IHS
Not for Resale

Mating face dimensions

3.2.3.1 F-type pin connector
(Reference IEC 169-24)

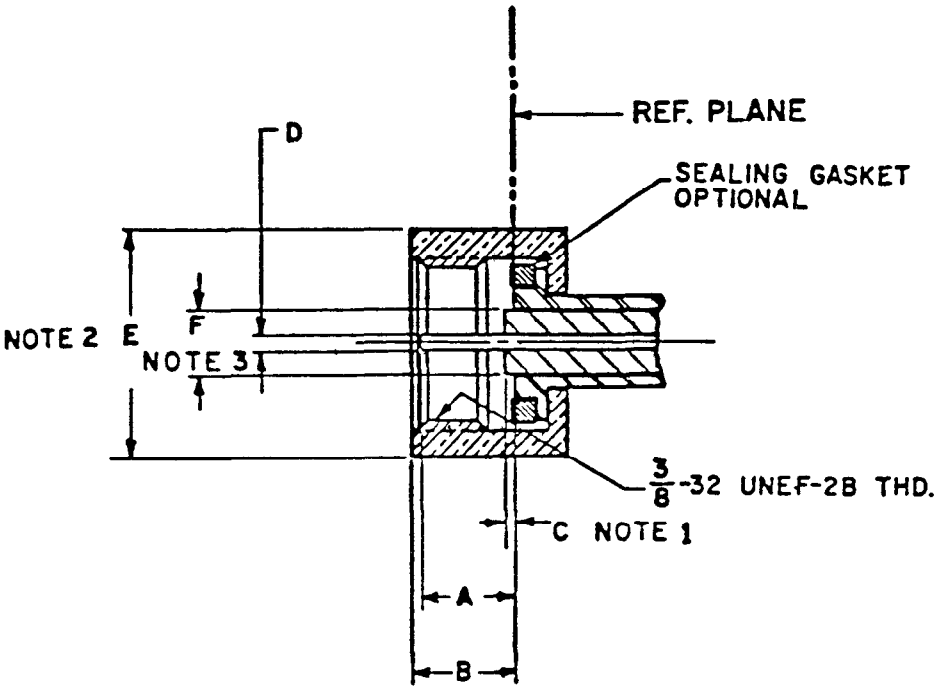

3.2.3.2 F-type socket connector
(Reference IEC 169-24)

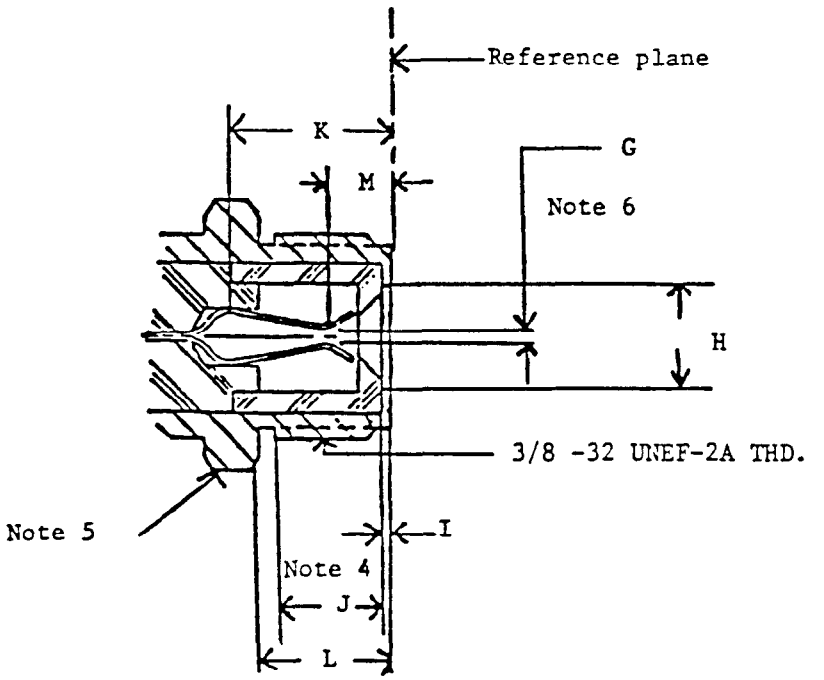

Copyright International Organization for Standardization
Provided by IHS under license with ISO
No reproduction or networking permitted without license from IHS
Not for Resale

F-type dimensions

REF.	mm		in		NOTES
	Min.	Max.	Min.	Max.	
a	4,95	6,86	0,195	0,270	
b	-	7,29	-	0,287	
c	-	0,25	-	0,010	1
d	0,51	1,63	0,020	0,064	
e	-	12,95	-	0,510	2/diam.
f	-	3,8	-	0,149	3/diam.
g	-	-	-	-	6/diam.
h	3,86	-	0,152	-	diam.
i	0,30	-	0,012	-	
j	5,56	-	0,219	-	4
k	7,07	-	0,273	-	
l	7,59	-	0,299	-	
m	-	4,70	-	0,185	

NOTES:

1 Protrusion of the dielectric beyond the reference plane is applicable to only the 0,146 in nominal dielectric core cables. When larger core diameter cables are used, no protrusion of the dielectric beyond the reference plane is permitted.

2 Shape of coupling nut optional; however, provision for wrench tightening should be made. For example: wrench flats.

3 Applicable only to the 0,146 is nominal dielectric core diameter cables. The 3,8 mm max. diameter is not applicable when larger core diameter cables are used.

4 Full length of thread.

5 Shape of connector body is optional; however, provision for wrench tightening should be made. For example: wrench flats.

6 Socket contacts must accept a pin contact of 0,51 mm to 1,63 mm (0,020 in to 0,064 in).

7 NOTE: CAUTION - Care should be taken when replacing larger diameter pin contacts (1,63 mm/0,64 in) with smaller diameter (0,5 mm/0,020 in) due to potential mechanical deformation in socket.

Copyright International Organization for Standardization
Provided by IHS under license with ISO
No reproduction or networking permitted without license from IHS
Not for Resale

3.2.4 TNC-type connectors

TNC connectors for use in the local distributed data interface network shall conform to the requirements of IEC 169-17. The mating face drawings are included here for information.

Performance

Characteristic impedance: 50 Ω

Working voltage: 500 V a.c. rms

Reflection factor: 0,13 max. to 11 GHz

Centre contact resistance: 20 mΩ max.

Outer conductor resistance: 5 mΩ max.

Copyright International Organization for Standardization
Provided by IHS under license with ISO
No reproduction or networking permitted without license from IHS
Not for Resale

Mating face dimensions

3.2.4.1 TNC-type pin connector
(Reference IEC 169-17)

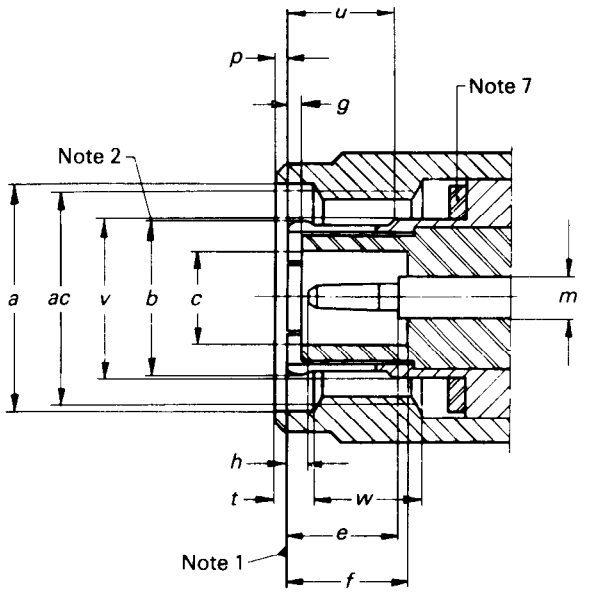

REF.	mm		in		NOTES
	Min.	Max.	Min.	Max.	
a	11,18	-	0,440	-	diam.
b	-	-	-	-	2/diam.
c	4,83	-	0,190	-	diam.
d	1,32	1,37	0,052	0,054	diam.
e	5,33	-	0,210	-	
f	5,28	-	0,208	-	
g	0,15	-	0,006		
h	0,35	-	0,014	-	
m	2,140 nom.		0,0842 nom.		10/diam.
p	-	1,98	-	0.078	9
t	1,6	-	0,063	-	
u	5,38	-	0,212	-	
v	-	8,18	-	0.322	diam.
w	3,96	-	0,156		
ac	-	-	-	-	6
ad	1,96	3,05	0,077	0.129	
af	-	0,64	-	0.025	diam.

NOTES:

1 Mechanical and electrical reference plane.

2 Slotted and flared to meet gauge test according to 6.1.1.

6 Screw thread (diameter) 11,1135 mm x 0,907 in accordance with ISO.

7 Sealing gasket to meet required electrical and environmental performance.

9 This dimension shows the position when the coupling nut is tightened.

10 Deviation from this dimension is determined by the required reflection factor.

Copyright International Organization for Standardization
Provided by IHS under license with ISO
No reproduction or networking permitted without license from IHS
Not for Resale

3.2.4.2 TNC-type socket connector
(Reference IEC 169-17.)

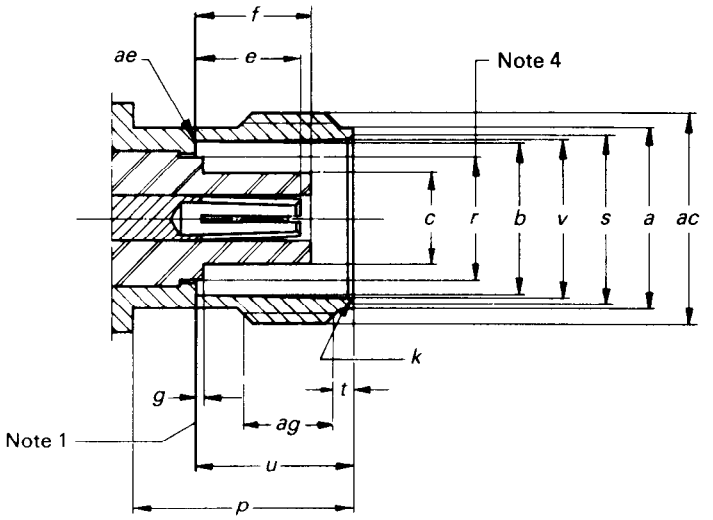

REF.	mm		in		NOTES
	Min.	Max.	Min.	Max.	
a	9,60	9,70	0,378	0,382	diam.
b	8,10	9,70	0,319	0,321	diam.
c	-	4,72	-	0,186	diam.
d	-	-	-	-	3/diam.
e	4,55	5,23	0,179	0,206	
f	-	5,28	-	0,208	
g	-	0,15	-	0,006	
h	4,95	-	0,195	-	
k	-	-	-	-	8
m	2,140 nom.		0,0842 nom.		10/diam.
p	10,52	-	0,414	-	
r	-	6,50	-	0,256	4/diam.
s	8,79	9,04	0,346	0,356	diam.
t	1,73	2,24		0,088	
u	8,31	8,51	0,327	0,335	
v	8,31	8,46	0,327	0,333	diam.
ac	-	-	-	-	6
ae	-	0,1	-	0,004	rad.
ag	4,75	-	0,187	-	

NOTES:

1 Mechanical and electrical reference plane.

3 Slotted and closed to meet requirements of 6.1.2.

4 Applies only when dielectric extends beyond reference plane.

6 Screw thread (diameter 11,1125 mm x 0,907) in accordance with ISO 263.

8 Chamfer or radius.

10 Deviation from this dimension is determined by the required reflection factor.

Copyright International Organization for Standardization
Provided by IHS under license with ISO
No reproduction or networking permitted without license from IHS
Not for Resale

3.2.5 TWINAX-type connectors

TWINAX connectors provide simultaneous connection for two coaxial cables, with keying to prevent reverse mating.

TWINAX connectors for use in local area network systems shall conform to the requirements of IEC 169-25. The mating face drawings are included here for information.

Performance

Characteristic impedance: Non-constant

Working voltage: 500 V a.c. rms

Reflection factor: Not applicable

Centre contact resistance: 20 mΩ max.

Outer conductor resistance: 5 mΩ max.

Application

ISO 8802-5 Reference only

Copyright International Organization for Standardization
Provided by IHS under license with ISO
No reproduction or networking permitted without license from IHS
Not for Resale

Mating face dimensions

3.2.5.1 TWINAX-type pin connector
(Reference IEC 169-25)

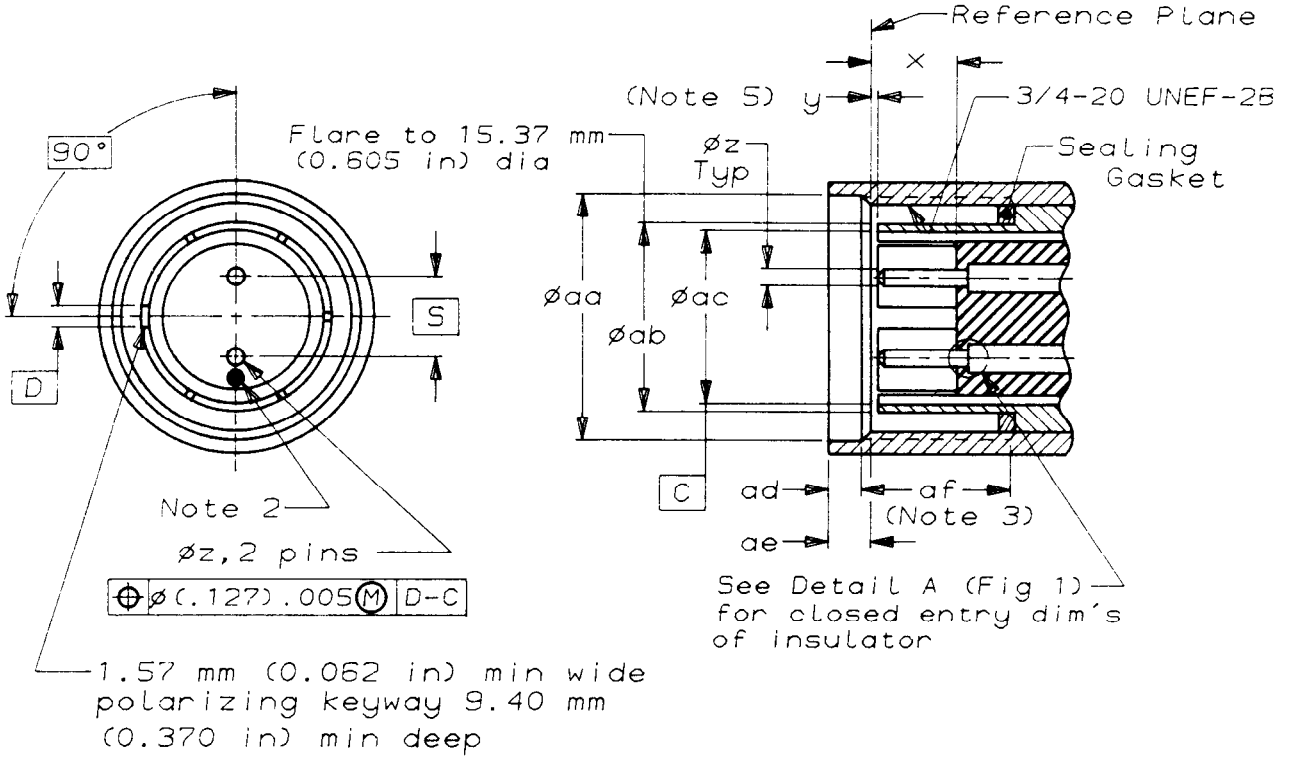

3.2.5.2 TWINAX-type socket connector
(Reference IEC 169-25)

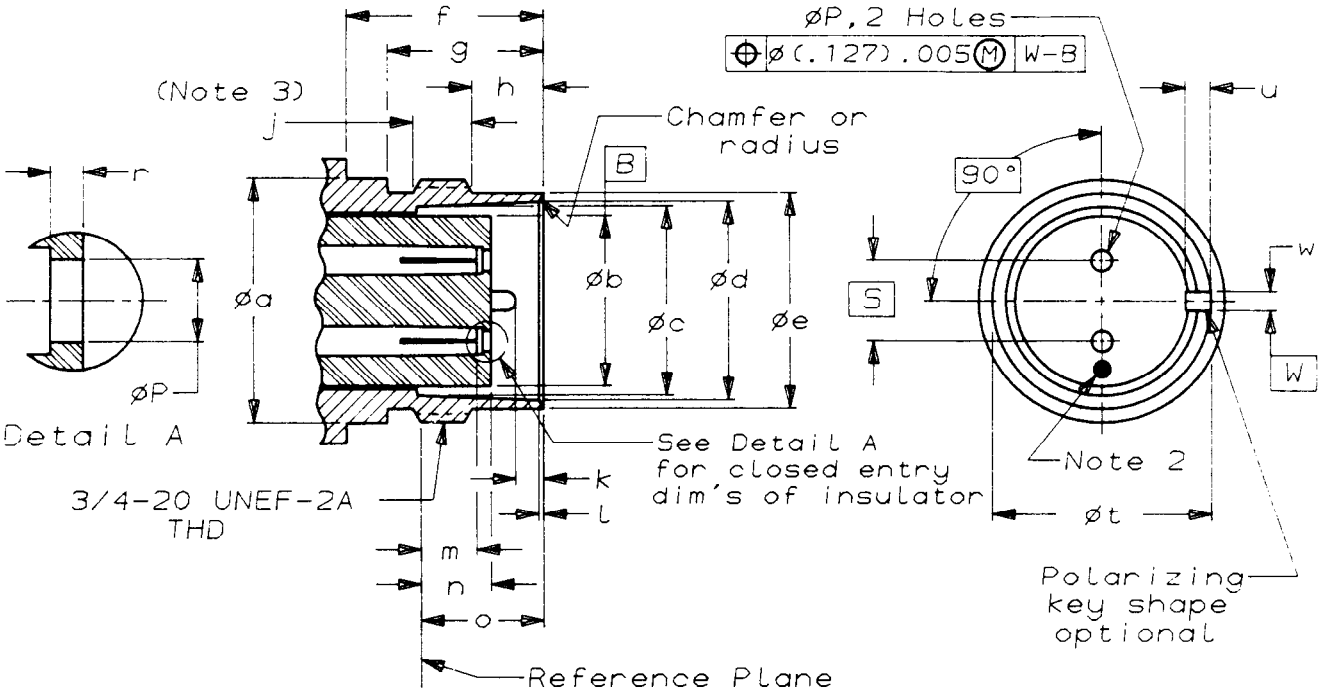

Copyright International Organization for Standardization
Provided by IHS under license with ISO
No reproduction or networking permitted without license from IHS
Not for Resale

TWINAX-type connector dimensions

REF.	mm		in		NOTES
	Min.	Max.	Min.	Max.	
a	-	19,18	-	0,755	
b	13,41	13,56	0,528	0,533	
c	14,86	15,11	0,585	0,595	
d	15,62	15,88	0,615	0,625	
e	16,94	17,12	0,667	0,674	
f	13,72	-	0,540	-	
g	12,07				
h	5,54		0,218		
j	4,55	-	0,179	-	
k	2,16	2,57	0,085	0,101	
l	0,381		0,015		
m	4,32	-	0,070	-	
n	5,74	6,50	0,226	0,256	
o	9,80	9,91	0,386	0,390	
p	1,63		0,064		
r	0,64		0,025		
s	6,35		0,025		
t	16,97	17,12	0,668	0,674	
u	1,70	2,74	0,067	0,108	
w	-	1,55	-	0,061	
x	6,10	6,60	0,240	0,260	
y	See Note 5		See Note 5		
z	1,32	1,37	0,052	0,054	
aa	19,30	-	0,760	-	
ab	14,81	14,91	0,583	0,587	
ac	13,56	13,67	0,534	0,538	
ad	2,54	-	0,100	-	
ae	-	3,81	-	0,150	
af	8,33	-	0,328	-	

NOTES

1 Insulator must be keyed in body to prevent rotation and orient insulator and contacts in their proper polarizing position. (Polarizing position optional.)

2 Black dot or a visible mark which is easily recognized.

3 Minimum full thread.

4 To start of key.

5 0,000 mm + 0,76 mm/-0,51 mm (0,000 in + 0,030 in/-0,020 in).

Copyright International Organization for Standardization
Provided by IHS under license with ISO
No reproduction or networking permitted without license from IHS
Not for Resale

3.2.6 Coaxial taps (for reference only)

Coaxial taps shall meet the requirements of ISO 8802-3.

The coaxial tap is used to make an in-line connection to existing coaxial cable without cutting or interrupting service.

The tap contact systems should consider the relevant electrical and mechanical parameters to the point of electrical connection between the tap probe and the cable centre conductor to ensure that reliable electrical contact is made and retained throughout the useful life of these components. Number of applications to cable without loss of performance - 5. Taps must accommodate cable from 0,365 in to 0,412 in diameter.

Performance

Characteristic impedance: Not applicable

Working voltage: 600 V d.c. or a.c. rms

Reflection factor: Not applicable

Centre contact resistance: 50 mΩ max.

Outer conductor resistance: 50 mΩ max.

Pictorial representation (no standard)

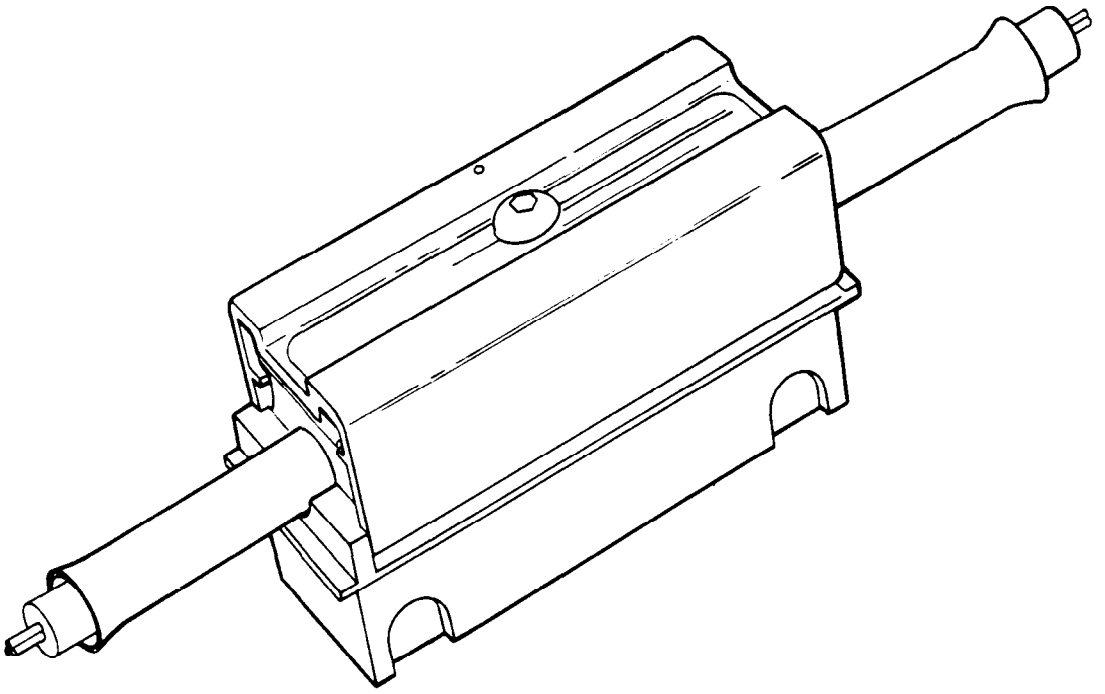

Copyright International Organization for Standardization
Provided by IHS under license with ISO
No reproduction or networking permitted without license from IHS
Not for Resale

Typical installation dimensions
(Proprietary designs will vary.)

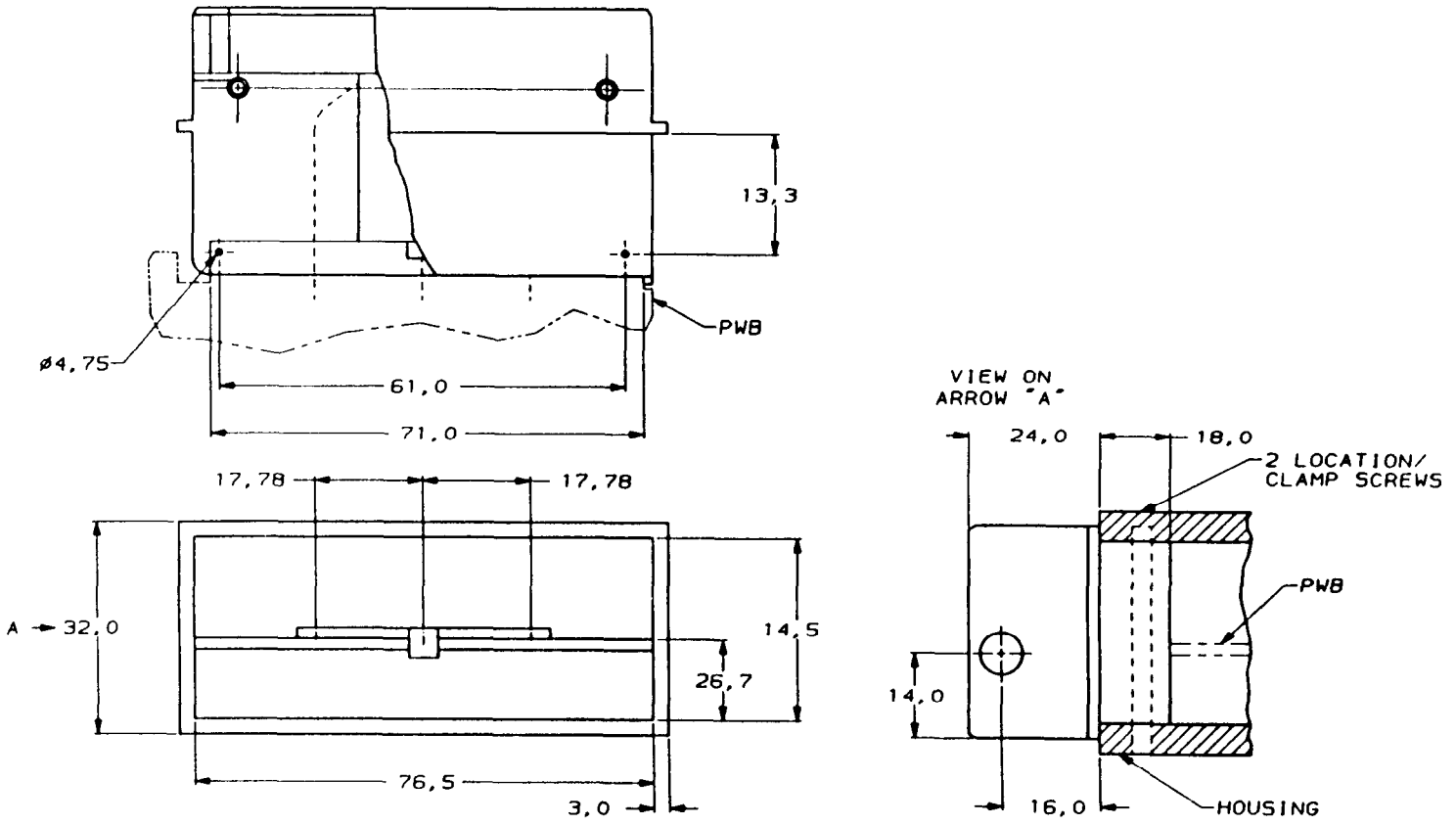

Copyright International Organization for Standardization
Provided by IHS under license with ISO
No reproduction or networking permitted without license from IHS
Not for Resale

3.3 Fibre optic media

The optical fibre medium is the newest technology to be included in local area networks. The IEC has established a technical committee (TC 86) to address connector and fibre issues associated with this advancement. It is early in the evolution of documents but two types of optical interfaces are being defined, the Simplex generic and the Duplex.

3.3.1 FSMA Type connectors

The simplest form of optical interface and presently the most popular. Specified by ISO/IEC JTC1 SC 83/WG 2 on the Fibre Optic Inter Repeater Link (FOIRL) ISO/IEC 8802-3 DAD 5. The connector requirements are specified in IEC 874-2.

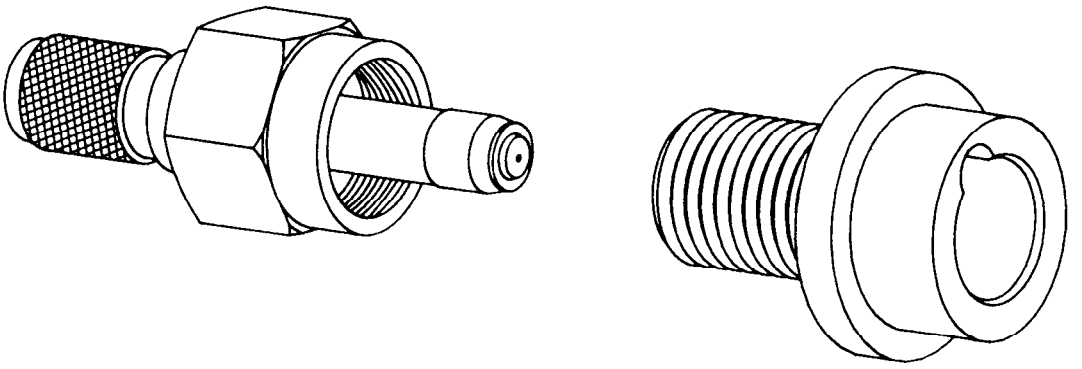

Application

ISO 8802-3 - DAD 5

Copyright International Organization for Standardization
Provided by IHS under license with ISO
No reproduction or networking permitted without license from IHS
Not for Resale

3.3.1.1 FSMA plug dimensions

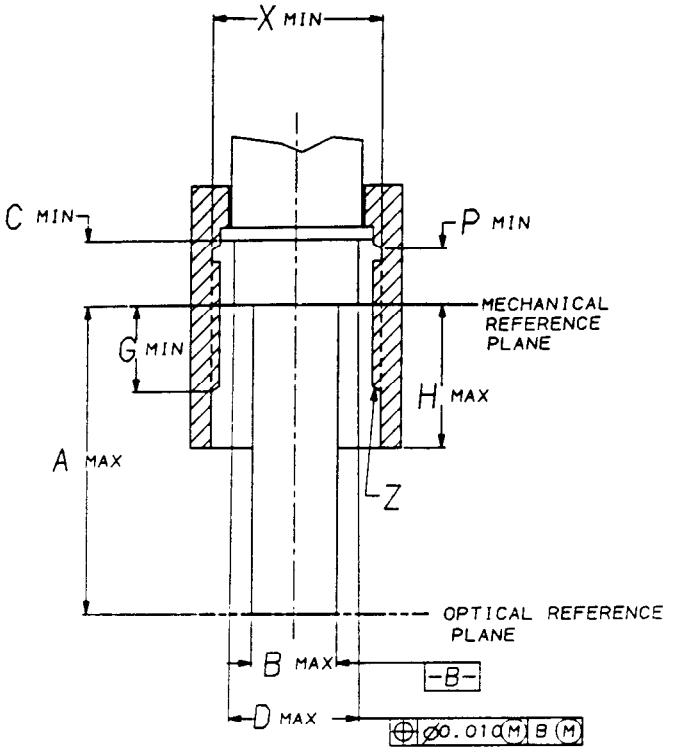

Ref.	Min.	Max.	Notes
a	-	9,812	2
b	-	3,1748	3
c	2,00	-	
d	-	4,62	
g	1,50	-	
h	-	3,70	
p	2,00	-	8
x	6,35	-	
z	1/4-36-UNS-28		9

NOTES

1 Dimensions for intermateability are shown. See relevant detail specification for appropriate minimum/maximum requirement.

2 Dimension is for terminated finished non-butting connectors. When butting is planned for, this maximum may be exceeded provided the mandatory test defined under section 1.5 is passed during qualification approval.

3 The plug must enter a 3,175 mm diameter hole gauge.

4 For fibre and cable termination dimensions see detail specifications. To be such that the mechanical performance meets the requirements given in the detail specifications.

5 To avoid damage no sharp edges are allowed.

6 Where resilient tip or other method of alignment is used, see detail specification for dimensions.

7 If a resilient sleeve style connector is used with another style of connector, or in a receptacle, a half sleeve must be used.

8 Undercut or thread.

9 1/4-36-UNS-2B indicates an inch screw thread with nominal diameter 0,25 in and pitch 36 threads per inch

Copyright International Organization for Standardization
Provided by IHS under license with ISO
No reproduction or networking permitted without license from IHS
Not for Resale

3.3.1.2 FSMA socket dimensions

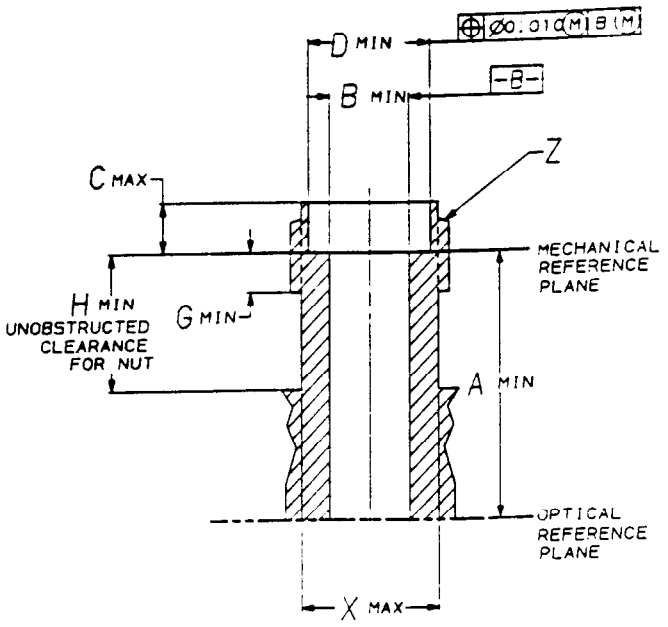

REF.	MIN.	MAX.	NOTES
a	*9,813*	-	
b	*3,1750*	-	*3*
c	-	*1,98*	
d	*4,65*	-	
g	*1,50*	-	
h	*3,73*	-	
x	-	*5,48*	
z	*1/4-36-UNS-2A*		*4*

1 Dimensions for intermateability are shown. See relevant detail specification for appropriate minimum/maximum requirements.

2 To avoid damage, no sharp edges are allowed.

3 Where captivated resilient alignment sleeve is used, this dimension may be less, see detail specification for dimensions.

4 1/4-36-UNS-2A indicates an inch screw thread with nominal diameter 0,25 in and pitch 36 threads per inch.

Copyright International Organization for Standardization
Provided by IHS under license with ISO
No reproduction or networking permitted without license from IHS
Not for Resale

3.3.2 Duplex connectors (PMD)

The first dual optical interface device specified by ISO/IEC JTC 1 SC 13. The receptacle only is specified. The plug isometric drawing is for reference only.

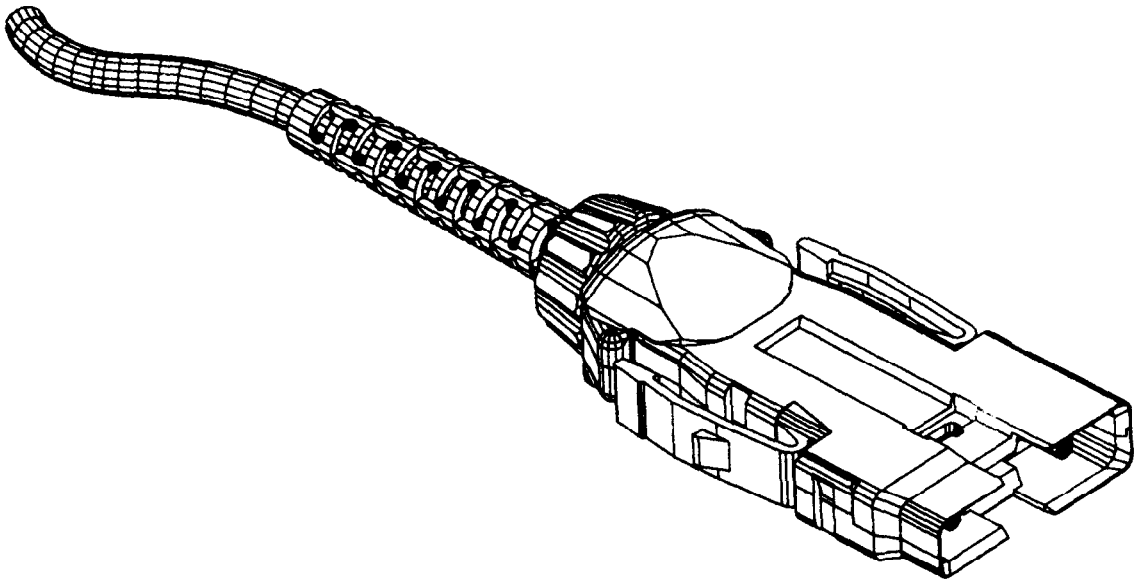

Duplex plug

Application

ISO 8802-4
ISO 9314-3

Copyright International Organization for Standardization
Provided by IHS under license with ISO
No reproduction or networking permitted without license from IHS
Not for Resale

3.3.2.1 *Duplex receptacle dimensions*

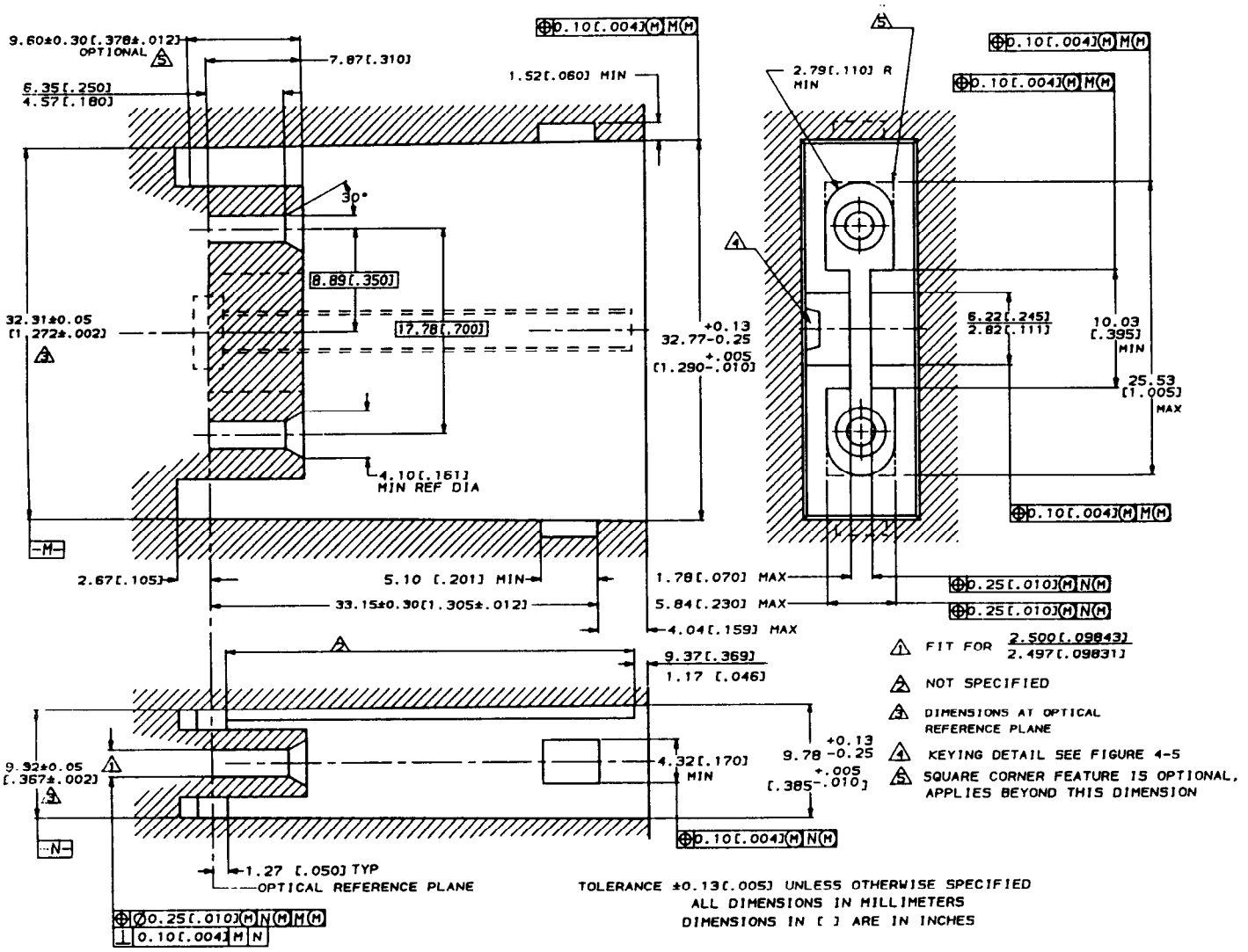

3.3.2.2 *Keying dimensions*

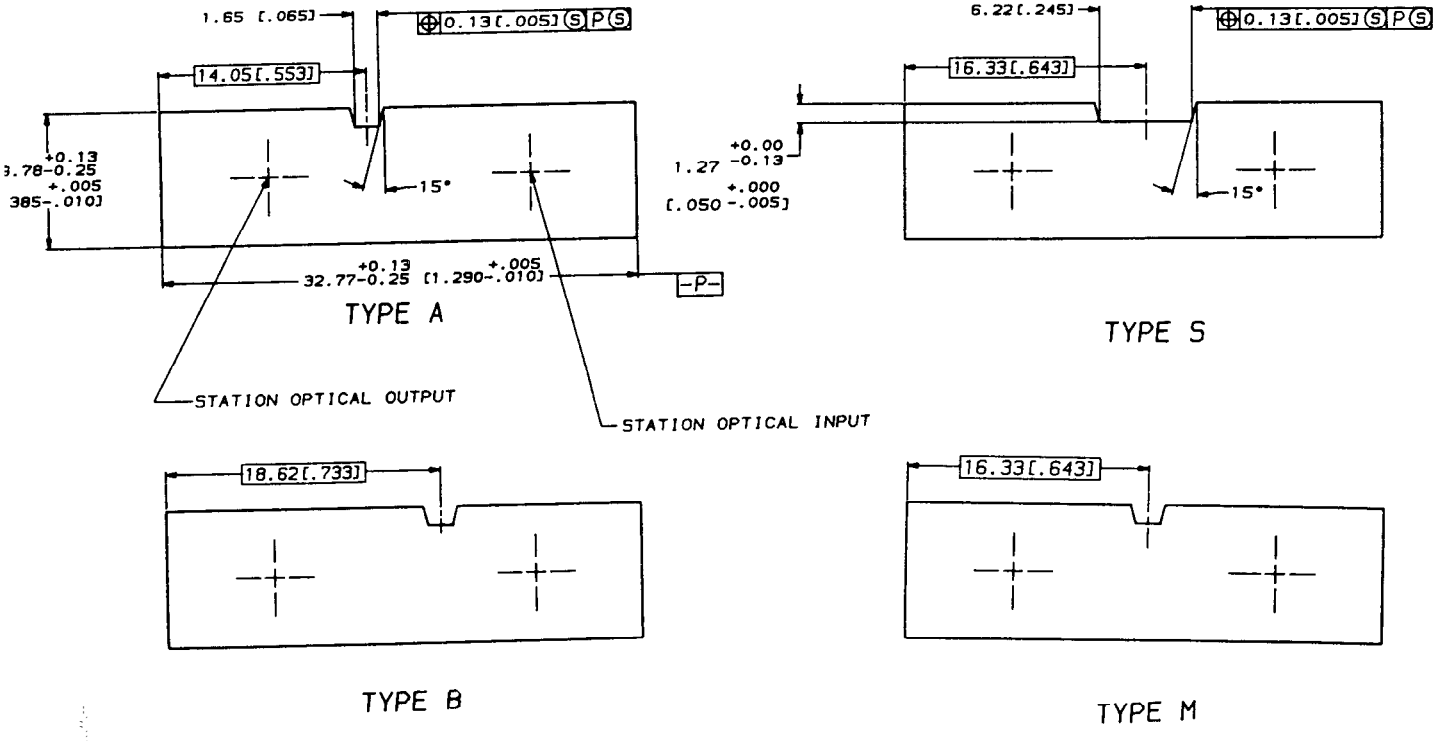

Copyright International Organization for Standardization
Provided by IHS under license with ISO
No reproduction or networking permitted without license from IHS
Not for Resale

Table 1 - LAN Connector Survey

LAN	Bandwidth	Medium	Rate	Connector Type	International Standard
CSMA/CD Carrier sense/ Multiple access/ collision detection					
ISO 8802-3	Baseband	Twisted pair	1 Mbit/s to 10 Mbit/s	15-pole D	IEC 807-2/3
10 BASE 5	Baseband	Coaxial	10 Mbit/s	N-type	IEC 169-16
10 BASE 2	Baseband	Coaxial	10 Mbit/s	BNC-type	IEC 169-8
DAD 4 1 BASE 5	Baseband	Twisted Pair	1 Mbit/s	8-pole modular	IEC 603-7
DAD 3 10 BROAD 36	Broadband	Coaxial	10 Mbit/s	F-type	IEC 169-24
DAD 5 FOIRL	Baseband	Fibre Optic	10 Mbit/s	FSMA	IEC 83(Sec)54
Token passing bus access method ISO 8802-4					
Phase Continuous	Broadband	Coaxial	1 Mbit/s	BNC type	IEC 169-8
Phase Coherent	Broadband	Coaxial	5/10 Mbit/s	F-type	IEC 169-24
AM/PSK	Broadband	Coaxial	1/5/10 Mbit/s	F-type	IEC 169-24
FO	Broadband	Fibre optic	5/10/20 Mbit/s	Duplex	ISO 9314-3 (PMD)
Token passing ring access method ISO 8802-5	Baseband	Twisted pair	4/16 Mbit/s	4-pole MIC	IEC 48B(CO)189
Slotted ring access method ISO 8802-7	Baseband	Twisted pair	10 Mbit/s	15-pole D	IEC 807-2/3 ISO 4903*
DTE	Baseband	Flat Cable	10 Mbit/s	50-pole	Under development in IEC SC 48B
Integrated services digital network (ISDN)					
Basic Access CCITT I.430	Baseband	Twisted pair	192 Kbit/s	8-pole modular	IEC 603-7
Primary Access CCITT I.431	Baseband	Twisted pair	1,544 or 2,048 Mbit/s	8-pole modular	Under development in IEC SC 48B
Fibre distributed data interface (FDDI)	Broadband	Fibre optic	100 Mbit/s	Duplex	Under development in IEC SC 86B
Local distributed data interface (LDDI)	Broadband	Coaxial	2 x 70 Mbit/s each (140 Mbit/s)	TNC-type	IEC 169-17

*Only for specification of the latching blocks.

Copyright International Organization for Standardization
Provided by IHS under license with ISO
No reproduction or networking permitted without license from IHS
Not for Resale

UDC 681.327.8 : 621.316.541 : 621.39

Descriptors: data processing, information interchange, network interconnection, local area networks, computer interfaces, multi-contact connectors, plug connectors, socket connectors, specifications, dimensions.

Price based on 42 pages

Copyright International Organization for Standardization
Provided by IHS under license with ISO
No reproduction or networking permitted without license from IHS

Not for Resale