TECHNICAL REPORT

ISO/IEC TR 24729-3

First edition
2009-05-15

Information technology — Radio frequency identification for item management — Implementation guidelines —

Part 3: Implementation and operation of UHF RFID Interrogator systems in logistics applications

Technologies de l'information — Identification par radiofréquence pour la gestion d'objets — Lignes directrices de mise en application —

Partie 3: Mise en application et fonctionnement des systèmes d'interrogation UHF RFID dans les applications logistiques

Reference number
ISO/IEC TR 24729-3:2009(E)

© ISO/IEC 2009

Copyright International Organization for Standardization
Provided by IHS under license with ISO
No reproduction or networking permitted without license from IHS

Not for Resale

PDF disclaimer

This PDF file may contain embedded typefaces. In accordance with Adobe's licensing policy, this file may be printed or viewed but shall not be edited unless the typefaces which are embedded are licensed to and installed on the computer performing the editing. In downloading this file, parties accept therein the responsibility of not infringing Adobe's licensing policy. The ISO Central Secretariat accepts no liability in this area.

Adobe is a trademark of Adobe Systems Incorporated.

Details of the software products used to create this PDF file can be found in the General Info relative to the file; the PDF-creation parameters were optimized for printing. Every care has been taken to ensure that the file is suitable for use by ISO member bodies. In the unlikely event that a problem relating to it is found, please inform the Central Secretariat at the address given below.



COPYRIGHT PROTECTED DOCUMENT

© ISO/IEC 2009

All rights reserved. Unless otherwise specified, no part of this publication may be reproduced or utilized in any form or by any means, electronic or mechanical, including photocopying and microfilm, without permission in writing from either ISO at the address below or ISO's member body in the country of the requester.

ISO copyright office
Case postale 56 • CH-1211 Geneva 20
Tel. + 41 22 749 01 11
Fax + 41 22 749 09 47
E-mail copyright@iso.org
Web www.iso.org

Published in Switzerland

Copyright International Organization for Standardization
Provided by IHS under license with ISO
No reproduction or networking permitted without license from IHS
Not for Resale

© ISO/IEC 2009 – All rights reserved

Contents

Page

Foreword iv
1 Scope 1
2 Normative references 1
3 Terms and definitions 1
4 Application requirements 2
4.1 General 2
4.2 General RF emissions general population 2
4.3 RF emissions and susceptibility in health care setting 2
5 Basic RFID system principles and operation 2
5.1 Characteristics of RFID at UHF Frequencies (860-960 MHz) 3
5.2 Regulatory Considerations 8
6 Site and operating environment considerations 10
6.1 Site survey 10
6.2 Radio Frequency Interference 11
6.3 Water and Dust 15
6.4 Shock and Vibration 18
6.5 Drop Specification 18
6.6 Temperature 18
6.7 Connectors and Cabling 19
6.8 Grounding 19
7 Fixed RFID Reading Devices 19
7.1 Dock Door Portals 19
7.2 Open conveyor read points 22
8 Mobile RFID Reading Devices 26
8.1 Hand Held RFID Readers 26
8.2 Forklift/Vehicle Mounted RFID Readers 27
8.3 As a source of Interference 29
8.4 As a subject of Interference 29
9 Implementation 29
9.1 Basic System Approach 30
9.2 Antenna selection and configuration 31
9.3 Antenna Positioning 32
9.4 Outside Antennas 32
9.5 Shielding 32
9.6 Commissioning the System 33
9.7 Site Records 34
10 Tuning and Maintenance 34
10.1 Dust and Contaminates 35
10.2 Antenna Fixtures 35
Bibliography 36

© ISO/IEC 2009 All rights reserved

Copyright International Organization for Standardization
Provided by IHS under license with ISO
No reproduction or networking permitted without license from IHS
Not for Resale

Foreword

ISO (the International Organization for Standardization) and IEC (the International Electrotechnical Commission) form the specialized system for worldwide standardization. National bodies that are members of ISO or IEC participate in the development of International Standards through technical committees established by the respective organization to deal with particular fields of technical activity. ISO and IEC technical committees collaborate in fields of mutual interest. Other international organizations, governmental and non-governmental, in liaison with ISO and IEC, also take part in the work. In the field of information technology, ISO and IEC have established a joint technical committee, ISO/IEC JTC 1.

International Standards are drafted in accordance with the rules given in the ISO/IEC Directives, Part 2.

The main task of the joint technical committee is to prepare International Standards. Draft International Standards adopted by the joint technical committee are circulated to national bodies for voting. Publication as an International Standard requires approval by at least 75 % of the national bodies casting a vote.

In exceptional circumstances, the joint technical committee may propose the publication of a Technical Report of one of the following types:

— type 1, when the required support cannot be obtained for the publication of an International Standard, despite repeated efforts;

— type 2, when the subject is still under technical development or where for any other reason there is the future but not immediate possibility of an agreement on an International Standard;

— type 3, when the joint technical committee has collected data of a different kind from that which is normally published as an International Standard ("state of the art", for example).

Technical Reports of types 1 and 2 are subject to review within three years of publication, to decide whether they can be transformed into International Standards. Technical Reports of type 3 do not necessarily have to be reviewed until the data they provide are considered to be no longer valid or useful.

Attention is drawn to the possibility that some of the elements of this document may be the subject of patent rights. ISO and IEC shall not be held responsible for identifying any or all such patent rights.

ISO/IEC TR 24729-3, which is a Technical Report of type 3, was prepared by Joint Technical Committee ISO/IEC JTC 1, *Information technology*, Subcommittee SC 31, *Automatic identification and data capture techniques*.

ISO/IEC TR 24729 consists of the following parts, under the general title *Information technology — Radio frequency identification for item management — Implementation guidelines*:

— *Part 1: RFID-enabled labels and packaging supporting ISO/IEC 18000-6C*

— *Part 2: Recycling and RFID tags*

— *Part 3: Implementation and operation of UHF RFID Interrogator systems in logistics applications*

— *Part 4: Tag data security*

© ISO/IEC 2009 – All rights reserved
Copyright International Organization for Standardization
Provided by IHS under license with ISO
No reproduction or networking permitted without license from IHS
Not for Resale

Information technology — Radio frequency identification for item management — Implementation guidelines —

Part 3: Implementation and operation of UHF RFID Interrogator systems in logistics applications

1 Scope

This part of ISO/IEC TR 24729 provides reference information and practical knowledge in the selection, installation and application of ISO/IEC 18000-6C RFID Readers. RFID Readers include fixed mounted (such as portal, conveyor, and wrap stations), handheld (tethered and wireless), and mobile mounted (such as those found on forklifts). This part of ISO/IEC TR 24729 presents guidelines to improve the performance of RFID data collection systems for more successful applications and to cover the approaches necessary to ensure that the operational requirements of the end user are met. Many of the techniques recommended are the result of practical tests in working environments. However, each application is different and thus the techniques recommended herein might not be applicable in all situations.

2 Normative references

The following referenced documents are indispensable for the application of this document. For dated references, only the edition cited applies. For undated references, the latest edition of the referenced document (including any amendments) applies.

ISO/IEC 19762-1, *Information technology — Automatic identification and data capture (AIDC) techniques — Harmonized vocabulary — Part 1: General terms relating to AIDC*

ISO/IEC 19762-3, *Information technology — Automatic identification and data capture (AIDC) techniques — Harmonized vocabulary — Part 3: Radio frequency identification (RFID)*

3 Terms and definitions

For the purposes of this document, the terms and definitions given in ISO/IEC 19762-1 and ISO/IEC 19762-3 apply.

© ISO/IEC 2009 All rights reserved

Copyright International Organization for Standardization
Provided by IHS under license with ISO
No reproduction or networking permitted without license from IHS
Not for Resale

4 Application requirements

4.1 General

The measure of success for any data collection system will be based on the degree to which it meets or exceeds the particular application requirements. A clear understanding of these is necessary even prior to the planning of the implementation. This can have direct impact on the cost and duration of implementation, the cost of ongoing maintenance and thus the very economic viability of the project. What are the business objectives for the implementation? Will the system be presented with one or multiple tags for data collection at instances for reading? What percentage of reading tags in the interrogation zone is required? Will business process changes be implemented concurrently? Examples such as these should be set out with metrics for measurement and acceptance levels established.

Understanding these metrics will influence the selection and implementation of an RFID interrogator.

At an early stage in the project it is important to establish a set of tests that will demonstrate performance of the installed system in accordance with the agreed requirements.

4.2 General RF emissions general population

Device manufacturers claiming conformance to this standard shall self-certify that RF emissions do not exceed the maximum permitted exposure limits recommended by either IEEE C95.1:2005 or ICNIRP according to IEC 62369-1. If a device manufacturer is unsure as to which recommendation to be cited for compliance the manufacturer shall self-certify to ICNIRP limits.

4.3 RF emissions and susceptibility in health care setting

Device manufacturers claiming conformance to this standard shall self-certify that RF emissions and susceptibility comply with IEC 60601-1-2.

5 Basic RFID system principles and operation

A basic RFID system consists of an interrogator (reader/writer) with its associated antennas and one or more tags. The antennas are arranged to transmit their signal within an interrogation zone. Tags are attached to objects that are to be identified. When a tag enters an interrogation zone, it is activated by the transmitted signal from the interrogator. Typically the tag will respond by sending its identity and possibly some associated data. The identity and data from the tag is validated by the receiver in the interrogator and passed to its host system. A block diagram of a basic RFID system is shown in Figure 1.

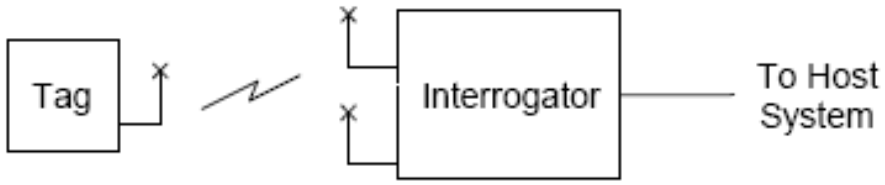

Figure 1 — Basic RFID system

The ISO/IEC 18000-6C protocol is used to handle the transfer of data between the interrogator and tags. This ensures the integrity of data transfer. In addition the protocol handles the process for writing data to the tag and controls the procedure for reading multiple tags that may be present simultaneously within the same interrogation zone.

© ISO/IEC 2009 – All rights reserved
Copyright International Organization for Standardization
Provided by IHS under license with ISO
No reproduction or networking permitted without license from IHS
Not for Resale

Tags exist in a range of shapes and sizes to satisfy the particular needs of their intended application. Many tags are passive and derive the power for their operation from the field generated by the interrogator. However some tags may be fitted with batteries, which may enable them to operate at significantly greater ranges.

5.1 Characteristics of RFID at UHF Frequencies (860-960 MHz)

The performance of RFID systems, particularly those operating at UHF frequencies (860-960 MHz), is strongly influenced by their environment and usage. The materials and area surrounding the RFID readers have a great impact on the success of the system. Controlling configurations such as location, read cycle duration, etc. will also impact performance. Likewise, the materials surrounding the RFID tag and its placement are key factors in the success of a robust system implementation. Users are referred to ISO/IEC TR 24729-1 for guidelines on selecting placement of RFID enabled labels and optimising the readability.

UHF transmission, between 300 MHz and 3 GHz, takes place by means of electromagnetic waves. At these frequencies electromagnetic waves have properties that have many similarities to light. Transmissions travel in a straight line and the power of the received signal is a function of the inverse square of the distance from its source. For example if the distance from a transmit antenna is doubled the received power drops to one quarter. This property means that it is possible with UHF systems to achieve significant reading ranges. Operation in the UHF band also makes it possible to transfer information at high data rates. Both of these characteristics make UHF systems well suited for use in applications where tags are moving at speed or in which there are multiple tags present in an interrogation zone.

However UHF can present the installer with a number of challenges. RF energy at UHF is reflected by many metals and absorbed by many liquids. Transmissions at UHF are readily reflected from many surfaces such as floors, walls, ceilings and fixtures. These can cause the unwanted activation of tags and can also give rise to an effect known as standing wave nulls. This can produce points within the interrogation zone where there are very low levels of signal. UHF signals also experience significant levels of attenuation in the presence of water. In applications where water may be present, system integrators must therefore make suitable provision for a reduction in reading range during the design and configuration of the installation. A successful system design will account for many of these factors before installation of any equipment occurs. After installation a thorough analysis and tune up along with proper maintenance is required.

RFID systems typically implement far-field propagative electro-magnetic coupling techniques. Inductive and capacitive near-field coupling techniques are also implemented for item level tagging. This document focuses on far-field electromagnetic coupling considerations of UHF systems.

5.1.1 Antennas and Antenna Radiation Patterns

All antennas radiate RF power in asymmetrical patterns. Understanding the radiation pattern of the antennas to be used in your system is an important consideration for good system design. Patterns are usually represented as polar plots in a horizontal and a vertical plane with the relative power in decibels (dBs) expressed in the rings. In some instances the antenna radiation and gain properties must be expressed in dBi (using an isotropic antenna reference) and dBd (using a ½-wave dipole antenna reference) for proper evaluation. An example of an antenna radiation pattern is shown in Figure 2.

--`,,```,,,,````-`-`,,`,,`,`,,`---

© ISO/IEC 2009 All rights reserved

Copyright International Organization for Standardization
Provided by IHS under license with ISO
No reproduction or networking permitted without license from IHS
Not for Resale

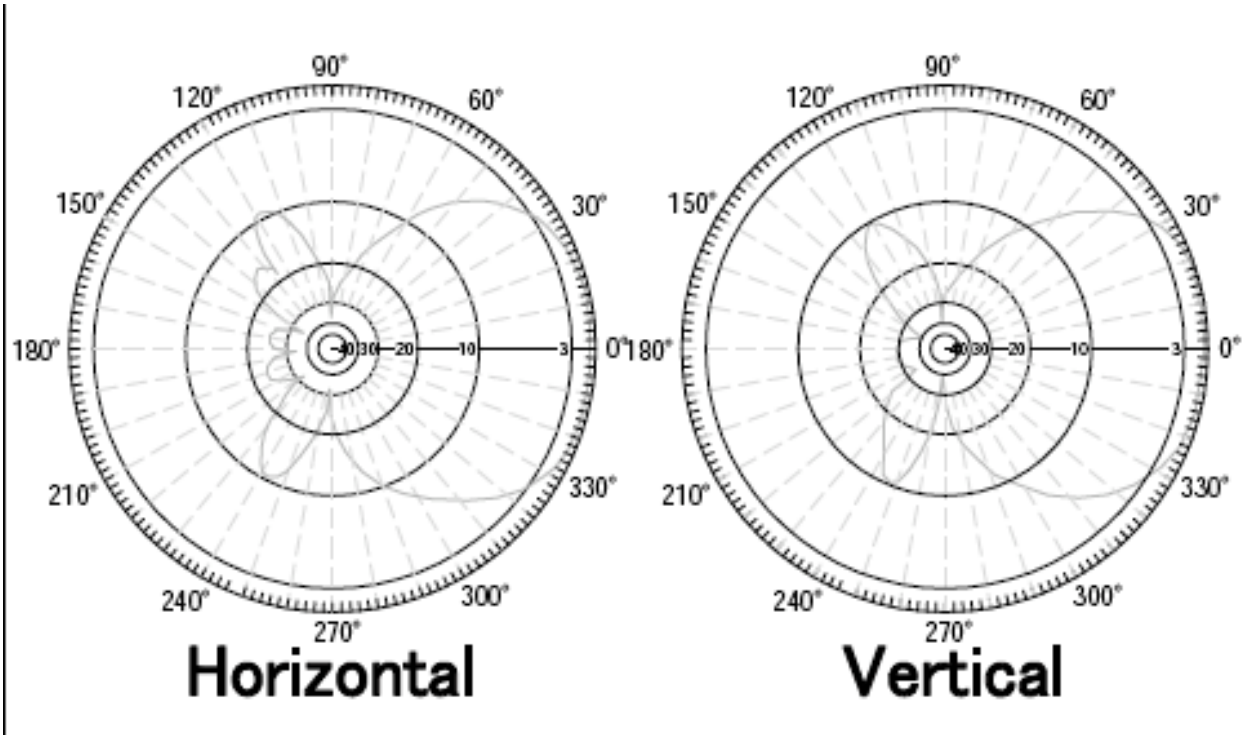

Figure 2 — Sample antenna plots

The antenna shown in these plots has some gain in a main front lobe with two side lobes at 10 dB lower power and a back lobe at 30 dB lower power. Use these antenna plots to understand the "width" of the antenna power and the side lobes direction and relative power level. The angle subtended between the half power (or 3 dB) points of the main front lobe is known as the beam width. Often beam width is expressed as both a horizontal and vertical value, which need not necessarily be the same. In many installations the long reading ranges possible at UHF mean that tags outside the desired interrogation zone are inadvertently activated. The relationship between variable reading ranges and the desired interrogation zone is shown in Figure 3. The desired interrogation zone (best zone) is different depending on the individual application, especially in practical operational space. For example, in wide warehouse spaces, long reading range will be required to read the tags of large pallets. On the other hand, in narrow spaces such as a parts centre, the short reading range is desired for reading tags of small size packages to avoid the inadvertently reading the tags of the adjacent zone.

© ISO/IEC 2009 – All rights reserved
Copyright International Organization for Standardization
Provided by IHS under license with ISO
No reproduction or networking permitted without license from IHS
Not for Resale

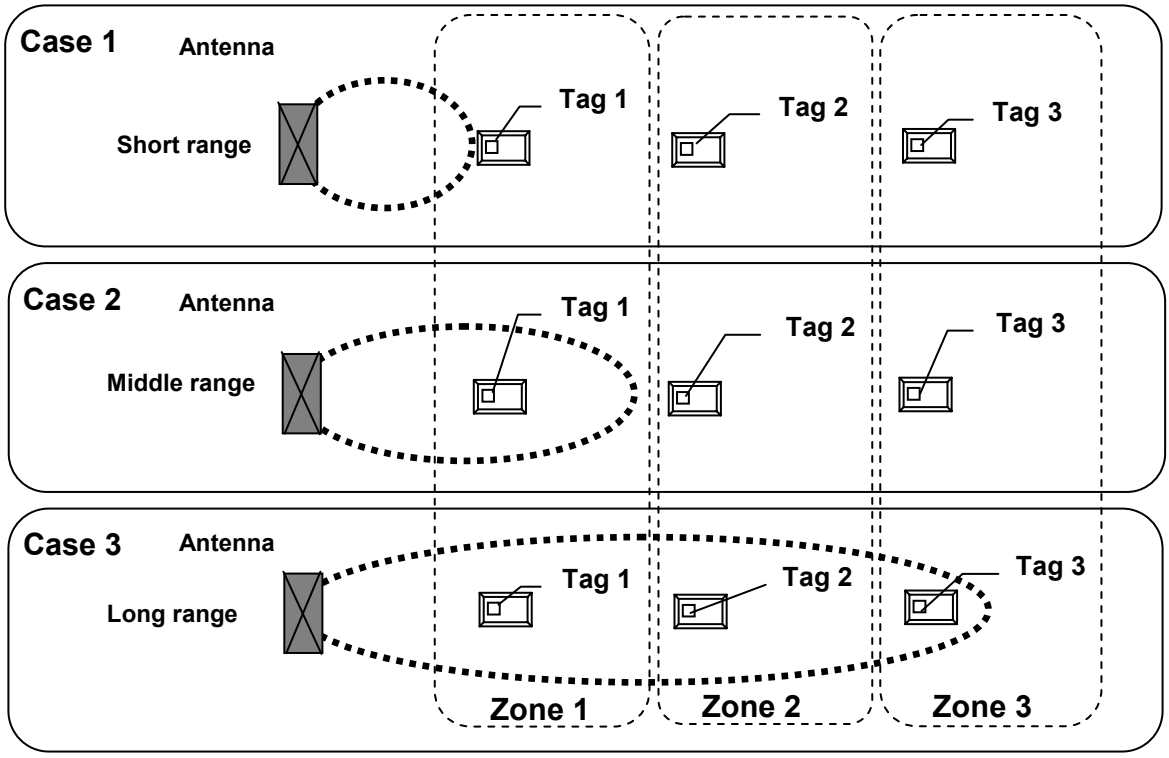

Figure 3 — Relationship between variable reading ranges and the desired interrogation zone

The use of antennas with a narrow beam width provides one means by which it is possible to limit the area of the interrogation zone.

The most common type of antenna used at UHF is the patch antenna. This typically has a beam width of 70 degrees. The patch antenna is fully satisfactory for many short to medium range applications where there are no other interrogators and unwanted tags in the immediate vicinity. In applications where longer reading ranges are required it may be necessary to control the extent of the interrogation zone more precisely. A first order of improvement may be achieved by using a version of the standard patch antenna that is physically larger. This makes it possible to produce antennas with a horizontal beam width down to 30 degrees. Other types of antenna exist with narrower beam widths. One of these is the helical antenna, which can have a beam width of as little as 10 degrees. This narrow beam width makes it possible to generate an interrogation zone that is very directional. The relationship between variable beam width and the wanted interrogation zone is shown in Figure 4.

As the beam width of an antenna is reduced the transmitted power is compressed into a smaller volume, which produces increased field intensity. This effect is quantified by the term "antenna gain". Since the radio regulations limit the maximum field level that is permitted, it is necessary to reduce the level of power generated by the interrogator to compensate for the increased gain of the antenna. Where the use of different antennas is allowed by the product specifications, adjustment methods should be included within the interrogator product manual.

--`,,```,,,,````-`-`,,`,,`,`,,`---

© ISO/IEC 2009 All rights reserved

Copyright International Organization for Standardization
Provided by IHS under license with ISO
No reproduction or networking permitted without license from IHS
Not for Resale

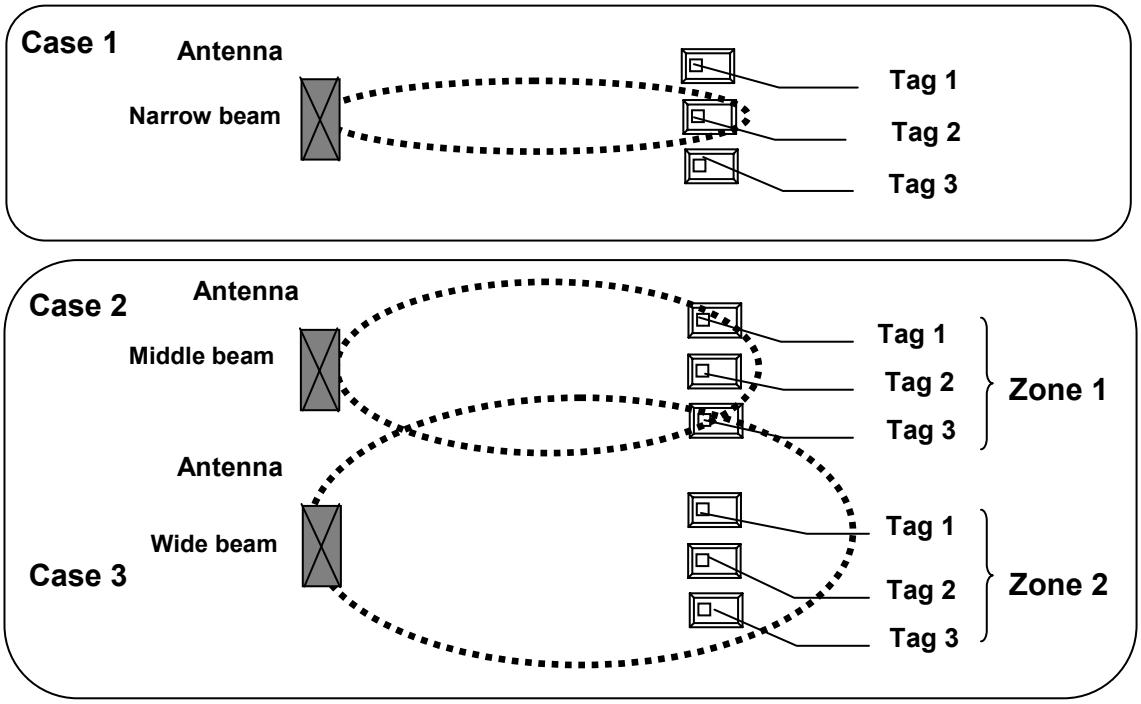

NOTE

In case 1, Tag 2 is read

In case 2, Tags 1, 2 and 3 in Zone 1 are read

In case 3, Tags 1, 2 and 3 in Zone 2 are read plus Tag 3 in Zone 1

Figure 4 — Relationship between variable beam width and the wanted interrogation zone

Generally transmissions from the antenna of the interrogator will be circularly polarized. This eliminates differences in the reading range of tags caused by their orientation in the x and y planes (but not the z plane, which is the direction of travel of the radio wave). Users are again referred to ISO/IEC TR 24729-1 for guidelines on selecting placement of RFID enabled labels and optimising the readability.

Where the orientation of the tag is known it is possible to use a linear antenna, which will provide an increase of about 40% in the maximum achievable reading range. The reason for this is that with a linear antenna, the tag will continuously be in its optimum orientation. For a circularly polarized transmission the tag will experience optimum orientation for only some of the time because the transmit field is rotating. In the later case less power is transferred to the tag, which therefore operates at less range. This reduced range is caused by the fact that when a circularly polarized wave impinges on a linear antenna, only the component of the wave along the antenna axis has any effect. Thus a circularly polarized wave will interact with a linear antenna tilted at any angle with the plane perpendicular to the axis of propagation, but in every case only have the transmitted power can be received.

5.1.2 Protocol Influences

The ISO/IEC 18000-6C RFID air interface protocol enables advanced RFID implementations such as Dense Reader Mode and Session Control that allow multiple readers in close proximity to function with higher reliability. A thorough understanding of these features is required for systems designed with a large number of readers. It is typically recommended to work with an equipment supplier to understand which of these features are supported and how to configure them.

© ISO/IEC 2009 – All rights reserved
Copyright International Organization for Standardization
Provided by IHS under license with ISO
No reproduction or networking permitted without license from IHS
Not for Resale

5.1.3 Detuning and Absorption

The proximity of certain materials to UHF tags may cause a significant reduction in their reading range. This effect is due predominantly to de-tuning of the resonant frequency of the tag. Spacing the tag a small distance away from the material can significantly reduce this effect. However, the application may impose a restriction on the extent to which spacing is acceptable. Alternatively, where the material to be tagged is known in advance, it may be possible to adjust the tuning of the tag to compensate. Nevertheless, recovery of the full free space reading range is unlikely to be achievable. This difference is due to power absorption by the material.

In situations where an electromagnetic wave meets a boundary between two dissimilar materials, some of the energy is reflected at the surface and some of the energy passes into the material. The proportion of the energy that passes into the material is a function of its physical properties (known as its dielectric constant). This process is repeated at each boundary between two dissimilar materials.

Where a tag is read through an object, the consequent reduction in the level of signal reaching the tag will reduce its reading range. Some indication of the scale of reduction in reading range caused by different materials is given in Table 1. The figures in the table are based on some informal tests and are illustrative only.

Table 1 — Typical effect of materials on performance

Scenario	Reference	Range – cm	$(R/Ref)^2$	Loss dB
	Distance - cm			
Air	200	200	1,00	0.00
Tag on front of plastic case	200	180	1,23	0,92
Tag on front of plywood sheet	200	131	2,33	3,69
Tag on front of wood block 2.5 cm deep	200	120	2,78	4,44
Tag on front of paper 3 cm thick	200	108	3,43	5,35
Tag on front of empty plastic jug	200	149	1,80	2,56
Tag on rear of empty plastic jug	200	138	2,10	3,22
Tag on front of plastic jug filled with tap water	200	46	18,90	12,77
Tag on rear of plastic jug filled with tap water	200	31	41,62	16,19
Tag behind metal mesh 10 cm × 10 cm	200	28	51,02	17,08
Tag behind metal mesh 1 mm × 1 mm	200	10	400,00	26,02
NOTE: For the purpose of making these measurements the transmit level from the interrogator was set to a constant value.				

Similar effects are evident in tests conducted with real food products as illustrated in Figure 5.

© ISO/IEC 2009 All rights reserved

Copyright International Organization for Standardization
Provided by IHS under license with ISO
No reproduction or networking permitted without license from IHS
Not for Resale

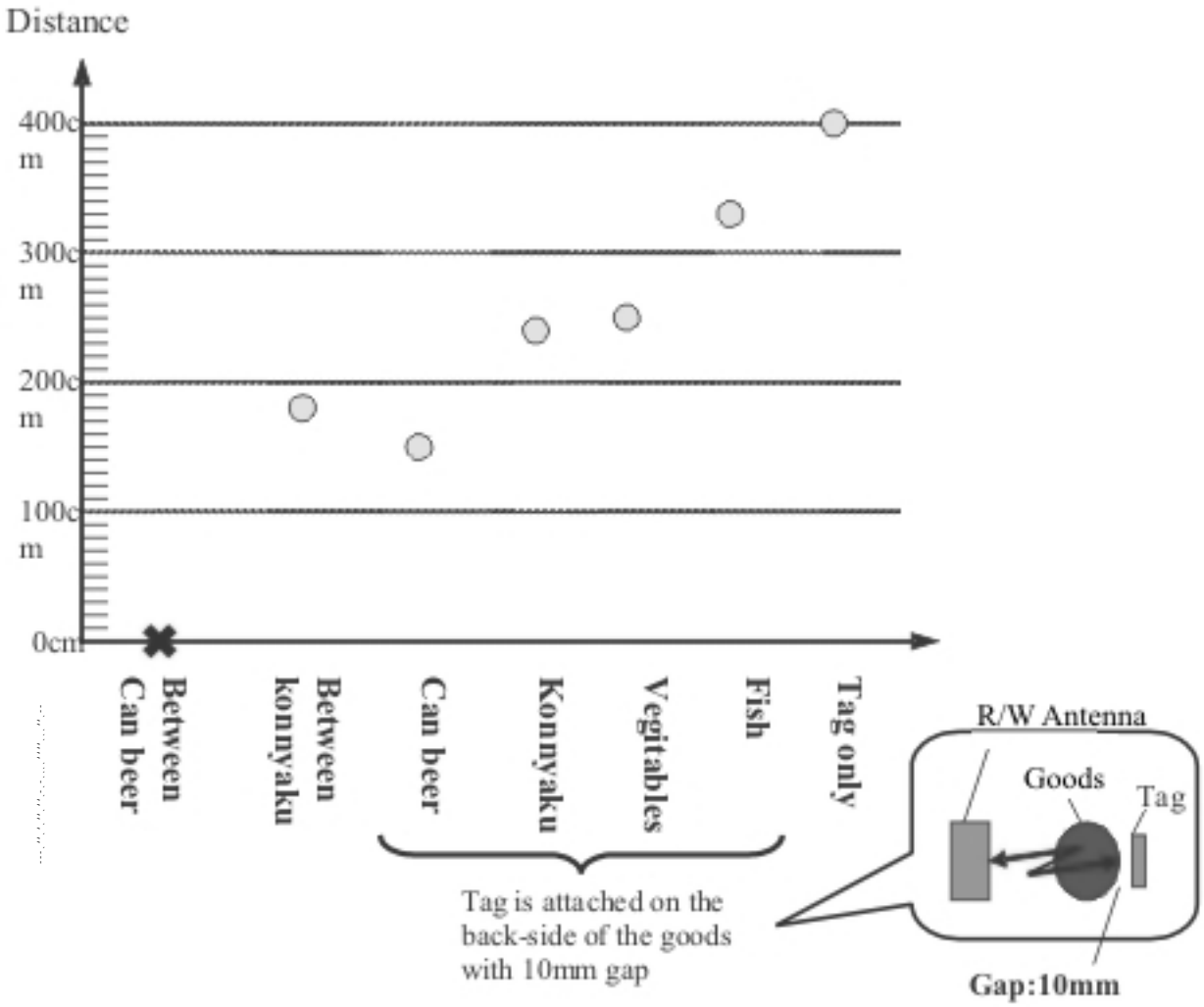

Figure 5 — Typical effect of food products on performance

Effective implementations rely then on an understanding of the above coupled with live testing and system design around the constituency of products and tag positions relative to the reader's antennas.

An associated effect, which can also reduce the reading range of a tag, is its proximity and orientation with respect to other adjacent tags. The effect is greatest where tags are parallel with each other since this produces the highest level of mistuning and absorption. A similar situation arises where a second tag is positioned a short distance behind the first one and in line with the transmission path from an interrogator. The tag nearest to the interrogator creates a "shadow", which reduces the field available to power the tag that is further away.

It is important for end-users to understand and assess the impact of all of the above effects on their application.

5.2 Regulatory Considerations

RFID readers are subject to local regulations regarding frequency, RF power, number of channels, modulation techniques, and other parameters.

© ISO/IEC 2009 – All rights reserved
Copyright International Organization for Standardization
Provided by IHS under license with ISO
No reproduction or networking permitted without license from IHS
Not for Resale

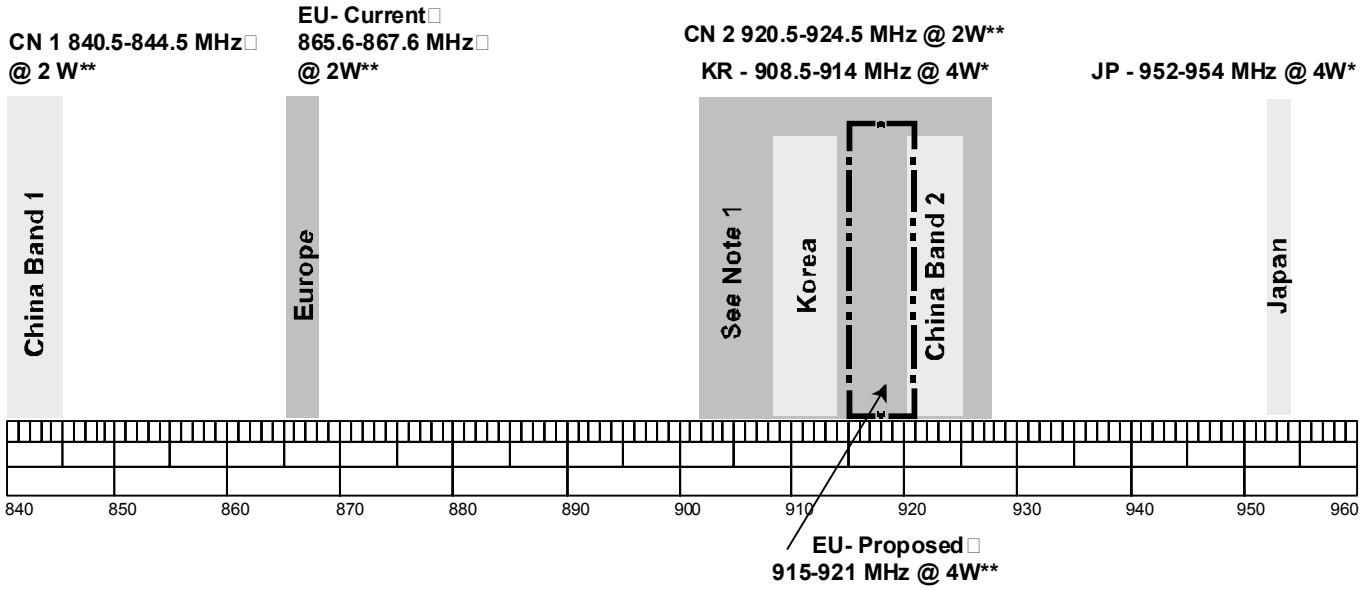

Note 1: US, CA, MX, Chile, Argentina, Peru, Uruguay 902-928 @4W*
Australia_ 920-926 MHz @4W* and 918-926 @1W*
Brazil_902-907.5 MHz @4W* and 915-928 MHz @4W*
Israel_915-917@2W*
Singapore _ 920-925 MHz@2 W** and 866-869@0.5 W**
South Africa _915.4-919 MHz @4W* and 865.6-867.6 MHz @2W**
Thailand_920-925 @4W*

*- EIRP
**- ERP
† - License Required

Figure 6 — Frequency ranges for various regions of the world

For example, in North America, the nominal operating frequencies are 902-928 MHz. Random frequency hopping is required with at least 50 channels. Power is limited to 1 watt with a 6 dBi antenna (4W EIRP). 6 dBi is the maximum allowed LINEAR gain. The difference between the maximum linear gain of the circular polarized antenna strongly depends on its axial ratio: the difference is close to 3 dB if the axial ratio is very low (0 dB) and close to 0 dB if the axial ratio is very high. Readers are allowed to start transmission at any time. No site license is needed. The complete implementation requirements are defined in FCC Part 15.247.

According to the revised ETSI standard EN 302 208-1 v1.2.1 published in April 2008: Interrogators shall operate within the band 865 MHz to 868 MHz on any of the four specified high power channels as illustrated below. The bandwidth of each high power channel shall be 200 kHz and the centre frequency of the lowest channel shall be 865,7 MHz. The remaining three high power channels shall be spaced at equal intervals of 600 kHz. Tags should preferably respond in the dense interrogator mode within the low power channels. A diagram of the channel plan for the band is given below.

This permits RFID use in four of the channels (channels 4, 7, 10, and 13) at higher power transmit at levels, up to 2 Watts E.R.P., only in the following four designated high power channels shown below. Specification of the 4-channel plan included removal of the mandatory requirement for Listen Before Talk (LBT).

- 865.6-865.8 MHz
- 866.2-866.4 MHz
- 866.8-867.0 MHz
- 867.4-867.6 MHz

The maximum continuous transmit on-time on a channel for each interrogator cannot exceed 4 seconds The minimum transmit off-time on a channel for each interrogator shall be greater than 100 msec. There is no restriction on beam-width below 500 mW; above 500 mW beam width subject to the requirements of EN 302 208. This revision included a revised spectrum mask to minimise inter-modulation products in tags. LBT remains as an option.

--`,,```,,,,````-`-`,,`,,`,`,,`---

© ISO/IEC 2009 All rights reserved

Copyright International Organization for Standardization
Provided by IHS under license with ISO
No reproduction or networking permitted without license from IHS
Not for Resale

Development of revised EN 302 208 was driven by:

- The requirement to operate a large number of interrogators simultaneously in the same geographic space
- Need to provide end users with acceptable reading performance.
- With only 3 MHz of spectrum, development of a new approach was necessary.

Benefits to the 4-channel approach include

- Multiple interrogators may transmit simultaneously on the same channel.
- Removal of requirement for “listen before talk” provides users with greater certainty of operation.
- Tag response in the adjacent channels significantly improves reading performance.
- Very spectrum efficient - satisfactory operation by a high density of interrogators in a relatively narrow band (i.e. 3 MHz).
- The 4-channel technique may be directly applicable to other countries, which can designate only limited spectrum to RFID.

Using appropriate techniques, other Short Range Devices (SRDs) can share the same band with RFID.

Operation of RFID in two other sub-bands within the band 868 MHz to 870 MHz is permissible under the ETSI standard EN 300 220. The first of these sub-bands is in the frequencies 869.40 MHz to 869.65 MHz at power levels up to 500 mW ERP. Operation in this sub-band is permitted using either a duty cycle restriction of 10% or LBT. The second sub-band is in the frequency range 869,7 MHz to 870 MHz at power levels up to 5 mW ERP. Due to the low limit on transmitted power in this second sub-band, there is no restriction on duty cycle.

In Japan, the nominal frequencies are in the range of 952-954 MHz with radiated power is limited to 1 watt with a 6 dBi antenna gain, and 9 channels, conforming to the Radio Law of Japan. Transmitters may start only after “listening” for any other device on that channel first. Site licenses are required for fixed readers.

Local regulations should always be consulted before purchasing and deploying UHF RFID readers. Also verify with your equipment supplier that their equipment is certified for use in your area.

6 Site and operating environment considerations

Much of the success of any RFID implementation in logistics applications will depend on deployments that account for the nature of the operating environment. This includes not only the RF characteristics, but also the physical and operational characteristics of the installation environment. The environments in which these systems are expected to operate are generally far more harsh and stressful than typical “office” environments or even the lab and test environments in which RFID technology is typically evaluated. Lab and test environments are often designed to provide a well “controlled” environment to eliminate or mitigate variability in test scenarios. Production environments in logistics are seldom so controlled or predictable, and care must be taken to protect or “insulate” the RFID reader from undue damage or conditions that hinder successful operation. High repair and replacement costs of non-industrial strength readers, along with the decrease in productivity associated with downtime can greatly decrease effectiveness and profitability.

This section will explore factors considered applicable to all reader implementations (fixed or mobile), with additional considerations covered in sections for specific implementations (e.g. Dock Door, Conveyor, Forklift, etc.)

6.1 Site survey

The importance of conducting a thorough site survey cannot be over emphasised. If possible the following points, which are not exhaustive, should be covered. In particular the relevance of each of these points should be considered with reference to the characteristics of the RF environment.

- The construction of the building should be noted including the materials used for the floor and to a lesser extent the walls and roof.

© ISO/IEC 2009 – All rights reserved
Copyright International Organization for Standardization
Provided by IHS under license with ISO
No reproduction or networking permitted without license from IHS
Not for Resale

- A drawing of the site should be obtained.
- The operation of the site should be fully understood including tagged volumes and traffic levels at different times during the day.
- Consider future uses, interference, and performance issues, e.g. today only a returnable container might be tagged and in the future both the RTI and the enclosed items might be tagged.
- The locations of suitable interrogation points should be agreed.
- Any restrictions on the mounting of antennas or the use of shielding must be identified.
- Any restriction on cable runs should be recorded.
- The need for hand held readers or any other portable interrogators should be noted.
- The end user's requirements for tagging of objects must be understood and the effect that these requirements may have on readability should be explained.
- The impact of Health and Safety regulations and other site procedures should be assessed.
- Sources of possible interference should be noted including the possibility of RFID systems in nearby buildings, as well as other RF systems within the area.
- The availability or specification of suitable power points, data points and grounding should be marked up on the drawing of the site.

Any potential issues involved with the installation, including necessary support material, should be highlighted at this stage.

6.2 Radio Frequency Interference

As a radio frequency (RF) based technology, UHF RFID performance is subject to RF spectrum conditions in the operating environment. Other signals in this spectrum (860-960 MHz) can typically be expected to interfere with performance of a given interrogator based on proximity between the two systems, i.e. based on the signal strength of the interfering signal source. Sources for such potential interference can be divided generally into co-located UHF RFID systems and other existing wireless systems operating in this spectrum.

Fortunately the level of interference generated at UHF by most electronic devices is low and is unlikely to cause any difficulties. However there are a number of sources of interference that may adversely affect performance. Typically these include other short-range devices, mobile phones, inter-modulation products generated by some electronic devices such as lighting systems and wideband noise generators such as electric arc welders. The influence of some of these effects may be reduced by shielding and electromagnetic absorption materials.

Less obvious sources of noise may be the consequence of unwanted reflections from the fabric of the building. Other sources of noise may be caused by the movement of people near the interrogation zone or by reflections from loads passing through or close to interrogation zones. The more the transmission from the interrogator can be localised within the wanted interrogation zone, the more these effects may be minimised. The use of a portal arrangement as described in 6.2.2 (Interference to and from co-located or nearby RFID readers) represents a good starting point.

A source of interference not to be overlooked is that from another RFID system operating in an adjacent building. If this is suspected it may be necessary to use a detection device, such as a portable spectrum analyzer connected to a directional antenna, to locate the source. If the source of interference is traced to another short-range device in the area, it should firstly be understood that RFID operates in an unprotected band within the radio spectrum. No operator of an RFID system has any exclusive rights to the use of the band. It will be necessary therefore for the respective end-users to meet and reach agreement on an amicable arrangement whereby they may co-exist.

Figure 7 shows the relationship between channel numbers and multi-interrogator system of the adjacent warehouse. The high power output signals (4 W EIRP) of interrogator will have a probability to cause the interference to interrogator system that is implemented in an adjacent warehouse.

--`,,```,,,,````-`-`,,`,,`,`,,`---

© ISO/IEC 2009 – All rights reserved

Copyright International Organization for Standardization
Provided by IHS under license with ISO
No reproduction or networking permitted without license from IHS
Not for Resale

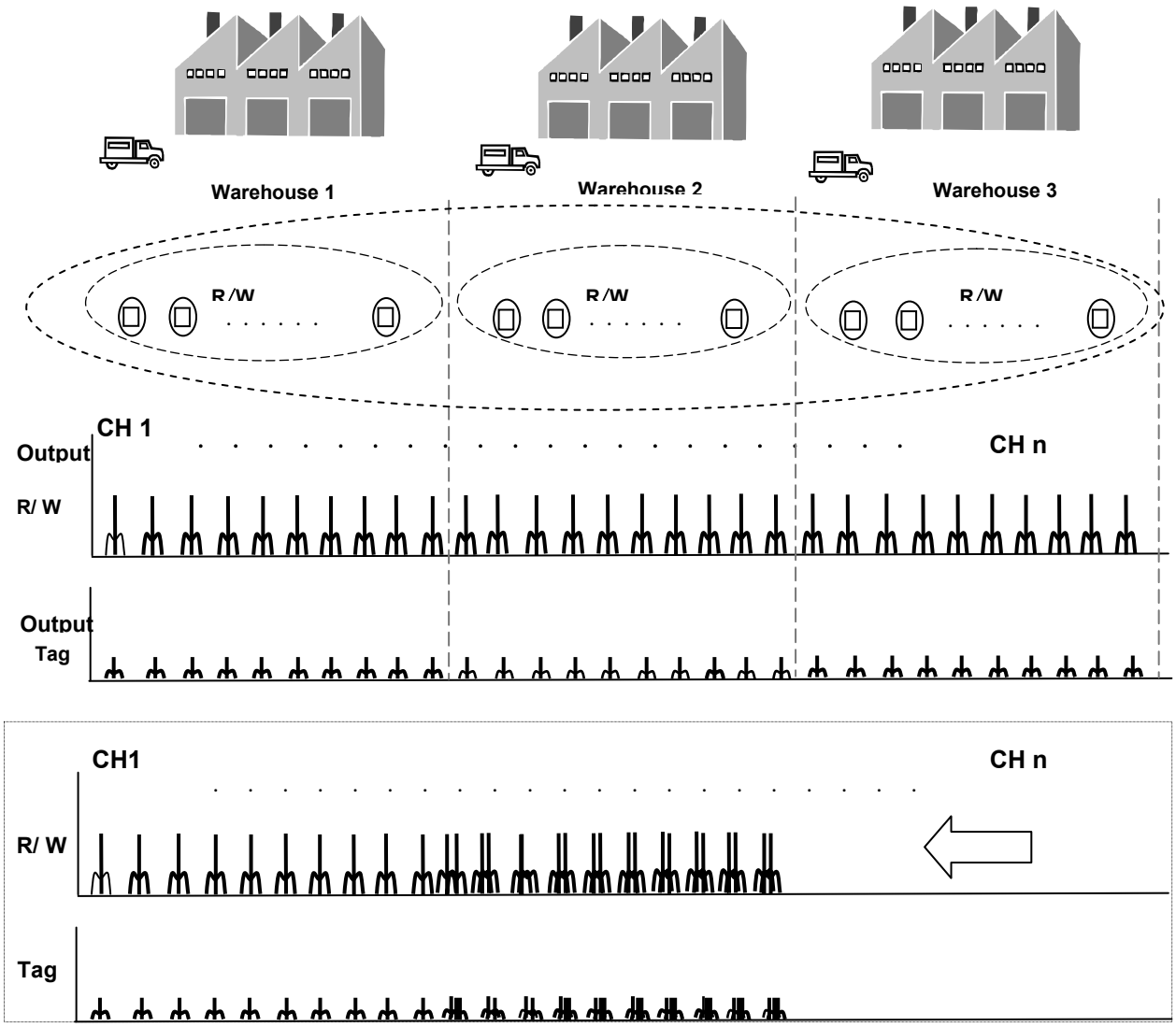

Figure 7 — Relationship between channel numbers and multi-interrogator system

For FHSS and LBT systems we have to know that there is a limitation of the channel numbers that can be available at same time. As described in Clause 5.2, Regulatory Consideration, these channel numbers are different in each country, for example in North America 50 channels, in EU 15 channels for LBT systems and in Japan 9 channels are available at same time. The interference will be caused when the multiple interrogators use the same channel at same time. In logistics applications, many cross-docking warehouses, for example, may require operation of more than 20~30 interrogator at the same time. The Dense Reader Mode function will be needed to avoid or to mitigate the interference for reliable multi–reader operation, especially in EU and in Asian countries. To address these issues, synchronisation of the reader, LBT (Listen Before Talk), Miller Sub-Carrier function and other technologies have been developed.

6.2.1 Interference to and from Existing Wireless Systems

There exist a wide variety of other wireless systems in the 860-960 MHz band of the ISM spectrum that preceded modern UHF RFID protocols; legacy RFID systems are also encountered. And although ISO/IEC 18000-6C RFID systems address the issues of interoperability with legacy systems (listen before talk, etc.) interference remains a major issue for systems implementations.

Common devices typically encountered in logistics and warehousing applications are discussed below. Discovery of such non-RFID systems is the first installation requisite (see 4.1 Site Survey). Resolutions may

© ISO/IEC 2009 – All rights reserved
Copyright International Organization for Standardization
Provided by IHS under license with ISO
No reproduction or networking permitted without license from IHS
Not for Resale

range from implementing adequate RF separation between the competing RF systems to elimination or replacement of competing systems with non-interfering systems.

6.2.1.1 Existing 900 MHz WLAN

Wireless Data Collection systems have been deployed in supply chain operations since the early 1980s. Since the early 1990s, many of these systems in FCC regulated domains (principally the United States) utilise the 902-928 MHz band. With adequate separation between 900 MHz WLAN and UHF RFID systems, both may continue to operate successfully, though at some performance penalty to either or both. This becomes particularly difficult where it could be commonly expected that a 900 MHz WLAN equipped forklift or hand held device crosses through an RFID dock door portal. With typical RFID readers having power output higher (1 Watt) than the typical 900 MHz WLAN device, the most common observable phenomenon is that the WLAN operation is interrupted or disabled. The RFID system may suffer in observed performance.

While adequate separation between systems may present near-term options, expect that any increased deployment of either 900 MHz WLAN or UHF RFID in a given facility will increase problems. Widespread availability of non-interfering 802.11 based 2.4 GHz or 5 GHz WLAN systems present a much more viable, non-interfering strategy.

6.2.1.2 Other Wireless Systems

There are a variety of other RF systems with potential for RF interference, though less likely to be encountered as 900 MHz WLAN as above. These include Narrowband Paging (901-902 MHz) and cordless phones and wireless microphones and headsets operating in the ISM band (902-928 MHz). These systems can be high power (up to one watt) and can be a constant or an intermittent source of interference. The best solution is to replace these systems with newer 2.4 GHz systems.

6.2.2 Interference to and from co-located or nearby RFID readers

6.2.2.1 Tag Activation from Multiple Readers

6.2.2.1.1 Adjacent Doors

The primary issue with adjacent doors is that the two outside vertical antennas can blind each other. Portal designs need to consider the conflicts that can arise from antennas on facing members.

In the example shown in Figure 8, the primary conflict comes from reflections from the main lobe of 2R off of the pallet and forklift into the 1L&R antennas while they are trying to receive the tags signal. Secondary conflicts can come from the side lobes of 2L&R directly to 1L&R. Similar arguments hold for all other combinations of readers systems that are in proximity to each other.

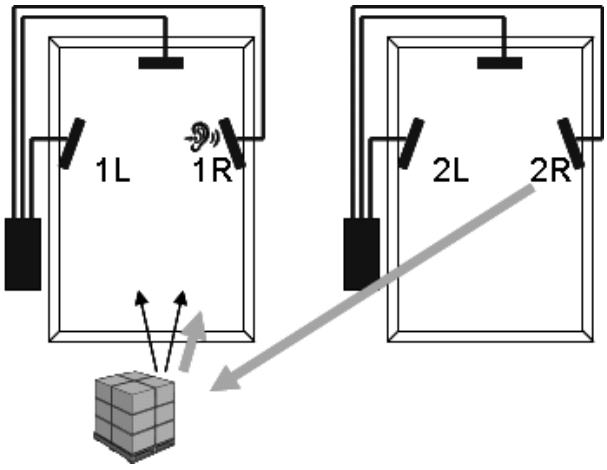

Figure 8 — Adjacent Portal Readers

--`,,```,,,,````-`-`,,`,,`,`,,`---
© ISO/IEC 2009 – All rights reserved

Copyright International Organization for Standardization
Provided by IHS under license with ISO
No reproduction or networking permitted without license from IHS
Not for Resale

Portals will need to be 'tuned' to contain the signal in the appropriate reading area. This can be done through antenna alignment and blocking (absorbing and reflecting) elements.

One popular solution to these problems is Reader Synchronisation. This solution takes advantage of the fact that readers interlace time periods of transmitting (sending) and receiving (listening) as required by the Air Interface Protocol. Many modern reader products have the ability to synchronise transmit and receive windows to control their own antenna matrixes. The ability to synchronise systems of readers to avoid conflicts between systems has not yet been standardised. Therefore mixing readers from multiple manufacturers may cause problems. In this case, synchronisation of reader systems, and interoperability testing need to be performed.

A second solution, instead of shielding, is to analyse all readings (field strength) and to identify which reader read it in software/firmware by statistical/fuzzy rules/algorithms to identify the location and state of the read object.

6.2.2.1.2 Cross Doors

Many cross docking facilities are not very wide, consisting of doors on each side of the facility with an alley way between them. Cross portal contamination could be an issue. Cross door read areas should be limited to the intended door because as the freight is moved through the door undesired reflections can occur in installations employing an overhead antennas. Reflections from the floor are a primary consideration. Interference from handheld and forklift mounted readers are also a consideration. While getting stray reads from the opposite door is unlikely, interfering with the readers is possible.

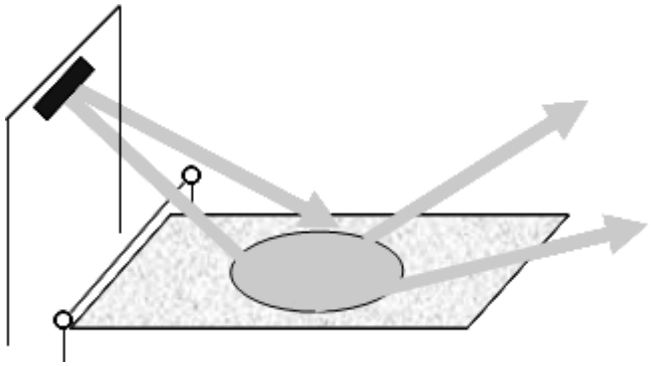

Figure 9 — Overhead antenna reflections

6.2.2.1.3 Primary Polluters

While the emphasis of reader specifications is read range, a practical implementation may focus on less range to limit cross reader interference instead of more coverage.

6.2.2.1.3.1 Main Lobe Pollution

Main lobes are the most powerful and therefore the biggest polluters. The pollution from the main lobes of adjacent doors is a primary problem. In facilities with multiple doors you will have to guard against pollution from the doors affecting carton read points and handhelds.

6.2.2.1.3.2 Side Lobe Pollution

Side lobes are an issue because they are fairly powerful and at roughly 90 degrees to the main lobes making containment more complicated.

--`,,```,,,,````-`-`,,`,,`,`,,`---

© ISO/IEC 2009 – All rights reserved
Copyright International Organization for Standardization
Provided by IHS under license with ISO
No reproduction or networking permitted without license from IHS
Not for Resale

6.2.2.1.3.3 Header Reflections

Reflections from header antennas on portals may be an issue. The reflection off the floor (Figure 9) could be strong enough to pick up stray reads from goods moving through the alley or being picked from tall racking across from the door.

6.2.2.1.3.4 Reflections from Mechanised Material Handling Equipment

Reflection from material handling equipment, such as fork lifts, tugs, Automatic Guided Vehicles (AGVs), etc., pose a particular problem due to the variable nature of their appearance and impact as they move into, and out of, the coverage zone of the fixed reader. The aforementioned site survey should account for, and note the impact.

Mitigation of the impact may be possible through procedural changes to use of the handling equipment to avoid the read zone, repositioning of the reader equipment, or triggering of the fixed reader to avoid the reflections.

6.2.2.2 Reader to Reader (channel to channel) Interference

In environments containing many readers, the range and rate at which readers singulate tags can be improved by preventing interfering reader transmissions from colliding with desired tags responses, either spectrally or temporally. The EPCglobal Class 1 Generation 2 specification describes this as “Dense-Interrogator channelised signalling”, more commonly referred to as “Dense Reader Mode”. The goal of the EPCglobal specification is to facilitate the usage of a large number of readers within close proximity to each other.

6.3 Water and Dust

Logistics and Manufacturing environments often are subject to high levels of dust and water (moisture or humidity). Intrusion of either dust or water into electronic devices introduces high potential for device failure, whether permanent or intermittent. In such environments, the RFID reader should be either itself designed to withstand such intrusion, or housed in an enclosure to provide such protection. What follows are some of the more common ratings and standards frequently used by manufacturers to define a product’s degree of water and dust protection.

6.3.1 IP Ratings (Ingress Protection)

Ingress protection ratings are standards for electrical enclosures. The rating refers to the equipment’s ability to permit solids and liquids to penetrate the enclosure. The protection standards are defined by the (International Electrotechnical Commission) standard IEC 60529:2001. A device’s IP Rating is expressed as a two-digit number (Example: IP-66). The first number designates protection from solids, while the second number designates protection from liquids. Please refer to the table below for specific IP rating information. If a device is truly ruggedized for use in an industrial environment, then an IP rating will be specified. If it is being used in an environment where dust and moisture are prevalent, then the IP rating must be considered. If the IP rating is not specified, then you can assume the device will not be resistant to dust and moisture. Any electronic product being used in a truly industrial environment should have an IP rating of IP-65 or higher in order to be fully protected from dust and liquids. Dust and moisture can cause major problems to internal components. Even if a device is not used in an industrial environment, it can become exposed to levels of dust and moisture that will eventually cause the device to fail. It is important that manufacturers have their equipment certified by an outside laboratory to verify the product’s IP rating. UL and CENELEC are two such laboratories, but many different laboratories exist that provide this service. The important thing is that the product is certified by an outside organization. If IP ratings are specified on a product’s data sheet, then an approval certification number and standard should also be included (Example: EN 60 529 or Approved to IEC 60529). Another important consideration is that every configuration of the product is IP certified, and not just one specific configuration. Many manufacturers will claim a certain IP rating, but this rating is only achieved with one specific and usually expensive configuration. All available configurations should be IP rated for proper protection to allow the customer flexibility when ordering an RFID reader.

© ISO/IEC 2009 All rights reserved

Copyright International Organization for Standardization
Provided by IHS under license with ISO
No reproduction or networking permitted without license from IHS
Not for Resale

Table 2 — IP ratings

Solids - (First Number)		Liquids - (Second Number)	
0	No Protection	0	No Protection
1	Protected Against Objects > 50mm (hands)	1	Protected Against Dripping Water Or Condensation
2	Protected Against Objects > 12mm (fingers)	2	Protected Against Sprays Of Water 15º From Vertical
3	Protected Against Objects > 2.5mm (tools/wires)	3	Protected Against Sprays Of Water 60º From Vertical
4	Protected Against Objects > 1 mm (small tools)	4	Protected Against Water Sprayed From All Directions
5	Protected Against dust, limited ingress	5	Protected Against Low Pressure Jets Of Water
6	Totally protected against dust	6	Protected Against Heavy Seas
7	N/A	7	Protected Against The Effects Of Immersion
8	N/A	8	Protected Against Submersion

NOTE An IP Rating of IP-68 indicates a dust tight device that can withstand total submersion in water.

6.3.2 NEMA (National Electrical Manufacturer Association) ratings

NEMA ratings are standards, defined in ANS NEMA-250, that are useful in defining the types of environments in which an electrical enclosure can be used. The NEMA rating system is defined by the National Electrical Manufacturer Association, and frequently signifies a fixed enclosure's ability to withstand certain environmental conditions. Please refer to the table below for specific NEMA type designations.

Table 3 — NEMA type designations

NEMA Rating	Intended Use and Description
1	Indoor use primarily to provide a degree of protection against limited amounts of falling dirt.
2	Indoor use primarily to provide a degree of protection against limited amounts of falling water and dirt.
3	Outdoor use primarily to provide a degree of protection against rain, sleet, wind blown dust and damage from external ice formation.
3R	Outdoor use primarily to provide a degree of protection against rain, sleet, and damage from external ice formation.
3S	Outdoor use primarily to provide a degree of protection against rain, sleet, windblown dust and to provide for operation of external mechanisms when ice laden.
4	Indoor or outdoor use primarily to provide a degree of protection against windblown dust and rain, splashing water, hose-directed water and damage from external ice formation.
4X	Indoor or outdoor use primarily to provide a degree of protection against corrosion, windblown dust and rain, splashing water, hose-directed water, and damage from external ice formation.
5	Indoor use primarily to provide a degree of protection against settling airborne dust, falling dirt, and dripping non-corrosive liquids.
6	Indoor or outdoor use primarily to provide a degree of protection again hose-directed water, and the entry of water during occasional temporary submersion at a limited depth and damage from external ice formation.

© ISO/IEC 2009 – All rights reserved
Copyright International Organization for Standardization
Provided by IHS under license with ISO
No reproduction or networking permitted without license from IHS
Not for Resale

6P	Indoor or outdoor use primarily to provide a degree of protection against hose-directed water, the entry of water during prolonged submersion at a limited depth and damage from external ice formation.
7	Indoor use in locations classified as Class I, Division 1, Groups A, B, C or D hazardous locations as defined in the National Electric Code (NFPA 70) (Commonly referred to as explosion-proof).
8	Indoor or outdoor use in locations classified as Class I, Division 2, Groups A, B, C or D hazardous locations as defined in the National Electric Code (NFPA 70) (commonly referred to as oil immersed).
9	Indoor use in locations classified as Class II, Division 1, Groups E, F and G hazardous locations as defined in the National Electric Code (NFPA 70) (commonly referred to as dust-ignition proof).
10	Intended to meet the applicable requirements of the Mine Safety and Health Administration (MSHA).
12 & 12K	Indoor use primarily to provide a degree of protection against circulating dust, falling dirt, and dripping non-corrosive liquids.
13	Indoor use primarily to provide a degree of protection against dust, spraying of water, oil, and non-corrosive coolant.

NEMA ratings are rarely applied to mobile devices, and are mainly applied to fixed enclosures. For example, a NEMA rating would be applied to a fixed electrical box mounted outside, or a fixed enclosure used to house a wireless access point. Most enclosures rated for use in an outside environment include a NEMA 4 rating. NEMA ratings have more stringent testing requirements to verify protection from external ice, corrosive materials, oil immersion, dust, water, etc. These stringent testing requirements can rarely be applied to mobile devices, but there is a correlation between NEMA ratings and IP ratings. However, this correlation is limited to dust and water. Table provides a comparison between NEMA ratings and IP ratings. It is important to realise that this comparison is only related to the protection provided against dust and moisture. For this reason, this table can only be used to convert NEMA ratings to IP ratings, but not vice versa. A few manufacturers of mobile computers will include NEMA ratings in their specifications, and it is important to understand how the NEMA specification correlates to a product's IP Rating.

Table 4 — Comparison of "NEMA" type and "IP" rating designations

Conversion of "NEMA" type to "IP" rating designations*

NEMA Type Number	IP Designation
1	IP10
2	IP11
3	IP54
3R	IP14
3S	IP54
4 and 4X	IP56
5	IP52
6 and 6P	IP67
12 and 12K	IP52
13	IP54

* NOTE Table cannot be used to convert "IP" Codes to "NEMA" Types

--`,,```,,,,````-`-`,,`,,`,`,,`---

© ISO/IEC 2009 All rights reserved

Copyright International Organization for Standardization
Provided by IHS under license with ISO
No reproduction or networking permitted without license from IHS
Not for Resale

6.4 Shock and Vibration

The MIL-STD specification is a series of guidelines established by the U.S. Department of Defense in order to define specific performance and manufacturing requirements for all types of equipment. In most cases, products must be designed in accordance with the MIL-STD to be considered acceptable for use by the U.S. Department of Defense. A product's MIL-STD compliance is also a consideration for many state and local governments when purchasing mobile computers for use in public safety, emergency services, maintenance, etc. The MIL-STD 810F standard was released on January 1, 2000 (superseded MIL-STD 810E). MIL STD 810F includes testing protocols to simulate environmental stresses from rain, humidity, salt fog, sand/dust, vibration, shock, temperature, etc. A copy of MIL-STD 810F can be downloaded from the United States Army Developmental Test Command at

http://www.dtc.army.mil/pdf/810.pdf

The MIL-STD 810F standard is an all-encompassing standard that is frequently used for durability testing by mobile computer manufacturers. Many manufacturers and laboratories will design their testing in accordance to the MIL-STD 810F guidelines. However, it is important to note that when the MIL-STD 810(x) specification is listed on a product's data sheet, this usually only applies to the vibration and shock component of the standard, and does not mean that protection is included from salt fog, corrosion, rain, humidity, temperature, etc. Therefore, IP Ratings are frequently used to signify protection from liquids and solids, and the MIL-STD is used to specify protection from shock and vibration. Since MILSTD 810(x) includes many different tests, the manufacturer must state which section of the standard they are using. For example, section 514.5C-3 of MIL-STD 810(x) includes vibration and shock testing parameters.

It is important to pay close attention when manufacturers claim MIL-STD 810F, because vibration and shock testing can be performed on non-operating units, and the units are turned on after the test. The units must be tested while in operation to achieve an accurate performance rating. Also, many manufacturers will include actual testing parameters on specification sheets (Example: 40g Shock, 28g Peak Vibration), rather than claim MIL-STD 810F. This could signify that the testing used does not meet MIL-STD 810F requirements.

6.5 Drop Specification

All handheld or laptop computers should include a drop specification that describes the device's ability to withstand the shock of a fall to a hard surface. For obvious reasons, the drop specification is extremely important for mobile computers and cannot be overlooked. If a device cannot withstand a drop from a reasonable distance, then its life will be extremely short. Most ruggedized handheld computers can withstand a 4-foot drop to concrete.

Another important aspect to consider is the testing procedures used to verify a product's drop specification. A product should be dropped on all sides to verify its ability to withstand shock from any direction. For example, a computer's display can be very sensitive to the shock associated with a drop. The drop test should include all sides to verify that the display and other sensitive components will withstand the shock and operate properly. It is important to pay close attention to the details included with the drop specification, because many manufacturers will claim 6-foot drops to a "hard surface". This can be misleading, because the term "hard surface" is open for interpretation. Concrete is usually the standard surface used for proper testing, and the drop specification should be questioned if this is not clearly stated. It is also important to verify that the standard product meets the drop specification and that a separate protective accessory is not required (i.e. case, rubber boot, etc).

6.6 Temperature

All ruggedized electronic devices will include operating and storage temperature specifications. Industrial strength electronics can be exposed to extreme temperatures, especially if a device is used outside, or in a freezer (cold storage) environment. Cold storage environments usually require that a device operate in -30°C (-22°F) temperatures. Working in the cold is tough for electronic devices; however, for mobile devices in particular, going in and out of the cold that can create the most problems. Extreme fluctuations in temperature create condensation, and condensation can cause computer screens on computers that are not designed properly for the cold to fog up, keyboards to seize up, and internal parts to corrode. And all of the above leads to significant reductions in worker productivity and increases in worker frustration and repair costs.

--`,,```,,,,````-`-`,,`,,`,`,,`---

© ISO/IEC 2009 – All rights reserved
Copyright International Organization for Standardization
Provided by IHS under license with ISO
No reproduction or networking permitted without license from IHS
Not for Resale

6.7 Connectors and Cabling

Use the feeder cables and connectors recommended by the manufacturer of the interrogator. Wherever possible feeders should be run over the most direct and shortest route since this will give minimum radiation from the cable and the least insertion loss. Cables should be run in accordance with the recommended bending radii. Consideration should also be given to the insertion loss of RF cables of different lengths. If it is necessary for feeders to cross mains or data cables, they should do so at right angles.

Connectors should provide effective methods for physically securing contact, so that cables are not disconnected unintentionally. Provision should also be made for strain relief from tension on the cable at points of connection.

Mains and data cables should be protected by means of surge arrestors.

Mains cabling should be run in accordance with local and national regulations. The minimum requirement as far as the user is concerned is the inclusion of Residual Current Devices (RCD).

All cables from interrogators to the computer room should be protected so that they cannot easily be damaged. Where possible interrogator cables and mains cables to the computer room should be run through separate inputs.

All cables should be identified at each end and their details recorded in the installation records for the site.

6.8 Grounding

Grounding is often misunderstood as a key element to good system design and implementation. The mechanical infrastructure in a typical warehouse or industrial facility is often metallic. Many installers assume this metal infrastructure is properly grounded. Paint can cause insulation between metallic structural elements. Dissimilar materials of structural elements should also be understood. Factors such as these can cause voltage differentials at various points along the structure that is assumed to be at ground.

A satisfactory grounding system (e.g. standard earth provided in the building) is an important and often neglected aspect of any installation. It is recommended that the measured earth value should be less than 10 Ohms. However the important feature is that the system should be equipotential across the site.

It is important to ensure that all interrogators are adequately grounded. In addition all portals or antenna mounting structures that are constructed from metal should be bonded to earth at a single point on the structure.

Connections to the site earth (where corrosion may be unavoidable) should be made using sacrificial anodes of a material compatible with the structure being earthed.

Before making any changes to a grounding system, it is important to consult the owners of the site and the relevant electricity supply authority.

7 Fixed RFID Reading Devices

7.1 Dock Door Portals

The term *dock door portal* is used to describe any read point in which objects are moved through a fixed opening, but in a manner that is only loosely bounded. The most common example is from a warehouse into a trailer. The Door and the Trailer are always in the same spot, but objects are loaded (or unloaded) by forklift, pallet mover or by hand. The horizontal position, vertical position and velocity may vary with in the confines of the portal. Typically, Dock Door Portals require higher power and utilise larger read zones than other applications.

© ISO/IEC 2009 All rights reserved

Copyright International Organization for Standardization
Provided by IHS under license with ISO
No reproduction or networking permitted without license from IHS
Not for Resale

Building a series of portals is a much different proposition than building a single portal. There are many variables to consider in the design of a portal. The variables distil to 2 categories; Business / Process needs and RF Propagation. The business process needs will primarily define the system components and placement of the portal. The RF propagation considerations will define the physical design and placement of the portal. With the placement being effected by both criteria, this is where the most compromises arise. For each category to follow we will consider original design, installation validation and ongoing maintenance.

The primary use of portals is to read tags on pallets. The use of portals to read multiple cases on a pallet is a difficult problem as illustrated in 5.1.1.

7.1.1 Typical Dock Door Portal Design

Figure shows a typical portal. Many variations can be made and the diagram does not portend to be inclusive. System Integrators should validate that the business needs are met and the system is adequate for the use and environment.

Figure 10 includes a reader and three antennas, a stoplight and an optical trip wire.

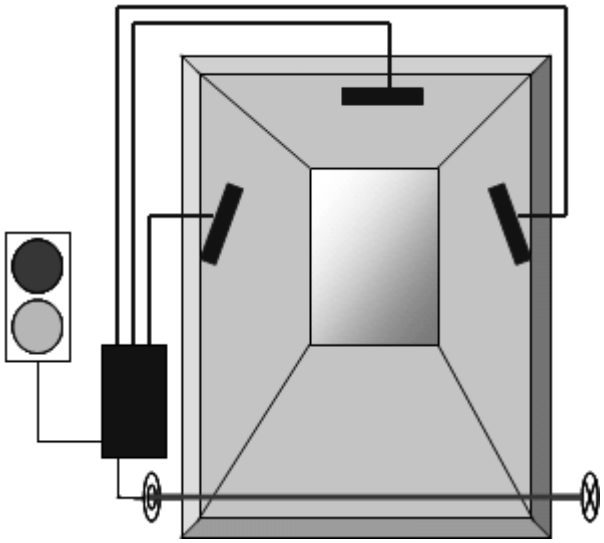

Figure 10 — Typical portal

Figure 11 depicts the coverage patterns resulting from the three antennas. ‘A’ patterns are from the side readers and the ‘B’ pattern is from the top reader. ‘C’ represents the general portal read area and D represents the operational boundary marker.

© ISO/IEC 2009 – All rights reserved
Copyright International Organization for Standardization
Provided by IHS under license with ISO
No reproduction or networking permitted without license from IHS
Not for Resale

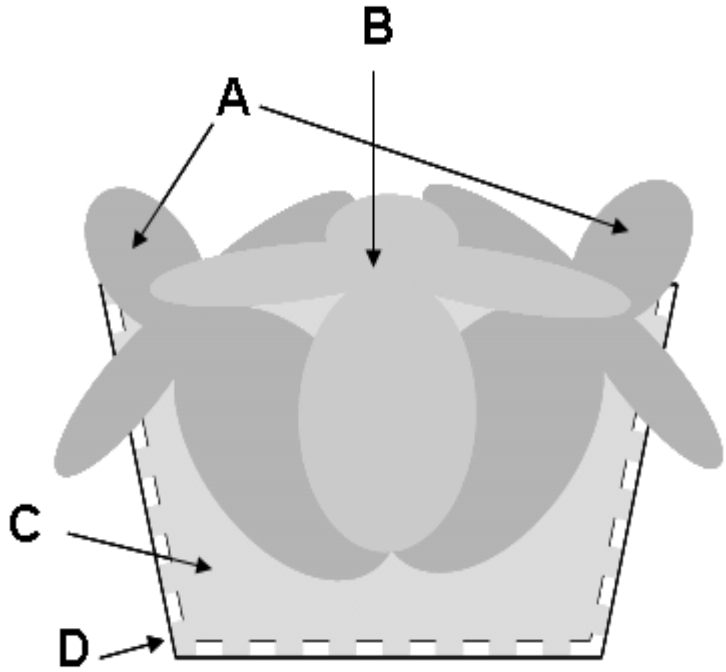

Figure 11 — Three-antenna pattern overlap

7.1.2 Practical Considerations

Marking the portal read area is highly recommended. Marking the portal area will resolve three issues:

- To keep drivers from cutting through the portal area. This problem has two issues.
  - First, the passing pallets could be recorded onto or off of the load.
  - Secondly, once an error of this nature occurs, the business problem of getting it cleared so loading can continue or is accurate needs to be addressed.
- To keep goods from being placed temporarily in the read zone. This produces the same issues as above. To keep handheld / mobile RFID readers from the area, as well as, inform them they may experience interference.

Marking of the boundaries will also aid in the maintenance of the portal, by insuring consistency during the tuning process.

7.1.2.1 Working with Non-Technical personnel

As you work towards implementing an RFID solution you will, at some point, end up interacting with non-technical personnel. These people can be a fantastic resource during your pilots and deployments. It would be beneficial for the management team responsible for implementation to reach out to these people and be very proactive and open with communication about the purpose and goals of the project. These people are most likely the personnel that will work with the equipment daily and they can provide valuable feedback as a project progresses. Failure to keep these people “in the loop” can be disastrous to an implementation. Project planners should keep this in mind as schedules are developed. Training and feedback sessions should be included in project plans. Time spent training these non-technical staff members will pay for itself many times over during the course of a project and beyond.

7.1.3 Business Process Considerations

To accomplish the business goals of the portal system integration will likely include the following:

— A positive confirmation that a read is necessary will trigger the RFID reader. Typically this is done with a motion detector, optical beam trip wire, or a weight plate. The confirming input allows the reader to

© ISO/IEC 2009 All rights reserved

Copyright International Organization for Standardization
Provided by IHS under license with ISO
No reproduction or networking permitted without license from IHS
Not for Resale

only turn on the RF field when necessary. In certain international markets this will enable meeting regulatory duty cycle requirements.

— An Optical indicator for human feedback of status. The confirmation needs to be timely as well as obvious. This can be combined with audible signals if the environment makes it useful. Typically a stoplight, 'red problem, green go' is a useful indicator. Applications may also use more complex feedback devices such as signboards and counters.

— A mode switch may also be useful to allow the users to control the function of the portal without accessing a computer interface. Examples of such needs are:

— To indicate the direction of the flow of goods through the portal. If a portal reads a tag twice, was the pallet put on and taken off? Or was the driver just jockeying the pallet during the loading of the tail of the trailer?

— To change the mode from using a motion detector to being always On or to turn the portal Off so that a handheld scanner can be used in the area.

This document does not portend to list specific minimum requirements for a reader. The system integrator or designer needs to insure that the readers chosen have enough I/O to provide local control of the necessary peripherals.

7.2 Open conveyor read points

7.2.1 Horizontal separation vs. power

Care needs to be taken when planning and operating read points on open conveyers. The primary interference, from other open conveyor read points, can be cured by space or shielding.

Figure 12 illustrates test results are from a reader certified under FCC Part 90. Part 15 "unlicensed" operations specifies a maximum of 4 Watt EIRP using a 6 dB gain antenna (nominally 1 W) with a single circularly polarised antenna with a 7.5 dB gain and a 65 degree beam width. It is inherently assumed that it satisfies the regulations which says that the antenna must have 6 dB of gain because common notion is that CP antenna gain - 3 dB = its linear gain.

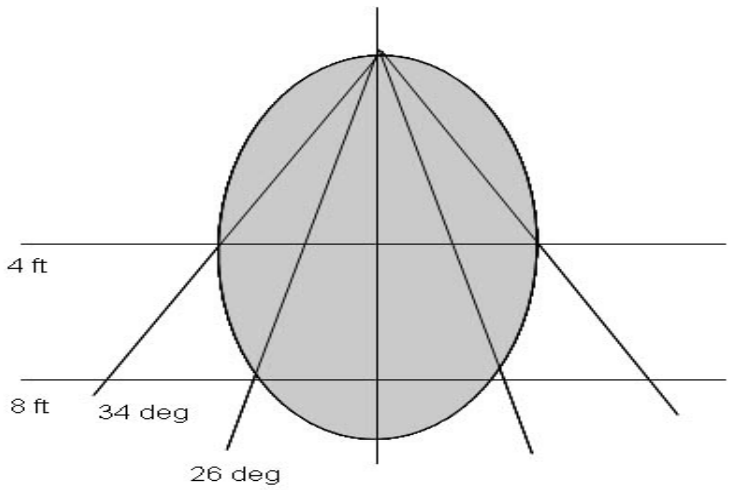

Figure 12 — Antenna beam width

Reader performance will improve with new generations of standards and technology. Verify the above read zone information from reader manufacturer.

© ISO/IEC 2009 – All rights reserved
Copyright International Organization for Standardization
Provided by IHS under license with ISO
No reproduction or networking permitted without license from IHS
Not for Resale

Successful 100% read rates were obtained to roughly 2.5 metres across a 2.15 metres span and 50% read rates to roughly 3.4 metres. Reads were almost nonexistent beyond 3.6 metres. The specified beam width was obtained at 1.2 metres. The tags used were ISO/IEC 18000, Type B not EPC and only specified to 3 metres.

Given the improved range claims of EPC tags and the distance required to span a conveyor substantial power reductions could be considered. A maximum of 25% of the maximum power is a recommended starting point for read point setup. (nominally 250 mW).

Without a reduction in power or spacing, reader synchronisation (see 6.2.2.1.1) or shielding (see 9.5) will be required to insure no erroneous reads, as well as, interference with other readers.

7.2.2 Mounting of antennas

7.2.2.1 Polarization

Polarized antennas are used to enhance read range in certain applications. Figure 13 depicts horizontal and vertically polarized antennas and marked cartons.

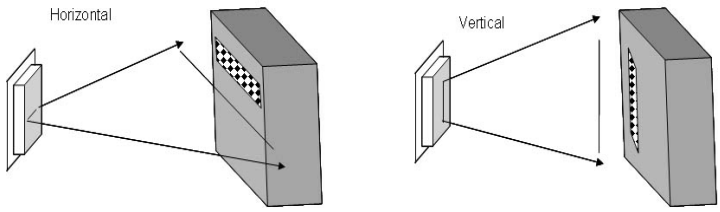

Figure 13 — Antenna polarization

Polarized antennas work well ONLY in their associated plane.

Internal sourcing application may be able to take advantage of orientation and therefore polarization. Readers in supply chain applications cannot assume a tag orientation. Once the carton is in the supply chain orientation is typically not maintained. Therefore, circularly polarized antennas should be used. Circularly polarized antennas work equally well in both planes.

7.2.2.2 Location and Configurations

7.2.2.2.1 General

Figure 14 through Figure 18 presume a best practice of a reader multiplexed with one or more antennas.

7.2.2.2.2 Oriented

If one can be certain of the orientation a single antenna focused on the face of the carton with the RFID label will be the simplest implementation.

--`,,```,,,,````-`-`,,`,,`,`,,`---
© ISO/IEC 2009 – All rights reserved
Copyright International Organization for Standardization
Provided by IHS under license with ISO
No reproduction or networking permitted without license from IHS
Not for Resale

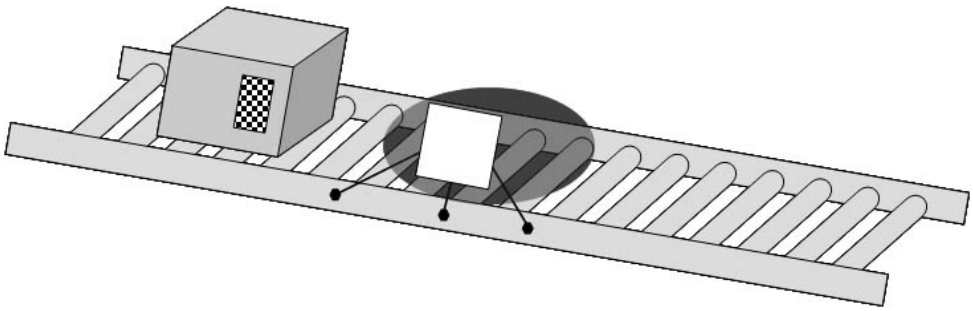

Figure 14 — Oriented carton on conveyor with single antenna

7.2.2.2.3 Partially Oriented

Many handling systems can maintain top and bottom orientations. This allows for implementations of readers and antennas designed to read the vertical faces in 360 degrees.

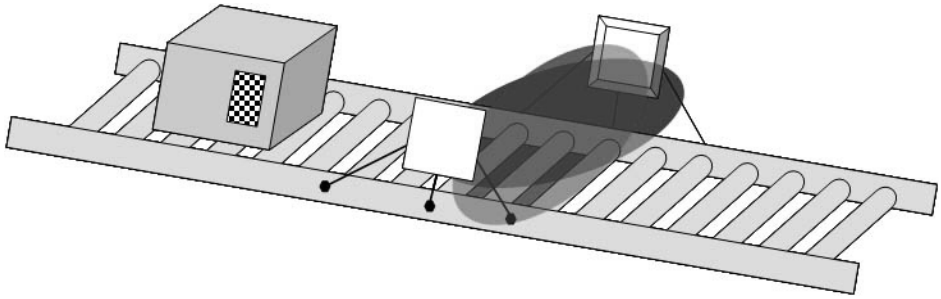

Figure 15 — Partially oriented carton on conveyor with two antennas

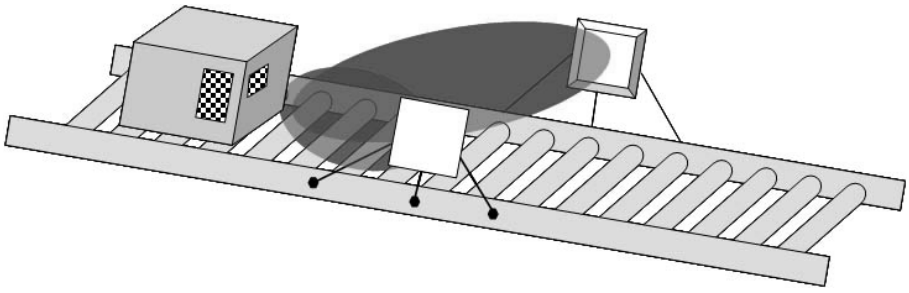

Figure 16 — Partially oriented carton on conveyor with two antennas biased to front reads

© ISO/IEC 2009 – All rights reserved
Copyright International Organization for Standardization
Provided by IHS under license with ISO
No reproduction or networking permitted without license from IHS
Not for Resale

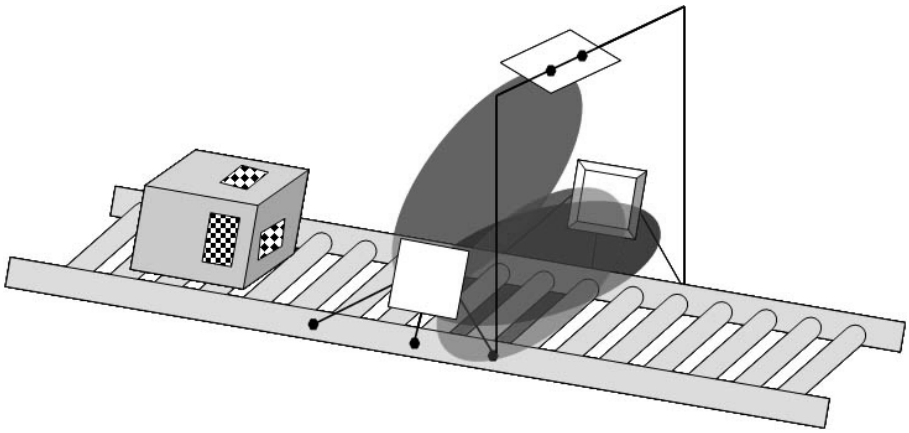

Figure 17 — Partially oriented carton with 3 antennas biased to front & top reads

7.2.2.2.4 Un-oriented

In an un-oriented material handling system readers and antennas will be required to provide coverage of all six faces.

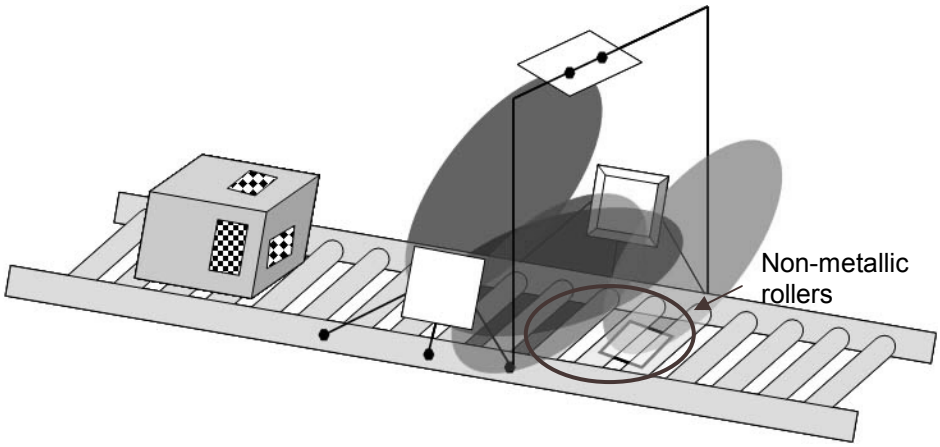

Figure 18 — Un-oriented carton with 4 antennas

7.2.3 Considerations

7.2.3.1 Stray signals

Stray signals from carton read points are not nearly as problematic as dock door portals, due to the smaller space requirements allowing for reduced power output. Readers mounted openly on conveyors are constrained by all of the issues in dock door portals, just on a smaller scale. Difficulty with implementations should not be a problem, for "low density" situations.

7.2.3.2 Singulated reads

I/O considerations for readers used in carton read point configurations are similar to those used in portals. Carton read points require the reader to have an additional output, which can signal the ‘system’ as to when the reader has been unable to successfully read an RF tag on a carton positioned before the reader. This allows for the ‘system’ to divert the packages for recycling until a proper action is noted.

© ISO/IEC 2009 All rights reserved

Copyright International Organization for Standardization
Provided by IHS under license with ISO
No reproduction or networking permitted without license from IHS
Not for Resale

7.2.3.3 Optimisation

Many carton read points may require a reading strategy that allows for the interlacing of several variables. These variables are Power Levels, Tag Protocols, and Tag Frequencies.

7.2.3.4 Modification of existing equipment

Many installations may consider modification to existing conveyors at the read points. The removal of metal components for composite materials should be considered. The composite materials need to be selected to minimise static electricity discharge.

7.2.3.5 Singulation expectations

Functional systems that execute read or write operations may require tag separation and a minimum duration within the reader/writer field when tags are moving. A concise system time audit should be done prior to the design of the reader/writer system.

Implied in these specifications is the requirement for the underlying data collection system to be able to respond in an appropriate time frame.

8 Mobile RFID Reading Devices

The portability of Handheld and Forklift mounted RFID readers pose both operational and interference issues.

Fixed Readers: The physics and dynamics of the read zone are relatively well defined and static. Tagged products move through this defined zone. Assumption is typically that 100% of what enters this zone is valid (and intended) for responding to the reader (filtering and other data sorting dynamics aside).

Mobile Readers: The physics and dynamics of the read zone can vary significantly as the reader and antennas are moved through a dynamic environment. There is much less control of what tags fall within the available read zone of a mobile reader. Considerable thought and planning are required to arrive at a solution, at any given read instance, that accurately captures (includes) tags that are desired versus those which are not desired. This can place a much higher emphasis on a variable solution (antenna pattern or selection, variable power, etc.), which comprehends the data capture context at any point.

If the goal is 100% inclusion of desired reads and 100% exclusion of undesired reads, either operational measures must be taken on the part of the operator or process to ensure that only intended tags fall within the interrogation zone of the reader or some combination of discrete antenna design coupled with software will be necessary to produce desired results.

With this in mind, it is also more critical that there are good operator feedback mechanisms (audible or visual) to account for reads of tags.

8.1 Hand Held RFID Readers

Typical applications for hand held RFID readers, either integrated or tethered, are based on directed pointing and triggering of the reader / antenna by the operator. The operator must have clear understanding of the data collection objectives, interrogation zone and success or failure feedback. Some sample applications in use and their data collection requirements include:

Exception handling (replacing damaged cases)

- Need to identify which cases are being removed
- Need to identify location or pallet load to which damaged cases are being located
- Need to identify which cases are being used for replacement product

© ISO/IEC 2009 – All rights reserved
Copyright International Organization for Standardization
Provided by IHS under license with ISO
No reproduction or networking permitted without license from IHS
Not for Resale

Case to Pallet Association (cases in a location)

- Need to identify pallet to which cases will be associated
- Need to identify each case as it is placed on the pallet and update the status of inventory

Product Verification (confirm identity of a pallet load)

- Need to identify pallet in question and WMS displays contents of pallet load

Inventory of Items or Cases

- Need to aggregate tag reads into inventory database

Locate a given Item or Product within a group

- Need to guide operator to close proximity with reads and feedback (“Geiger counter”)

It should be evident from the above examples that each has very distinct requirements for singulation and/or reads of multiple tags in a variety of spatial arrangements. Some representative illustrations are depicted below:

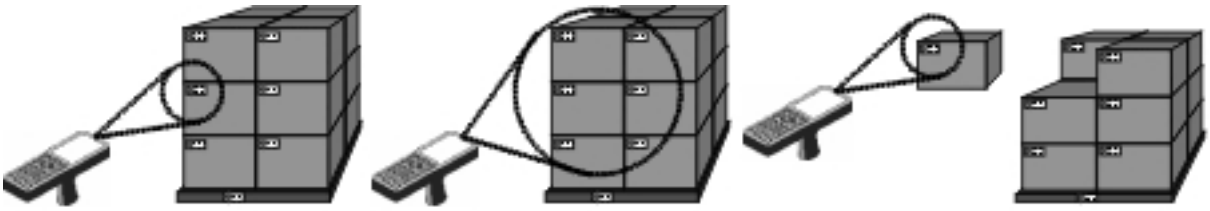

Figure 19 — Singulation and spatial arrangements

Success will depend on proper integrated use of antenna pattern, reader output power and software protocol usage and direct operator involvement with the data collection process.

Unlike fixed interrogators, the location of handheld readers within a site is indeterminate and furthermore they may be pointed in any direction. Another characteristic is that in many applications handheld readers will be used only intermittently. For example where it is necessary to read only a single tag, the interrogation time will be significantly less than the physical handling time.

Not all applications using handheld readers will lend themselves to this approach. For example situations may arise where the operator wishes to scan a number of tagged items - such as a collection of tagged clothes on a display rack.

8.2 Forklift/Vehicle Mounted RFID Readers

In warehousing logistics operations, most movements of full pallet loads are made by forklifts or similar material handling equipment. This material handling equipment presents unique challenges for RFID integration. The particular environmental stress to which these operations subject any electronics represents the extremes of factors outlined in Sections 4.3 to 4.6. Equipment including readers, antennas, and any other electronics should be selected accordingly.

Desired interrogation zones typically include the load carrying area of the equipment in front of the lift hydraulics. Consequently, it is desirable to place antennas in front of the hydraulic mast, which otherwise presents an obstacle to reading tags in this area. This also tends to require the reader to be located in front of the mast as well. This minimises the length of antenna cables and, thus, signal-loss over the length of the cables.

© ISO/IEC 2009 All rights reserved

Copyright International Organization for Standardization
Provided by IHS under license with ISO
No reproduction or networking permitted without license from IHS
Not for Resale

Power and host communication provisioning will likely require co-ordination with the lift manufacturer to facilitate routing such cables through the mast hydraulics.

An illustration of this is shown in the figure below:

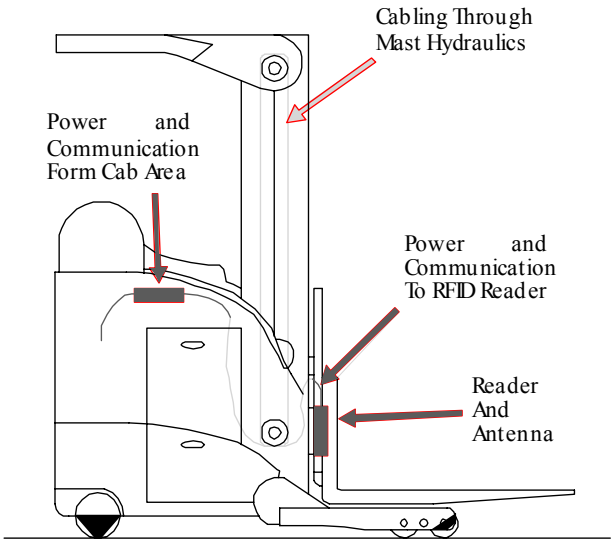

Figure 20 — Forklift mounted reader

In most of these full pallet moves the data collection requirements are simplified to the recording of the move of a specific pallet to some designated location. Most often, the individual cases or contents of the pallet load are already aggregated in a logical data base record linked to a load identifier. If the integrity of the pallet load can be assumed, then it is only required to read a tag that can uniquely identify the load, and so it is not necessary to read every tag on the load. This scenario is depicted in the figure below.

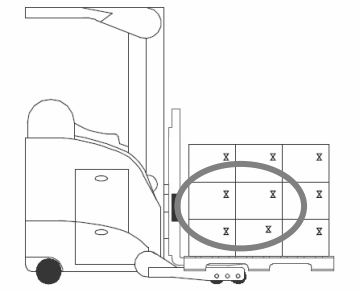

Figure 21 — Forklift reader and association of one tag to entire load

However, if the prior assumption is invalid, a more comprehensive selection and positioning of antennas, to cover the load area, is required, similar to the requirements illustrated in a portal.

Where the data collection task of location is required, it is possible to identify pallet locations in racks, for instance, by tags placed in fixed locations relative to the physical pallet position. These tags must typically be packaged to avoid coupling of the RFID tag energy to the metal racking supports. This scenario is depicted in the figure below.

© ISO/IEC 2009 – All rights reserved
Copyright International Organization for Standardization
Provided by IHS under license with ISO
No reproduction or networking permitted without license from IHS
Not for Resale

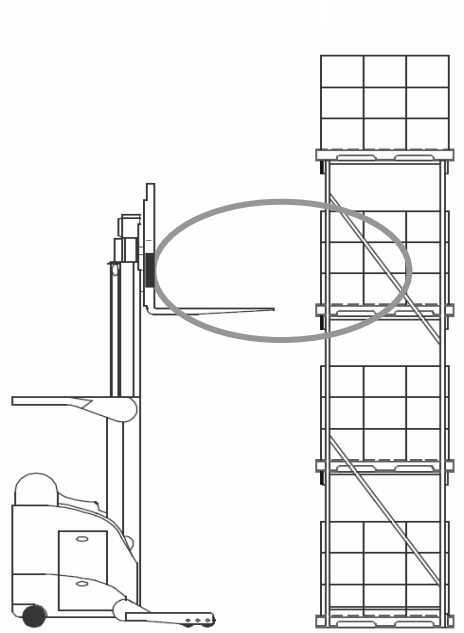

Figure 22 — Forklift reader and pallet locations

8.3 As a source of Interference

Mobile devices are variable interferers due to their mobility. Instruction will need to be given to the operators as to the areas of use and to be conscience of the areas and activities behind the target of their work.

Handheld and forklift reader use should be avoided in active portal areas or in proximity of open read points.

8.4 As a subject of Interference

Mobile readers will experience interference while operating inside the read zone of a portal. System design consideration should be given to the type of 'positive conformation' (see Free Standing Portals above) employed should the need for handhelds in portal areas be necessary. Possible consideration should be given to having an Off/On switch for the portal.

Handhelds should experience very little interference from carton read points that are designed properly and contain their signals. However, there will likely be a zone in close proximity, a few feet, to any carton read point in which handhelds will experience interference. Support of Dense Reader Mode in ISO/IEC 18000-6c environments by both the fixed and mobile readers should sufficiently mitigate such interference.

9 Implementation

Generally, antenna selection and placement should be designed to focus RF energy in the physical space in which the RFID tags are expected to be presented when reads occur. But many other factors such as tag and antenna orientation, RF characteristics of the products or packaging on which the tags are placed, speed of movement, if any, of the tags through the field as reading is attempted, reflections from surrounding materials and environment, etc, can effect tag reading success. Also to be considered should be any required necessity to exclude undesired reads in areas peripheral to the intended area. For this last factor in particular, careful combined testing and selection of antenna pattern, reader output power, shielding of the target area and "tuning" of parameters such as persistence and filtering may be necessary to achieve a robust solution.

© ISO/IEC 2009 All rights reserved

Copyright International Organization for Standardization
Provided by IHS under license with ISO
No reproduction or networking permitted without license from IHS
Not for Resale

9.1 Basic System Approach

Begin by reviewing the distances between the antennas of the interrogators. This should include consideration of anything that might influence the radio path, such as partitions or reflective surfaces. An assessment should then be made of the risk of interference between interrogators taking into account the transmitted power levels and the sensitivity of the tags. In particular care must be taken during the planning stage to ensure that, during normal operation, tagged items to be read by one interrogator will not pass sufficiently close to other interrogators to cause unwanted readings. Also if two interrogation areas are located side by side it may be possible for the interrogator in one interrogation zone to read the tags passing through the adjacent interrogation zone. Possible portal designs to mitigate these situations are covered in Clause 6.2.2.

Figure shows the basic relations of two antennas' orientation that are the face-to-face state (θ=0) and the parallel state (θ=90).

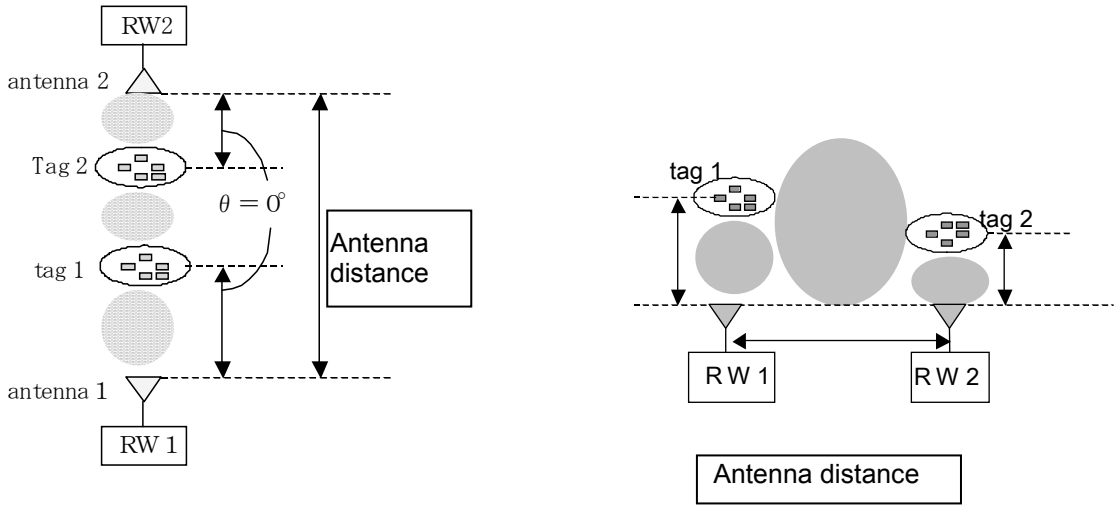

NOTE Two antennas are in face-to-face state(θ=0). Two antennas are in parallel state (θ=90).

Figure 23 — The effects of the orientation of two antennas mounted in the near field

Through the reading test, the impact of the orientation of antenna to the reading rate was evaluated. The tag reading rate was improved from the average: 10% (at face to face state), to the average: 60% (at parallel state). This result means that to reduce or mitigate the interference from other interrogator, we have to take account not only the distance between interrogators, but also the orientation (the direction of radiated power) of the antenna. See the details in annex documents.

Next, it is essential to obtain from the end-user details of the maximum number of tags on a load and the highest speed at which loads will travel. Knowing the beam-width of the antenna, the highest speed should be used to determine the minimum time for which the load will be present in the interrogation zone. This time should be compared against the anticipated reading rates for multiple tags. In some applications it may be necessary to verify these predictions with some practical tests. If it is impossible to read all of the tags in a load within the time available, it will be necessary to discuss with the end-user acceptable means either to reduce the speed of movement of the load or reduce the maximum number of tags in a load or to consider re-configuration of the antennas.

In addition it is important to consider the design of the interrogation zones. Maximum capacity will be achieved across the whole system where the transmission time at each interrogation zone is kept to a necessary minimum. The activation of each read operation may be initiated by some form of trigger. For example the read operation might be triggered by a passing load as it breaks a light beam.

Interrogators should cease transmitting as soon as reasonably possible once they have completed reading the tags on the load. There are a number of means by which this might be implemented. For example a second trigger device might be fitted on the exit side of each interrogation zone. Alternatively the software in the

--`,,```,,,,````-`-`,,`,,`,`,,`---
© ISO/IEC 2009 – All rights reserved
Copyright International Organization for Standardization
Provided by IHS under license with ISO
No reproduction or networking permitted without license from IHS
Not for Resale

interrogator might be configured to cease transmission a set period after it was initially triggered. A third approach could be for interrogators to stop transmitting a specified period after they had ceased to read any further tags. Typically this period might be of the order of 100 ms, although the actual figure will be application specific.

9.2 Antenna selection and configuration

The configuration of antennas will be highly dependent on individual applications. The present document therefore is able only to provide broad guidelines on the subject. The scope of guidelines for antenna selection and installation given in this document is limited to readers with combined transmit/receive ports (where the same antenna transmits and receives).

It should be appreciated that transmissions at UHF are capable of travelling over considerable distances. To minimise the risk of interference with other nearby systems, the beam-width selected for antennas should be no greater than is required for the application. Similarly, where it is feasible to do so, the power transmitted by the interrogator should be limited to no more than is necessary for satisfactory operation. Of course other factors may also influence the choice of antenna. For example some applications may require the antenna to be kept to a minimum size or there may be severe constraints on cost.

In applications where interrogators are required to read single tags, or a small number of tags grouped closely together, the operation can usually be performed using only one antenna. This may well apply for example in the use of hand held readers or to antennas mounted on forklift trucks. Similarly there may be a requirement to read tagged items moving along a conveyor. For such applications often it will be convenient to mount the antenna overhead and place a tag on the top face of each item. This will enable the transmission from the antenna to be directed downwards onto the top of the passing items.

The situation is more complex for fixed interrogators that read large loads containing multiple tags in random orientation. Here it is frequently necessary to position a number of antennas at points that optimise the probability of reading the tags in their various positions on the load. Many manufacturers supply interrogators that are capable of driving multiple antennas by means of multiplexers. These drive each antenna in turn in accordance with a pre-arranged sequence that is configurable.

An example of an antenna configuration to read loads as they pass through a control point is shown in Figure . The configuration consists of two pairs of circularly polarized antennas placed one above the other on either side of the path of the load. As the load passes through the interrogation zone the tags are subjected to transmissions from a variety of directions, maximising the opportunity for their detection.

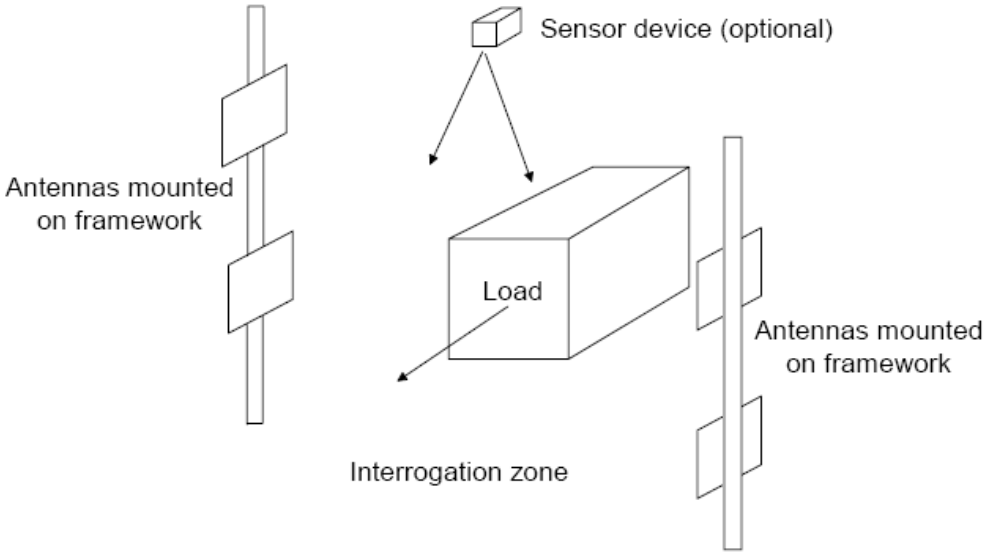

Figure 24 — Antenna configuration for an isolated control point

© ISO/IEC 2009 All rights reserved

Copyright International Organization for Standardization
Provided by IHS under license with ISO
No reproduction or networking permitted without license from IHS
Not for Resale

In certain applications it may be desirable to provide some form of indication to the operator that the interrogator is in a ready state and a further indication that the read operation has been successful. This may be achieved for example by means of either audible or visual signals.

There may be situations where the direction that the load passes through the interrogation zone is important. It this is the case, it may be necessary to incorporate sensors on both sides of the interrogation zone in order to determine from which side the load is approaching. It is important to remember that in areas with a lot of movement, directional sensors can be confused.

Where an interrogation zone is sited in a remote location, the possibility of interference with other interrogators on the site is low. It should be noted however that there might be sources of noise from other devices in the area. (See Clause 6.2.1.) If the risk of interference at the interrogation zone is believed to be low, no special precautions are necessary.

In situations where interrogators are sited close together, there is a significant risk of interference between them. To minimise these effects it may be necessary to consider specialist techniques, such as the use of antennas with a narrow horizontal beam-width and electromagnetic absorbent materials.

A disadvantage of an antenna with a narrow horizontal beam-width is that it reduces the width of the interrogation zone. Thus for an antenna with a narrow horizontal beam-width the time available in which to read the tags on a load is less than with a wider horizontal beam-width. This may place a restriction on the speed at which loads may travel or on the maximum number of tags on a load. It may also restrict the ability to read tags that are mounted in non-preferred orientations.

9.3 Antenna Positioning

Wherever possible fixed antennas should be mounted such that the radiation path is clear of any significant metalwork. Failure to do this will lead to a reduction in the gain of the antenna and a consequent reduction in the range at which tags may be read. Care must also be taken to ensure that any nearby metalwork does not cause unwanted reflections, e.g. by the use of electromagnetic absorbent material. In certain applications it may be necessary to protect the front of the antenna with a suitable RF transparent material.

9.4 Outside Antennas

Antennas that may be exposed to outside conditions, such as at dock doors, must be sufficiently robust to survive the environment over a number of years. Where necessary they must be protected against strong winds and must be resistant to rain and high humidity. The outer casings of the antennas must be made of a material that will withstand prolonged exposure to ultra-violet light. They must also be capable of operating satisfactorily over the anticipated temperature range. In addition it may be prudent to include some form of protection against lightning. Unless guidance on lightning protection is provided in the manual for the interrogator, the manufacturer of the antenna should be asked for advice.

Weather conditions may be the cause of a reduction in system performance. This may be particularly evident where antennas are sited at an entrance to a building. A reduction in reading range will often be observed in damp or foggy conditions.

All external connectors to the antenna should be suitable for outside use, e.g. either protected against humidity or waterproof. For example they may be protected by means of PolyIsoButylene (PIB) self-amalgamating tape. Particular attention should also be paid to the shedding of surface water.

9.5 Shielding

A particular difficulty with systems operating at UHF is that the signal transmitted by an antenna may extend over a significant distance. Situations may therefore arise where tags outside the wanted interrogation zone may inadvertently be activated. The responses from these unwanted tags may be read by the interrogator and passed to its host. It is important for installers to be aware of this problem and ensure that the size of the interrogation field is the minimum necessary and does not extend into areas that may contain unwanted tags. This requirement may create particular difficulties in situations where adjacent interrogation zones and storage

© ISO/IEC 2009 – All rights reserved
Copyright International Organization for Standardization
Provided by IHS under license with ISO
No reproduction or networking permitted without license from IHS
Not for Resale

areas are physically close to each other. One technique that may be used to contain the interrogation zone is shielding. There are two possible approaches, which are:

— reflection of the transmitted signal;

— absorption of the transmitted signal.

The reflective approach involves placing an electrically conductive surface in the path of the transmitted signal. The radio signal is unable to pass through the conductive surface but instead is reflected off it in a similar manner to light reflected off a mirror. While this stops the transmitted signal from passing into the unwanted area, consideration must be given to the likely destination of the reflected signal. Since very little power is dissipated in the reflection process, the reflected signal may bounce off yet further surfaces and end up in unwanted areas. It has also to be remembered that reflections may create holes in the field (due to standing wave nulls), which may prevent the activation of wanted tags. Not all situations are therefore amenable to the use of reflective materials.

Materials with good properties of electromagnetic absorption may assist in overcoming the problems of unwanted reflections. As the transmitted signal passes into the absorptive material its energy is largely dissipated. What energy remains either passes through the material or is reflected by it to emerge at much reduced levels. If electromagnetic absorption materials are used, it is important that the material selected is of the correct thickness and suitable for the intended frequency. Materials with phase shifting properties may also provide a means to reduce field levels but they should be used with great care. Correctly applied, electromagnetic absorbent materials will help overcome the problem of reading unwanted tags outside the interrogation zone. The reduced reflections will also lower the ambient signal level within the installation, which will assist the operation of multiple interrogators.

Reflective materials have the advantage that they are low cost. A thin metal sheet works well although it is also possible to achieve a very acceptable performance using wire mesh materials. Absorption materials are significantly more expensive and less robust. Furthermore in outdoor applications it may be necessary to protect them from the environment, which may reduce their efficiency. However in situations where the presence of reflected waves is not acceptable, absorption materials may provide the most satisfactory technical solution.

9.6 Commissioning the System

It is essential that the system is set to work in a thorough and logical manner. Before starting a plan should be prepared listing the steps in preferred sequence necessary to commission each interrogator and its associated equipment. Suitable paperwork should be prepared to record the key set-up conditions for all equipment forming part of the installation.

Since each site is different it is impossible to describe every eventuality. This section should therefore only be used as a general guide. These commissioning procedures are only for interrogators and their associated equipment. They do not include the equipment in the computer room or the process of setting to work the full system.

The commissioning of the interrogators may be undertaken prior to installation, either on site, or at the premises of the solution provider, as laid down in the agreement.

Once the equipment has been installed in many cases final adjustments will be necessary to meet the specific requirements of the site. These may arise as a consequence of environmental considerations, performance objectives, antenna alignment and regulatory compliance. These adjustments may require the use of a laptop for connection to individual interrogators.

Although this list is not exhaustive, commissioning may cover the following activities:

— Adjustment of settings to the transmit power of the interrogator. Note that this may vary across antenna ports to accommodate differences in antenna cable lengths.

— Adjustment of settings for the required tag protocol(s) and data lengths.

© ISO/IEC 2009 All rights reserved

Copyright International Organization for Standardization
Provided by IHS under license with ISO
No reproduction or networking permitted without license from IHS
Not for Resale

— Correct setting of the network infrastructure identification parameters i.e. IP Address, Device Name, SNMP Community String, etc.

— If necessary the upload of firmware to the level agreed with the customer.

— Configuration of any pre-agreed radio frequency sub-band mapping.

— Configuration, if required, of general interrogator parameters to handle the operation of external devices such as external triggers and audio/visual outputs.

— Configuration, if required, of any customised functions within the system i.e. a write-only station or a re-work station.

— Completion of a full set of documentation covering all equipment that falls within the responsibility of the installer.

NOTE The process of commissioning a system is a separate activity to an acceptance test, which will take place afterwards.

In many installations not all parts of the system will be supplied by the same sub-contractor. In this situation the components provided by each supplier will most probably be subject to separate commissioning and acceptance.

Once the different parts of the system have been accepted, the full system will usually be tested and accepted against pre-agreed performance criteria.

Any maintenance agreement and warranty will often commence once the end user has formally accepted the system, or sub-system, provided by a supplier. This is frequently set out in the terms of the supply contract.

9.7 Site Records

Comprehensive and accurate records are essential for efficient fault finding and for the proper maintenance of the installation. The records should include cable schedules giving details of all cables that form part of the installation. The records should also include any final measurements made at each interrogator during commissioning. In addition the records should contain manufacturers' documentation for each item of equipment that makes up the total system.

A minimum of two copies of the records should be produced. One copy should be passed to the customer while the second copy should be retained by the installer.

10 Tuning and Maintenance

To ensure continued satisfactory performance of the system it is vital that arrangements are made with the customer for regular maintenance. In general maintenance will fall into two categories. There will be periodic site maintenance that will be performed by the end-user on a regular basis. In addition the organization responsible for overall maintenance of the installation may undertake planned maintenance visits to site to check that the essential parameters of the system are correct. Amongst other things this may include inspection of both cabling and grounding and a check of all key system parameters. All periodic tasks to be undertaken by the end-user and by the organization responsible for overall maintenance of the installation should be detailed thoroughly in a maintenance document and agreed by the parties.

The maintenance agreement may contain a list of recommended spare parts to be held by the end-user.

The agreement on maintenance may also include arrangements for call-out in the event of a system failure.

--`,,```,,,,````-`-`,,`,,`,`,,`---

© ISO/IEC 2009 – All rights reserved
Copyright International Organization for Standardization
Provided by IHS under license with ISO
No reproduction or networking permitted without license from IHS
Not for Resale

10.1 Dust and Contaminates

Periodic cleaning of antennas may be necessary to maintain peak performance. Dust with metallic content or water condensation may affect performance.

10.2 Antenna Fixtures

During their normal working life antenna fixtures will be subject to occasional blows from heavy objects moving at speed. It is therefore essential that any exposed antennas are given adequate physical protection. Similarly it will be necessary to ensure that any frames used for mounting antennas are suitably robust. If the frames are manufactured from metal care should be taken to ensure that the choice of metal does not give rise to corrosion. Steel frames should be galvanised or covered with a suitable protective coating. Where dissimilar metals are in contact with each other wherever possible they should be selected from the yellow metal series such as copper, brass, silver, nickel, or gold. All parts of the frame should be in good electrical contact with each other and the structure should be grounded at a single point.

Aluminium structures should not be anodised as this is likely to insulate the different components and lead to problems with their conductivity and grounding.

© ISO/IEC 2009 All rights reserved

Copyright International Organization for Standardization
Provided by IHS under license with ISO
No reproduction or networking permitted without license from IHS
Not for Resale

Bibliography

[1] ISO/IEC Directives, Part 2, *Rules for the structure and drafting of International Standards*, 2004

[2] ISO/IEC 18000-6, *Information technology — Radio frequency identification for item management — Part 6: Parameters for air interface communications at 860 MHz to 960 MHz*

[3] *AIM Global Guideline for the Implementation and Operation of UHF RFID Interrogator Systems in Logistics Applications*

[4] ISO/IEC 24729-1, *Information technology — Radio frequency identification for item management — Implementation guidelines — Part 1: RFID-enabled labels and packaging supporting ISO/IEC 18000-6C*

[5] IEC 60529 ED. 2.1 B, *Degrees of protection provided by enclosures (IP Code),* 2001

[6] International Telecommunication Union Radiocommunication Study Group (ITU-R), Working Group 1B-2 (SRD), Working Document Toward Revision of Recommendation ITU-R SM.1538-2 T*echnical and operating parameters and spectrum requirements for short range radiocommunication devices,* 2006

[7] ERC 70-03, *European Radio Commission Recommendation 70-03 Relating to the Use of Short Range Devices (SRD), Recommendation adopted by the Frequency Management, Regulatory Affairs and Spectrum Engineering Working Groups*

[8] ETSI EN 302 208-1, Draft V1.2.1, *Electromagnetic compatibility and Radio spectrum Matters (ERM); Radio Frequency Identification Equipment operating in the band 865 MHz to 868 MHz with power levels up to 2 W; Part 1: Technical requirements and methods of measurement,* 2007

[9] ETSI TR 102 436 V1.1.1, *Electromagnetic compatibility and Radio spectrum Matters (ERM); Short Range Devices (SRD) intended for operation in the band 865 MHz to 868 MHz; Guidelines for the installation and commissioning of Radio Frequency Identification (RFID) equipment at UHF,* 2005

[10] IEEE 802.11, *IEEE Standard for Information technology—Telecommunications and information exchange between systems — Local and metropolitan area networks — Specific requirements — Part 11: Wireless LAN Medium Access Control (MAC) and Physical Layer (PHY) specifications*

[11] CFR Title 47, Part 15, *U.S. Code of Federal Regulations, Title 47 (Telecommunications), Part 15 (Radio Frequency Devices),* 2007

[12] MIL-STD-810F, *Department of Defense Test Method Standard, Environmental Engineering Considerations and Laboratory Tests,* 2000

[13] NEMA-250, *Enclosures for Electrical Equipment (1000 Volts Maximum*), 2003

[14] EPCglobal UHF Gen 2, Version 1.2.0, *EPC™ Radio-Frequency Identity Protocols — Class-1 Generation-2 UHF RFID Protocol for Communications at 860 MHz – 960 MHz*, 2007

[15] DOBKIN, Daniel M., *The RF in RFID: Passive UHF RFID in Practice*, Newnes Press, 2007

© ISO/IEC 2009 – All rights reserved
Copyright International Organization for Standardization
Provided by IHS under license with ISO
No reproduction or networking permitted without license from IHS
Not for Resale

--`,,```,,,,````-`-`,,`,,`,`,,`---

Copyright International Organization for Standardization
Provided by IHS under license with ISO
No reproduction or networking permitted without license from IHS

Not for Resale

ICS 35.040

Price based on 36 pages

--`,,```,,,,````-`-`,,`,,`,`,,`---

© ISO/IEC 2009 – All rights reserved
Copyright International Organization for Standardization
Provided by IHS under license with ISO
No reproduction or networking permitted without license from IHS
Not for Resale