TECHNICAL REPORT

ISO/IEC TR 24729-1

First edition
2008-04-15

Information technology — Radio frequency identification for item management — Implementation guidelines —

Part 1: RFID-enabled labels and packaging supporting ISO/IEC 18000-6C

Technologies de l'information — Identification radiofréquentielle de gestion d'article — Lignes directrices de mise en application —

Partie 1: Étiquettes adaptées à RFID et emballage contenant l'ISO/CEI 18000-6C

Reference number
ISO/IEC TR 24729-1:2008(E)

© ISO/IEC 2008

Copyright International Organization for Standardization
Provided by IHS under license with ISO
No reproduction or networking permitted without license from IHS

Not for Resale

PDF disclaimer

This PDF file may contain embedded typefaces. In accordance with Adobe's licensing policy, this file may be printed or viewed but shall not be edited unless the typefaces which are embedded are licensed to and installed on the computer performing the editing. In downloading this file, parties accept therein the responsibility of not infringing Adobe's licensing policy. The ISO Central Secretariat accepts no liability in this area.

Adobe is a trademark of Adobe Systems Incorporated.

Details of the software products used to create this PDF file can be found in the General Info relative to the file; the PDF-creation parameters were optimized for printing. Every care has been taken to ensure that the file is suitable for use by ISO member bodies. In the unlikely event that a problem relating to it is found, please inform the Central Secretariat at the address given below.



COPYRIGHT PROTECTED DOCUMENT

© ISO/IEC 2008

All rights reserved. Unless otherwise specified, no part of this publication may be reproduced or utilized in any form or by any means, electronic or mechanical, including photocopying and microfilm, without permission in writing from either ISO at the address below or ISO's member body in the country of the requester.

ISO copyright office
Case postale 56 • CH-1211 Geneva 20
Tel. + 41 22 749 01 11
Fax + 41 22 749 09 47
E-mail copyright@iso.org
Web www.iso.org

Published in Switzerland

Copyright International Organization for Standardization
Provided by IHS under license with ISO
No reproduction or networking permitted without license from IHS

© ISO/IEC 2008 – All rights reserved

Not for Resale

Contents

Page

Foreword vii
Introduction viii
1 Scope 1
2 Normative references 1
3 Terms and definitions 3
4 Passive RFID transponder selection 4
4.1 General 4
4.2 Passive UHF transponder frequency considerations 4
4.3 UHF transponder design factors 5
4.4 Transponder life and failure modes 5
4.4.1 Flexure and minimum bending radius of the passive RFID transponders media 5
4.4.2 Environmental considerations 5
5 Media incorporating passive RFID transponders 5
5.1 General 5
5.2 Media configurations 6
5.2.1 Pressure-sensitive labels 6
5.2.2 Dry-gum (water-activated) adhesive labels 6
5.2.3 Passive RFID transponders tickets used in carrier envelopes 6
5.2.4 Tie-on tags 6
5.3 Environmental considerations in media design 6
5.3.1 General 6
5.3.2 Operating and storage temperature ranges of applied passive RFID transponders labels 7
5.3.3 Storage of media incorporating passive RFID 7
5.4 Media printable facestocks 7
5.5 Printing method and ink compatibility 7
5.6 Permanent label and inlay adhesives 7
5.6.1 General 7
5.6.2 Adhesive RF properties and transponder compatibility 8
5.6.3 Hygroscopic adhesives 8
5.7 Removable label adhesives 8
5.8 Release liners (backing) for pressure-sensitive labels and inlays 8
5.8.1 Purpose 8
5.8.2 Adhesive compatibility and release level 8

© ISO/IEC 2008 – All rights reserved

--`,,```,,,,````-`-`,,`,,`,`,,`---

Copyright International Organization for Standardization
Provided by IHS under license with ISO
No reproduction or networking permitted without license from IHS
Not for Resale

5.8.3 Removing the passive RFID transponders label and inlays from the release liner 8
5.8.4 RF properties of release liners 9
5.9 Avoiding electrostatic discharge (ESD) 9
5.9.1 Overview 9
5.9.2 Peeling as a source of static electricity 9
5.9.3 Conveyors as sources of static electricity 10
5.9.4 ESD compliance testing 10
5.9.5 Printer-encoder considerations 10
6 Printing and encoding labels with passive RFID transponders 10
6.1 Printing methods 10
6.2 Label edge start sensing issues 11
6.3 Encoding and/or verifying transponder data 11
6.4 Dealing with defective transponders 11
7 Placement and attachment of media and inlay with passive RFID transponders 11
7.1 RF influence of the transport unit and its contents on the transponder 11
7.2 Visual inspection method for determining label or inlay placement 12
7.3 Transponders for objects primarily acting as RF reflectors 13
7.4 Transponders for objects primarily acting as RF absorbers 14
7.5 Some common packaging problems 14
8 RFID labelling of conveyable cases and containers 15
8.1 Overviews 15
8.2 Definition of a conveyable object 15
8.2.1 Transport units 16
8.2.2 Reusable plastic totes, delivery trays, etc. 17
8.2.3 Other conveyable goods 17
8.3 RFID reader assumptions 17
8.4 Label format and transponder data structure 17
8.4.1 Printed label format 17
8.4.2 ISO data structures 18
8.4.3 EPCglobal data structures 18
8.4.4 Use and reuse of transport unit transponders 19
8.5 Use of multiple passive RFID transponders 19
8.5.1 Use of multiple passive ISO RFID transponders 19
8.5.2 Use of multiple passive EPC RFID transponders 20
9 Passive RFID transponders and labelling of palletized unit loads 20
9.1 Overview 20
9.2 RFID reader assumptions 20
9.2.1 Portal readers 20

 © ISO/IEC 2008 – All rights reserved

Copyright International Organization for Standardization
Provided by IHS under license with ISO
No reproduction or networking permitted without license from IHS Not for Resale

9.2.2 Forklift-mounted readers 21
9.2.3 Pallet conveyor readers 21
9.2.4 Handheld readers 21
9.3 Passive RFID transponders label usage and placement on pallet unit loads 21
9.3.1 General rules for unit load passive RFID transponders label location 21
9.3.2 General rules for active RFID transponders used on returnable transport items (RTIs) 22
9.3.3 Transponder data structure 22
9.3.4 Wooden and plastic pallets 23
9.3.5 Special considerations for bin, cage, and tub pallet containers 23
9.4 Permanent RFID transponders on pallets compliant to ISO 17364 23
9.5 Permanent RFID transponders on pallets compliant to EPCglobal 24
10 Non-conveyable and non-palletized materiel 24
10.1 General 24
10.2 RFID reader assumptions 24
10.3 Guidelines for some common types of objects and transport units 24
10.4 Label printed format and transponder data structure 25
10.5 Use of multiple passive RFID transponders 25
11 Representing EPCglobal data structures in bar codes 25
11.1 Unique Item Identifier (UII) representation 25
11.1.1 Background 25
11.1.2 Recommended representations 25
11.1.3 Bar code Application Identifiers and Data Identifier needs 26
11.1.4 Flag Character 27
11.1.5 EPCglobal tag data memory organization 28
11.2 EPCglobal UHF Gen 2 bar code backup of binary UII data 29
11.2.1 EPCglobal UHF Gen 2 data memory organization 29
11.2.2 Full backup of UHF Gen 2 binary UII data structures 30
11.2.3 Supplemental Backup of UHF Gen 2 binary UII data structures 30
11.3 Optional backup of Gen 2 mixed binary/alphanumeric UII data 31
11.4 Regenerating or updating RFID-enabled labels 32
11.4.1 Regenerating failed tags 32
11.4.2 Use of the tag identification field (TID) 32
11.4.3 Modified UII data structure 33
11.4.4 Replacing bad RFID enabled labels 33
12 Human readable interpretation (HRI) backup 33
12.1 Need for HRI 33
12.2 Manual data entry considerations 33
12.3 HRI for EPCglobal UHF Gen 2 UII data 34

© ISO/IEC 2008 – All rights reserved

Copyright International Organization for Standardization
Provided by IHS under license with ISO
No reproduction or networking permitted without license from IHS
Not for Resale

13 Data for bar code and human readable backup examples 34
13.1 SGTIN-96 example 34
13.2 UHF Gen 2 tag backup 35
14 Linear bar code recommendation 36
14.1 General 36
14.2 UHF Gen 2 backup using GS1-128 bar codes 36
14.2.1 Full Backup of UHF Gen 2 UII data 36
14.2.2 Supplemental Backup of UHF Gen 2 UII data 37
14.3 Partial backup 39
14.4 Linear bar code printing recommendations 39
15 Two-dimensional bar code symbol backup 39
15.1 GS1 supported symbologies 39
15.1.1 Use of Data Matrix 39
15.1.2 Use of EAN.UCC Composite 40
15.2 Other ISO/IEC 2D symbologies 40
15.3 The Military Shipping Label 40
Annex A (informative) **Design terms for passive RFID transponders inlays or labels 41**
Annex B (informative) **AIM RFID Emblem for passive RFID transponders 43**
Annex C (informative) **Optimizing passive RFID transponders placement 45**
Annex D (informative) **UHF Gen 2 tag data memory map 53**
Annex E (informative) **ISO/IEC 18000-6c tags, ASCII, and AFIs 55**
Annex F (informative) **Recovering the UII from pre-existing bar codes 57**
Annex G (informative) **Summary and Examples 59**
Bibliography 61

© ISO/IEC 2008 – All rights reserved

Copyright International Organization for Standardization
Provided by IHS under license with ISO
No reproduction or networking permitted without license from IHS
Not for Resale

Foreword

ISO (the International Organization for Standardization) and IEC (the International Electrotechnical Commission) form the specialized system for worldwide standardization. National bodies that are members of ISO or IEC participate in the development of International Standards through technical committees established by the respective organization to deal with particular fields of technical activity. ISO and IEC technical committees collaborate in fields of mutual interest. Other international organizations, governmental and non-governmental, in liaison with ISO and IEC, also take part in the work. In the field of information technology, ISO and IEC have established a joint technical committee, ISO/IEC JTC 1.

International Standards are drafted in accordance with the rules given in the ISO/IEC Directives, Part 2.

The main task of the joint technical committee is to prepare International Standards. Draft International Standards adopted by the joint technical committee are circulated to national bodies for voting. Publication as an International Standard requires approval by at least 75 % of the national bodies casting a vote.

In exceptional circumstances, the joint technical committee may propose the publication of a Technical Report of one of the following types:

— type 1, when the required support cannot be obtained for the publication of an International Standard, despite repeated efforts;

— type 2, when the subject is still under technical development or where for any other reason there is the future but not immediate possibility of an agreement on an International Standard;

— type 3, when the joint technical committee has collected data of a different kind from that which is normally published as an International Standard ("state of the art", for example).

Technical Reports of types 1 and 2 are subject to review within three years of publication, to decide whether they can be transformed into International Standards. Technical Reports of type 3 do not necessarily have to be reviewed until the data they provide are considered to be no longer valid or useful.

Attention is drawn to the possibility that some of the elements of this document may be the subject of patent rights. ISO and IEC shall not be held responsible for identifying any or all such patent rights.

ISO/IEC TR 24729-1, which is a Technical Report of type 2, was prepared by Joint Technical Committee ISO/IEC JTC 1, *Information technology*, Subcommittee SC 31, *Automatic identification and data capture techniques*.

ISO/IEC TR 24729 consists of the following parts, under the general title *Information technology — Radio frequency identification for item management — Implementation guidelines*:

— *Part 1: RFID-enabled labels and packaging supporting ISO/IEC 18000-6C*

— *Part 2: Recycling and RFID tags*

--`,,```,,,,````-`-`,,`,,`,`,,`---
© ISO/IEC 2008 – All rights reserved
Copyright International Organization for Standardization
Provided by IHS under license with ISO
No reproduction or networking permitted without license from IHS
Not for Resale

Introduction

This Part of ISO/IEC TR 24729 provides background, reference information, and practical knowledge in the selection and application of passive RFID transponders to transport units and pallets (see Layers 2 and 3 of Figure 1) used to move and distribute commercial packaged goods. This may be accomplished with inlays or conventional labels, tickets and tags *with embedded or attached RFID transponders*. This document does not address applications where the transponder is embedded in the container itself.

The assumptions for this document are:

1. RFID transponders may be placed separately from human- and machine-readable labels or information on to the transport unit or pallet. However, if RFID is to be supplied, it is important to have all three on the transport unit or pallet.

2. RFID transponders will increase in reliability therefore non-reads will be minimized.

3. ISO/IEC TR 24729-2 will describe the disposition of non-readable transponders.

The performance of RFID devices, particularly those operating at UHF frequencies (860-960 MHz) are strongly influenced by the construction of the RFID-enabled label, where it is applied to the object, and the RF characteristics of the underlying object or objects. In this regard, much more care has to be taken in selection and placement of the RFID-enabled label on the object than with a conventional bar code label. This, in turn, requires the additional knowledge and practical guidelines for RFID-enabled label selection and usage provided herein.

© ISO/IEC 2008 – All rights reserved

Copyright International Organization for Standardization
Provided by IHS under license with ISO
No reproduction or networking permitted without license from IHS
Not for Resale

Information technology — Radio frequency identification for item management — Implementation guidelines —

Part 1: RFID-enabled labels and packaging supporting ISO/IEC 18000-6C

1 Scope

This Part of ISO/IEC TR 24729 provides guidance on the use of RFID enabled labels and packaging in the supply chain. Guidance is provided for transponder selection, as well as the selection of media, adhesives, facestocks, and inks. Techniques are described to minimize electrostatic discharge and transponder damage. Methods are described to verify transponder data. Placement and attachment guidance is provided for inlays, conveyable cases and containers, palletized/unit load material, as well as non-conveyables and non-palletized materials.

One type of RFID referred to within this document is the EPCglobal Class 1 Generation 2 technology. The "Class" structure originally embraced by EPCglobal has, for the most part, been overtaken by events. Consequently, this technology may be referred to as UHF Gen 2 or by its ISO designation, ISO/IEC 18000, Part 6C.

2 Normative references

The following referenced documents are indispensable for the application of this document. For dated references, only the edition cited applies. For undated references, the latest edition of the referenced document (including any amendments) applies.

ISO/IEC 646, *Information technology — ISO 7-bit coded character set for information interchange*

ISO/IEC 13239, *Information technology — Telecommunications and information exchange between systems — High-level data link control (HDLC) procedures*

ISO/IEC 15417, *Information technology — Automatic identification and data capture techniques — Code 128 bar code symbology specification*

ISO/IEC 15418, *Information technology — EAN/UCC Application Identifiers and Fact Data Identifiers and Maintenance*

ISO 15394, *Packaging — Bar code and two-dimensional symbols for shipping, transport and receiving labels*

ISO/IEC 15434, *Information technology — Automatic identification and data capture techniques — Syntax for high-capacity ADC media*

ISO/IEC 15438, *Information technology — Automatic identification and data capture techniques — PDF417 bar code symbology specification*

ISO/IEC 15459-5, *Information technology — Unique identifiers — Part 5: Unique identifier for returnable transport items (RTIs)*

ISO/IEC 15961, *Information technology — Radio frequency identification (RFID) for item management — Data protocol: application interface*

ISO/IEC 15962, *Information technology — Radio frequency identification (RFID) for item management — Data protocol: data encoding rules and logical memory functions*

ISO/IEC 16022, *Information technology — Automatic identification and data capture techniques — Data Matrix bar code symbology specification*

--`,,```,,,,````-`-`,,`,,`,`,,`---
© ISO/IEC 2008 – All rights reserved
Copyright International Organization for Standardization
Provided by IHS under license with ISO
No reproduction or networking permitted without license from IHS
Not for Resale

ISO/IEC 16388, *Information technology — Automatic identification and data capture techniques — Code 39 bar code symbology specification*

ISO 17363, *Supply chain applications of RFID – Freight containers*

ISO 17364, *Supply chain applications of RFID – Returnable transport items (RTIs)*

ISO 17365, *Supply chain applications of RFID – Transport units*

ISO 17366, *Supply chain applications of RFID – Product packaging*

ISO 17367, *Supply chain applications of RFID – Product tagging*

ISO/IEC 18000-6, *Information technology — Radio frequency identification for item management — Part 6: Parameters for air interface communications at 860 MHz to 960 MHz*

ISO/IEC 18000-7, *Information technology — Radio frequency identification for item management — Part 7: Parameters for active air interface communications at 433 MHz*

ISO/IEC 18004, *Information technology — Automatic identification and data capture techniques — QR Code 2005 bar code symbology specification*

ISO/IEC 18046, *Information technology — Automatic identification and data capture techniques — Radio frequency identification device performance test methods*

ISO/IEC 18047-6, *Information technology — Radio frequency identification device conformance test methods — Part 6: Test methods for air interface communications at 860 MHz to 960 MHz*

ISO/IEC 19762 (all parts), *Information technology — Automatic identification and data capture (AIDC) techniques — Harmonized vocabulary*

ISO 21067, *Packaging — Vocabulary*

ISO 22742, *Packaging — Linear bar code and two-dimensional symbols for product packaging*

ISO/IEC 24723, *Information technology — Automatic identification and data capture techniques — EAN.UCC Composite bar code symbology specification*

ISO/IEC 24724, *Information technology — Automatic identification and data capture techniques — Reduced Space Symbology (RSS) bar code symbology specification*

ISO/IEC 24728, *Information technology — Automatic identification and data capture techniques — MicroPDF417 bar code symbology specification*

IEC 61000-4-2 Ed. 1.2 b:2001, *Electromagnetic compatibility (EMC) — Part 4-2: Testing and measurement techniques — Electrostatic discharge immunity test*

ITU Recommendation X.25, *Interface between data terminal equipment (DTE) and data circuit-terminating equipment (DCE) for terminals operating in the packet mode and connected to public data networks by dedicated circuit*

FCC Part 15.247, *U.S. Code, Title 47 — Telecommunication Chapter I — Federal Communications Commission, Part 15 — Radio Frequency Devices — Section 15.247 — Operation within the Bands 902-928 MHz, 2400-2483.5 MHz, and 5725-5850 MHz*

© ISO/IEC 2008 – All rights reserved
Copyright International Organization for Standardization
Provided by IHS under license with ISO
No reproduction or networking permitted without license from IHS
Not for Resale

ETSI EN 302 208-1 V1.1.1, *European Standard (Telecommunications series), Electromagnetic compatibility and Radio spectrum Matters (ERM); Radio Frequency Identification Equipment operating in the band 865 MHz to 868 MHz with power levels up to 2 W; Part 1: Technical requirements and methods of measurement*

AIM Global NASAG-0401, v1.4, *AIM Global Standard for the use of the AIM RFID Emblem™ and Index to identify RFID-enabled labels*

GS1 General Specifications

EPC™ Radio-Frequency identity protocols, Class-1 Generation-2 UHF RFID, Protocol for communications at 860 MHz – 960 MHz, Version 1.0.9

EPC Tag Data Standards version 1.3

EPC Tag Data Standards version 1.1, Rev 1.27

MIL-STD-129P, *Military Marking for Shipment and Storage*

Department of Defense Guide to Uniquely Identifying Items, v1.5

3 Terms and definitions

For the purposes of this document, the terms and definitions given in ISO/IEC 19762 (all parts) and the following apply.

3.1
passive RFID transponder
combination of an RFID integrated circuit (chip) bonded to an antenna, where the antenna is used for both two-way wireless communication and to draw power from the reader RF signal to operate the RFID chip

3.2
inlet dry
RFID transponder (chip and antenna) attached to substrate (typically a clear film) providing a physical means to handle the transponder

3.3
inlet wet
RFID transponder (chip and antenna) attached to a substrate that is coated with a layer of adhesive for attachment to a package

3.4
inlay (inlet wet)
inlet with adhesive, on a release liner, for attaching to another surface

3.5
transport unit
1) cases, sleeves, trays, bundles (Kraft paper or poly wrapped), bags, sacks, rigid containers (tubs, totes, drums etc.)

2) either a transport package or a unit load

[ISO 15394, 4.2]

3.6
primary package
1) first wrap on containment of the product

NOTE In some cases the primary package is the transport unit or the pallet. See Figure 1.

© ISO/IEC 2008 – All rights reserved

Copyright International Organization for Standardization
Provided by IHS under license with ISO
No reproduction or networking permitted without license from IHS
Not for Resale

2) packaging designed to come into direct contact with the product

[ISO 21067, 2.2.2]

3.7
media
refers to the physical label, tag or ticket

NOTE Media with passive RFID device (transponder or inlay) *(replaces RFID enabled media in the document)*

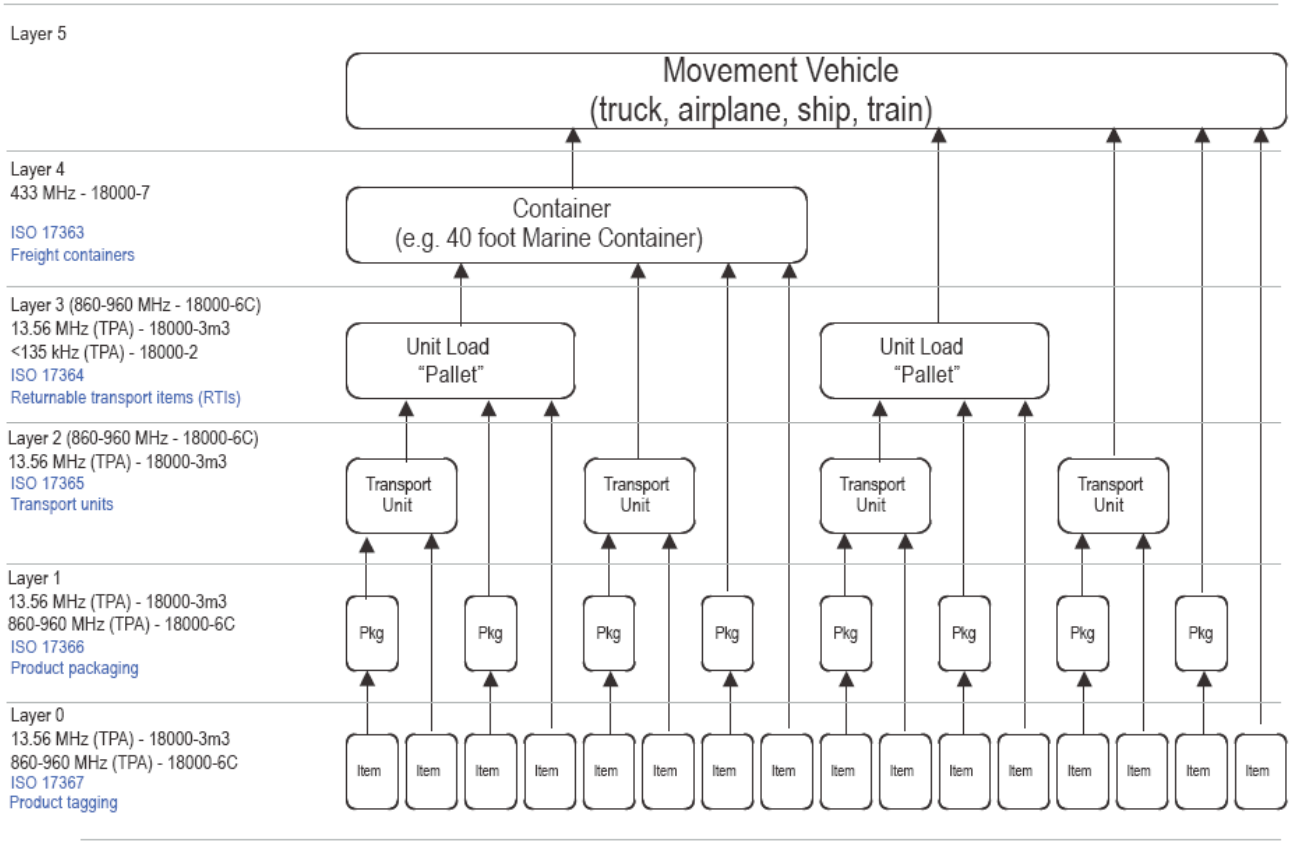

Figure 1 – Supply chain layers of RFID

4 Passive RFID transponder selection

4.1 General

Passive RFID transponder chips operating in the 860 – 960 MHz range should meet the requirements of ISO/IEC 18000, Part 6c.

4.2 Passive UHF transponder frequency considerations

RFID readers are subject to local regulations regarding frequency and allowed reader power. For example, in North America, the nominal operating frequencies are 902-928 MHz, conforming to FCC Part 15.247. In Europe, the nominal operating frequencies are 865-868 MHz, conforming to EN 302-208-1. In Japan, the nominal frequencies are in the range of 950-956 MHz, conforming to the Radio Law of Japan. Local regulations should be consulted before purchasing and deploying UHF RFID readers.

--`,,```,,,,````-`-`,,`,,`,`,,`---
Copyright International Organization for Standardization
Provided by IHS under license with ISO
No reproduction or networking permitted without license from IHS
Not for Resale
© ISO/IEC 2008 – All rights reserved

The transponder, when applied to the package, preferably shall be *functional* over the full range of UHF RFID frequencies that are approved for use in most countries, i.e. 860 MHz to 960 MHz. It is acknowledged that the reading performance of a transponder may differ in different regulatory environments.

4.3 UHF transponder design factors

UHF transponder antennas may be fabricated in a number of ways. Antennas produced by each process have different electrical and mechanical properties. It is important to determine that the chosen passive RFID transponders media performs according to the RFID transponder performance specifications when it is mounted on the transport unit or pallet of interest. The key parameter here is the range at which the label and transport unit or pallet (or pallet) combination can be properly read at the required distance and orientation. Standard test methods are described in ISO/IEC 18046. Simplified lab methods are given in Annex C.

4.4 Transponder life and failure modes

The method of transponder construction affects its technical performance, operating life, and environmental compatibility, as well as its cost. Certain special considerations apply.

4.4.1 Flexure and minimum bending radius of the passive RFID transponders media

Depending on the materials and methods used in production of the transponder antenna and the chip bonding method and orientation of the transponder on the substrate, every transponder has a minimum[1] allowed bending radius (radius of curvature). Flexing or bending the finished passive RFID transponders media to a radius smaller than this minimum radius at any point in the application process may result in RFID failure either from antenna fracture or breaking of the chip-antenna bond.

The RFID label manufacturer should be able to provide the value for the minimum-bending radius. In absence of specific information, one practical rule is to never bend the passive RFID transponders labels to a tighter radius than that of the core on which the labels were supplied.

4.4.2 Environmental considerations

Environmental conditions for storage, transportation, and in-use operations should be specified by the user to the manufacturer of the RFID transponders based on the intended usage, e.g. the required working temperature and humidity, and any other unusual environment conditions expected of the object being labelled. The RFID transponder shall survive the same environmental conditions as the material and container onto which the RFID transponder is attached, over its intended working life.

Both extreme limits and cycling of environmental conditions can reduce RFID transponder operating life. Failure modes include chip-bonding failure and antenna fracture, as well as antenna corrosion, electrostatic discharge, etc. Accelerated life testing is recommended before deployment when unusual environmental conditions are expected to determine any limitations on working life of the RFID transponder. These conditions may include outdoor storage; desert heat, artic cold or freezer storage; nuclear or electromagnetic radiation exposure, chemical wash-down, etc.

5 Media incorporating passive RFID transponders

5.1 General

This clause discusses the materials and construction techniques used in making passive RFID transponders labels and tie-on tags. There are many factors that determine the appropriate design for a given application; whether that design will be environmentally compatible with the intended use, and have stable RFID performance over the required usage life. All of these factors affect media cost.

[1] Three (3) inch diameter is the recommended minimum

© ISO/IEC 2008 – All rights reserved

Copyright International Organization for Standardization
Provided by IHS under license with ISO
No reproduction or networking permitted without license from IHS
Not for Resale

5.2 Media configurations

5.2.1 Pressure-sensitive labels

Pressure-sensitive adhesives are widely used in passive RFID transponders media. When properly chosen, these can meet both performance and environmental needs. Annex A contains basic terminology and key design parameters for passive RFID transponders pressure-sensitive labels.

The inlay is attached to the facestock by the facestock adhesive, and the back of the inlay is adhesive coated as well to improve passive RFID transponders media adhesion and prevent an air bubble from forming between the inlay and the transport unit or pallet.

RFID transponders may be inserted into envelopes as an aid to transponder recovery and/or recycling. The envelopes may be attached to the facestock and adhesive coated in a similar manner to direct attachment of a transponder, as above.

5.2.2 Dry-gum (water-activated) adhesive labels

These are *NOT* recommended for use in passive RFID transponders media, because the water required for activation of the adhesive can have an impact on transponder performance. Water molecules attenuate UHF signals, so read range may be adversely affected. Added moisture may result in changing the conductivity of the adhesive, reducing antenna performance. Finally, added moisture may result in corrosion or chemical change in the properties of the antenna material or the chip bond.

5.2.3 Passive RFID transponders tickets used in carrier envelopes

Passive RFID transponders tickets can be inserted in paper or plastic envelopes. These envelopes may be directly attached to transport cases or pallets as a way of applying identification.

The envelopes should preferably be vented to atmospheric air to avoid entrapment of moisture that may condense, whereby preventing transponders from functioning properly; however vents preferably should not compromise the protection afforded by the envelope from general environmental hazards (e.g. rain). An envelope should normally provide additional ESD protection for the transponder. Envelope adhesives should preferably conform to the guidelines in Clause 5.6; however this is less critical than in pressure-sensitive labels as the envelope adhesive is not in contact with the RFID transponder itself. The type of paper or plastic used for these envelopes should be both transparent to UHF radio waves and UV-resistant. Most types of polypropylene, polyethylene, PET and polyester films are reasonably low in attenuation at UHF frequencies. Polyvinyl Chloride (PVC) films should be avoided when utilizing transponders with copper antennas due to potential long-term corrosion of the transponder antenna by the plasticizers.

5.2.4 Tie-on tags

Tie-on tags are passive RFID transponders tickets that are attached with a tie-on. These are often used on non-conveyable materiel. Depending on the situation, a conductive wire tie-on may affect the transponder performance, positively or negatively. UV-resistant plastic (or other non-conductive) tie-ons are generally recommended for use with passive RFID transponders tags.

5.3 Environmental considerations in media design

5.3.1 General

Many Commodity Classes of labelled materiel (including medicines and perishable food items) have highly restricted temperature ranges and operating life. In this case, the passive RFID transponders label need only meet the environmental and working life requirements of the labelled material itself.

--`,,```,,,,````-`-`,,`,,`,`,,`---

Copyright International Organization for Standardization
Provided by IHS under license with ISO
No reproduction or networking permitted without license from IHS
© ISO/IEC 2008 – All rights reserved
Not for Resale

5.3.2 Operating and storage temperature ranges of applied passive RFID transponders labels

The following recommendations apply.

Reading temperature range: -40 °C to +70 °C

Storage range (non-reading) -51 °C to +95 °C

5.3.3 Storage of media incorporating passive RFID

Passive RFID transponders labels should be stored in a cool, dry environment sealed in anti-static (non-conductive) bags or cartons. This prevents water or other environmental damage; maintains paper (conductive) moisture balance; prevents adhesive deterioration; and chip damage from electrostatic discharge. Temperature and humidity should be maintained within the limits of the manufacturer's specifications.

5.4 Media printable facestocks

The facestock is the surface of the media that is to be printed. Paper and plastic facestocks may be used with passive RFID. Metal foil, metalized plastics, metal filled plastic, or high UHF attenuation plastics facestocks are not typically used in passive RFID transponders labels as they interfere with RF communication with the transponder.

There are three key issues in selection of a media facestock: printing process compatibility, environmental compatibility with the intended media usage, and physical protection of the transponder from damage. Paper facestock is the lowest cost, but is the least environmentally resistant. UV-resistant plastic and plastic foam facestocks generally provide the best survivability in outdoor and rough service environments, and tend to provide the best protection for the transponder.

5.5 Printing method and ink compatibility

The type of ink or toner used must be matched to the type of printing process used. The ink must also be matched to the selection of the label facestock material to assure good quality of the bar codes printed on the label.

Environmental compatibility and long-term survivability of the printed image are key issues, especially for long-term or outdoor storage applications. Considerations include resistance to water damage, resistance to sunlight and UV-induced fading of the image, and image abrasion or smear resistance.

Most inks have little RF absorption. The supplier of the ribbon or ink should be consulted to ensure that there is no negative impact of printing on RFID performance. A simple test to determine if there is an impact of the ink on RF reading performance is to first measure the maximum reading distance of the unprinted passive RFID label (see Annex C). The label is then put through the intended printing process and the facestock is 100% printed with the intended ink. The maximum label reading distance is then re-measured using the same setup as before. If the maximum read range change is less than 10%, then the ink will have negligible impact on a normally printed (15-25% ink coverage) media passive RFID.

5.6 Permanent label and inlay adhesives

5.6.1 General

Label and inlay adhesives have two sets of properties that must be considered:

— "Initial tack" (ease of initial adhesion) and "settling time" (Number of minutes or hours it takes to form the full-strength permanent bond).

— Ultimate bond strength, i.e. long-term bond stability; environmental stability and aging resistance.

© ISO/IEC 2008 – All rights reserved

Copyright International Organization for Standardization
Provided by IHS under license with ISO
No reproduction or networking permitted without license from IHS
Not for Resale

Most adhesives are primarily selected for the second set of properties. There are two basic adhesive families: Acrylic adhesives and rubber-based adhesives. While acrylic adhesives offer the widest range of properties and best high-temperature performance, rubber-based adhesives tend to be lower in cost, offer high initial tack and are often quite adequate for applications such as corrugated case labelling.

The physical and mechanical characteristics of adhesives must meet customer requirements.

5.6.2 Adhesive RF properties and transponder compatibility

The adhesive, since it may be a complex chemical mixture and may also be in direct contact with the transponder antenna, can have strong effects on transponder performance. It may absorb RF energy. Chemical constituents of the adhesive may have a corrosive affect on the antenna (especially etched copper antennas). Also, many adhesives tend to chemically deteriorate with age so that while the adhesive properties may be perfectly acceptable at the time of initial passive RFID transponders label application, after several months or years the effects of adhesive aging may affect the transponder performance. The supplier of the labels should be consulted to assure that the desired label working life is achieved.

5.6.3 Hygroscopic adhesives

Hygroscopic adhesives pick up moisture from the environment and incorporate it. This can result in a number of problems, including negative impact on RFID label performance and/or adhesive failure. Water molecules attenuate UHF signals, so read range may be adversely affected. Finally, added moisture may result in corrosion of the antenna material or the chip bond.

5.7 Removable label adhesives

Removable adhesives are usually not used with passive RFID transponders labels as they may come off unexpectedly during handling. If a removable or re-positionable passive RFID transponders label is desired for special purposes, work with the label supplier to obtain the proper degree of adhesion and life for satisfactory results.

5.8 Release liners (backing) for pressure-sensitive labels and inlays

5.8.1 Purpose

The purpose of a release liner is to carry the passive RFID transponders label during its manufacture and handling to the point that the label is applied to the container.

5.8.2 Adhesive compatibility and release level

Adhesives and release liner coatings are matched to control the force necessary to peel the label from the release liner. Release force must be balanced: high enough so that the stiffer passive RFID transponders labels or inlays nearest the roll core do not separate from the liner, and yet low enough so that the label will peel cleanly in the printer-encoder or label applicator. The depth of the die cut needs to be controlled to prevent compromising the silicon layer and facilitating consistent peel release from the liner when running on automated equipment.

5.8.3 Removing the passive RFID transponders label and inlays from the release liner

A common cause of hidden damage to passive RFID transponders label transponders is carelessness in manually removing the self-adhesive passive RFID transponders label from its release liner. This is because the natural tendency is to peel the label from the liner, resulting in excessive stress and flexure of the transponder antenna, which can cause fracture of the antenna circuit or its bond to the RFID chip. Figure 2 (left) shows this undesirable practice.

© ISO/IEC 2008 – All rights reserved
Copyright International Organization for Standardization
Provided by IHS under license with ISO
No reproduction or networking permitted without license from IHS
Not for Resale

Figure 2 (right) shows a better manual method. Lay the passive RFID transponders label face down on a flat surface, and peel the disposable release liner away from the passive RFID transponders label. This minimizes flexure of the transponder.

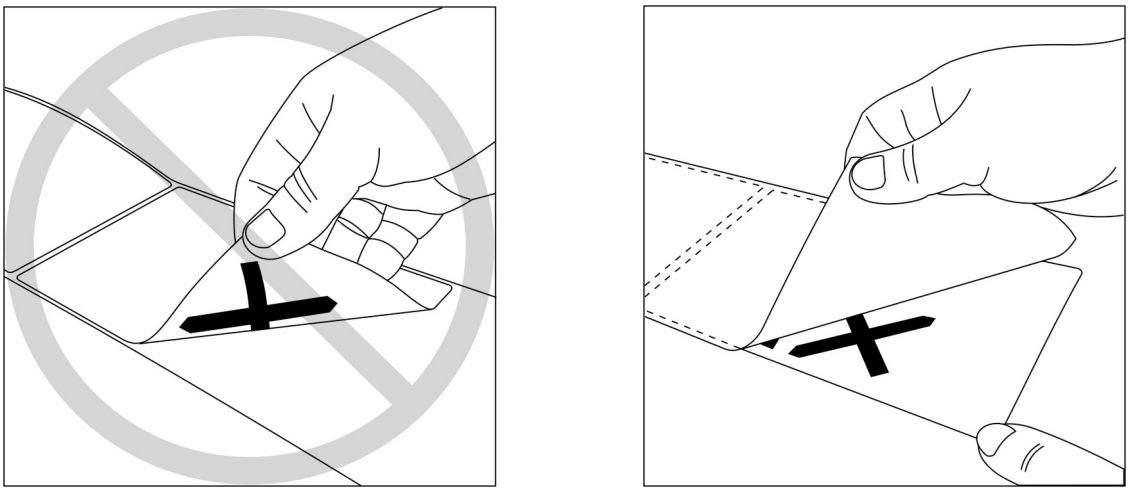

Figure 2 – Incorrect (left) and preferred (right) method of peeling passive RFID transponders labels

Printer encoders or label applicators with the capability of automatically stripping the release liner should be used at the point of label application whenever possible. These are designed to remove the release liner from the label with minimum flexure of the label.

5.8.4 RF properties of release liners

In practice, the RF properties of release liners are relatively unimportant, as the label with passive RFID is removed from the release liner before usage on the container. One place that the RF properties are slightly important during label printing and encoding inside a printer-encoder. However, in this highly controlled environment, signal loses due to RF absorption can easily be compensated. In practice, a slight increase in RF loss due to conductive additives to the silicone release liner to minimize the effects of electrostatic discharge during peeling may be a desirable trade-off.

5.9 Avoiding electrostatic discharge (ESD)

5.9.1 Overview

Many processes can easily generate static electricity, including peeling the label with passive RFID from the release liner. It is especially a problem in low-humidity environments as found in desert, winter or high-altitude conditions. Discharge of static electricity through the transponder antenna into the RFID chip can cause permanent chip failure or loss or corruption of the stored data.

An often-unrecognized source of static electricity (especially in low-humidity environments) is the operator performing the label printing and application. A static charge can build up on the operator, which may be discharged through the passive RFID transponders label as it is removed from the printer or applied to the case or asset. In dry environments and around hazardous materials, labelling operators should work in antistatic environments and wear antistatic clothing and protective gear.

5.9.2 Peeling as a source of static electricity

Peeling the passive RFID transponders label from release liner is a common source of static electricity generation. This occurs whether the label is peeled manually or within a printer or label applicator mechanism. Most printers and applicators have internal methods for safely dissipating the static electricity.

© ISO/IEC 2008 – All rights reserved

Copyright International Organization for Standardization
Provided by IHS under license with ISO
No reproduction or networking permitted without license from IHS
Not for Resale

5.9.3 Conveyors as sources of static electricity

Certain types of conveyor belts can build up static electricity as a result of their motion and rubbing against surfaces. This static charge can be transferred to the labelled object causing RFID label damage. The best way to avoid this is by designing or modifying the conveyor system to avoid static electricity build up. Consulting with the conveyer supplier should provide a way to have the static electricity tested and, if found, eliminated.

5.9.4 ESD compliance testing

Electrostatic discharge is clearly a safety issue around explosives, hazardous chemicals and chemical vapours. A statistically significant number of passive RFID transponders labels on packaging should be tested to provide a scientific basis for concluding that the requirement is met. Testing should be done in accordance with IEC 61000-4-2 Ed. 1.2 b: 2001. RFID transponder labels should survive and maintain the integrity of stored data under peak field strength of 50 V/m for 60 s at frequencies ranging from 860 MHz to 960 MHz. Such RFID transponder labels shall further survive and maintain the integrity of stored data after having been subjected to a 25 kilovolt electrostatic discharge.

5.9.5 Printer-encoder considerations

There are two common sources of static electricity generation in printer-encoders: That caused by unwinding or unstacking the facestock, and that arising from unwinding the ribbon. Especially in low humidity environments, a static charge can build up on the label from either source that can discharge into the chip and damage or destroy it. The solution is to safely dissipate the static electricity without damaging the RFID chip. The design of the printer-encoder should eliminate this source of passive RFID transponders label damage.

5.9.5.1 ESD in thermal transfer printers

Thermal transfer ribbons used in many label printers generate static electricity as the polyester film unwinds from the ribbon supply roll. This appears as opposite charges on both sides of the ribbon. Especially in low humidity environments, ensure that the printer has either metal contact or antistatic brushes on the inked side of the ribbon so that the static charge is not dissipated by ESD into the transponder antenna during printing.

5.9.5.2 ESD in Laser and LED printers

The electro-photography methods used in these printers rely on an electrostatic charge on a drum or belt to attract and hold the toner while it is fused to the label stock under heat and/or pressure. These electrostatic processes can contribute to passive RFID transponders label failure through ESD. Typically, there may also be mechanical failures in desktop laser printers from bending the label over small internal rollers. This type of printer should be tested extensively for passive RFID transponders label damage before deployment, especially in low humidity environments.

6 Printing and encoding labels with passive RFID transponders

6.1 Printing methods

Passive RFID transponders labels often contain unique printed information, which is correlated with the unique encoded data in the transponder. The method shall ensure that the printed human-readable, bar codes and the encoded transponder data exactly correlate, both with each other and the database record for the labelled item. Ensure that the design of the label with passive RFID transponder, selection and transponder placement in the label (see Annex A) match the printer-encoder used.

Printer-encoders designed to encode at a minimum the 96-bit EPC data structures GRAI-96, SSCC-96 and SGTIN-96, and the DoD UID-96, specified in the *EPCglobal Tag Data Standard* labels with passive RFID transponders may carry the AIM RFID Emblem “E*” as specified in Annex B. Printer-encoders designed to encode transponders compliant with ISO 17363, 17364, 17365, 17366, or 17367 may carry the AIM RFID Emblem “A* (for 433 MHz)” or “B* (for 860-960 MHz)” as specified in Annex B.

Copyright International Organization for Standardization
Provided by IHS under license with ISO
No reproduction or networking permitted without license from IHS
© ISO/IEC 2008 – All rights reserved
Not for Resale

6.2 Label edge start sensing issues

Printer-encoders generally sense either the leading edge of the label facestock; a printed black mark on the back of the label release liner; or a notch or hole. Ensure that the passive RFID transponders label stock and printer-encoder methods are correct for each other. Also see that the label registration sensor has been calibrated against the label stock in use.

6.3 Encoding and/or verifying transponder data

Most printer-encoder systems test the transponder both before and after encoding to validate that the transponder is both functional and that the data was properly encoded. Use of any method or equipment to encode passive RFID transponders labels that does not perform this validation should be avoided.

6.4 Dealing with defective transponders

Printer-encoder systems that test the transponder to validate that the transponder is both functional and the data properly encoded also generally identify labels with defective transponders by printing special marks (such as “void”) on the defective labels. These labels should be disposed of, either manually or automatically, and not used for labelling.

Most of these same printer-encoders will then attempt to encode and print the same information on next passive RFID transponders label automatically, until successful.

When serialized labels are to be prepared, it is recommended to print the label serial number with the same label format program that controls the RFID encoding process. This generally ensures that serial number sequencing is not lost when bad RFID-labels are encountered, and are then reprinted and reprogrammed on the next label.

7 Placement and attachment of media and inlay with passive RFID transponders

7.1 RF influence of the transport unit and its contents on the transponder

At UHF frequencies, packaged objects and packaging materials respond in different ways to the presence of radio waves at different frequencies. Since many non-metallic packaging materials are permeable to UHF frequencies, the RF properties of the contents affect the transponder performance, even when the transponder is placed on the outside of the transport unit. A simple view is that materials and objects may be RF transparent, RF signal reflecting or RF signal absorbing.

— Typically, the effect of conductive RF reflecting materials is to shield or detune the transponder antenna from its resonance frequency so that the antenna can no longer absorb enough RF energy to activate the transponder chip, allowing it to turn on and backscatter data back to the reader.

— Absorbing materials reduce the signal to the transponder by dissipating the RF energy from the reader, causing less energy to be available to power up the chip.

— Chemical composition of an object can result in mixed properties of reflection and absorption

Many objects are a mixture of these properties. Figure 3 shows a triangular graph of the properties, each ranging from 0 to 100%.

--`,,```,,,,````-`-`,,`,,`,`,,`---

© ISO/IEC 2008 – All rights reserved

Copyright International Organization for Standardization
Provided by IHS under license with ISO
No reproduction or networking permitted without license from IHS
Not for Resale

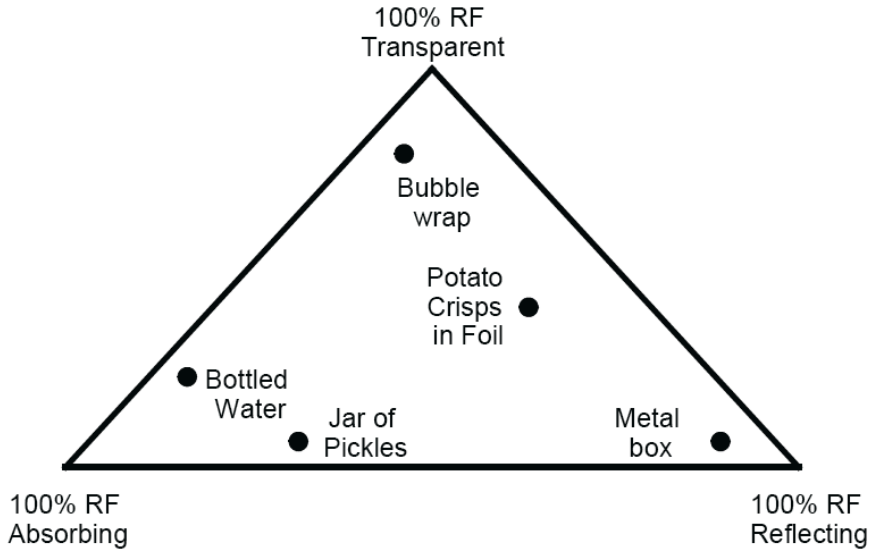

Figure 3 – RF properties of some corrugated cases containing various objects

Imagine a UHF RFID reader with its antenna placed just above the surface of the case where the transponder would be placed at a series of corrugated cases each containing one type of object. Some basic observations:

— Note that the peak of the triangle implies that the transport unit is virtually RF transparent; RF energy is neither absorbed nor reflected. Bubble wrap is only a slight RF absorber.

— Metal objects, like the metal box, are high in RF reflectance but low in absorption.

— Water is a high RF absorber at UHF, but a low RF reflector.

— The pickles in glass jars are excellent RF absorbers, because they contain electrolytes (salt and vinegar) and well as water, but the metal lids are also RF reflectors.

— The foil bags of potato crisps reflect the RF, but because of the non-uniform surface also scatter it in directions other then the incident direction. Thus some of the transport unit's reflected energy is lost, scattering it in random directions.

The fundamental point of the pyramid graph is that the higher the transport unit scores on the pyramid, the less the transport unit influences the reading of the transponder. Qualitatively, those transport units should generally have the longest read range.

One positive way to establish that a passive RFID transponders label works properly on a given type of container is to have a third party test laboratory test and certify it. Alternatively, in-house testing using the simplified methods and apparatus of Annex C will allow a selection of the type and placement of passive RFID transponders label to achieve reasonable transponder read range performance. However, many transport units can be evaluated using a common-sense visual analysis.

7.2 Visual inspection method for determining label or inlay placement

Most transport units (especially if they contain irregularly shaped metal objects) have a mixture of RF reflective and absorbing properties, which are not uniform across the surface of the transport unit. Often, the RF properties are better near the edges. In the example in Figure 4, assume a round metal bucket is packed in a corrugated case, with the top and bottom of the metal bucket nested top and bottom in moulded rigid foam; and the middle of the transport unit is open (air). Figure shows a cross-section of the transport unit bucket.

If passive RFID transponders labels are placed at points A-F on the surface of the case, their relative RF properties due to the influence of the object and its packaging (measured as described above) are shown in

© ISO/IEC 2008 – All rights reserved
Copyright International Organization for Standardization
Provided by IHS under license with ISO
No reproduction or networking permitted without license from IHS
Not for Resale

Figure 4. This figure shows a qualitative rating of their estimated RF properties from looking at the transport unit.

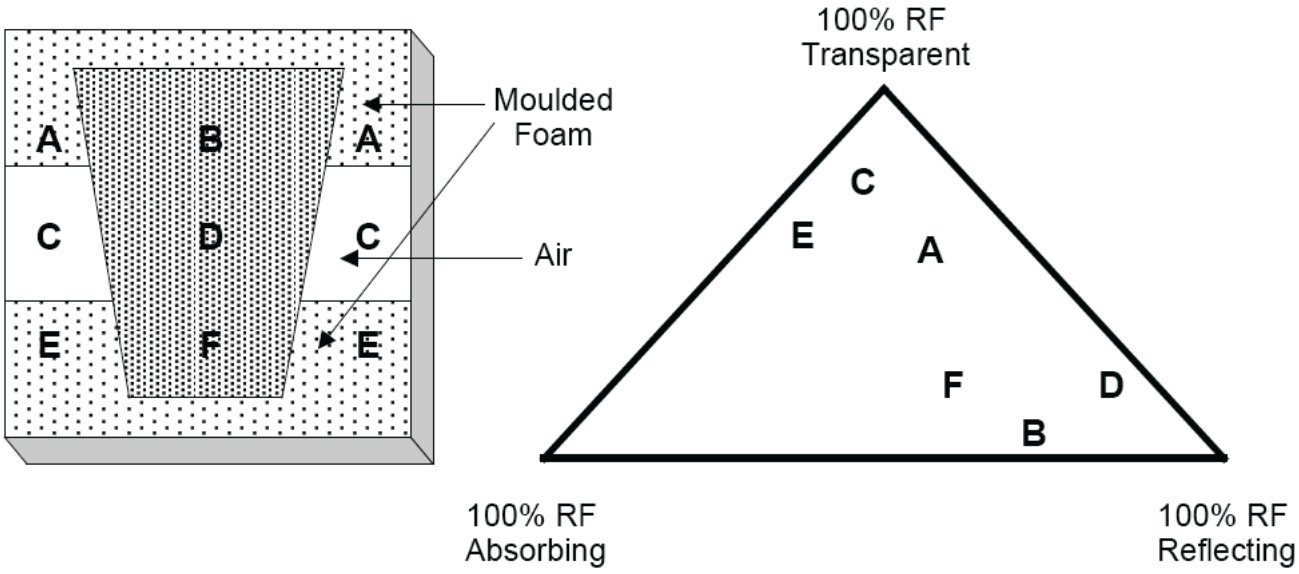

Figure 4 – RF properties map for a corrugated case containing a metal bucket

A UHF reader interrogating passive RFID transponders labels at points A-F sees different RF properties at different places. In this illustration, the moulded foam is RF absorbing while the bucket itself is RF reflecting.

- Point C would experience a small reflective effect from the nearby curved bucket, and little absorption as there is no foam in the area, just air.
- Points A and E would have equal amounts of signal absorption from the full thickness of moulded foam, with point A having a larger reflective component as the bucket diameter is larger at the top than the bottom, and thus closer to points A.
- Point B has the bucket closest to the surface, and thinner foam than point F, so point B is more reflective and has less RF absorption than point F.
- Point D has the bucket further from the surface than point B and has no foam covering it (only air), so it will have both less RF reflection and less RF absorption than point B
- The best place for a passive RFID transponder most likely is point C, as it has the least influence from the bucket in the transport unit.

This gives rise to the rule: ”Climb the pyramid” to determine the best label placement

7.3 Transponders for objects primarily acting as RF reflectors

Typically, the effect of reflective objects or metal surfaces is to detune and/or shield the transponder antenna so that the operational range is reduced.

One approach to minimize this impact is to conduct tests to find the place on the transport unit surface where the least amount of reflection occurs, and then determine whether acceptable read range performance can be obtained with a standard transponder located in that position. It is also not unusual, however, for some reflective material in the case to actually improve the performance of a standard transponder by increasing the backscatter signal in certain directions (See Annex C for test methods).

Another approach is to use a transponder specially designed for use on reflective surfaces. These typically use the corrugate itself as a spacer or have an additional foam spacer below the transponder together with a designed resonance frequency so that the effect of the reflective surface is to *retune the transponder's*

© ISO/IEC 2008 – All rights reserved

Copyright International Organization for Standardization
Provided by IHS under license with ISO
No reproduction or networking permitted without license from IHS
Not for Resale

resonant frequency toward the reader frequency. In combination with proper placement, specially designed and constructed transponders can often overcome the problems of reflective objects.

Transport units are sometimes constructed of metal. One way of improving the reading performance of the specially tuned transponders designed for reflective surfaces is to use a corrugate, plastic, foam or plywood underlabel. Even a few millimeters of separation between the metal object surface and the transponder (such as the thickness of the wall of the corrugated case itself) may result in dramatically improved read range, depending on the combination of spacer thickness and transponder selection.

7.4 Transponders for objects primarily acting as RF absorbers

Highly absorbing materials like liquids tend to absorb the RF energy from the reader before it reaches the passive RFID transponders label, and they can also detune the antenna. Both of these effects render containers of liquids or other RF absorbing materials difficult for RFID labelling.

One approach is to conduct tests to find the place on the transport unit surface where the least amount of absorption and detuning occurs, and then determine whether acceptable read range performance can be obtained with a standard transponder located in that position. See Annex C for test methods. Special transponders are also available for use on RF-absorbing objects. In combination with proper placement, special transponders can help to overcome the problems of most RF-absorbing objects.

One approach to extend the read range for highly RF-absorbing transport units is to apply a metal foil or metalized plastic label to the inside of the corrugated case behind the transponder. Alternatively, a foil or metalized spacer sheet may be inserted between the corrugate wall and the object. This isolates the transponder environment from the RF absorber. Then, passive RFID transponders labels designed for reflective surfaces then may be more effective choice.

7.5 Some common packaging problems

For product cases containing paper and/or plastic products, most RFID labels can be placed in a variety of locations on the case. Usually, the label ends up being placed in an area where it does not cover up any logo or processing lot control information stamped on the case.

For transport units containing primary packages filled with liquid product, it's best to place the RFID label as far away from the liquid as possible. Therefore, depending on how the liquid containers are designed and stacked within the transport unit, a specific area of the transport unit may have to be utilized.

— In cases containing cylindrical cans, consider locating passive RFID transponders with vertically polarized dipole antennas placed either over the gap between the curved containers or near a vertical corner of the case. The best result is usually obtained by placing the transponder as close to the edge of the case as possible.

— Necked bottles often create a substantial air space at the top of the case. Passive RFID transponders with horizontally polarized dipole antennas placed near the top of the case may be good choice.

If the pallet is shrink-wrapped or stretch-wrapped the passive RFID transponder label should be preferably affixed on the outside surface of the wrapping and not covered by it.

See Annex C for test methods.

The following is a list of packaging line issues that may have to be addressed:

— Line validation for pharmaceutical packaging (sequence, standard operation procedures)

— Bundles using poly film may require a touch - blow application method

— Paper bundle

© ISO/IEC 2008 – All rights reserved
Copyright International Organization for Standardization
Provided by IHS under license with ISO
No reproduction or networking permitted without license from IHS
Not for Resale

— Bags made from Kraft paper or plastic may require the placement of the passive RFID transponder on the small side of the bag

— Sacks made of burlap are a difficult surface to attach anything to

— Conveyor systems and product guides may damage the transponders

— Placing the inlay on the case after the case is loaded may avoid transponder damage during case handling within the case erector-loader-closer

— If the transponder is placed on the transport unit by the container manufacture transponder damage may occur within the packaging machine

— Issues with overlapping readers see ISO/IEC 24729-3

— Existing lines

— Operator training is essential regarding the implementation of RFID

— Pallet pack pattern

Product cases containing tightly packed metal products, such as a case of canned drinks, pose a real challenge. Many of these cases are not full corrugated cases at all: Instead, the corrugate is in effect a tray (approximately 5 cm in depth) that the soda sits in and then a clear plastic stretch material covers the contents. For this situation, long narrow-width RFID transponders may be physically required so that they fit on the corrugated tray. The transponder application area is limited, and the transponder antenna may cross over many cans. Labels designed for use with reflective transport unit contents work best here.

8 RFID labelling of conveyable cases and containers

8.1 Overviews

This Clause deals with passive RFID transponder placement on the conveyable corrugated cases, trays, bundles (poly or paper), bags (plastic and paper), and other objects. The goal is to find that location that will provide the most reliable transaction communications between the passive RFID transponder and the reader.

8.2 Definition of a conveyable object

Conveyable objects are designed for transport on rubber belt or roller conveyors. Most transport units are conveyable objects. Conveyable objects typically conform to the following commercial specification:

— The user should specify minimum and maximum dimensions for conveyable objects. The following specifications are listed for guidance.

  - Minimum specifications:

    - 22,5 cm long; 10,0 cm wide; 7,5 cm tall; weight ≥ 1,8 kg

  - Maximum specifications:

    - 122 cm long; 63,5 cm wide; 101 cm tall; weight ≤ 2,6 kg

— Transport units cannot be irregularly shaped

— Transport units shall be tightly sealed; flaps must remain secure during material handling

— Risk assessment should be done when transport unit contains hazardous materials and liquids.

© ISO/IEC 2008 – All rights reserved

Copyright International Organization for Standardization
Provided by IHS under license with ISO
No reproduction or networking permitted without license from IHS
Not for Resale

— Outer packaging material may be corrugate, paper or paperboard, wood, metal, rigid or heavy-gauge flexible plastic

8.2.1 Transport units

A transport unit is considered to be a container intended for the transportation and handling of one or more items, items in a smaller transport unit, or bulk material. Generally the RFID transponder should be on the longest side of the transport unit.

8.2.1.1 Recommended passive RFID transponder placement

The following recommendations address *transponder* placement, even if separate from any human or machine readable code. For transport units from 200 mm to 1 m in height, it is recommended that the transponder itself or part of a label should be placed as shown as in Figure 5:

— The bottom edge should be no closer than 25 mm from the natural bottom of the transport unit

— The top edge should be no farther than 430 mm from the natural bottom of the transport unit, but no closer than 25 mm from the natural top of the transport unit.

— Neither vertical edge of the label shall be closer than 19 mm from a vertical corner.

— Antenna polarization preferably shall be oriented to provide maximum read range under the guidance of clause 8.3 and/or Annex C, assuming a circularly-polarized reader

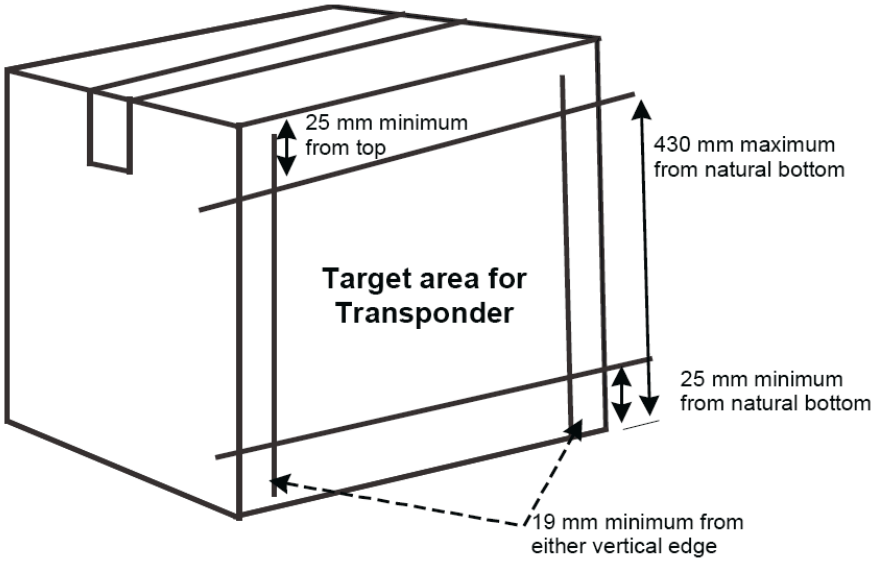

Figure 5 – Recommended transponder location on transport units

RFID media on these transport units should be placed in a location within the target area that provides the most reliable RFID communication between the media and the reader, using the guidance of clause 7 and/or Annex C. Placement of transponders at case corners or edges is not recommended, as these areas frequently suffer damage during material handing.

For transport units greater than 1 m in height, follow the recommendations of Clause 9.3.1.

Copyright International Organization for Standardization
Provided by IHS under license with ISO
No reproduction or networking permitted without license from IHS
© ISO/IEC 2008 – All rights reserved
Not for Resale

8.2.1.2 Read range performance requirement

The transponder selection and placement shall provide a read range of at least 1 meter with conveyor speeds up to 200 meters per minute at the maximum allowed radiated reader power in the radio regulatory environment in which it was designed to be used.

8.2.2 Reusable plastic totes, delivery trays, etc.

Owners of reusable shipping containers intended for use on conveyors may wish to permanently install RFID transponders on these containers to facilitate their tracking and return to the owners. The EPC Tag Data Standards specify a 96-bit data structure called the Global Returnable Asset Identifier (GRAI-96) that should be used for this purpose and permanently encoded in these permanent transponders. If a transponder utilizing GRAI-96 is used, it is in addition to the required shipping label and its required transponder structure as specified in Clause 8.4.2. If a returnable transport item transponder does not use an EPC GRAI but is otherwise ISO 17364-compliant, both the Unique Identification of the returnable transport item (UII – RTI) and the Unique Identification of the transport unit (UII – Transport unit) may be encoded in the same transponder using the syntax of ISO/IEC 15434.

In general, permanent asset identifier transponders containing UII – RTI data should be mounted on the container following the same guidelines in Clause 8.2.1 as for the transport unit label, within the placement limitations specified in Clause 8.4.4.

When multiple returnable transport item tags are used on different sides of a returnable container to identify it, each transponder will contain identical data.

8.2.3 Other conveyable goods

Bags, bundles, fibre and plastic drums, etc. may be conveyed if they meet the guidelines in Clause 8.2; are rugged enough to withstand abrasion or damage by the conveyor; and do not have loose objects straps or protrusions that can get caught in the conveyor. Passive RFID transponders labels or tie-on tags should be placed so that when the bag or bundle is on conveyor, the label is on one side of the unit, or facing upward, with the printed surface visible.

8.3 RFID reader assumptions

Typical on-conveyor reader systems use multiple antennas. As few as two wide-field antennas on opposite sides of the conveyor when cases are oriented with the passive RFID transponders label always on the side and the natural case bottom rides on the conveyor. To read all sides of a randomly oriented case as it passes down a conveyor as many as six antennas may be used. With more than two antennas speeds of 200 meters per minute may not be achieved. Since reader RF power is determined by local radio regulations, the number, placement and field width of the antennas is also affected by the available reader power.

It is strongly recommended that the reader antennas be circularly polarized, and therefore equally capable of reading tags with polarized antennas (such as UHF dipoles) placed in any orientation.

Readers designed to read at a minimum the 96-bit EPC data structures GRAI-96, SSCC-96 and SGTIN-96, and the DoD UID-96 in labels with passive RFID transponders may carry the AIM RFID Emblem “E*” as specified in Annex B. Printer-encoders designed to encode transponders compliant with ISO 17363, 17364, 17365, 17366, or 17367 may carry the AIM RFID Emblem “A*” (for 433 MHz) or “B*” (for 860-960 MHz) as specified in Annex B.

8.4 Label format and transponder data structure

8.4.1 Printed label format

8.4.1.1 EPC printed label format

The printed label format should correspond to user specifications and should contain the following:

© ISO/IEC 2008 – All rights reserved

Copyright International Organization for Standardization
Provided by IHS under license with ISO
No reproduction or networking permitted without license from IHS
Not for Resale

— Either an EPCglobal logo or the AIM RFID Emblem as shown in Annex B containing the two-character code appropriate for the RF tag's data structure in use should be printed.

— Human readable representation of the 96-bit EPC transponder data structure, printed as a 24-character ASCII hexadecimal string representation of the 96-bit data structure encoded in the bar code preceded by that of its 16-bit (24-character ASCII hexadecimal string) ISO/IEC 13239 CRC-16 check value, also referred to as the ITU Recommendation X.25 CRC-16.

NOTE: The ISO/IEC 13239/ITU X.25 CRC-16 uses the polynomial $x^{16} + x^{12} + x^5 + 1$, where one first preloads the entire CRC register with the value 0xFFFF.

8.4.1.2 ISO printed label format

The printed label format should correspond to user specifications and should contain the following:

— The AIM RFID Emblem, as shown in Annex B containing the two-character code appropriate for the RF tag's data structure in use should be printed.

— Human readable representation of transponder data structure, printed as an ASCII hexadecimal string representation of data structures followed by its 16-bit ISO 13239 CRC-16 check value if binary serialization is employed or as an ASCII alphanumeric data structure followed by its 16-bit ISO 13239 CRC-16 check value.

8.4.2 ISO data structures

These are defined in ISO 15394 and ISO 22742.

When the conveyable unit contains either:

— A predefined number of a identical commercial objects (e.g. 24 cans of peas), or

— A standard assortment or kit (e.g. a set of dishes or tools; a partially-assembled bicycle),

It generally is called a stock-keeping unit (SKU) and has associated with it a product code with quantity (implicit or explicit). If a single product code accurately represents the entire contents of the transport unit, then ISO 17366 specifies that the UII – Product package shall be utilized.

If the conveyable unit contains either:

— A non-standard assortment of objects or objects with multiple product codes (e.g. 2 cam shafts, a box of seals, and eight valve lifters)

— A non-standard number of identical commercial objects (e.g. a partial case of 17 cans of oil)

then the UII – transport unit data structure is to be utilized.

8.4.3 EPCglobal data structures

These are defined in the EPCglobal Tag Data Standard.

When the conveyable unit contains either:

— A predefined number of a identical commercial objects (e.g. 24 cans of peas), or

— A standard assortment or kit (e.g.: a set of dishes or tools; a partially-assembled bicycle),

It generally is called a stock-keeping unit (SKU) and has associated with it a Global Trade Item Number (GTIN). If a single GTIN accurately represents the entire contents of the transport unit, then the EPC Tag Data

© ISO/IEC 2008 – All rights reserved
Copyright International Organization for Standardization
Provided by IHS under license with ISO
No reproduction or networking permitted without license from IHS
Not for Resale

Standards specify that the Serialized GTIN data structure SGTIN-96 be utilized. SGTIN-96 passive RFID transponders labels should be locked so that they will not be reprogrammed.

If the conveyable unit contains either:

— A non-standard assortment of objects or objects with multiple GTINs (e.g. 2 cans of motor oil, a box of cereal, and a calculator)

— A non-standard number of identical commercial objects (e.g. a partial case of 17 cans of peas)

then the Serialized Shipping Container Code data structure SSCC-96 is to be utilized.

8.4.4 Use and reuse of transport unit transponders

8.4.4.1 Use and reuse of the UII – Transport Unit transponder

A UII – Transport Unit is intended as temporary identification corresponding to a single trip within the transport function between consignee and consignor. Different UII – Transport Unit data structures are therefore assigned to each trip. It is the intent that the UII – Transport Unit passive RFID transponders label will be unlocked and re-programmable to reflect the tracking information required in subsequent uses.

Passive RFID transponders labels shall never be placed one on top of another:

— When over-labelling a reprogrammed UII – Transport Unit label is performed, a non-passive RFID transponders (plain) label containing the human readable, bar code and the “B2” (ID only) or “B3” (ID plus additional supply chain data) AIM RFID Emblem information (see Annex B) shall be used to over label the reprogrammed UII – Transport Unit passive RFID transponders label.

— If the existing UII – Transport Unit RFID label is unable to be reprogrammed, the old passive RFID transponders label shall be removed and replaced with a new UII – Transport Unit passive RFID transponders label.

8.4.4.2 Use and reuse of the SSCC-96 transponder

An SSCC-96 is intended as temporary identification corresponding to a single trip within the transport function between consignee and consignor with a 1-year maximum assignment life. Different SSCC-96 data structures are therefore assigned to each trip. It is the intent that the SSCC-96 passive RFID transponders label will be unlocked and re-programmable to reflect the tracking information required in subsequent uses.

Passive RFID transponders labels shall never be placed one on top of another:

— When over-labelling a reprogrammed SSCC-96 label, a non-RFID (plain) label containing the human readable, bar code and the “E2” AIM RFID Emblem information (see Annex B) shall be used to over label the reprogrammed SSCC-96 passive RFID transponders label.

— If the existing SSCC-96 RFID label is unable to be reprogrammed, the old passive RFID transponders label shall be removed and replaced with a new SSCC-96 passive RFID transponders label.

8.5 Use of multiple passive RFID transponders

8.5.1 Use of multiple passive ISO RFID transponders

While a UII – Transport Unit is intended as temporary identification corresponding to a single trip, a UII – Product Package is intended to permanently identify the product contained within case.

There may be benefit to encode both UII – Product Package and UII – Transport Unit transponders in the situation that a case labelled with an UII – Product Package may be reshipped from the consignee to a new

--`,,```,,,,````-`-`,,`,,`,`,,`---

© ISO/IEC 2008 – All rights reserved
Copyright International Organization for Standardization
Provided by IHS under license with ISO
No reproduction or networking permitted without license from IHS Not for Resale

consignee or when the consignee returns a case to the consignor. When using both data structures, a single tag with separate data structures, one encoding an UII – Product Package and another encoding the UII – Transport Unit, should be used complying with the syntax of ISO/IEC 15434.

8.5.2 Use of multiple passive EPC RFID transponders

While an SSCC-96 is intended as temporary identification corresponding to a single trip, an SGTIN-96 is intended to permanently identify the product contained within case.

There may be benefit to encode both SGTIN-96 and SSCC-96 transponders in the situation that a case labelled with an SGTIN-96 may be reshipped from the consignee to a new consignee or when the case is returned by the consignee to the consignor. When using both data structures, two separate tags, one encoding an SGTIN-96 and another encoding an SSCC-96, should be affixed.

When multiple EPCglobal 96-bit passive RFID transponders labels are attached to the same case (e.g., an SSCC-96 and an SGTIN-96; or an SSCC-96 and a GRAI-96), the separation between the transponders shall be no closer than 10 cm. If the transport container is so small that one side will not support such separation, then another side of the container shall be used for the second label. The printed label formats should follow the recommendations of Clause 8.4.1.

9 Passive RFID transponders and labelling of palletized unit loads

9.1 Overview

Both passive RFID transponders media and permanently attached RFID transponders may be used—separately or together—with pallets and palletized unit loads. For example, the pallet itself may have one or more permanently attached RFID transponder(s) to aid in the tracking of the pallet itself, while the unit load on the pallet may have a passive RFID transponders shipping label.

A unit load is considered to be one or more transport units or other items held together by means such as pallet slip sheet, strapping, interlocking, glue, stretch wrap, shrink wrap, or net wrap, making them suitable for transport, stacking, and/or storage as a unit.

ISO 17364 is clear that passive transponders compliant to ISO/IEC 18000, Part 6c (860 – 960 MHz range) are preferred. However, ISO 17364 also notes that with Trading Partner Agreement active transponders compliant with ISO/IEC 18000, Part 7 (433,92 MHz) may be used as an alternative for returnable transport items, including pallets and unitized loads.

9.2 RFID reader assumptions

The pallet and/or unit load transponders will typically be read at different points in pallet handling with a variety of RFID readers operating in the 860 – 960 MHz range (18000, Part 6c) and at 433,92 MHz (18000, Part 7). Therefore, transponder selection and placement must be made to accommodate all the reader types discussed below.

9.2.1 Portal readers

Portal RFID readers are typically fixed gate or bridge readers used at dock doors to automatically read the labels of pallets and unit loads passing in either direction through that door. They also may be temporary gate readers brought to a location to facilitate unloading of a rail car, truck or container. Their function is to read unit load transponders, regardless of the orientation of the transponder relative to the reader, as long as the transponder is not up against a metal surface such as a forklift truck structure.

Copyright International Organization for Standardization
Provided by IHS under license with ISO
No reproduction or networking permitted without license from IHS
© ISO/IEC 2008 – All rights reserved
Not for Resale

9.2.2 Forklift-mounted readers

Forklift readers may have multiple antenna structures to allow reading of pallet and/or unit load labels while carried by the forklift truck. There may be a requirement for alignment of the unit load label and the forklift reader antenna, to assure reliable operation of the RFID data system. Forklift readers are typically wirelessly connected to a host computer.

9.2.3 Pallet conveyor readers

Pallet conveyor readers are typically fixed-mount devices similar to the transport unit conveyor readers discussed in Clause 9.3. They typically are short-range devices with a read range under 1 meter and a limited angle of view. To accommodate the limited field of view, the unit load passive RFID transponders label or fixed transponder is placed within a fixed band relative to the bottom of the pallet. See Clause 9.3 below for details.

9.2.4 Handheld readers

Handheld readers are often used for material handling operations at the pallet level, typically for reading the unit load label and either recording the data in a personal data terminal, and/or wirelessly communicating the data to the reader's host computer. Handheld readers are widely used in reading materiel once deployed in the field.

Handheld readers are usually low power, battery-operated devices with a read range more limited than typical portal readers. They may be integrated with bar code readers and/or a personal data terminal. A key requirement is that the user brings the reader close enough to the transponder for it to read reliably.

9.3 Passive RFID transponders label usage and placement on pallet unit loads

Each pallet shall have at least one unit load passive RFID transponders label or, with trading partner agreement, one unit load active transponder. Unit load tracking should utilize a passive RFID transponder encoded with an appropriate 96-bit data structure corresponding to Clause 9.3.2. The printed label format should correspond to Clause 8.4.1.

9.3.1 General rules for unit load passive RFID transponders label location

These general rules for transponder placement parallel the rules for bar code labels in ISO 15394. While it is recognized that the transponder (RF tag) will generally be integral with the shipping label, the following recommendations address transponder placement: Referring to Figure 6:

— If the pallet is shrink-wrapped or stretch-wrapped, the passive RFID transponders label shall be affixed on the outside surface of the wrapping, and not covered by it.

— Passive RFID transponders labels should be placed on the long side of the transport unit with the human readable information parallel to the natural bottom of the transport unit.

— The passive RFID transponders label shall be placed right of centre on a vertical face, allowing a minimum of 5 cm from all edges to prevent transponder damage during material handling.

— The bottom edge of the tag containing the unit load information should be within the range of 81 cm to 122 cm from the bottom of the pallet. If the pallet is less than 51 cm in height, the label should be placed as high as possible on the pallet, but not closer than 5 cm to the natural top of the unit load

— The label should not be placed over a seam nor should sealing tape or bands be placed over the label in a manner that interferes with the scanning of the label bar codes or reading the transponder data.

— The passive RFID transponders should not be placed in a manner that overlaps any other existing RF transponder. There should be at least a 10 cm separation between transponders.

--`,,```,,,,````-`-`,,`,,`,`,,`---
© ISO/IEC 2008 – All rights reserved
Copyright International Organization for Standardization
Provided by IHS under license with ISO
No reproduction or networking permitted without license from IHS
Not for Resale

— Passive RFID transponders should be affixed at a suitable location where there is a minimum risk of damage.

— Passive RFID transponder material shall be environmentally compatible with the conditions of shipment and storage of the unit load.

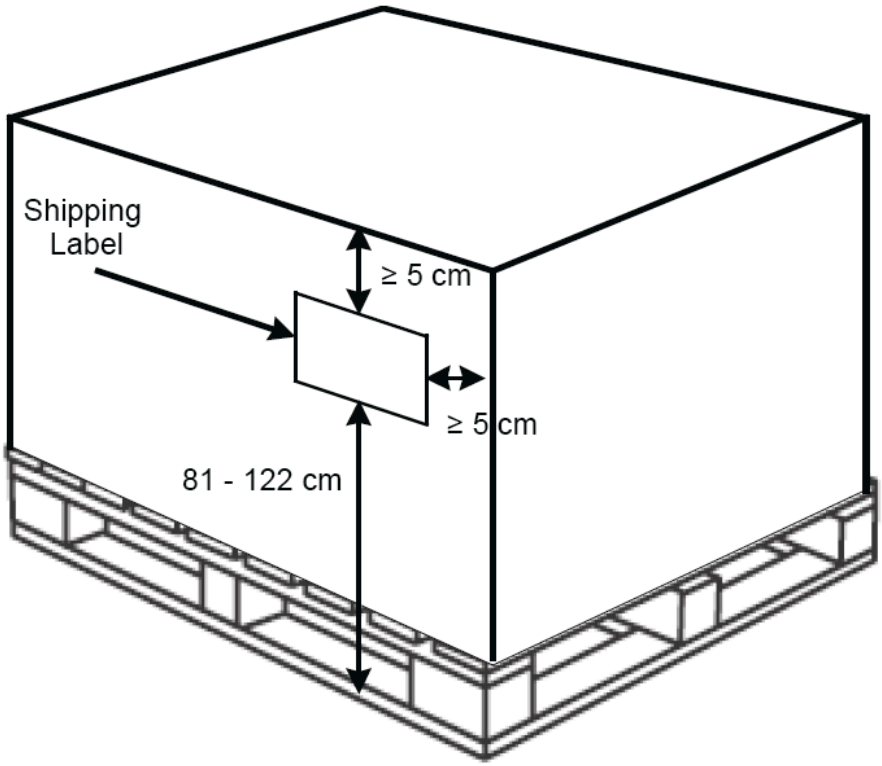

Figure 6 — Unit load passive RFID transponders position on a palletized load

The selection and placement of the passive RFID transponders label shall be such that the transponder, as positioned and mounted on the unit load, has a read range of at least 3 meters when no obstructions are present between the passive RFID transponder and a portal reader) at the maximum allowed radiated reader power in the regulatory environment for which it was designed to be used.

9.3.2 General rules for active RFID transponders used on returnable transport items (RTIs)

Active RFID transponders shall be embedded within the returnable transport item

9.3.3 Transponder data structure

9.3.3.1 ISO RTI transponder data structure

Data structures for ISO returnable transport items are defined in ISO 17364 and ISO/IEC 15459. Normally, UII – RTI is used, is left unlocked, and may accommodate the UII – Transport Unit data structures as well as the UII – Product Packaging.

9.3.3.2 EPC RTI transponder data structure

These are defined in the EPCglobal Tag Data Standards. Normally, the Serialized Shipping Container Code data structure SSCC-96 is utilized. Normally, the SSCC-96 transponder is left unlocked for reuse (see Clause 8.4.3).

Copyright International Organization for Standardization
Provided by IHS under license with ISO
No reproduction or networking permitted without license from IHS
© ISO/IEC 2008 – All rights reserved
Not for Resale

In the infrequent case that the unit load itself is a single stock-keeping unit (e.g. a palletized refrigerator; a master pack of 24 cases of light bulbs) and has associated with it a predefined Global Trade Item Number (GTIN), then the Serialized GTIN data structure SGTIN-96 may be utilized. Passive RFID transponders containing an SGTIN-96 data structure should be locked so that they will not be reprogrammed.

9.3.4 Wooden and plastic pallets

9.3.4.1 Wooden and plastic pallets in support of ISO 17364

It is assumed in this case that the unit load passive RFID transponder is placed on the unit load carried by the pallet. Permanent RFID transponders with UII - RTI data structures may be mounted on the pallets themselves without limitation to facilitate their tracking and return to the owners.

9.3.4.2 Wooden and plastic pallets in support of EPC

It is assumed in this case that the unit load passive RFID transponders are placed on the unit load carried by the pallet. Permanent RFID transponders with GRAI-96 data structures may be mounted on the pallets themselves without limitation to facilitate their tracking and return to the owners.

9.3.5 Special considerations for bin, cage, and tub pallet containers

When the unit load is contained within a metal or plastic cage, bin or tub, as shown in Figure 7, use of a hanging passive RFID transponders tag attached to the pallet container may be optionally used in place of attaching the passive RFID transponders to the container itself. When a passive RFID transponder is attached directly to the pallet container, it shall meet the same read range performance requirements of Clause 9.3.1.

When a hanging unit load passive RFID transponders tag is used, its natural rest position shall be that it is flat against the vertical pallet container wall with the printed side facing outward. Use of a non-metallic tie-on is recommended (see Clause 5.2.4). The selection of the transponder used in the passive RFID transponders tag shall be such that when placed in the hanging rest position, the tag has a read range performance requirements of Clause 9.3.1 when no obstructions are present between it and a portal reader.

Linearly polarized, circularly polarized, or omni-directional transponders may be used as long as the forgoing requirements are met.

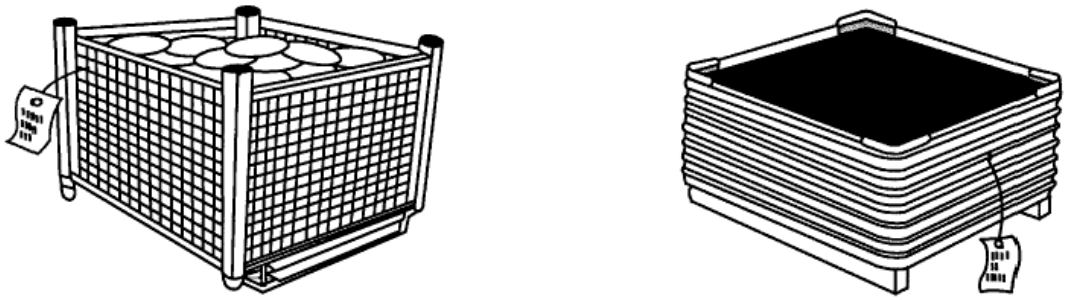

Figure 7 — Optional unit load passive RFID transponders tag usage on pallet containers

9.4 Permanent RFID transponders on pallets compliant to ISO 17364

Pallet owners and pallet rental companies may wish to install permanent RFID transponders on the pallets to facilitate their tracking and return to the owners. The ISO 17364 specifies a data structure called the Unique Item Identification – Returnable Transport Item (UII - RTI) that should be used for this purpose and permanently encoded in the permanent pallet-tracking transponder.

ISO 17364 transponders can either incorporate the data structures of the returnable transport item (by itself or in conjunction with either or both

--`,,```,,,,````-`-`,,`,,`,`,,`---
© ISO/IEC 2008 – All rights reserved
Copyright International Organization for Standardization
Provided by IHS under license with ISO
No reproduction or networking permitted without license from IHS
Not for Resale

1. The transport unit

2. The product package

Further, if a transponder utilizing UII - RTI is used, it may also be a separate transponder from the unit load passive RFID transponders/

In general, permanent transponders may be mounted in the pallet structure in either the geometric centre of the support structure or in the corner of the leader board. When two permanent pallet identification transponders are used, mounted at opposite corner of the leader boards, both transponders shall carry identical UII - RTI data. Extreme care must be used in programming and installing identical RFID transponders as errors which result in having two differently programmed transponders on the same pallet can have serious consequences of misidentification. Each UII - RTI passive RFID transponder will have identical UII - RTI data structures when multiple UII - RTI passive RFID transponders are used on a returnable container to identify that specific container. Placement of multiple passive RFID transponders shall conform to the requirements of Clause 8.5.

9.5 Permanent RFID transponders on pallets compliant to EPCglobal

Pallet owners and pallet rental companies may wish to install permanent RFID transponders on the pallets to facilitate their tracking and return to the owners. The EPC Tag Data Standards specify a 96-bit data structure called the Global Returnable Asset Identifier (GRAI-96) that should be used for this purpose and permanently encoded in the permanent pallet-tracking transponder.

If a transponder utilizing GRAI-96 is used, it is addition to the required unit load passive RFID transponders and its required transponder structure as specified in Clause 9.3.3.

In general, permanent transponders may be mounted in the pallet structure in either the geometric centre of the support structure or in the corner of the leader board. When two permanent pallet identification transponders are used, mounted at opposite corner of the leader boards, both transponders shall carry identical GRAI-96 data. Extreme care must be used in programming and installing identical RFID transponders as errors which result in having two differently programmed transponders on the same pallet can have serious consequences of misidentification. When multiple GRAI-96 passive RFID transponders are used on a returnable container to identify that specific container, each GRAI-96 passive RFID transponders will have identical GRAI-96 data structure. Placement shall conform to the requirements of Clause 9.3.1.

10 Non-conveyable and non-palletized materiel

10.1 General

Non-conveyable materiel is typically items that are too large, too heavy, and/or too irregularly shaped to be carried on a conveyor. The biggest difference between conveyable and non-conveyable materials lies in how the passive RFID transponders or tie-on tag is read.

10.2 RFID reader assumptions

Non-conveyable materials are typically read with handheld readers, carried to the passive RFID transponders or tag. These readers may incorporate bar code as well as RFID capability. This is typically a short range reading application. To improve reading performance, the user may lift tie-on tags away from the material and/or move or reorient the reader for reliable reading.

10.3 Guidelines for some common types of objects and transport units

MIL-STD-129 contains some guidelines for and examples of the shipping label placement on non-conveyable material. These should be utilized for placement of passive RFID transponders labels and tie-on tags (see Clause 5.2.4).

--`,,```,,,,````-`-`,,`,,`,`,,`---

Copyright International Organization for Standardization
Provided by IHS under license with ISO
No reproduction or networking permitted without license from IHS
© ISO/IEC 2008 – All rights reserved
Not for Resale

10.4 Label printed format and transponder data structure

The printed label format and transponder data structure selection should correspond to Clause 8.4.

10.5 Use of multiple passive RFID transponders

Use of multiple passive RFID transponders on the container or unit load should conform to Clause 8.5.

11 Representing EPCglobal data structures in bar codes

11.1 Unique Item Identifier (UII) representation

The EPC tag encodes a UII with a varying number of bits. Following a brief background discussion, the recommended bar code and human readable representations are described, which support Version 1.3 of EPCglobal Tag Data Standards (hereinafter referred to as TDS v1.3), which supports the UHF Gen 2 air interface, specified in *EPC™ Radio-Frequency identity protocols, Class-1 Generation-2 UHF RFID, Protocol for communications at 860 MHz – 960 MHz, Version 1.0.9*. The descriptions of data listed hereafter apply to UHF Gen 2 tags and may apply equally to HF Version 2 tags.

The use of 64-bit tags, as originally defined in UHF Gen 2, is in decline, with "sunset dates" having been set in several major applications. Therefore, the focus here will be on 96-bit and larger UHF Gen 2 tags.

11.1.1 Background

The EPCglobal Header identifies EPCglobal data structures. The original Generation 1 documentation defined variable-length headers (either 2 or 8 bits). Those starting with "01", "10" or "11" denoted 64-bit data structures. Headers starting with "00" are generally interpreted as an 8-bit header, denoting a 96-bit or longer data structure. Examples are shown here below (following the header format described in EPC Tag Data Standards Version 1.27. The header byte is presented here as a hexadecimal value.

- DoD-96 2Fh
- SGTIN-96 30h
- SSCC-96 31h
- GLN-96 32h
- GRAI-96 33h
- GIAI-96 34h

The EPCglobal UHF Gen 2 tag specification has defined a Protocol Control (PC) word of 16 bits preceding the EPCglobal Header. This PC word supports variable length EPCglobal-defined data structures, and includes a Toggle Bit that supports ISO/IEC 15961 AFI (Application Family Identifier) data structures outside the EPCglobal NSI (Number System Identifier) system. Support for AFI-encoded tags is included within this AIM REG Guideline for future support of UHF Gen 2 ISO/IEC 18000-6c transponders used in non-EPCglobal applications (see Annex E).

11.1.2 Recommended representations

Ideally, the bar code or human readable representation of the transponder data structures should be kept as close as possible to a transformation of the binary format for ease of parsing into binary subfields. Some options, all of which may not be supported in each bar code symbology, include:

- Bytes, directly representing 8 binary bits (values 0-255) per byte
- Hexadecimal digits, using 0123456789ABCDEF to represent 4-bits (values 0-15) per character
- Octal digits, using 01234567 to represent 3-bits (values 0-7) per character

© ISO/IEC 2008 – All rights reserved
Copyright International Organization for Standardization
Provided by IHS under license with ISO
No reproduction or networking permitted without license from IHS
Not for Resale

Twenty-nine decimal digits could also encode a 96-bit binary number, but parsing the backup data into binary subfields would require decimal to binary conversion first: It is much easier to convert an octal or hexadecimal representation to binary and then parse it than it is to start with 29 digits of decimal data and first convert it to a 96-bit binary number before parsing.

Finally, it is recognized that direct byte representation of the bits would not be well supported in many bar code symbologies, and would not conform to standard syntax used in many of today's AIDC applications. Byte encoding would result in non-printable characters within the human readable interpretation (HRI).

For bar code backup, the choice of octal encoding is based on several considerations:

- Pure-numeric symbologies must use octal encoding.
- Octal representation allows for more efficient encoding in many bar code symbologies, such as the use of the double-density numeric mode of GS1-128 and the numeric mode of PDF417, as described in ISO/IEC 15438 and MicroPDF417, as described in ISO/IEC 24728. For such symbologies, even though the number of data characters is greater when using octal than when using hexadecimal, fewer bar code symbol characters are required to encode that data.
- In GS1[2]-approved Data Matrix ECC200 symbols, as described in ISO/IEC 16022, the encoding efficiency of octal encoding is about the same as hexadecimal encodation.

This Guideline recommends the use of octal representation, as described in this subsection, when representing tag data in either bar code or human-readable form. The use of hexadecimal representation is also supported for legacy applications.

Throughout this guideline, a backup encoding is defined for a sequence of specific "fields" of tag data (such as a CRC or a Header). It is important to note that each field starts a new octal or hexadecimal encoding sequence, and that unused bit representations are binary zeroes in the last (low order) octal or hexadecimal digit of that field. For example, a 16-bit CRC-16 requires six octal digits to encode the field, but six octal digits have the capacity to encode 18 digits. Thus, the lower 2 bits of the sixth and last octal digit are always set to zero, and this sixth digit of a CRC-16 representation will always be either '4' or '0' (depending on whether the least-significant bit of the CRC-16 is one or zero, respectively).

11.1.3 Bar code Application Identifiers and Data Identifier needs

The encoding should prefix the data representation with the appropriate, fixed-length ISO/IEC 15418 Application Identifier (AI) or Data Identifier (DI). Note that numeric-only symbologies can only use specific Application Identifiers (AIs).

A single Application Identifier (AI) and a single Data Identifier (DI) will be defined by external agencies, indicating backup of RFID tag data structures stored in associated UHF Gen 2 and ISO/IEC 18000-6c transponders. These AI and DI definitions can be extended to include additional RFID tag formats in the future.

The data syntax of the AI and DI definition shall state that the first non-zero character of the data item is a Flag Character (see 11.1.4). The choice of leading Flag Character indicates the choice of representation (such as octal or hexadecimal), and also distinguishes between different tag data formats (such as fixed-length EPCglobal UHF Gen 2 data structures and variable-length UHF Gen 2 data structures).

In advance of the assignment of the appropriate AI and DI by external agencies, these Guidelines use a= dummy AI of "9999" for all examples.

[2] GS1 specifications can be found in the *GS1 General Specifications*

© ISO/IEC 2008 – All rights reserved
Copyright International Organization for Standardization
Provided by IHS under license with ISO
No reproduction or networking permitted without license from IHS
Not for Resale

11.1.4 Flag Character

Immediately following the AI or DI, one or more alphanumeric Flag Character(s) with a value in the range '0'…'9' or 'A'…'J' (excluding 'I', to avoid visual confusion with '1') shall immediately precede the representation of the tag data. See Table 1.

Table 1 — Flag character assignments

Flag Character	Tag Type	Representation
0	*Any*	*Pad character*
1	Reserved	Octal throughout
2	UHF Gen 2	Octal throughout
3	UHF Gen 2	Octal control bits, then ASCII
4-6	*Reserved*	*(Reserved, will be defined in Octal format)*
7	*Any*	Optional prefix: No CRC-16 in backup
8*f*	*Any**	Octal Control Bits only, for tag type 'f'
9n	*Reserved*	For future expansion: 'n' for10 more Types
A	Reserved	Hexadecimal throughout
B	UHF Gen 2	Hexadecimal throughout
C	UHF Gen 2	Hexadecimal control bits, then ASCII
D-F	*Reserved*	*(Reserved, will be defined in Hex format)*
G	*Any*	Optional prefix: No CRC-16 in backup
H*f*	*Any**	Hex Control Bits only, for tag type 'f'
Jn	*Reserved*	For future expansion: 'n' for 10 more types

*Note: Secondary flag 'f' has values 0, 1 or 2. See text.

The Flag Characters indicate two characteristics of the tag data backup: the ***representation*** of the bits (for example, in octal or in hexadecimal) and the ***interpretation*** of the subsequent data fields. The Flag Characters are defined according to the following considerations:

- Flag Character numeric value of '0' is assigned as a pad character to support numeric compaction, so that one or more leading '0' characters can optionally precede the valid Flag Character. For example, in Code 128 Mode C a leading '0' can be added (if needed) so as to result in an even number of compacted digits. The receiver discards all leading'0's before reading the Flag Character value.

- Any number of leading '0's may precede the Flag Character in the human readable interpretation, so that the characters can be grouped for ease of key entry.

- Flag Characters in the range of '1'…'9' indicate an octal representation of the tag data bits. Note that numeric-only symbologies may only use octal representations with numeric Flag Characters in the range '1'...'9'.

- Flag Characters in the range 'A'…'J' indicate hexadecimal representation, and the flag character value itself is encoded as an alphanumeric character.

The particular choice of Flag Character, within the octal or hexadecimal range, indicates the tag data format. The currently defined Flag Characters are as follows:

- Flag Characters '1' and 'A' are reserved for future use.

© ISO/IEC 2008 – All rights reserved

Copyright International Organization for Standardization
Provided by IHS under license with ISO
No reproduction or networking permitted without license from IHS
Not for Resale

- Flag Character values '2' or 'B' indicate binary UHF Gen 2 UII data structures, including any ISO/IEC 18000-6 transponder formats, where the Protocol Control bits indicate the data length and interpretation.

- Flag Characters '3' and 'C' represent ASCII-based variants of the Gen 2 formats '2' and 'B' respectively. In these variants, only the CRC-16 and "control bits" are represented in bitwise fashion (in Octal or Hex, respectively), and the remaining tag data is represented directly as ASCII characters. In the case of '3' and 'C' flags, the flag is followed by three more indicator characters, to inform the receiver as to the precise number of control bits that precede the start of the ASCII representation, and the ASCII representation's tag bits per character (e.g., whether 7-bit or 8-bit ASCII has been used).

- Flag Characters '4' through '6' and 'D' through 'F' are reserved for future use.

- Flag Characters '7' and 'G' indicate that the backup data is in a format indicated by a second Flag character (from Table 1) that immediately follows the '7' or 'G', but omits that format's representation of the CRC-16.

- Flag Characters '8' and 'H' represent ***supplemental*** backup data, in octal or hexadecimal representation respectively, where only certain "control bits" (including the PC bits) have been represented.

    - Supplemental backup data requires input from additional data sources, such as pre-existing bar codes for item and/or serial number, in order to reconstitute fully the original tag data. After parsing the supplemental backup data, the reader (or host) will have sufficient information to determine what additional data is needed, and to determine how the full tag data format can be reconstructed.

    - These flag characters '8' or 'H' shall be immediately followed by a second flag character 'f', from the list in Table 1 above, to indicate the proper interpretation of these control bits. For example f=2 indicates UHF Gen 2 tags.

    - The "control bits" in the backup representation shall always include the following fields, in the following order:
        - The 16-bit CRC-16 (omitted, if the '8' or 'H' Flag Character is prefaced by a '7' or 'G')
        - The 16-bit Protocol Control Word, if defined for the tag format
        - Any non-data bit values defined for the tag format in the same order as encoded in the tag, represented in the backup as a single binary field.

    - See 11.3 for UHF Gen 2 encoding details.

- Note that Flag Characters '7' or 'G' and '8' or 'H' serve as "modifier flags" for "format flags" '1' through '6' or 'A' through 'F', and may be concatenated if appropriate. As an example, an octal supplemental backup, without CRC-16, of Gen 2 data would be prefaced by the flag sequence '782'. When both modifier flags are used, the CRC modifier ('7' or 'G') shall precede the supplemental-backup modifier ('8' or 'H').

Accommodation of future needs will be by assignment of additional Flag Character values by the AIM Global RFID Expert Group in future revisions of this document.

11.1.5 EPCglobal tag data memory organization

UHF Gen 2 transponders have a simple memory organization from the point of view of tag backup. Transponder memory organization is "big-endian," each field starting with their most significant bit in the lowest bit address. Data from a tag is read out in bit order, and is typically represented in that same order in bar code or human-readable backup.

Copyright International Organization for Standardization
Provided by IHS under license with ISO
No reproduction or networking permitted without license from IHS
© ISO/IEC 2008 – All rights reserved
Not for Resale

In Gen 2 tags, a CRC-16 checksum is stored in memory bits 0-Fh and is followed by the bits of the UII, starting with the Header.

11.2 EPCglobal UHF Gen 2 bar code backup of binary UII data

The EPC Tag Data Standards Version 1.3 for support UHF Gen 2 transponders allows both binary UII data structures, as well as mixed binary and alphanumeric data structures such as the SGTIN-198, GRAI-170, and GIAI-202. The methods for barcode backup of all Gen 2 UII structures as binary data are given in this section. Optional methods for bar code backup of the mixed binary/alphanumeric Gen 2 UII data structures are as mixed binary and 7-bit ASCII are given in 3.4.

11.2.1 EPCglobal UHF Gen 2 data memory organization

UHF Gen 2 tags RFID tags can have more UII data memory capacity than may be needed to encode a given EPCglobal data structure. The UHF Gen 2 memory word organization is “little endian”, with the lowest address bit corresponding to the least significant bit value in each 16-bit memory word. See the UHF Gen 2 memory map in Figure D.1 in Annex D.

UII memory bits 00-0Fh contain the CRC-16. Memory bits 10-17h contain the Protocol Control (PC) bits, as shown in Figure D.2. The Protocol Control (PC) bits control the organization and interpretation of the UII memory bank.

The lower 8 PC bits 10-17h controls the UII memory bank organization.

- Bits 10-14h, stored in UII memory locations 10-17h of the transponder, determine the range of memory over which the UII is defined (in units of 16-bit words), and thus the range of data checked by the CRC-16 that is stored in bits 00-1Fh of the UII memory bank (see Annex D). For 96-bit UII data structures, PC bits 10-14h have the value ‘00110’.

- Bits 15-16h are reserved for future use (at the time of this writing bit 15h has been proposed to be used to indicate the presence of User Memory).

- The Toggle Bit 17h controls the UII data memory interpretation.

    - When PC bit 17h is set to binary ‘0’, it indicates that the tag contains a data structure using an EPCglobal Numbering System Identifier defined under an EPC Tag Data Standards Version 1.3 or higher

        - The upper 8 PC bits 18-1Fh are reserved for future use, and are set to binary ‘0’.
        - The UII header byte and the remainder of the variable length EPCglobal data structure follow starting in the next UII memory word, which begins at transponder memory bit 20h. See Figure D.1 in Annex D

    - When the Toggle Bit 17h is set to one, it indicates that the tag encodes an ISO/IEC 15961 AFI (Application Family Identifier; see Annex E)

        - The upper 8 PC bits 18-1Fh contain an ISO/IEC 15961 AFI
        - The remainder of the variable length data structure follows starting in the next UII memory word.

Note that while the definition of support for AFI-based applications is outside the scope of this document, the methods developed here for UII bar code backup are also appropriate for use with ISO/IEC 18000-6c transponder data structures using AFIs (see Annex E)

Because the PC bits control the UII memory organization and interpretation, 16 PC bits in the backup bar code and/or human readable representations preface all types of UHF Gen 2 data structures.

© ISO/IEC 2008 – All rights reserved

Copyright International Organization for Standardization
Provided by IHS under license with ISO
No reproduction or networking permitted without license from IHS
Not for Resale

11.2.2 Full backup of UHF Gen 2 binary UII data structures

Full backup representations of all Gen 2 EPCglobal data structures as binary data are prefaced by a '2' or 'B' Flag Character, and formatted as shown in Table 2; the bit ordering of the data in the bar code is the same as in the RFID transponder memory (see Annex D). As is the case throughout this Guideline, each defined data field starts a new octal or hexadecimal encoding sequence, and unused bit representations are binary zeroes in the last octal or hexadecimal digit of that field (e.g. 16-bit CRC-16 requires 6 octal digits to encode; the lower 2 bits of last octal digit for each field are zero). Note that the CRC-16 field is omitted from the Gen 2 backup representations described below, if the '2' or 'B' Flag Character is prefaced by a '7' or 'G'.

Table 2 — UHF Gen 2 transponder backup data structure

AI or DI	Flag* = '2'	Octal repr. of CRC-16 value	Octal repr. of 16 PC bits	Octal representation of variable bit length Gen 2 UII binary data structure	GS**

AI or DI	Flag* = 'B'	Hexadecimal repr. of CRC-16	Hexadecimal repr. of 16 PC bits	Hex representation of variable bit length Gen 2 UII binary data structure	GS*

*Notes about the "Flag" field:

- One or more leading zero digits may precede the Flag Character if required for efficient compacted numeric encoding
- The flag choices of '2' or 'B' indicate that the data following the PC bits is treated as a continuous sequence of bits in a single field.
- Note that the CRC-16 field is omitted from the Gen 2 backup representations shown above, if the '2' or 'B' Flag Character is prefaced by a '7' or 'G' respectively.

**If required. In bar codes using more than one field each starting with AIs or DIs, each field is terminated either by the end of symbol or a GS (Group Separator, ASCII value 29) control character.

A printed example of an EPCglobal UHF Gen 2 GS1-128 full backup bar code with octal HRI is shown in Figure 8 in Clause 14.2.1.

11.2.3 Supplemental Backup of UHF Gen 2 binary UII data structures

When the application requires that other bar codes or human readable interpretation be present that already contain the information contained in the tag data structure, then only the additional structural or control information carried in the tag (such as the header, filter and partition bits) need be carried as backup to enable exact reconstruction of the tag data structure. A common example is when an SGTIN-96 tag is backed up by one or more bar codes containing AI (01) GTIN and AI (21) Serial Number data structures.

Supplemental backup representations of EPCglobal binary data structures for UHF Gen 2 tags are prefaced by a '82' or 'HB' Flag Character sequence, and formatted as shown in Table 3, with the left-to-right bit ordering of the data in the bar code to be the same as in the RFID transponder memory (see Annex D). Each field starts a new octal or hexadecimal encoding sequence, and that unused bit representations are binary zeroes in the last octal or hexadecimal digit of that field (e.g. 16-bit CRC-16 requires 6 octal digits to encode; the lower 2 bits of last octal digit of that field are always set to zero). Note that the CRC-16 field is omitted from the Gen 2 supplemental backup representations described below, if the '82' or 'HB' Flag Character sequence is prefaced by a '7' or 'G'.

When using EPCglobal data structures, the "control bits" field is interpreted by first examining the field's most significant bits (representing the Header), which determine the number and meaning of the subsequent bits.

--`,,```,,,,````-`-`,,`,,`,`,,`---
© ISO/IEC 2008 – All rights reserved
Copyright International Organization for Standardization
Provided by IHS under license with ISO
No reproduction or networking permitted without license from IHS
Not for Resale

The control bits shall immediately follow the PC bits, and shall include the Header bits, and (if defined for the chosen Header) the Filter bits and Partition bits. See the example in Clause 14.2.2.

When using AFI data structures, the definition of the "control bits" is part of the definition of how the data structure is encoded in an RFID transponder, and is beyond the scope of this document.

If tag data recovery becomes necessary, the reader will parse the supplemental backup data to determine what information, beyond the end of the encoded bits in the backup, is needed in order to reconstruct the tag data. Note that the supplemental-backup CRC-16 is calculated over the full tag data, not just over the bits represented in the supplemental backup; in all cases, the CRC-16 for Supplemental backup is identical to the CRC-16 for Full backup of the same tag data.

Table 3 — UHF Gen 2 supplemental backup of EPCglobal data structures

AI or DI	Flag* = '82'	Octal repr. of CRC-16 value	Octal repr. of 16 PC bits	Octal representation of "control bits" (header and other header-dependent bits such as Filter)	GS**

AI or DI	Flag* = 'HB'	Hex rep. of CRC-16	Hex repr. of 16 PC bits	Hex representation of "control bits" (header and other header-dependent bits such as Filter)	GS**

*The Flag is nominally a two character sequence: if using Octal encodation of Gen 2 data, then the sequence is '8' (indicating Supplemental backup data) followed by '2' (the appropriate format flag from Table 1); if using Hexadecimal, then the sequence is 'H' (the hex equivalent of '8') followed by 'B' (the hex equivalent of '2'). If the CRC-16 is to be omitted from the representation, then a three-character Flag sequence '782' or 'GHB' is used.

**In bar codes using one or more fields each with AIs or DIs, the data string is terminated either by the end of symbol or a GS (Group Separator, ASCII value 29) control character.

A printed example of an EPCglobal UHF Gen 2 GS1-128 supplemental backup bar code with octal HRI is shown in Figure 9 in Clause 14.2.2. In this example, the "control bits" that follow the PC bits consist of an 8-bit Header, a 3-bit Filter value, and a 3-bit Partition value; these are treated as a single 14-bit value, and encoded into five octal digits.

11.3 Optional backup of Gen 2 mixed binary/alphanumeric UII data

The EPC Tag Data Standards Version 1.3 for support UHF Gen 2 transponders allows mixed binary and alphanumeric UII data structures such as the SGTIN-198, GRAI-170, and GIAI-202. In this case, the initial fields of the data structures are binary, but the terminating serial number fields use the GS1 alphanumeric character set (see Appendix G of the EPCglobal Tag Data Standards Version 1.3). This alphanumeric character set is encoded using ISO/IEC 646 7-bit characters, which are a proper subset of the 7-bit ASCII encoding in the range 21h to 7Ah. Note that a bar code capable of encoding 7-bit ASCII (such as GS1-128) is required. The SGTIN-198, GRAI-170, and GIAI-202 may be though of as having a variable length binary segment followed by a variable length 7-bit ASCII segments.

The methods developed for bar code backup of UHF Gen 2 EPCglobal transponder data are also applicable to ISO 18000-6C tags using with AFIs (see Annex E). Such tags commonly employ 8-bit ASCII encodation, but 7-bit and other representations may be used, depending on the AFI.

Thus, many UHF Gen 2 transponder formats can benefit from an ASCII-based representation. Flag Characters '3' and 'C' represent ASCII-based variants of the Gen 2 formats '2' and 'B' respectively. In these

--`,,```,,,,````-`-`,,`,,`,`,,`---

© ISO/IEC 2008 – All rights reserved

Copyright International Organization for Standardization
Provided by IHS under license with ISO
No reproduction or networking permitted without license from IHS
Not for Resale

variants, only the CRC-16 and "control bits" are represented in bitwise fashion (in Octal or Hex, respectively), and the remaining tag data is represented directly as ASCII characters. In the case of '3' and 'C' flags, the flag is followed by three more indicator characters, to inform the receiver as to the precise number of control bits that precede the start of the ASCII representation, and the ASCII representation's tag bits per character (e.g., whether 7-bit or 8-bit ASCII has been used). A '3' or 'C' flag is therefore immediately followed by three decimal digits ***nnm***, where:

— **nn** indicates the number of bitwise-encoded control bits (not counting the 16 CRC bits). This number shall be represented as two decimal digits, for values in the range 0..99

— **m** indicates the number of tag bits per ASCII character. For example, a value of '7' or '8' indicates that the remaining tag data (following the control bits) is represented in 7-bit or 8-bit ASCII, respectively.

The mixed binary/alphanumeric backup data structure for these UII formats is shown in Table 4.

Table 4 — UHF Gen 2 binary/alphanumeric backup data structure

AI or DI	Flag* '3nnm'	Octal repr. of CRC-16 value	Octal repr. of 16 PC bits	Octal repr. of variable length binary segment	m-bit ASCII repr. of the variable length alphanumeric segment	GS **

AI or DI	Flag* 'Cnnm'	Hex. repr. of CRC-16 value	Hex. repr. of 16 PC bits	Hex. repr. of variable length binary segment	m-bit ASCII repr. of the variable length alphanumeric segment	GS **

*One or more leading zero digits may precede the Flag Character if required for efficient compacted numeric encoding

**If required. In bar codes using more than one field each starting with AIs or DIs, each field is terminated either by the end of symbol or a GS (Group Separator, ASCII value 29) control character.

First the flag characters '3nnm' or Cnnm,' is encoded, as described above. The CRC-16 and PC bits are then encoded as described in Clause 11.2.2. The variable length binary segment is then encoded in octal or hexadecimal, with trailing binary '0' padding to fill out the last character, if required. The variable length alphanumeric segment is then placed in the bar code using the appropriate method for m-bit ASCII data encoding. Because the length of the alphanumeric segment is variable, the backup representation must be terminated either by the end of symbol or a GS (Group Separator, ASCII value 29).

11.4 Regenerating or updating RFID-enabled labels

11.4.1 Regenerating failed tags

When the transponder data structure is reconstructed from data contained in backup bar code and/or human readable interpretation, in order for it to be an accurate facsimile of the original transponder, then the exact same header byte and data structure should be replicated, resulting in the same CRC-16 value. Note that the regenerated transponder should now again agree with the printed backup bar code and/or human readable interpretation from which it was created.

11.4.2 Use of the tag identification field (TID)

Certain applications utilize the unique factory programmed tag identification number as well as the UII data structure. On such application is to prevent product counterfeiting. In this case, even though the UII data can be recovered from the backup bar code or human-readable data, bad tag replacement is not feasible unless the database can be told of the new and valid TID as replacing the TID of the bad tag.

© ISO/IEC 2008 – All rights reserved
Copyright International Organization for Standardization
Provided by IHS under license with ISO
No reproduction or networking permitted without license from IHS
Not for Resale

11.4.3 Modified UII data structure

When more content is added or the data content of a functional transponder is changed during re-writing, the backup bar code may no longer reflect what is currently stored in the transponder. Creating a new data structure or altering an existing one in a regenerated transponder renders the original backup bar code obsolete. Note that:

- The changed transponder data structure should carry the appropriate EPCglobal header byte reflecting its current data structure.

- Destroying the obsolete bar code or over labelling it with a new backup bar code (only) may be required to backup the current data structure stored in the tag.

11.4.4 Replacing bad RFID enabled labels

If a complete new RFID-enabled label is generated, then the old label should be removed before the new label is applied. Note that a new RFID enabled label should never be placed on top of an existing one, as the mutual coupling between the antennas with detune the functional transponder, interfering with its ability to communicate.

12 Human readable interpretation (HRI) backup

12.1 Need for HRI

Human readable interpretation (HRI) of the transponder data structure is needed when either:

- Manual data entry, rather than bar code systems, are the backup for an RFID tag reader

- RFID and/or bar code readers may not always be available at all points where the transponder data needs to be read

Under these conditions, it is important that key entry of the HRI also be available. In addition, HRI can also be employed as a secondary backup to bar codes.

12.2 Manual data entry considerations

HRI backup can be supported with either octal or hexadecimal encoding using the appropriate leading Flag Character. The biggest problems are data input errors made in manual data entry. Ideally, one should enter the fewest data characters in order to minimize keystroke errors. The choice of octal or hexadecimal HRI encoding depends on several applications-related considerations:

- Representations such as hexadecimal may be preferable for manual data entry with computer-type keyboard devices.

- Some hand-held devices have keypads that are only efficient at entering numeric data. In this case, the use of an octal human readable interpretation is preferable to the shorter hexadecimal representation and less prone to data entry errors.

  For example, the octal HRI representation requires about 33% more characters than hexadecimal representation. However, on many bar code scanner and portable data terminal keypads and keyboards, the all-numeric octal message may require fewer total keystrokes to enter, even though it has more characters than a hexadecimal message.

- If it is permissible for the HRI to use a different number of leading ‘0’s. For example, using octal encoding for the bar code, but hexadecimal encoding for the HRI will typically utilize the least total label area. Regardless of such formatting differences, the tag data bits represented by the HRI will always be identical to the tag data bits represented by the corresponding bar code.

© ISO/IEC 2008 – All rights reserved

Copyright International Organization for Standardization
Provided by IHS under license with ISO
No reproduction or networking permitted without license from IHS
Not for Resale

In general, octal HRI representation is to be preferred over hexadecimal HRI representation. In any case, the HRI representation should be the same as in the bar code.

It is recommended that the human readable characters be printed in groups of 4 separated by spaces for ease reading and accuracy of data entry. It is also generally recommended that OCR-B font or a similar sans-serif gothic be used in as large a point size as the available space permits.

Since keystroke errors cannot be prevented, the tag's CRC-16 checksum will be included in all forms of the human readable interpretation of the tag data structure.

12.3 HRI for EPCglobal UHF Gen 2 UII data

The HRI representations for Gen 2 backup are identical to the Gen 2 bar code representations described in Clause 11.2, except for formatting differences such as internal spaces and leading zeroes added to improve ease of key entry. The HRI for Gen 2 data will always begin with the appropriate AI or DI, within parentheses, followed by space-separated groups of octal or hex characters. The first non-zero characters after the AI or DI represent the same Flag Character sequences used for bar code backup:

- If '2' or 'B', it indicates full backup of a UHF Gen 2 tag data structure as binary data, represented in Octal or Hexadecimal, respectively.
- If '3n' or 'Cn', where n= 0…6, it indicates full backup of a UHF Gen 2 tag, but where the trailing portion of a mixed binary/alphanumeric tag data structure is represented as discrete ASCII bit patterns, rather than as a continuous binary field. This alternative is more fully described in 11.3.
- If '39' or 'C9', it indicates full backup of a UHF Gen 2 tag using AFIs, and the alphanumeric tag data structure is represented as 8-bit ASCII bit patterns, as described in Annex E.1.1.
- If '8' or 'H', it indicates supplemental tag backup, represented in Octal or Hexadecimal, respectively. In this case, a second flag character ('2' or 'B', respectively) indicates backup of a UHF Gen 2 tag.

Following these flag characters is a representation of the CRC-16, followed in turn by a representation of the sixteen PC bits, then followed by the remaining full or supplemental backup data. These are encoded as three separate fields, each one starting a new octal or hex encoding sequence.

Printed examples of EPCglobal UHF Gen 2 Class backup bar codes with octal HRI are shown in clauses 14 and 15.

13 Data for bar code and human readable backup examples

13.1 SGTIN-96 example

Examples will be shown of an SGTIN-96 data structure encoded in UHF Gen 2 tags, as backed up in bar code and human readable. The following data is used in both examples:

- GTIN = 10614141007346
- Item serial number = 8537604

According to the EPCglobal Tag Data Standards, Version 1.3, the 96-bit data structure for an SGTIN-96 for both generations of tags is formed as follows, where:

- The 8-bit Header value is 30h
- The 3-bit Filter value is 3
- The 3-bit Partition value is 5, specifying a 24-bit Company prefix and 20-bit Item Reference
- The 24-bit Company Prefix is 0614141 decimal
- The 20-bit Item Reference number is 100734 decimal
- The 38-bit item Serial Number is 8537604 decimal

© ISO/IEC 2008 – All rights reserved
Copyright International Organization for Standardization
Provided by IHS under license with ISO
No reproduction or networking permitted without license from IHS
Not for Resale

Displaying the entire SGTIN-96 as a 96-bit binary string:

Header	Filter	Partition	Company prefix	Item Reference
00110000	011	101	000010010101111011111101	00011000100101111110

Serial Number (8247604)

00000000000000100000100100011000000100

Taking substrings in groups of 3 or 4 bits respectively forms the 32-digit octal and 24-character hexadecimal values of the complete SGTIN-96:

Octal: 14072045367721422770000040443004

Hexadecimal: 3074257BF4625F8000824604

13.2 UHF Gen 2 tag backup

For UHF Gen 2, the data must first be converted to the form it will appear in the UHF Gen 2 memory map, as shown in Annex D, in order to calculate the CRC-16. This means that the 16 PC bits must be calculated first.

The total data structure is 96-bits long, including its leading 8-bit header. Therefore, six additional 16-bit words follow the CRC-16 and PC bits, in order to encode the 96 bits of the data structure; this value of '6' is encoded in the five most-significant PC bits.

Following Table 2 in Clause 11.2, the 16 PC bits (bits 10-1Fh of the UII memory bank) are thus:

00110 000 00000000 = 3000h

Note that bits 10-14h of tag memory are '00110' indicating a 96-bit (6-word) data structure, and bit 17h is '0', indicating an EPCglobal data structure. This is converted to a 6-digit octal field value by first converting it to 16-bit binary and appending 2 binary zeroes to form the 18-bit number, then evaluating each 3-bit substring:

001100000000000000 = 140000 octal

The CRC-16 is now computed over the concatenated 16 PC bits and the 6 UII memory words (112 bits total). The concatenated bits (before pre-pending the CRC-16), as represented in hexadecimal, are:

3000 3074 257B F462 5F80 0082 4604h

Using the online software described at

http://www.lammertbies.nl/comm/info/crc-calculation.html

the CRC-16 is calculated to be 821B hexadecimal. This is converted to a 6-digit octal field value by first converting it to 16-bit binary and appending 2 binary zeroes to form the 18-bit number, then evaluating each 3-bit substring:

100001000011011100 = 404154 octal

The hexadecimal representation of the Header bits is 30h. Converting that to 8-bit binary and adding a binary '0' at the right end forms 001 100 000 which is octal 140.

Using "9999" to simulate the to-be-defined AI, a Flag Character of '2', and the octal SGTIN-96 representation in 13.1 of "14072045367721422770000040443004", the HRI octal representation is:

(9999) 2 404154 140000 14072045367721422770000040443004

© ISO/IEC 2008 – All rights reserved
--`,,```,,,,````-`-`,,`,,`,`,,`---
Copyright International Organization for Standardization
Provided by IHS under license with ISO
No reproduction or networking permitted without license from IHS
Not for Resale

This is regrouped into the final octal HRI:

(9999) 0002 4041 5414 0000 1407 2045 3677 2142 2770 0000 4044 3004

where the Flag Character is '2' and two leading '0' are used to format the data into groups of 4.

The equivalent hexadecimal HRI data is

(9999) B 821B 3000 3074257BF4625F8000824604

where the Flag Character is "B" with three leading '0's required to format the data into groups of 4 to produce the final hexadecimal HRI:

(9999) 000B 821B 3000 3074 257B F462 5F80 0082 4604

14 Linear bar code recommendation

14.1 General

Code 39, described in ISO/IEC 16388, and other linear symbologies could be used with Application Identifiers or Data Identifiers for backup bar codes. However, most linear bar code symbologies lack the spatial efficiency of Code 128, as described in ISO/IEC 15417, especially for pure decimal or octal numerics that are encoded at 2 digits per symbol character.

Therefore, GS1-128 with octal HRI is the preferred method for linear bar code backup.

This numeric-only Code 128 bar code starts in Mode C. The GS1-128 symbol structure is:

- Start Quiet Zone
- Start character for Code 128 Mode C
- FNC1 symbol character to indicate GS1-128 format
- A 4-digit decimal AI is assumed
- A 2-digit octal Flag Character (indicating tag Generation including a leading zero if Gen 2)
- a number of octal digits to represent the tag data structure as an octal bar code data structure
- No GS at the end; the data structure terminates with the end of the bar code symbol
- Code 128 mod 103 check character and Stop character
- Stop Quiet zone

The bar code data structures are encoded using ***n*** double-density numeric symbol characters for the 2***n*** data digits, plus 1 additional symbol character for the FNC1 preceding the data. At 11X per symbol character, this uses 11(n+1)X. In addition, there is 35X overhead for the Code 128 Start, Stop and mod 103 check characters plus the minimum 10X each for the Start and Stop Quiet Zones, for a total symbol length of (11n + 66)X.

14.2 UHF Gen 2 backup using GS1-128 bar codes

14.2.1 Full Backup of UHF Gen 2 UII data

In addition to the symbol overhead as discussed above, a UHF Gen 2 GS1-128 backup bar code of a 96-bit data structure (see Figure 2 in Clause 11.2.2) would require 50 octal digits for the data structure, as shown in Table 5.

--`,,```,,,,````-`-`,,`,,`,`,,`---
Copyright International Organization for Standardization
Provided by IHS under license with ISO
No reproduction or networking permitted without license from IHS
© ISO/IEC 2008 – All rights reserved
Not for Resale

Table 5 — UHF Gen 2 96-bit tag backup data structure in GS1-128

AI	Flag = '02'	Octal repr. of 16 PC bits	Octal repr. of of 16 PC bits	Octal representation of 96-bit UII data structure	GS
4d	*2d*	*6d*	*6d*	*32d*	*Not required*

Note: *In bar codes using one or more fields each with AIs or DIs, the data string is terminated either by the end of symbol or a GS (Group Separator, ASCII value 29) control character, adding 1 symbol character.

The data format for a GS1-128 bar code is given in Table 5, and uses the octal HRI determined for the SGTIN-96 example in Clause 13.2 above:

(9999) 0002 4041 5414 0000 1407 2045 3677 2142 2770 0000 4044 3004

Eliminating the parentheses, spaces and the extra pair of leading zeroes before the Flag Character '2', the barcode data structure is formed:

99990240415414000014072045367721422770000040443004

The resulting bar code, with a 0,25 mm X-dimension, is shown full size (at 15% height to width ratio) together with the recommended printed form of octal HRI (using 9-point Arial Bold) in Figure 8:



(9999) 0002 4041 5414 0000 1407 2045 3677 2142 2770 0000 4044 3004

Figure 8 — UHF Gen 2 GS1-128 full backup bar code with octal HRI

The resulting GS1-128 backup bar code has an overall length of 341X or 85,25 mm at the same 0.25 mm X-dimension, including Quiet Zones.

14.2.2 Supplemental Backup of UHF Gen 2 UII data

Supplemental backup representations of EPCglobal 96-bit binary data structures for UHF Gen 2 tags follow Table 2 in Clause 11.2.2 and are formatted into 24 digits as shown in Table 6. Each field starts a new octal or hexadecimal encoding sequence, and unused bit representations are binary zeroes in the last octal or hexadecimal digit of that field (e.g. 16-bit CRC-16 requires 6 octal digits to encode; the lower 2 bits of last octal digit of that field are always set to zero).

Table 6 — UHF Gen 2 supplemental backup data structure in GS1-128

AI	Flag = '082'	Octal repr. of 16 PC bits	Concatenated octal representations of Header, Filter, and Partition bits	GS*
4d	*3d*	*6d*	*5d*	*See* *

Note: *In bar codes using one or more fields each with AIs or DIs, the data string is terminated either by the end of symbol or a GS (Group Separator, ASCII value 29) control character, adding 1 symbol character.

A leading octal '0' pad is required for the 2 Flag Character digits '82', as there would otherwise be an odd number of digits in the bar code.

In some applications, it may be preferable to omit the CRC-16 from the backup representation. In cases where the Company Prefix is always a fixed length, omitting the CRC-16 can result in a supplemental backup representation that never changes from item to item, thus allowing the backup representation to be pre-printed on the item or label. The supplemental backup that omits the CRC-16 is shown in Table 7. The backup structure is the same as shown above, except that a prefix of '7' or 'G' is pre-pended to the Flag Character,

© ISO/IEC 2008 – All rights reserved

Copyright International Organization for Standardization
Provided by IHS under license with ISO
No reproduction or networking permitted without license from IHS
Not for Resale

the six digits of CRC-16 are omitted, and the formatting (for leading zeroes and internal spaces) is recalculated.

Table 7 — UHF Gen 2 supplemental backup data structure, omitting CRC-16

AI	Flag = '782'	Octal repr. of 16 PC bits	Concatenated octal representations of Header, Filter, and Partition bits	GS*
4d	*3d*	*6d*	*5d*	*See **

Note: *In bar codes using one or more fields each with AIs or DIs, the data string is terminated either by the end of symbol or a GS (Group Separator, ASCII value 29) control character, adding 1 symbol character.

Using the UHF Gen 2 example data in Clause 13.1 and 13.2, the numeric field values for supplemental backup (including CRC-16) are in order as follows (note that the Header, Filter, and Partition fields are listed separately, but actually encoded as the "Combined" field listed beneath them):

Table 8 — UHF Gen 2 supplemental backup data structure

AI	9999	decimal
Flag	082	decimal
CRC-16	404154	octal
PC bits	140000	octal
Header	140	octal
Filter	3	
Partition	5	
Combined:	14072	octal

The GS1-128 bar code data structure is "99990824041541400014072". The resulting bar code with X= 0.010 inches is shown full size (at 15% height to width ratio) together with the recommended printed form of octal HRI (using 9-point Arial Bold) in Figure 9:



Figure 9 — UHF Gen 2 GS1-128 supplemental backup bar code with CRC-16 and octal HRI

The resulting GS1-128 supplemental backup bar code has an overall length of 198X or 49,5 mm at the same 0,25 mm X-dimension, or 75,24 mm at the preferred 0.38 mm X-dimension, including Quiet Zones.

In some applications, it may be preferable to omit the CRC-16 from the backup representation. This feature is particularly useful in that it allows *pre-printing* of the backup barcode, as there is now no variable information (the CRC-16). Furthermore, the CRC-16 is only needed if a new tag or full backup bar code is required. In these cases, the CRC-16 can be generated by the printer/encoder. Starting from the example above, but using the flag prefix '7' to indicate that the CRC-16 was omitted, the resulting GS1-128 bar code data structure is "999978214000014072". The resulting bar code with X= 0.010 inches is shown full size (at 15% height to width ratio) together with the recommended printed form of octal HRI (using 9-point Arial Bold) in Figure 10:



Figure 10 — UHF Gen 2 GS1-128 supplemental backup example, omitting CRC-16

© ISO/IEC 2008 – All rights reserved
Copyright International Organization for Standardization
Provided by IHS under license with ISO
No reproduction or networking permitted without license from IHS
Not for Resale

14.3 Partial backup

The combination of a GTIN, Application Identifier (01), and a serial number, application Identifier (21), of the appropriate length can be used to represent the data contained in the tag SGTIN. In some cases, a bar code symbol containing the GTIN and serial number is already on a container. This symbol can be used at any point in the supply chain to retrieve item data using a bar code scanner or its human readable characters can be used to retrieve the data manually.

The resulting bar code, with a 0,25 mm X-dimension, is shown full size (at 15% height to width ratio) together with the recommended printed form of octal HRI (using 9-point Arial Bold) in Figure 11:



Figure 11 — Partial backup symbol encoding the tag SGTIN data using AIs (01)(21)

In certain situations where access to a database is enabled, the Partial Backup symbol can be used to re-generate a tag and/or a full or supplemental backup bar code symbol. See Annex C.3 for more information.

14.4 Linear bar code printing recommendations

Ideally, print backup bar codes with as large an X-dimension and bars as tall as label space permits.

- It is recommended that the X-dimension be no less than 0,25 mm, and ideally 0,38-0,50 mm.
- In general, the bar height should be a minimum of 15% of the symbol length.

15 Two-dimensional bar code symbol backup

15.1 GS1 supported symbologies

All of the GS1 supported symbologies, both linear and 2D, can carry the AI-based data structures discussed above in Clause 11.2. Both Data Matrix and RSS Expanded, as described in ISO/IEC 24724, can support hexadecimal encoding; however most GS1 symbologies are more space-efficient when encoding only octal digits. Again, the key issue is the available scanner support.

15.1.1 Use of Data Matrix

Data Matrix can support all the bar code data structures described in Clauses 11 and 14. As an example, using the data format for a GS1-128 bar code given in Table 5 in Clause 14.2.1, the UHF Gen 2 full backup barcode data structure for the SGTIN-96 is:

FNC1999924041541400001407204536772142277000004044 3004

The resulting bar code with a 0,5 mm modules, and default error correction, is shown full size together with the recommended printed form of octal HRI (using 9-point Arial Bold) in Figure 12:



(9999) 0002 4041 5414 0000 1407 2045 3677 2142 2770 0000 4044 3004

Figure 12 — UHF Gen 2 Data Matrix full backup bar code

© ISO/IEC 2008 – All rights reserved

Copyright International Organization for Standardization
Provided by IHS under license with ISO
No reproduction or networking permitted without license from IHS
Not for Resale

15.1.2 Use of EAN.UCC Composite

An EAN.UCC Composite, as described in ISO/IEC 24723, CCA component could be added on top of an existing GS1-128, RSS, or EAN/UPC bar code to carry the backup data structure. Note that as of today, many deployed scanners do not yet support the EAN.UCC Composite symbologies. However, it is quite likely that a newly purchased combined RFID/Bar code reader would support the EAN.UCC Composite Symbology.

Figure 13 contains a GS1-128 Composite symbol with data structures:

- Linear component data structure: AI 01 + 14 digits
- Composite CC-A component: AI 21 + 11 digits + FNC1 + AI 9999 +14 digits



Figure 13 — Composite symbol with GS1 linear component containing the AI 01data structure

Note: The Composite CC-A component contains the AI 21 and supplemental backup AI 9999 data structures

RSS-14 may also be used as the linear component with EAN.UCC Composite CCA component, as shown in Figure 14. The data structures are identical to those of Figure 13, however RSS-14 is more compact.



Figure 14 — Composite symbol with RSS14 linear component containing the AI 01data structure

Note: The Composite CC-A component contains the AI 21 and supplemental backup AI 9999 data structures

15.2 Other ISO/IEC 2D symbologies

PDF417, MicroPDF417 and QR Code, as described in ISO/IEC 18004, are all used in the supply chain, and can support transponder backup, using either ISO/IEC 15418 Application Identifiers or Data Identifiers and hexadecimal or octal encoding (but all three of these symbologies will be more space-efficient if encoding octal digits).

15.3 The Military Shipping Label

When a high-capacity, 2D error-correcting bar code is already present, such PDF417 as on the Military Shipping Label, an additional hexadecimal or octal field with an appropriate Data Identifier (see 11.1.3) may be added to this bar code to carry the transponder backup data.

© ISO/IEC 2008 – All rights reserved
Copyright International Organization for Standardization
Provided by IHS under license with ISO
No reproduction or networking permitted without license from IHS
Not for Resale

Annex A
(informative)

Design terms for passive RFID transponders inlays or labels

Figures A.1 and A.2 show commonly used configurations of 1-up die cut pressure-sensitive roll and fanfold passive RFID transponders inlays or labels. In both figures, the finished dimensions of the die cut label is W in width and L in length. The backing, or release liner is assumed to be S in width, with equal edge margin on each side. The inter-label gap, G, together with the label length, L form a label repeat distance R = L + G. Die strikes should not be more than 90% of (2L + 2W)

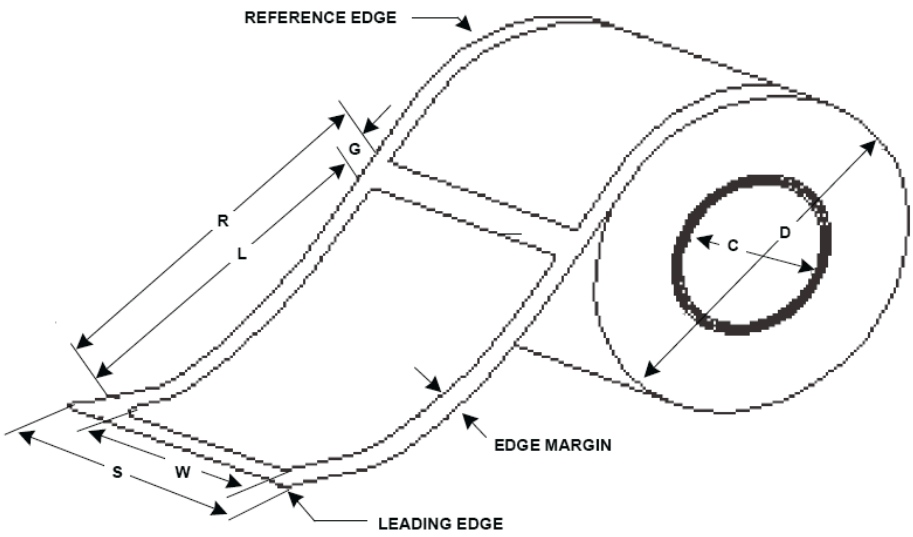

Figure A.1 – Label roll dimensions

Roll labels are presumed to be wound on a core of inner diameter C and the finished outer roll diameter is assumed to be D.

Fanfold (or Z-fold) labels are shown in Figure A.2. The dimensions W, L, S, G and R have the same meaning as in the roll configuration in Figure A.1. Note that a perforation is assumed in the centre of the inter-label gap, to enable folding. Fanfold labels are finished into packs of dimension S wide by E long by F high. Note that the pack length E must be an exact multiple of the repeat distance, R.

In both Figures A.1 and A.2, the Leading Edge of the roll or pack is identified. It is assumed to be the release liner edge approximately G/2 long preceding the first label edge. This is because the tear-off bar (see Figure A.3) normally forms the reference line of position in the printer-encoder.

In Figure A.3, the label detail is shown with the die-cut label positioned at rest in a typical printer-encoder. The important consideration here is that the transponder location be correctly matched to the encoding antenna position in the intended printer-encoder.

The transponder's transverse dimension is defined as "A" and its longitudinal dimension is "B". The internal placement of the transponder inlay or antenna edge is measured as distance "X" from the Reference Edge, and "Y" from the Leading Edge, which is assumed to be coincident with the printer-encoder's tear-off bar, when the label is at the rest position prior to encoding and printing.

© ISO/IEC 2008 – All rights reserved

Copyright International Organization for Standardization
Provided by IHS under license with ISO
No reproduction or networking permitted without license from IHS
Not for Resale

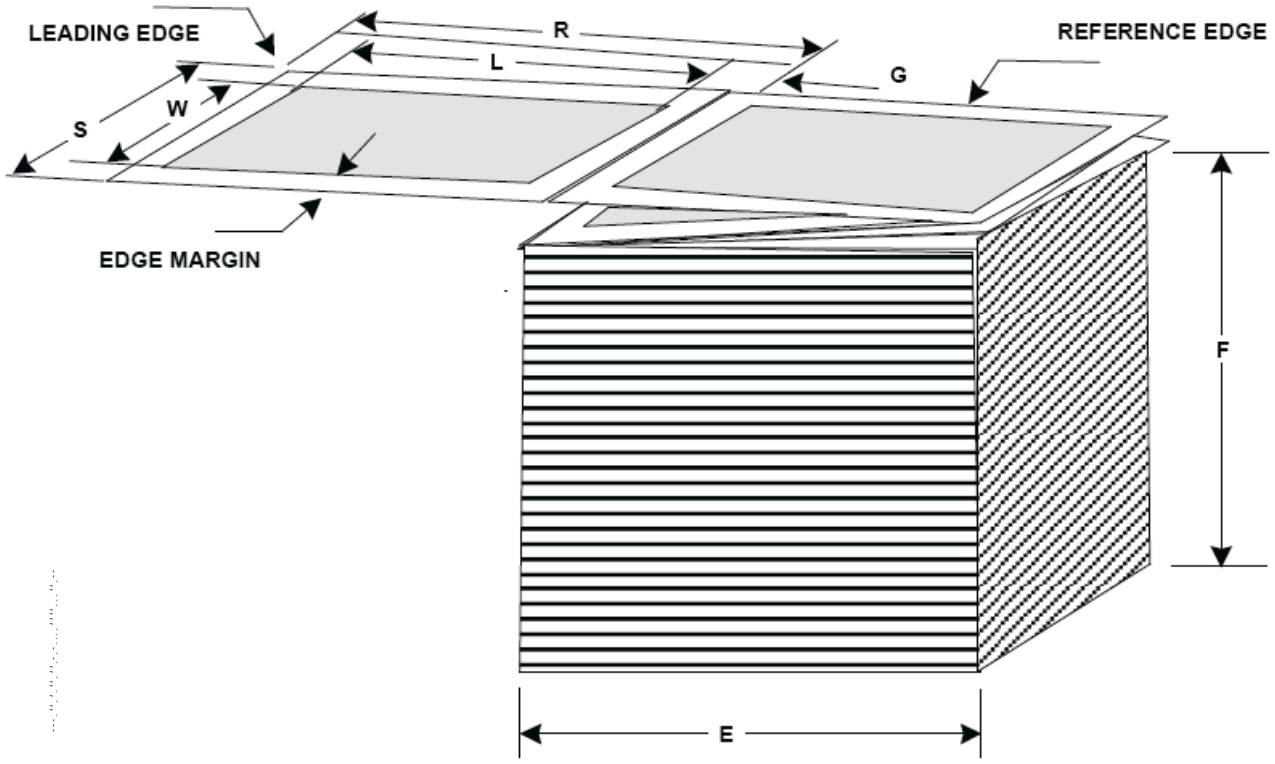

Figure A.2 – Label fanfold pack roll dimensions

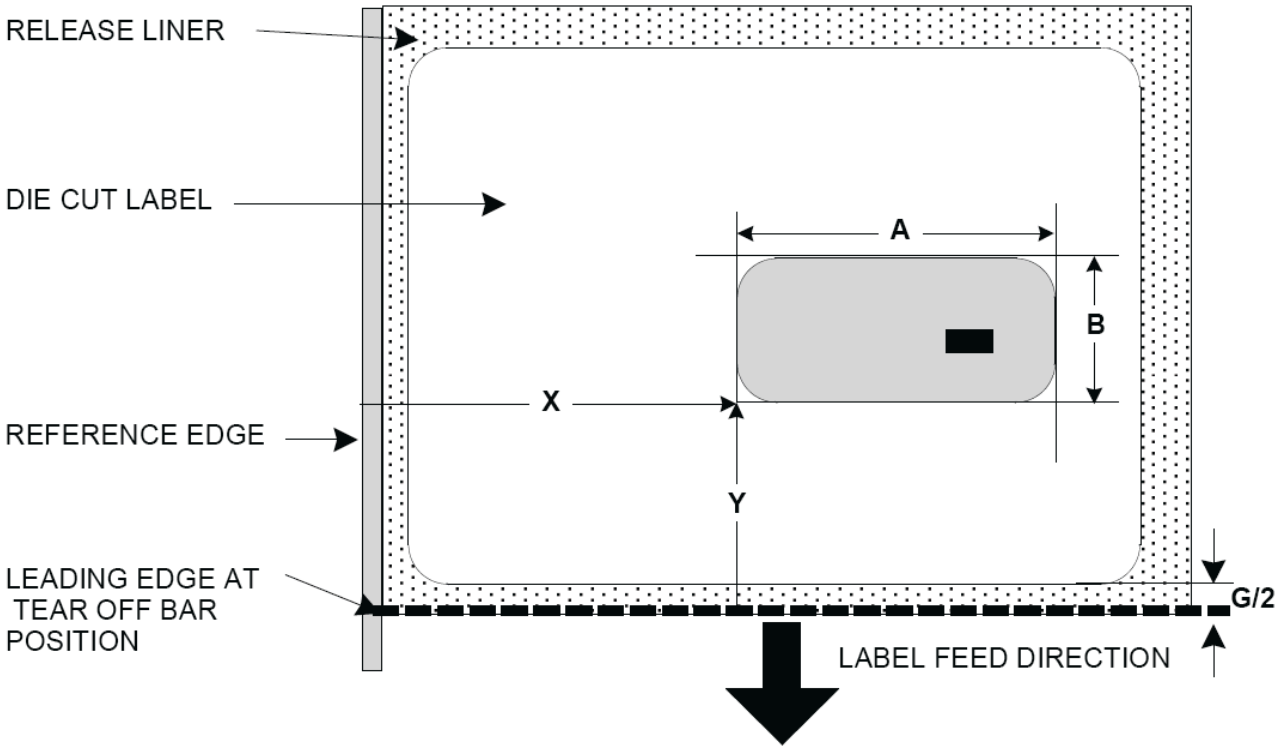

Figure A.3 – Passive RFID transponders label internal layout as shown in a typical printer-encoder

© ISO/IEC 2008 – All rights reserved
Copyright International Organization for Standardization
Provided by IHS under license with ISO
No reproduction or networking permitted without license from IHS
Not for Resale

Annex B
(informative)
AIM RFID Emblem for passive RFID transponders

The Association for Automatic Identification and Mobility (AIM Global) has developed the AIM Global SAG-0501, v2.03, a public-domain system of printed visual identification for passive RFID transponders to indicate the presence of an embedded RFID transponder. This AIM RFID Emblem consists of a unique, public domain logo with a two-character code (shown as "B3" in the illustrations below) to indicate the frequency range and data structure conformance standard and in certain cases, the data structure type contained within the encoded RFID transponder.

The two forms of the AIM RFID Emblem are:

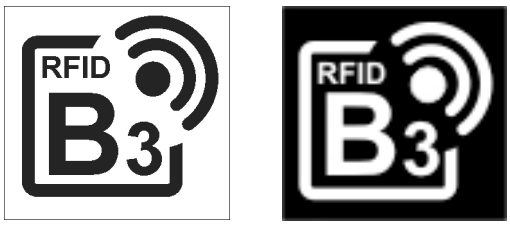

Figure B.1 – RFID Emblem

Either form may be used; it is recommended to use the form which most visually striking on the printed passive RFID transponders material. The logo should be printed no smaller then 13 mm square, in any colour. There shall be a minimum 3 mm clear, unprinted area around the mark.

The two-character codes to be used with the approved data structures for Department of Defense applications in the AIM RFID Emblem on with UHF passive RFID transponders are shown in Table B.1.

Please refer to the AIM Global website (http://www.aimglobal.org/standards/rfidemblem/default.asp) for the complete list of current assignments and downloadable graphics files of the AIM RFID Emblems defined in Table B.1. The actual graphics are shown in Figure B.1. Codes not currently assigned are reserved for future use.

As an additional visual aid for workers, two character codes with an asterisk are intended to identify RFID hardware (readers and printer/encoders) compatible with the relevant standard (e.g., E* identifies equipment compatible with EPCglobal standards; M* or B* with these MSL labelling guidelines).

--`,,```,,,,````-`-`,,`,,`,`,,`---
© ISO/IEC 2008 – All rights reserved
Copyright International Organization for Standardization
Provided by IHS under license with ISO
No reproduction or networking permitted without license from IHS
Not for Resale

Table B.1 – Coding of the AIM RFID Emblem when used with passive RFID transponders

2-Character Printed Code	Transponder Frequency†	Air Interface Protocol	Data Structure Defining Agency	Data Structure
A*	433 MHz	ISO 18000-7	ISO JWG	Indicates compatible readers/encoders
A0	*433 MHz*	*ISO 18000-7*	*(RFU)*	*Reserved for future use*
A1	433 MHz	ISO 18000-7	ISO 17363	License plate ID plus optional application data
A2	*433 MHz*	*ISO 18000-7*	*(RFU)*	*Reserved for future use*
A3	*433 MHz*	*ISO 18000-7*	*(RFU)*	*Reserved for future use*
B*	860-960 MHz	ISO 18000-6 C	ISO JWG	Indicates compatible readers/encoders
B0	*860-960 MHz*	*ISO 18000-6 C*	*(RFU)*	*Reserved for future use*
B1	860-960 MHz	ISO 18000-6 C	ISO 17364	License plate ID plus optional application data
B2	*860-960 MHz*	*ISO 18000-6 C*	*(RFU)*	*Reserved for future use*
B3	860-960 MHz	ISO 18000-6 C	ISO 17365	License plate ID plus optional application data
B4	*860-960 MHz*	*ISO 18000-6 C*	*(RFU)*	*Reserved for future use*
B5	860-960 MHz	ISO 18000-6 C	ISO 17366	License plate ID plus optional application data
B6	*860-960 MHz*	*ISO 18000-6 C*	*(RFU)*	*Reserved for future use*
B7	860-960 MHz	ISO 18000-6 C	ISO 17367	License plate ID plus optional application data
B8	860-960 MHz	ISO 18000-6 C	ISO 10891	Freight containers, license plate ID only
B9	*860-960 MHz*	*ISO 18000-6 C*	*(RFU)*	*Reserved for future use*
E*	860-960 MHz	ISO 18000-6 C	EPCglobal #	Indicates compatible readers/encoders
E0	860-960 MHz	ISO 18000-6 C	EPCglobal #	GID General Identifier
E1	860-960 MHz	ISO 18000-6 C	EPCglobal #	SGTIN Serialized GTIN
E2	860-960 MHz	ISO 18000-6 C	EPCglobal #	SSCC Serial Shipping Container Code
E3	860-960 MHz	ISO 18000-6 C	EPCglobal #	SGLN Serialized Global Location Number
E4	860-960 MHz	ISO 18000-6 C	EPCglobal #	GRAI Global Returnable Asset Identifier
E5	860-960 MHz	ISO 18000-6 C	EPCglobal #	GIAI Global Individual Asset Identifier
H*	13.56 MHz	18000-3 M3	ISO JWG	Indicates compatible readers/encoders
H0	13.56 MHz	18000-3 M3	ISO 17364	License plate ID plus optional application data
H1	13.56 MHz	18000-3 M3	ISO 17365	License plate ID plus optional application data
H2	13.56 MHz	18000-3 M3	ISO 17366	License plate ID plus optional application data
H3	13.56 MHz	18000-3 M3	ISO 17367	License plate ID plus optional application data
L*	125/134,4 kHz	ISO 18000-2	ISO JWG	Indicates compatible readers/encoders
L0	125/134,4 kHz	ISO 18000-2	ISO 17364	License plate identification only
L1	*125/134,4 kHz*	*ISO 18000-2*	*(RFU)*	*Reserved for future use*
L2	125/134,4 kHz	ISO 18000-2	ISO 17367	License plate identification only
L3	*125/134,4 kHz*	*ISO 18000-2*	*(RFU)*	*Reserved for future use*
M*	860-960 MHz	ISO 18000-6 C	US DoD	Indicates compatible readers/encoders
M0	*860-960 MHz*	*ISO 18000-6 C*	*(RFU)*	*Reserved for future use*
M1	860-960 MHz	ISO 18000-6 C	US DoD	CAGE plus serial number
M2	*860-960 MHz*	*ISO 18000-6 C*	*(RFU)*	*Reserved for future use*
N*	13.56 MHz	ISO 14443-2,3,4	ISO 7816-5	Indicates compatible readers/encoders
N0	13.56 MHz	ISO 14443-2,3,4	--	Application Specific

† Meeting local UHF regulations

See EPC™ Tag Data Standards

Copyright International Organization for Standardization
Provided by IHS under license with ISO
No reproduction or networking permitted without license from IHS
Not for Resale
© ISO/IEC 2008 – All rights reserved

Annex C
(informative)

Optimizing passive RFID transponders placement

While the visual inspection methods described in Clause 7.2 may be used to guide passive RFID transponders placement, a more quantitative method is useful in both confirming results and in determining the best transponder selection, polarization and placement on the transport unit in terms of reader performance. Use of this method will help ensure that the passive RFID transponder on the transport unit or pallet unit load will meet the minimum read range requirements.

It should be noted that several commercial vendors produce testing software specifically designed to optimize tag type and location selection. These programs employ a scientific methodology that can report in a statistically significant manner the expected performance of various transponders at various locations on an object. It is also important to understand performance at the various frequencies and power levels and duty cycle utilized in international commerce.

The laboratory method described here requires a minimum of equipment and gives relative (*not absolute*) measurements of read range performance (*not conformance*) that may be easily compared between transponders and transport units made in the same test lab. By testing the same transponders and transport units in multiple laboratories, meaningful correlations of test results between labs may be made.

For standardized performance measurement, the methods of ISO 18046 should be followed. Conformance measurement should be performed utilizing the methods of ISO 18047-6.

C.1 Equipment

C.1.1 An indoor or outdoor facility of sufficient size that there are no large metal objects or vehicles within 10 m of the front or side of the test antenna

- An outdoor parking lot works well as a temporary facility
- If indoor, the ceilings should be as high as possible, and the floor should be non-metallic. (Ideally, use an anechoic chamber)

C.1.2 A UHF RFID reader of the appropriate frequency designed for fixed-mount applications, together with a fixed-mount UHF RFID antenna having circular or crossed polarization

- Both the reader and antenna should be types approved for use on conveyors in Defense Logistics Agency depots, and compliant with the appropriate radio regulations
- The reader must have either programmable or manually step-adjustable output power
- Both the reader and antenna should have a single antenna connector
- Readers having integral antennas may be used

C.1.3 A computer with appropriate reader driver software is connected to the reader. If the computer has an internal wireless LAN link, it should be disabled

C.1.4 A movable antenna mounting stand (preferably non metallic) having the ability to adjust antenna height over the range 0,6 to 2 m, as well as its pointing direction

--`,,```,,,,````-`-`,,`,,`,`,,`---

© ISO/IEC 2008 – All rights reserved
Copyright International Organization for Standardization
Provided by IHS under license with ISO
No reproduction or networking permitted without license from IHS
Not for Resale

C.1.5 A plastic or wooden table on which to set the transport unit under test. Nominal top surface height is 75 to 90 cm. It must be strong enough to support the heaviest transport unit (24,6 kg). A moulded plastic or structural foam patio table is a good choice. Preferably, replace any metal fasteners with Nylon® fasteners

C.1.6 Computer and RF coaxial cabling are used as required. See notes in Clause C.3.1

C.2 Facilities Set up

Ideal test environments are specified in Annex A of ISO 18046. While such facilities are necessary for accurate absolute measurements, the simplified method described is much less costly and adequate for the purpose of guiding transponder selection and placement.

The antenna stand should first be set up in a location at least 10 m from any wall or metal object as in Figure C1. This is not always possible; as an alternative just try to place the antenna so that it is as far as possible from metal objects in front of it.

Note: Mounting anechoic foam tiles or cones on plywood panels and setting them on three sides surrounding the test table can obtain additional RF isolation. Conductive black carbon-loaded foam may also help, especially when used in one or more layers with a total thickness ≥ 10 mm.

The antenna (shown as a black box in Figure C.1) should be mounted on the stand to permit height adjustment over the full range. If cross-polarized rather than circularly polarized, set the two polarizations along the vertical and horizontal axes. Ensure that the antenna and stand are well grounded.

The transport unit as set on testing table (see C.1.6) is shown as cross-hatched in Figure C.1. It should be set up approximately 3 m directly in front of the antenna. All other equipment should be located on a standard table or bench set at least 2 m behind the antenna. Avoid running any cables into the area between the antenna and transport unit-testing table.

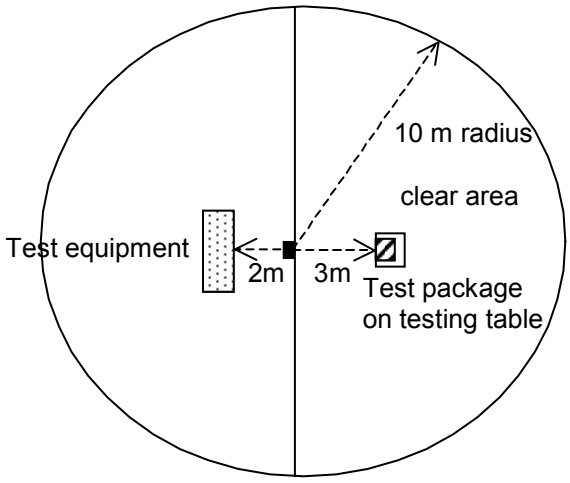

Figure C.1 – Nominal transport unit test facilities layout

Ensure that there are no active RFID readers within 30 m of the test transport unit *in any direction* even if there are intervening walls, ceilings or floors. As a general practice, cellular telephones, cordless telephones, cordless earphones or speakers, Bluetooth-connected devices and IEEE 802.11 wireless LANs should not be used within that same 30 radius. This is because certain transponder antennas are resonant **at multiple frequencies, causing the chip to be activated by an external RF source rather than the test reader** and antenna, therefore resulting in false readings of activation power threshold for the transponder under test.

© ISO/IEC 2008 – All rights reserved
Copyright International Organization for Standardization
Provided by IHS under license with ISO
No reproduction or networking permitted without license from IHS
Not for Resale

C.3 Equipment setup

C.3.1 RF cabling considerations

The coaxial cable connecting to the antenna should be long enough to allow the antenna stand to be moved to within 1 m of the transport unit and over the full antenna height range. Connect the single antenna port on the detached antenna to the single antenna port on the reader. The same cable should always be used to eliminate measurement variation due to different cable attenuations.

Poor quality coaxial cables can induce erratic measurement errors that are not separable from poor transponder performance. To protect against these problems:

— Ensure that cable is of the proper impedance (generally 50 ohms) to match the RF devices and connectors used, and select larger-diameter, low attenuation cable

— Readers and antennas normally use 50-ohm type N, BNC or SMA connectors (low-cost 75-ohm type F home CATV wiring connectors should *not* be used). Gold plated connectors are recommended for reliability

— Connectors where the cable shield is attached by crimping rather than held by screw-in ferrules generally have better long-term connection reliability, especially under flexure

C.3.2 Reader setup

This set up requires supporting software to set the reader power level from the computer. This is normally available as support diagnostic software from the reader manufacturer.

If the reader manufacturer has not calibrated the power output against the programmed step values, it is recommended that it be done using an RF power meter of the appropriate frequency range and power handling capability. Calibration should be in decibels (in dBm or dBw) at each power level setting.

If the receiver section of the RFID reader has programmable or adjustable sensitivity, it should be set to the “default” or “normal” sensitivity.

C.4 Test methodology

This setup may be used for evaluating UHF transponder sensitivity in free air, or when mounted to inlays or labels on transport units.

What is fundamentally measured is the reader power margin in decibels above the transponder power-up threshold to ensure consistently reliable reading at a fixed distance. The threshold is the reader power level at which the tag can no longer be read reliably, either because there is not enough power output to the antenna to activate the chip or because the backscatter signal is too weak to be detected by the receiver in the RFID reader.

C.4.1 Taking threshold power measurements

There is not always a sharp reading threshold. The best reader software will attempt a certain number of reads, or reads per second, and measure either the % of good reads or the % of failures. Less useful software may only show good reads; but the rate of good reads can be estimated visually by watching the screen. A good threshold to use is the reader power setting (or reader power attenuation value) at the 50% good read rate point. The key to good measurement practice is consistent application of technique.

While it would appear logical to start at the maximum power and monitor the percent good reads as the power is slowly incrementally reduced, this can lead to inaccurate threshold measurements due to hysteresis effects in the chip power circuitry. More accurate measurements are obtained by tuning off the reader power between trial setups. Then starting at the lowest reader power, increase the reader power until the threshold power

Copyright International Organization for Standardization 8 – All rights reserved
Provided by IHS under license with ISO
No reproduction or networking permitted without license from IHS Not for Resale

value is found for an approximately 50% good read rate. Record that value, in decibels. In a given test the best comparative result is the lowest reader threshold power level realized.

C.5 Passive RFID transponder evaluation

C.5.1 General

Most transponder specifications are quoted in terms of free-air performance. These values are not always useful in practice, as the transponder is nearly always part of an inlay or is mounted on some type of material or object that has RF absorption, reflection or scattering properties. This test setup will enable measurement of the transponder under more realistic circumstances.

C.5.2 Measurement setup

An empty corrugated case makes a good test fixture. Place the case at the edge of the testing table with the side where the passive RFID transponder will be applied facing the antenna.

It is recommended that the passive RFID transponders samples be attached to very thin Mylar® or polyester, or PET sheets with a clear size border of at least 50 mm for ease in taping to transport packaging during placement tests.

Using one or more 50 mm pieces of vinyl electrical tape (for ease of clean removal from the transport unit), lightly tape the test sample by its border to the centre of the case face. Adjust the height and orientation of the antenna to point at the centre of the test sample at the centre of the target area.

If the transponder cannot be initially activated at the highest programmed reader power setting, then move the antenna closer to the transponder, initially to 2 m then 1 m if necessary.

To ensure adequate dynamic range for practical measurements, ideally find a distance at which the transponder activates at no more than 25% of maximum reader power (i.e., at least –6 dB below maximum power).

Record the exact distance between the antenna face and the transponder centre. Set this power level as the 0 dB reference power level for subsequent measurements.

C.5.3 Evaluating transponder lot quality

When possible, obtain transponders with performance data specified the manufacturer based on tests conducted according to the methods of ISO/IEC 18046 for reference purposes.

Test a representative group in an identical manner, recording the “free air” threshold power value taken as described in Clause C.4.1 above. For reference purposes, it is suggested that three types of representative samples be marked and kept: Least sensitive, average sensitivity, and most sensitive.

The least sensitive transponder samples are especially useful for use in transport unit evaluation (see Clause C.6), as they represent the “worst case” of transponder performance on the transport unit.

C.5.4 Evaluation effects of transponder orientation

Some transponder antenna designs are much more orientation sensitive than others. Rotating the transponder through one or more axes and measuring the threshold power values at known angles can evaluate this property.

© ISO/IEC 2008 – All rights reserved
Copyright International Organization for Standardization
Provided by IHS under license with ISO
No reproduction or networking permitted without license from IHS
Not for Resale

C.5.5 Influence of packaging materials

Transponder samples can be taped to or permanently mounted on different packaging materials to determine their detuning effects on transponder read distance by measuring changes in the threshold power value. Always use the same size material sample and centre the transponder on it.

Note that some transponder designs actually may perform better when mounted on certain packaging materials than in free air, as they were designed to use the packaging material as part of the antenna's tuning (see Clause 6.3).

C.5.6 Frequency influence

Passive RFID transponders on transport units shipped between continents may need to operate at multiple reader frequencies and differing power levels. By using readers and antennas compliant with differing local radio regulations to evaluate the same transponders, the acceptability of various transponders at different reading frequencies can be determined.

C.5.7 Combination testing

Any of the above tests can be combined in a logical matter to reduce the total number of tests performed.

C.6 Testing transport units

C.6.1. General

This setup may be used for quantitative best transponder selection, polarization and placement on the transport unit in terms of reader performance

C.6.2. Measurement setup

Place the test transport unit at the edge of the testing table with the side the passive RFID transponder will be applied to facing the antenna. Adjust the height and orientation of the antenna to point at the centre of the target area (see Figure 5 in Clause 7.1.1).

The test transponder should be selected from a known tested group of transponders (see Clause C.5.2 above), preferably the low-sensitivity group to ensure "worst-case" performance. It is recommended that the passive RFID transponders samples be adhered to very thin Mylar® or polyester, or PET sheets with a clear size border of at least 50 mm for ease in taping to transport unit during placement tests. Using one or more pieces about 50 mm of vinyl electrical tape for ease of removal, lightly tape the transponder sample by its border at the centre of the target area.

If the transponder cannot be initially read at the highest programmable reader power setting, then move the antenna closer to the transponder, initially to 2 m then 1 m if necessary. Note that if the transponder, when mounted on the transport unit, cannot be read at full power when the antenna is placed less than 1,5 meter from the transport unit in this test, then it is unlikely to meet the requirements of Clause 7.1.1 in practice.

To ensure adequate dynamic range for practical measurements, ideally find a distance at which the transponder activates at no more than 25% of maximum reader power (i.e., at least –6 dB below maximum power).

Record the exact distance between the antenna face and the transponder centre. Set this power level as the 0 dB reference power level for subsequent measurements.

C.6.3 Taking measurements

Follow the threshold power measurement technique described in Clause C.4.1 above.

Copyright International Organization for Standardization 8 – All rights reserved
Provided by IHS under license with ISO
No reproduction or networking permitted without license from IHS Not for Resale

C.6.4 Constructing a transponder placement map

Passive RFID transponders can be taped to at different positions in the target area (see Figure C.2) to determine the effects of RF absorption, scattering, reflection or other detuning effects of the transport unit contents on transponder read distance.

Step the position of the passive RFID transponders across the target area, and measure and record the threshold power value in decibels above or below the 0dB reference power level at each position, constructing a “placement map” of threshold power values. The label position with the minimum threshold power will give best reading performance.

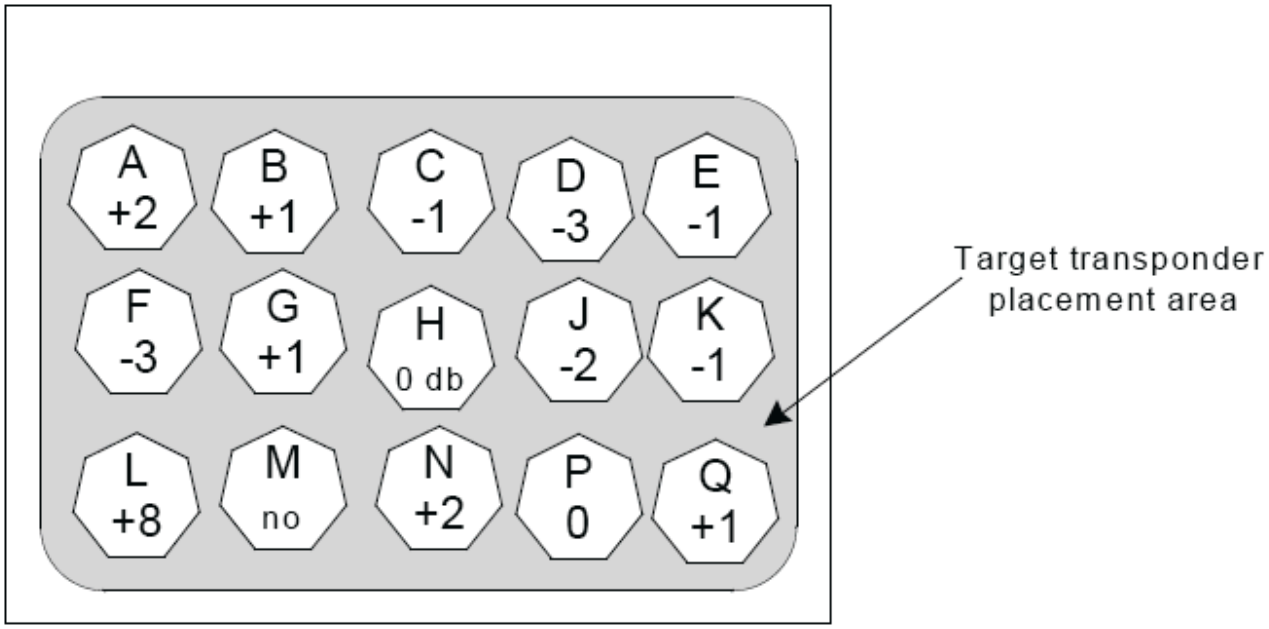

Figure C.2 – Example of a measured transponder placement map

Figure C.2 shows an example of a placement map for an arbitrary filled transport case. The 0 dB reference power level is set at point H in the approximate centre of the target placement area (see Clause 7.1.1 for target area definition).

Threshold power levels relative to the 0dB reference power are then measured with the passive RFID transponders taped at all other points A through Q. These show a range from –3dB at points D and F to +6dB at point L. Point M was a “no read”, the maximum reader power was not sufficient to read the transponder.

The best placement would be at point D, because it not only has the lowest threshold power level, but also because the points around it are also favourable, giving a better tolerance for actual passive RFID transponder placement than point F, which is surrounded by unfavourable values. Note that the threshold power value at point D would probably also be less affected by a shift in position of the contents within the case than at point F.

Multiple passive RFID transponders types can be compared in this manner. Note that some transponder designs actually perform better when mounted on certain transport units as they were designed to use the packaging material and/or contents as part of the transponders antenna’s resonant tuning. This often occurs with transponders designed for use on reflective materials or with placed on transport cases containing metal objects.

--`,,```,,,,````-`-`,,`,,`,`,,`---
© ISO/IEC 2008 – All rights reserved
Copyright International Organization for Standardization
Provided by IHS under license with ISO
No reproduction or networking permitted without license from IHS
Not for Resale

C.6.5 Evaluation effects of transponder polarization

Some transponder antenna designs are much more orientation sensitive than others. Many passive RFID transponders utilizing dipole antennas have the transponder placed with horizontal polarization. Rotating the passive RFID transponder and measuring the threshold power values at known angles evaluates this property.

Passive RFID transponders with vertically polarized dipole antennas may be useful when the transport unit contains cans, bottles, or other vertically oriented cylindrical objects. Experiment with placement of the passive RFID transponders over the cylinder tangent and over the gap between cylinders and measure threshold power level.

C.6.6 Frequency influence

Passive RFID transponders on transport units shipped between continents may need to operate at multiple reader frequencies and differing power levels. By using readers compliant with differing local radio regulations to evaluate the different types of transponders in RFID applications on transport units, the acceptability of various transponders at multiple reading frequencies can be determined.

Note that the optimum position of a single type of passive RFID transponders on the transport unit may vary with frequency. A compromise location can be determined from comparison of the placement maps.

C.6.7 Combination testing

Any of the above tests can be combined in a logical matter to reduce the total number of tests performed.

C.7 Three-dimensional transport unit testing

An obvious variation of this test is to evaluate the passive RFID transponders on transport units in three dimensions, by moving the reader around the transport unit while keeping it a constant distance from the centre of the transponder once placed using the methods in Clause C.6.3. The reader position vector is recorded, and the threshold reader power is then measured using the methods of C.4.1. In this manner, a 3-D map of transponder sensitivity can be plotted, where the transponder sensitivity vector length is defined as:

Transponder sensitivity (dB) = Maximum Power (dB) – Threshold power (dB)

Note that the transponder sensitivity is a relative value, always positive*, that effectively measures the reader power margin over transponder activation threshold* in each vector direction for a reader that is operating at maximum power and a constant distance from the transponder.

Figure C/3 shows two transport units, SKU A and SKU B, containing the different types of objects but using the same type of transponder. As evaluated in three dimensions, the transponder sensitivity range pattern around each object is shown. Its shape is determined by the make up of the objects in the transport units and the passive RFID transponder placement.

The transport unit on the left, SKU A, has a complicated, non-uniform pattern of threshold read range, with strong sensitivity lobes in certain directions, and sensitivity nulls in other directions. While on conveyor, it would require precise reader orientation of the reader and case for the highest probability of a good read. The fact that the threshold distance has nulls on the side of the case reduces its probability of a good read as the case is moved at high speed (in the direction of the arrow) along a conveyor.

The transport unit on the right, SKU B, has a highly predictable and uniform read range around the top and sides of the case. It would be easy to read from almost any position above or from the side of the case. Since the threshold sensitivity changes slowly as the case in moved along the conveyor, a reader will have the longest continuous time to read the transponder, and thus the best probability of a good read as the case is moved at high speed along the conveyor.

--`,,```,,,,````-`-`,,`,,`,`,,`---

Copyright International Organization for Standardization 8 – All rights reserved
Provided by IHS under license with ISO
No reproduction or networking permitted without license from IHS Not for Resale

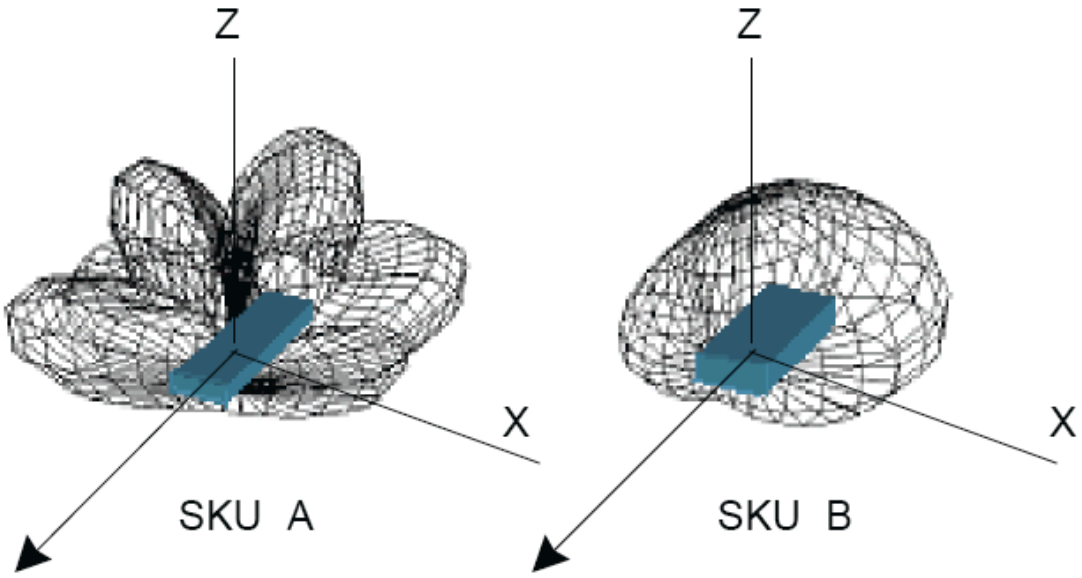

Figure C.3 – Three-dimensional transponder sensitivity for two different objects

Different transponder antenna designs will show widely varying sensitivity patterns on the same object. Figure C.3 could also represent two cases containing the same object, where a high-Q or highly directional transponder antenna on SKU A is highly influenced by the case contents, but a more omni-directional and content-insensitive transponder on SKU B is less affected by the case contents. Here again, SKU B has the preferable transponder sensitivity map.

--`,,```,,,,````-`-`,,`,,`,`,,`---

© ISO/IEC 2008 – All rights reserved
Copyright International Organization for Standardization
Provided by IHS under license with ISO
No reproduction or networking permitted without license from IHS
Not for Resale

Annex D
(informative)

UHF Gen 2 tag data memory map

The memory in UHF Gen 2 transponders is organized into 4 banks, as shown in Figure D.1. UII memory is required, but its size is vendor-defined. The minimum size is 32 bits, to contain a 16-bit CRC and 16-bit PC word. UII memory may be larger than 32 bits, to contain an UII whose vendor-specified length may be 16 bits to 496 bits in 16-bit increments. In addition, UHF Gen 2 transponders support an unspecified amount of User memory.

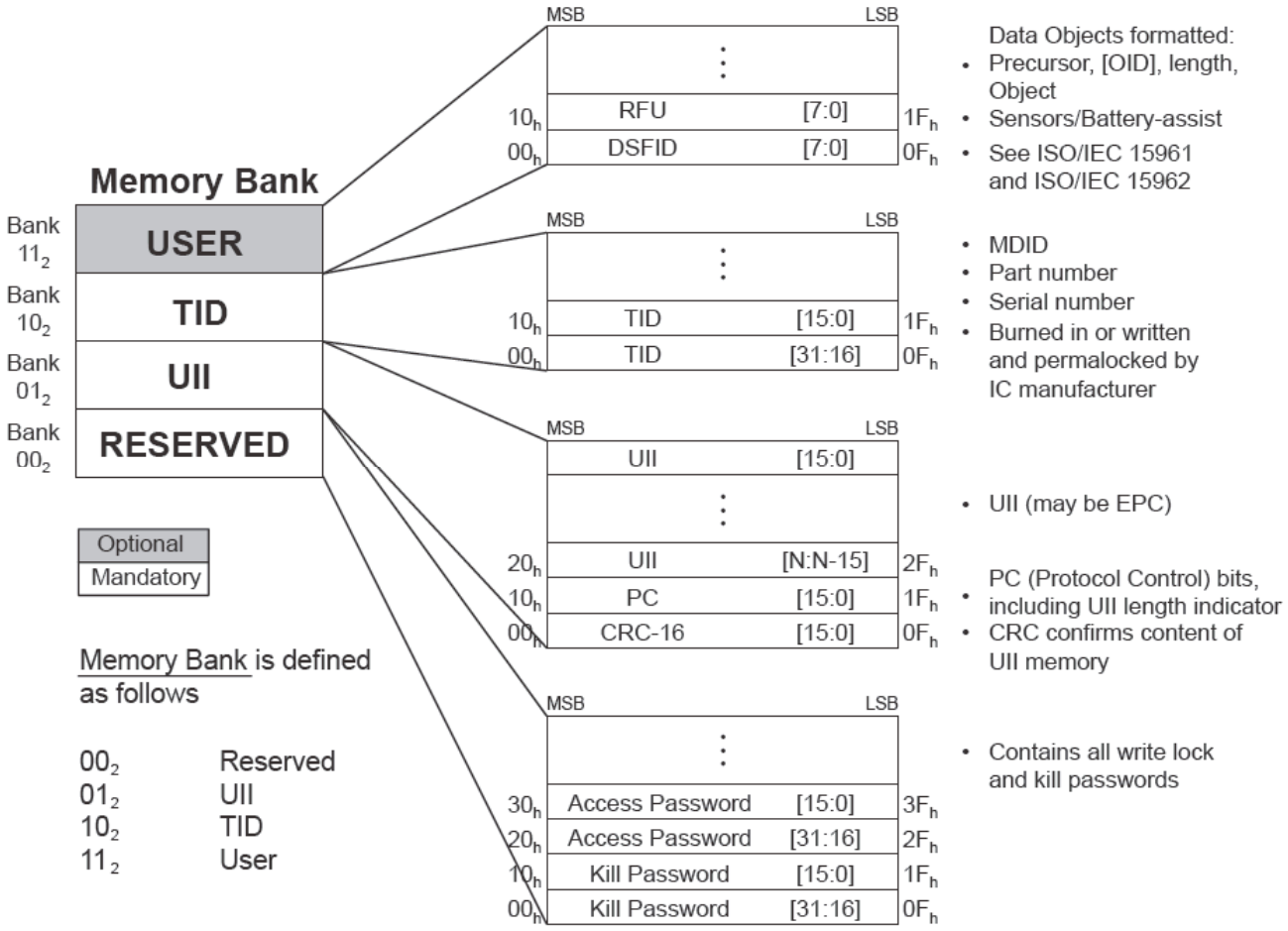

Figure D.1 — Logical memory map of a UHF Gen 2 transponder

The 16-bit PC (protocol control) word in Memory Bank 01 for a UHF Gen 2 transponder is structured as follows:

Copyright International Organization for Standardization 8 – All rights reserved
Provided by IHS under license with ISO
No reproduction or networking permitted without license from IHS
Not for Resale

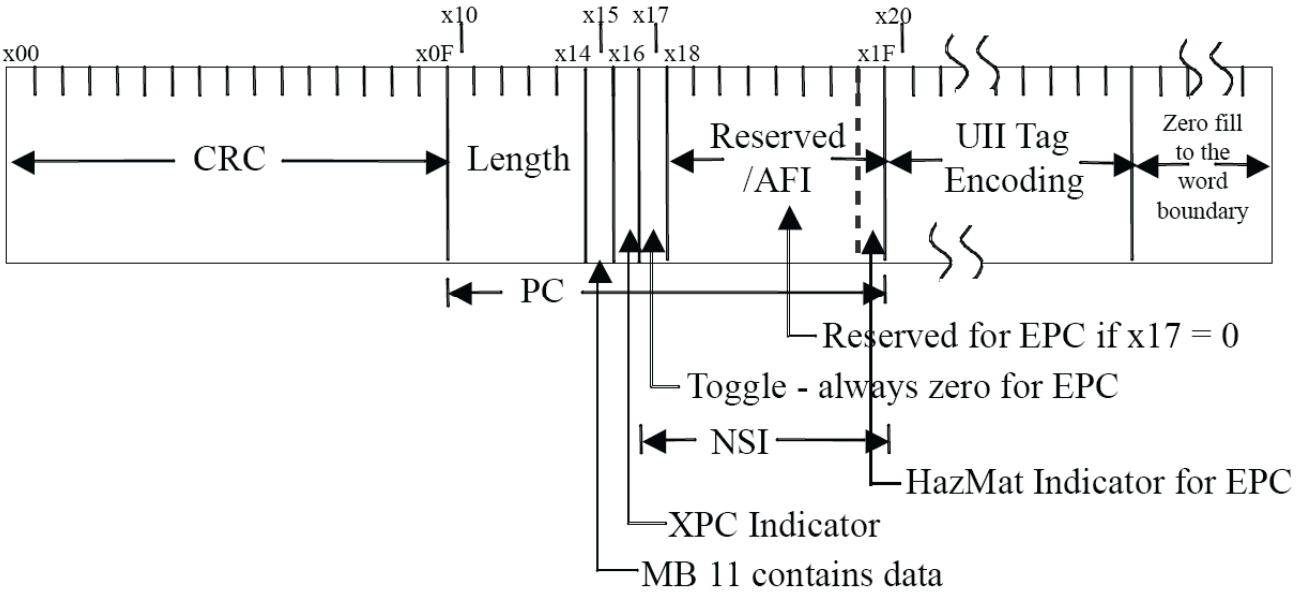

Figure D.2 – EPC Gen2 Memory Bank "01"

The length of the actual UII stored in the UII memory bank is programmable. Bits 10-14h determine the range of memory over which the UII is defined (in units of 16-bit words) and thus the range of data checked by the CRC-16 that is stored in bits 00-1Fh of the UII memory bank. The UII memory organization is "little endian," in that the most significant data bit of each 16-bit memory word corresponds to the least significant memory address bit.

In backing up the UII memory of a UHF Gen 2 transponder, both the CRC-16 and PC word shall be included as a prefix to the UII data structure to permit its proper interpretation.

© ISO/IEC 2008 – All rights reserved
Copyright International Organization for Standardization
Provided by IHS under license with ISO
No reproduction or networking permitted without license from IHS
Not for Resale

Annex E
(informative)

ISO/IEC 18000-6c tags, ASCII, and AFIs

In addition to supporting the EPCglobal tag data structures, the future ISO/IEC 18000-6c standard allows for ISO/IEC 15961-based tag data structures using AFIs (Application Family Identifiers) in applications defined by agencies other than EPCglobal. One byte AFIs are assigned under ISO/IEC 15961 Annex B.

While definition of support for AFI applications is outside the scope of this document, it should be noted the general methods developed for bar code and HRI backup methods of Clause 11.2 and 14.2, respectively, for EPCglobal UHF Gen 2 tags also support ISO/IEC 18000-6c AFI-based applications directly.

PC bit 17h is set to 1 indicating an AFI application (see Annex D.2). Note that the AFI header is included in the upper 8 PC bits, 18h through 1Fh. When the bar code symbology used supports 8-bit ASCII and the data are encoded according to ISO/IEC 15961 and 15962 data storage format, the methods of Annex E.1.1 can be used. If the bar code symbology used does not support 8-bit ASCII, an optional method is provided in Annex E.1.2.

E.1 Bar code backup data structure for AFI applications

E.1.1 Bar codes supporting 8-bit ASCII data

When bar code symbologies supporting the full 8-bit ASCII character set are used, AFI applications encoded according to ISO/IEC 15961 and 15962 structures may be formatted as shown in Clause 11.2.1.

E.1.2 Bar codes not supporting 8-bit ASCIII data

When bar code symbologies are used that do not support the full 8-bit ASCII character set, the AFI data structures may be formatted as a contiguous binary data string shown in Table E.1. The same AI and/or DI and Flag Character values (‘2’ and ‘B’, for Octal and Hex representations, respectively) may be used to support EPCglobal Gen 2 transponders employed for AFI applications. **ISO 17363, 17364, 17365, 17366, and 17367 recommend that the bar code and human-readable character strings for AFI-based data be the alphanumeric characters within the application and that the data not be converted to binary, octal, or hexadecimal strings.**

These flag values also indicate Gen 2 binary encodation, where the applications data In UII memory staring at 20h is a formatted as a single binary field. The length of the binary field in bits is 16 times the binary value contained in PC bits 10-14h (see Annex D). Other encoding details appear in Clause 11.1.

--`,,```,,,,````-`-`,,`,,`,`,,`---

Copyright International Organization for Standardization 8 – All rights reserved
Provided by IHS under license with ISO
No reproduction or networking permitted without license from IHS Not for Resale

Table E.1 – AFI-based bar code backup using binary data encoding

AI or DI	Flag* = '2'	Octal repr.** of CRC-16	Octal representation of the 16 PC bits (including the AFI byte)	Octal representation of the variable-length applications data encoded as a binary string	GS

AI or DI	Flag* = 'B'	Hex repr.** of CRC-16	Hex representation of the 16 PC bits (including the AFI byte)	Hex representation of the variable-length applications data encoded as a binary string	GS

* One or more leading zero digits may be present if required for compacted numeric encoding.

** Note: In bar codes using one or more fields each with AIs or DIs, the data string is terminated either by the end of symbol or a GS (Group Separator, ASCII value 29) control character, adding 1 symbol character.

E.2 HRI backup data structure for AFI applications

As is the case throughout these Guidelines, the bar code data structures used as backup in AFI applications may also be represented in human-readable form using the guidelines in Section 12.2. The HRI should be the data encoded and represented in the same format as in the bar code symbol itself.

--`,,```,,,,````-`-`,,`,,`,`,,`---
Copyright International Organization for Standardization
Provided by IHS under license with ISO
No reproduction or networking permitted without license from IHS
Not for Resale
© ISO/IEC 2008 – All rights reserved

Annex F
(informative)

Recovering the UII from pre-existing bar codes

F.1 Background

In a number of RFID applications, pre-existing barcodes on an RFID-enabled label will encode at least some of the component information corresponding to the RFID tag's Unique Item Identifier (UII). For example, consider an EPCglobal tag carrying an SGTIN as its UII. In this case, the "Company Prefix" and "Item Reference" components of the UII may be present in an Interleaved 2 of 5, RSS, EAN/UCC-128, UPC-A or EAN-13 symbol. The "Serial Number" component of the SGTIN may also be present, encoded in an EAN/UCC-128 symbol. Alternatively, all of these components may be encoded within a PDF417, Data Matrix, or other two-dimensional symbol on the label.

In some applications, all of the UII components will be available in bar coded form. In other applications, the format of the tag's UII requires additional information that is not typically available in pre-existing symbols. However, in some applications it may be possible to obtain the additional information through other means, such as a database search.

If all of the UII components are available through the above means, then a suitably programmed reader can reconstruct the tag's UII, even though no RFID backup bar code (as defined in the body of this document) is present on the label. The remainder of this Annex provides guidance for this approach.

F.2 Guidance on UII reconstruction

F.2.1 Backup Initiation and bar code reading step

Once it has been established that the RFID tag on a specific item is unreadable and recovery of the RFID tag's data is required, then scan the bar codes present on the item or its label. If a full or supplemental RFID backup bar code is present, then the presence of this bar code informs the system that backup is possible using the bar code information on the item. Otherwise, the system determines whether the bar codes on the label(s) provide sufficient information.

As the bar codes on the item are scanned, the system software must parse the decoded data and determine which kind of UII is being assembled, and whether all of the required components have been scanned. For example, if the operator scans a UPC-A symbol, then the system can infer that the intended UII is an SGTIN, but reconstructing the SGTIN will not be possible unless the label also includes a serial number bar code. Note that if the operator were to scan an SSCC-18 symbol after the UPC-A, then the system would revise its inference, and construct an SSCC-96 UII instead of an SGTIN.

F.2.2 Auxiliary data acquisition step

Once the item's bar codes have been scanned, auxiliary information may still be required. For example, all UIIs based on EPCglobal data structures include a "Partition" field, indirectly indicating the number of digits in the Company Prefix component. The system, upon determining that one or more auxiliary data components are missing, needs to acquire the missing information through a database lookup. This database can be either locally or an on-line database such as that maintained by EPCglobal.

Copyright International Organization for Standardization 8 – All rights reserved
Provided by IHS under license with ISO
No reproduction or networking permitted without license from IHS Not for Resale

F.2.3 UII reconstruction step

Once the UII components have been acquired, the system will typically need to reformat the data so that it matches the UII that would have been output from a read of the tag.

F.3 Tag Regeneration considerations

For many applications, the reconstructed UII is sufficient for the needs of the business process. If it is further necessary to reconstruct the complete series of bits in the unreadable tag's UII memory bank, then the use of a dedicated full or supplemental RFID backup bar code is recommended.

Alternatively, it may be possible to construct a set of tag bits based only on pre-existing bar codes, called "partial backup" symbols in this document, with several caveats and restrictions. Using EPCglobal data structures as an example, these include:

- The Protocol Control (PC) bits will not be found in pre-existing bar codes. It is possible to construct a default set of PC bits, but these may not match what was actually encoded in the RFID tag.
- The precise header bits cannot be determined from the pre-existing bar codes alone. For example, an SGTIN can be inferred from scanning a UPC, or an EAN/UCC-128 beginning with "01", but this will not distinguish between an SGTIN-96 and an SGTIN-198.
- The tag's choice of Filter bits cannot be determined from the pre-existing bar codes alone, but for many applications, a default choice, based on the UII derived from the pre-existing bar codes, will suffice.

© ISO/IEC 2008 – All rights reserved
Copyright International Organization for Standardization
Provided by IHS under license with ISO
No reproduction or networking permitted without license from IHS
Not for Resale

Annex G
(informative)

Summary and Examples

Representative actual-size backup bar code symbols from Sections 12 and 13 are shown below encoding EPCglobal binary data structures to allow comparison. The GS1-128 symbols are printed using a height of 15% of the length.

G.1 Full backup bar codes

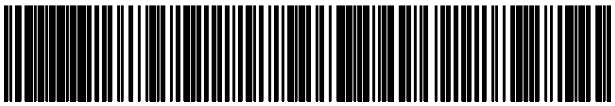

(9999) 0002 4041 5414 0000 1407 2045 3677 2142 2770 0000 4044 3004

Figure G.1 — UHF Gen 2 GS1-128 with CRC-16 and octal HRI



(9999) 0002 4041 5414 0000 1407 2045 3677 2142 2770 0000 4044 3004

Figure G.2 — UHF Gen 2 RSS Expanded bar code with CRC-16 and octal HRI



(9999) 0002 4041 5414 0000 1407 2045 3677 2142 2770 0000 4044 3004

Figure G.3 — UHF Gen 2 Data Matrix with CRC-16 and octal HRI

Copyright International Organization for Standardization 8 – All rights reserved
Provided by IHS under license with ISO
No reproduction or networking permitted without license from IHS
Not for Resale

G.2 Supplementary backup bar codes (used with GS1 serialized GTIN bar code)



(9999) 0078 2140 0001 4072 (01)10641410007346 (21) 8537604

Figure G-4 — UHF Gen 2 without CRC-16 using octal HRI in the supplemental (9999) symbol



(9999) 0078 2140 0001 4072 (9999) 0078 2140 0001 4072

Figure G-5 — Composite symbol with GS1 linear component (left) and RSS-14 (right, suitable for POS applications) containing the AI 01 data structur

Note: The Composite CC-A components contain the AI 21 and Gen 1 supplemental backup AI 9999 data structures.

G.3 Partial backup bar code



(01)10641410007346 (21) 8537604

Figure G-6 — Partial backup symbol (GS1-128 serialized GTIN barcode)

Note that with the caveats of Annex F.3, the serialized GTIN bar code (only) could be used as a backup bar code.

© ISO/IEC 2008 – All rights reserved
Copyright International Organization for Standardization
Provided by IHS under license with ISO
No reproduction or networking permitted without license from IHS
Not for Resale

Bibliography

[1] ISO/IEC 24729-2, *Information technology — Radio frequency identification for item management — Implementation guidelines – Part 2: Recycling and RFID tags*

[2] ISO/IEC 24729-3, *Information technology — Radio frequency identification for item management — Implementation guidelines – Part 3: Implementation and operation of UHF RFID Interrogator systems in logistics applications*

[3] An on-line method for the calculation of the CRC-16 from input data can be found at: http://www.lammertbies.nl/comm/info/crc-calculation.html

[4] AIM Global - REG-401: *Proposed Guidelines for the Use of RFID-Enabled Labels in Military Logistics: Recommendations for Revision of MIL-STD-129*

[5] EPCglobal Hardware Certification Mark– Information can be found at: http://www.epcglobalinc.org/certification/hw_cert/

Copyright International Organization for Standardization 8 – All rights reserved
Provided by IHS under license with ISO
No reproduction or networking permitted without license from IHS
Not for Resale

ICS 35.040

Price based on 61 pages

© ISO/IEC 2008 – All rights reserved
Copyright International Organization for Standardization
Provided by IHS under license with ISO
No reproduction or networking permitted without license from IHS
Not for Resale