TECHNICAL REPORT

ISO/IEC TR 24704

First edition
2004-07

Information technology – Customer premises cabling for wireless access points



Reference number
ISO/IEC TR 24704:2004(E)

Copyright International Organization for Standardization
Reproduced by IHS under license with ISO
No reproduction or networking permitted without license from IHS

Not for Resale

Copyright International Organization for Standardization
Reproduced by IHS under license with ISO
No reproduction or networking permitted without license from IHS
Not for Resale

TECHNICAL REPORT

ISO/IEC TR 24704

First edition
2004-07

Information technology – Customer premises cabling for wireless access points

© ISO/IEC 2004

All rights reserved. Unless otherwise specified, no part of this publication may be reproduced or utilized in any form or by any means, electronic or mechanical, including photocopying and microfilm, without permission in writing from the publisher.

ISO/IEC Copyright Office • Case postale 56 • CH-1211 Genève 20 • Switzerland



PRICE CODE F

For price, see current catalogue

Copyright International Organization for Standardization
Reproduced by IHS under license with ISO
No reproduction or networking permitted without license from IHS

Not for Resale

CONTENTS

FOREWORD....3
INTRODUCTION....4
1 Scope....5
2 Normative references....5
3 Definitions and abbreviations....5
3.1 Definitions....5
3.2 Abbreviations....7
4 Conformance....7
5 Configuration, structure and topology....8
5.1 General....8
5.2 Functional elements....8
5.3 Cabling subsystems....8
5.4 Topology....8
6 Media selection and performance....9
7 Telecommunications outlet coverage and location....9
7.1 General....9
7.2 Provisioning....9
7.3 Single user TO assembly....10
7.4 Multi-user TO assembly (MUTO)....10
7.5 Consolidation point....11
7.6 Dimensioning and configuring....11
8 Interfaces....13
9 Power delivery over balanced cabling....13
Annex A (informative) Supported applications....14
A.1 General....14
A.2 Cabling applications....14
A.3 Wireless applications....14
A.4 Power provisioning....14
Bibliography....15
Figure 1 – Grid of telecommunications outlets for wireless coverage areas....12
Figure 2 – Channel and Permanent link....13
Table A.1 – Supported wireless applications....14

Copyright International Organization for Standardization
Reproduced by IHS under license with ISO
No reproduction or networking permitted without license from IHS Not for Resale

INFORMATION TECHNOLOGY – CUSTOMER PREMISES CABLING FOR WIRELESS ACCESS POINTS

FOREWORD

1) ISO (International Organization for Standardization) and IEC (International Electrotechnical Commission) form the specialized system for worldwide standardization. National bodies that are members of ISO or IEC participate in the development of International Standards through technical committees established by the respective organization to deal with particular fields of technical activity. ISO and IEC technical committees collaborate in fields of mutual interest. Other international organizations, governmental and non-governmental, in liaison with ISO and IEC, also take part in the work.

2) In the field of information technology, ISO and IEC have established a joint technical committee, ISO/IEC JTC 1. Draft International Standards adopted by the joint technical committee are circulated to national bodies for voting. Publication as an International Standard requires approval by at least 75 % of the national bodies casting a vote.

3) Attention is drawn to the possibility that some of the elements of this Technical Report may be the subject of patent rights. ISO and IEC shall not be held responsible for identifying any or all such patent rights.

The main task of IEC and ISO technical committees is to prepare International Standards. In exceptional circumstances, a technical committee may propose the publication of a technical report of one of the following types:

- type 1, when the required support cannot be obtained for the publication of an International Standard, despite repeated efforts;
- type 2, when the subject is still under technical development or where, for any other reason, there is the future but not immediate possibility of an agreement on an International Standard;
- type 3, when the technical committee has collected data of a different kind from that which is normally published as an International Standard, for example 'state of the art'.

Technical reports of types 1 and 2 are subject to review within three years of publication to decide whether they can be transformed into International Standards. Technical reports of type 3 do not necessarily have to be reviewed until the data they provide are considered to be no longer valid or useful.

ISO/IEC TR 24704, which is a technical report of type 2, was prepared by subcommittee 25: Interconnection of information technology equipment, of ISO/IEC joint technical committee 1: Information technology.

This publication has been drafted in accordance with ISO/IEC directives, Part 2.

This document is issued in the type 2 technical report series of publications (according to 15.2.2 of the Procedures for the technical work of ISO/IEC JTC 1 (1998)) as a prospective standard for provisional application in the field of Customer Premises Cabling, because there is an urgent requirement for guidance on how standards in this field should be used.

This document is not to be regarded as an International Standard. It is proposed for provisional application so that information and experience of its use in practice may be gathered. Comments on the content of this document should be sent to IEC Central Office.

A review of this type 2 technical report will be carried out not later than three years after its publication with the option of extension for a further three years, conversion into an International Standard or withdrawal.

Copyright International Organization for Standardization
Reproduced by IHS under license with ISO
No reproduction or networking permitted without license from IHS Not for Resale

INTRODUCTION

This document specifies the use of generic cabling for customer premises, as specified in international standard ISO/IEC 11801, for connection to wireless access points. It is intended to guide new installations and renovations. The customer premises may encompass one or more buildings or may be within a building that contains more than one enterprise.

This Technical Report specifies an ISO/IEC compliant implementation methodology that enables connection to information and communications technology (ICT) equipment that is specifically deployed to provide a grid of wireless coverage areas within buildings. The cabling may be installed prior to the selection of specific equipment or the wireless application to be used.

International standard ISO/IEC 11801 specifies a structure and performance requirements for cabling subsystems that support a wide range of applications. It provides appropriate equipment interfaces to the cabling infrastructure in equipment rooms, telecommunications rooms and work areas.

A growing number of enterprises employ equipment at the “edge” of the network that rely on both physical connections to the cabling infrastructure at the work area, while also having the ability to maintain untethered network access at other locations. This Technical Report was created because the infrastructure specified in cabling standard ISO/IEC 11801 does not specifically cover infrastructure for connections to wireless access points. Supplementary information is provided here on the number of outlets and outlet placement for wireless access points that may optionally receive both power and information transfer through the IT cabling.

This Technical Report specifies a cabling system infrastructure based upon balanced and optical fibre cabling that provides:

- users with requirements for a supplemental cabling infrastructure that enables reliable deployment of wireless ICT equipment without the costs associated with the installation of additional IT or mains power cabling,
- users with a flexible cabling scheme such that changes to the wireless access points are both easy and economical;
- building professionals (for example, architects) with guidance for accommodating cabling before specific requirements are known, i.e. in the initial planning either for construction or refurbishment;
- industry and applications standardization bodies (for example ITU-T, ISO/IEC JTC 1/SC 6, ISO/IEC JTC 1/SC 25/WG 1, IEC TC 100) with a cabling system that supports current products and provides a basis for future product development;
- users, designers, and manufacturers of wireless access points with advice on interfacing to the generic cabling;
- suppliers of cabling components and installers of cabling with relevant requirements.

A number of wireless applications have been analysed to determine the requirements specified herein. Propagation of microwave energy indoors is complex and the operating range of communications devices will depend on carrier frequency, transmission power, building geometry and materials. Consult the application standard and equipment manuals for guidance on factors that should be taken into account during design of the wireless grid and prior to deployment of wireless access points.

--`,,`,,`-`-`,,`,,`,`,,`---

Copyright International Organization for Standardization
Reproduced by IHS under license with ISO
No reproduction or networking permitted without license from IHS Not for Resale

1 Scope

The cabling specified in this Technical Report is considered to be in addition to and not in place of the infrastructure specified in ISO/IEC 11801. This Technical Report specifies a customer premises cabling system infrastructure for an array of coverage areas that form a wireless network grid within a building. It is applicable to all of the balanced and optical fibre cabling classes specified in ISO/IEC 11801.

This Technical Report specifies design and configuration of an ISO/IEC 11801 compliant horizontal cabling subsystem. Requirements and guidelines are provided with respect to

a) minimum configuration, structure and topology,

b) performance requirements for permanent links and channels,

c) coverage and location of telecommunications outlets,

d) interfaces to wireless access points,

e) power delivery over balanced cabling.

While placement and security of wireless access points are outside the scope of this Technical Report, placement of telecommunications outlets (TOs) is specified to enable flexible deployment of wireless services.

Safety (electrical, fire, etc.) and electromagnetic compatibility (EMC) requirements are outside the scope of this Technical Report.

2 Normative references

The following referenced documents are indispensable for the application of this document. The latest edition of the referenced document (including any amendments) applies.

ISO/IEC 11801, *Information technology – Generic cabling for customer premises*

ISO/IEC 14763-1, *Information technology – Implementation and operation of customer premises cabling – Part 1: Administration*

ISO/IEC 18010, *Information technology – Pathways and spaces for customer premises cabling*

3 Definitions and abbreviations

3.1 Definitions

For the purposes of this document, the terms and definitions given in ISO/IEC 11801, ISO/IEC 18010 and the following apply.

Copyright International Organization for Standardization
Reproduced by IHS under license with ISO
No reproduction or networking permitted without license from IHS Not for Resale

3.1.1
channel
end-to-end transmission path connecting any two pieces of application-specific equipment [3.1.15 of ISO/IEC 11801:2002]

NOTE A transmission path may use one or more pairs, may share a pair with another path, for example power feeding and information may run over the same pair.

3.1.2
coverage area
area served by terminal equipment connected to a telecommunications outlet

3.1.3
coverage area cord
cord connecting the telecommunications outlet to terminal equipment that serves a coverage area (for example, wireless access point)

3.1.4
grid
arrangement of multiple contiguous coverage areas

3.1.5
information and communications technologies (ICT)
group of applications using information and communications (telecommunications) technologies

3.1.6
link
transmission path between two cabling system interfaces

3.1.7
permanent link
transmission path between the telecommunications outlet and the floor distributor [3.1.52 of ISO/IEC 11801:2002]

NOTE The permanent link does not include work area cords, coverage area cords, equipment cords, patch cords and jumpers, but includes the connection at each end. It can include a CP link.

3.1.8
remote power feeding
supply of power different from mains power to application-specific equipment via balanced cabling

3.1.9
space (telecommunications)
area used for housing the installation and termination of telecommunications equipment (IT) and cabling [3.1.25 of ISO/IEC 18010:2002]

NOTE Examples of spaces are equipment rooms, telecommunications rooms, work areas, coverage areas and maintenance holes/handholes.

3.1.10
terminal equipment
equipment that provides access to an application / service at a telecommunications outlet

3.1.11
wireless access point
terminal equipment that provides service to wireless end point devices

Copyright International Organization for Standardization
Reproduced by IHS under license with ISO
No reproduction or networking permitted without license from IHS Not for Resale

3.2 Abbreviations

C	Connection
CP	Consolidation Point
DTE	Data Terminal Equipment
EMC	Electromagnetic Compatibility
EQP	Transmission Equipment
ffs	for further study
FD	Floor Distributor
ICT	Information and Communications Technology
IT	Information Technology
MUTO	Multi-user telecommunications outlet
TE	Terminal Equipment
TO	Telecommunications Outlet

4 Conformance

For a cabling installation intended for use with wireless applications to conform to this Technical Report, the following shall apply.

a) The configuration, structure and topology of cabling shall conform to Clause 5.

b) The entire system shall be composed of channels and links that meet the necessary level of performance specified in Clause 6.

c) The coverage and location of the telecommunications outlet shall conform to Clause 7.

d) The cabling interfaces to the wireless access points shall conform to Clause 8.

e) When used, power delivery over balanced cabling shall conform to Clause 9.

f) System administration shall meet the requirements of ISO/IEC 14763-1.

g) System pathways and spaces shall meet the requirements of ISO/IEC 18010.

h) Regulations concerning safety and EMC shall be met as applicable to the location of the installation.

In all other respects, the cabling infrastructure shall be in full compliance with ISO/IEC 11801. No portion of this Technical Report shall be used to negate or replace the minimum requirements of ISO/IEC 11801.

Copyright International Organization for Standardization
Reproduced by IHS under license with ISO
No reproduction or networking permitted without license from IHS Not for Resale

5 Configuration, structure and topology

5.1 General

This clause identifies the functional elements, configuration and topology of a horizontal system to support wireless access points.

5.2 Functional elements

The functional elements of the horizontal cabling system are as follows:

- floor distributor (FD);
- horizontal cable;
- consolidation point (CP) - optional;
- telecommunications outlet (TO).

The type and number of functional elements used depends upon the type of premises and the applications served. It is possible for the functions of multiple elements to be combined into a single element. Equipment and coverage area cords used to connect the transmission equipment to the cabling subsystem are considered to be part of the cabling channel and shall meet the applicable requirements of ISO/IEC 11801.

Equipment is connected with coverage area cords to the telecommunications outlets and with equipment cords to the distributors. During planning, consideration of a logical boundary between coverage areas served from different floor distributors should be considered. For example, such a boundary may be at a fixed structural boundary within the building or at areas that do not require coverage.

5.3 Cabling subsystems

A horizontal subsystem shall be used to connect the wireless access point serving a coverage area to equipment at a distributor. The horizontal cabling subsystem ends at the telecommunications outlet. TOs that support wireless access points serving coverage areas should connect to equipment at distributors on the same floor. Active equipment shall not be connected between the floor distributor and the telecommunications outlet.

Functional elements and requirements for campus backbone subsystems, building backbone subsystems and connections between subsystems shall comply with ISO/IEC 11801.

5.4 Topology

The horizontal cabling used to serve wireless coverage areas shall be configured in a star topology.

Passive connections between the horizontal cabling subsystem and other subsystems shall be achieved using cross-connections.

Copyright International Organization for Standardization
Reproduced by IHS under license with ISO
No reproduction or networking permitted without license from IHS Not for Resale

6 Media selection and performance

The wireless coverage area should be served by a 4-pair balanced cabling link. In addition to information transfer, balanced cabling may be used to concurrently deliver low voltage power to wireless access points from the telecommunications room. If optical fibre cabling is used, separate mains power access shall be provided to serve its associated wireless access point. Each coverage area shall be served by:

- at least 4 balanced pairs capable of meeting class D, E or F channel requirements in accordance with ISO/IEC 11801;

or

- at least two optical fibres within at least one cable, and capable of meeting class OF-300, OF-500 or OF-2000 in accordance with ISO/IEC 11801.

Compliance to the applicable performance classes shall be achieved as specified in ISO/IEC 11801, Clause 4.

For balanced cabling, 2 pairs per interface may be used. However, this may require pair reassignment and will not support power delivery over non-data pairs, or 4-pair applications. Pair reassignment by means of inserts is allowed.

7 Telecommunications outlet coverage and location

7.1 General

The design of generic cabling shall provide for telecommunications outlets to be installed throughout the wireless grid. All connections from a wireless access point to the horizontal cabling infrastructure shall be made at a telecommunications outlet that conforms to ISO/IEC 11801, Clause 10. A sufficient density of telecommunications outlets will enhance the ability of the cabling to accommodate a wide range of wireless applications and appropriate coverage within the premises. Telecommunications outlets may be presented individually or in groups. Each wireless coverage area shall be served by a minimum of one telecommunications outlet.

Wireless access points are sometimes positioned to provide coverage areas that serve the same building space (for example to provide additional bandwidth). In such cases, multiple horizontal cabling channels shall be provided to locations where co-located coverage areas are planned.

7.2 Provisioning

Each telecommunications outlet shall be mounted in fixed locations and shall have a permanent means of identification that is visible when coverage area cords are connected to it. Because accessibility and flexure of coverage area cords is typically limited to installation, rather than use, they may be made using solid or stranded cables.

If used, application-specific devices such as baluns, adapters and power delivery apparatus shall be external to the telecommunications outlet.

Copyright International Organization for Standardization
Reproduced by IHS under license with ISO
No reproduction or networking permitted without license from IHS Not for Resale

7.3 Single user TO assembly

The implementation topology shall be selected from the options provided in ISO/IEC 11801 Clause 7 for balanced cabling and in ISO/IEC 11801 Clause 8 for optical fibre cabling.

In addition, where the single-user TO assembly is used:

a) a single-user TO assembly should be located in installer-accessible locations.

b) the performance contribution of coverage area cords, patch cords and equipment cords shall be taken into account to ensure that the channel requirements of Clause 6 are met.

7.4 Multi-user TO assembly (MUTO)

A single assembly of TOs may be used to serve more than one coverage area in a wireless grid. The implementation topology shall be selected from the options provided in ISO/IEC 11801 Clause 7 for balanced cabling and in ISO/IEC 11801 Clause 8 for optical fibre cabling. Such an assembly of TOs shall be known as a multi-user TO assembly or MUTO.

In addition, where the multi-user TO assembly is used:

a) a multi-user TO assembly shall be placed in a centralised location in the wireless grid so that contiguous groups of coverage areas are served by at least one multi-user TO assembly;

b) a multi-user TO assembly should be limited to serving only the number of coverage areas within a proximity determined by the total length of the equipment cable, the horizontal cable between the FD and MUTO, and the length of the coverage area cable needed to connect to the furthest wireless access point to be connected;

c) a multi-user TO assembly should be located in an installer-accessible, permanent location. If it is concealed, a visible identifier in the occupied space should identify its location;

d) a multi-user TO assembly shall not be installed in areas that are obstructed by fixed building structures or furnishings;

e) the performance contribution of coverage area cords, patch cords and equipment cords shall be taken into account to ensure that the channel requirements of Clause 6 are met;

f) the length and routing of the coverage area cord should permit organized cable management that enables tracing and minimizes opportunities for incidental damage.

Copyright International Organization for Standardization
Reproduced by IHS under license with ISO
No reproduction or networking permitted without license from IHS Not for Resale

7.5 Consolidation point

The installation of a consolidation point in the horizontal cabling between the floor distributor and the telecommunications outlet may be useful in an environment where the flexibility of relocating TOs in coverage areas is required. One consolidation point is permitted between a FD and any TO. The consolidation point shall only contain passive connecting hardware and shall not be used for cross-connections. A single consolidation point may be used to serve horizontal cabling links that extend to both work areas and coverage areas.

In addition, where a consolidation point is used:

a) the consolidation point should be limited to serving the number of coverage areas, work areas or both, as determined by the maximum channel length;

b) a consolidation point should be located in accessible locations;

c) for balanced cabling, the consolidation point shall be located so that there is a minimum of 15 m from the consolidation point to the floor distributor;

d) a consolidation point shall be part of the administration system.

7.6 Dimensioning and configuring

Operating range performance prediction provides valuable input for determination of telecommunications outlet locations and should be performed and taken into account in the design of the horizontal subsystem. Similarly, a site survey should be performed prior to location selection and installation of wireless access points.

The design and positioning of the floor distributor and telecommunications outlets should ensure that the lengths of patch cords/jumpers and equipment cords are minimised and administration should ensure that the design lengths are maintained during operation.

TOs that serve coverage areas in a uniform open space should be located to support a “honeycomb” or hexagonal wireless grid geometry, as shown in Figure 1.

Copyright International Organization for Standardization
Reproduced by IHS under license with ISO
No reproduction or networking permitted without license from IHS Not for Resale

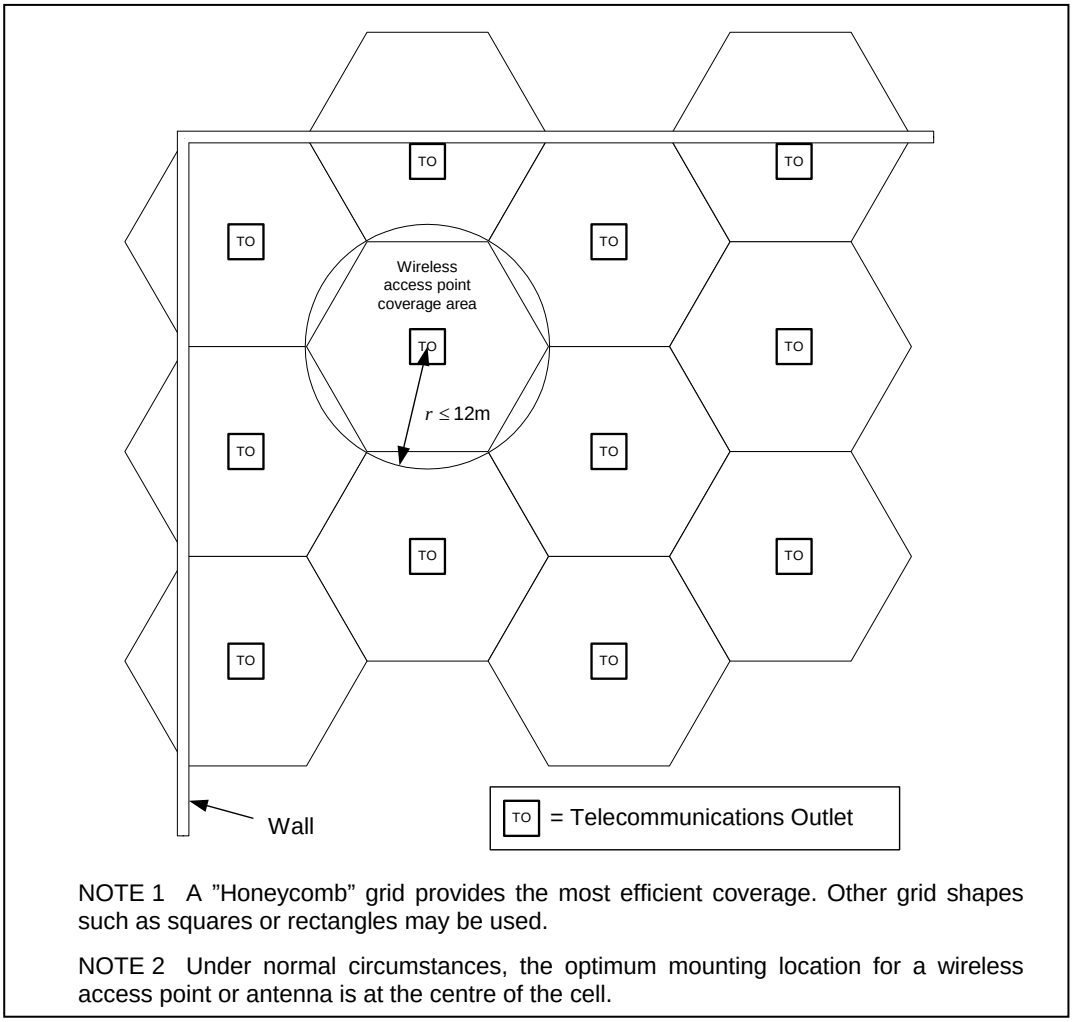

NOTE 1 A ”Honeycomb” grid provides the most efficient coverage. Other grid shapes such as squares or rectangles may be used.

NOTE 2 Under normal circumstances, the optimum mounting location for a wireless access point or antenna is at the centre of the cell.

Figure 1 – Grid of telecommunications outlets for wireless coverage areas

Cabling that serves the wireless grid should be located in or on the ceilings directly above the floor space it serves. The number and placement of telecommunications outlets depends on the wireless application, building type, density of wireless users, coverage needs on adjacent floors, and desired quality of service. Based on these factors, the coverage area radius can range from 3 m to 30 m (see Table A.1). To accommodate most wireless applications, the coverage area radius should not exceed 12 m. In general TOs should be centrally located in their associated coverage areas and MUTOs should be centrally located in their associated coverage area grids.

In certain cases, wireless terminal equipment may be located in areas that are not readily accessible by building occupants.

NOTE 1 Ceiling height should be considered when designing the coverage area grid to be served by the horizontal cabling. For example, placement of wireless access points on ceilings that exceed a 3 m height may result in a lower coverage area radius at floor height.

NOTE 2 See Annex A for wireless networking applications supported by this Technical Report and their associated typical indoor range.

Copyright International Organization for Standardization
Reproduced by IHS under license with ISO
No reproduction or networking permitted without license from IHS Not for Resale

8 Interfaces

The channel is the transmission path between equipment such as a LAN switch/hub and the wireless access point. A typical channel would consist of the horizontal subsystem together with coverage area and equipment cords. For longer reach services, the channel would be formed by the connection of two or more subsystems (including coverage area and equipment cords). The performance of the channel excludes the connections at the application-specific equipment.

The permanent link is the transmission path of an installed cabling subsystem including the connecting hardware at the ends of the installed cable. In the horizontal cabling subsystem, the permanent link consists of the telecommunications outlet, the horizontal cable, an optional CP and the termination of the horizontal cable at the floor distributor. The permanent link includes the connections at the ends of the installed cabling.

Equipment interfaces to generic cabling are located at the ends of each subsystem. Any distributor may have an equipment interface to an external service at any port, and may use either interconnects or cross-connects. Refer to ISO/IEC 11801 Clause 7 for balanced cabling and in ISO/IEC 11801 Clause 8 for optical fibre cabling. The consolidation point does not provide an equipment interface to the generic cabling system.

9 Power delivery over balanced cabling

Power may be provided to wireless access points and other types of DTEs by way of the balanced cabling interfaces. In this case, power may be introduced to the balanced cabling channel at the FD.

When midspan power insertion equipment replaces a generic cabling component or components, the data pairs shall meet the performance requirements of the component or components being replaced (for example, patch cord, patch panel or combination thereof), regardless of the interfaces used for input and output connections. See A.4 for information on power provisioning.

Placement of mid-span power insertion equipment shall be external to the permanent link. See Figure 2.

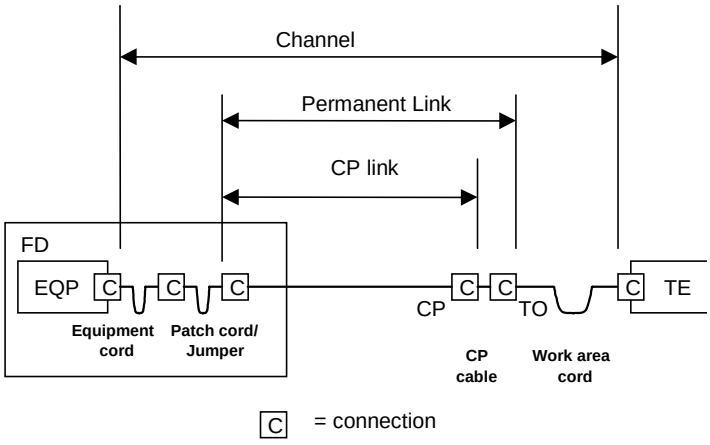

Figure 2 – Channel and permanent link

Copyright International Organization for Standardization
Reproduced by IHS under license with ISO
No reproduction or networking permitted without license from IHS
Not for Resale

Annex A
(informative)

Supported applications

A.1 General

Wireless access points that are connected to cabled networks provide an interface to two distinct networking applications: one that is associated with the cabled equipment, and one that is associated with the wireless equipment.

A.2 Cabling applications

Applications that are supported by the balanced and optical fibre cabling specified in this Technical Report are identical to those specified in Annex F of ISO/IEC 11801. Other applications may also be supported.

A.3 Wireless applications

Cabling specified in this Technical Report is intended to support the deployment of the wireless applications listed in Table A.1. Other applications may also be supported. Some wireless equipment or applications may have a typical indoor range of less than 12 m and can also be supported by using a shorter coverage area radius. The applicability of this document is limited to the standards listed in Table A.1.

Table A.1 – Supported wireless applications

Application Standard	Description	Typical indoor range (radius)
IEEE 802.11	Wireless Local Area Networks (2 Mb/s @ 2,4 GHz or infrared)	30 m
IEEE 802.11a	Wireless Local Area Networks (54 Mb/s @ 5 GHz)	12 m
IEEE 802.11b	Wireless Local Area Networks (11 Mb/s @ 2,4 GHz)	30 m
IEEE 802.11g	Wireless Local Area Networks (54 Mb/s @ 2,4 GHz)	12 m
DECT	Digital European Cordless Telephony (1 Mb/s @ 1,8 GHz)	30 m (ffs)
Bluetooth II	ISM Band 1 Mb/s @ 2,4 GHz	12 m (ffs)

A.4 Power provisioning

Cabling specified in this Technical Report is intended to support the connection of applications such as twisted pair Ethernet to wireless access points whose power is supplied by way of the balanced cabling channel as specified in IEEE 802.3af. Other power provisioning applications may also be supported.

Copyright International Organization for Standardization
Reproduced by IHS under license with ISO
No reproduction or networking permitted without license from IHS Not for Resale

Bibliography

Bluetooth Specification Version1.0B: 1999, *Specification of the Bluetooth System — Digital Enhanced Cordless Telecommunications — Wireless connections made easy*

ETS 300 175, *Digital Enhanced Cordless Telecommunications — DECT (European Standard)*

IEEE Std 802.3af-2003, *IEEE Standard for Information technology—Telecommunications and information exchange between systems—Local and metropolitan area networks—Specific requirements—Part 3: Carrier Sense Multiple Access with Collision Detection (CSMA/CD) Access Method and Physical Layer Specifications—Amendment: Data Terminal Equipment (DTE) Power via Media Dependent Interface (MDI)*

IEEE Std 802.11-1999, *IEEE Standard for Information technology—Telecommunications and information exchange between systems—Local and metropolitan area networks—Specific requirements—Part 11: Wireless LAN Medium Access Control (MAC) and Physical Layer (PHY) Specifications—Also published as ISO/IEC 8802-11:1999*

IEEE Std 802.11a-1999, *Supplement to IEEE Standard for Information technology. Telecommunications and information exchange between systems. Local and metropolitan area networks. Specific requirements—Part 11: Wireless LAN Medium Access Control (MAC) and Physical Layer (PHY) specifications—High-speed Physical Layer in the 5 GHz Band — Also published as ISO/IEC 8802-11:1999/Amd 1:2000(E)*

IEEE Std 802.11b-1999, *Supplement to IEEE Standard for Information technology—Telecommunications and information exchange between systems—Local and metropolitan area networks—Specific requirements—Part 11: Wireless LAN Medium Access Control (MAC) and Physical Layer (PHY) specifications: Higher-Speed Physical Layer Extension in the 2.4 GHz Band*

IEEE Std 802.11d-2001, *IEEE Standard for Information technology—Telecommunications and information exchange between systems—Local and metropolitan area networks—Specific requirements—Part 11: Wireless LAN Medium Access Control (MAC) and Physical Layer (PHY) specifications—Amendment 3: Specification for operation in additional regulatory domains*

IEEE Std 802.11f-2003, *IEEE Recommended Practice for Multi-Vendor Access Point Interoperability via an Inter-Access Point Protocol Across Distribution Systems Supporting IEEE 802.11 Operation*

IEEE Std 802.11g-2003, *IEEE Standard for Information technology— Telecommunications and information exchange between systems—Local and metropolitan area networks—Specific requirements—Part 11: Wireless LAN Medium Access Control (MAC) and Physical Layer (PHY) specifications, Amendment 4: Further Higher Data Rate Extension in the 2.4 GHz Band*

ISO/IEC 14763-2, *Information Technology – Implementation and operation of customer premises cabling – Part 2: Planning and installation*

ISO/IEC 14763-3, *Information Technology – Implementation and operation of customer premises cabling – Part 3: Testing of optical fibre cabling*

Copyright International Organization for Standardization
Reproduced by IHS under license with ISO
No reproduction or networking permitted without license from IHS
Not for Resale

Copyright International Organization for Standardization
Reproduced by IHS under license with ISO
No reproduction or networking permitted without license from IHS
Not for Resale

--`,,`,,`-`-`,,`,,`,`,,`---

Copyright International Organization for Standardization
Reproduced by IHS under license with ISO
No reproduction or networking permitted without license from IHS

Not for Resale

ISBN 2-8318-7606-0



ICS 35.200

Typeset and printed by the IEC Central Office
GENEVA, SWITZERLAND

Copyright International Organization for Standardization
Reproduced by IHS under license with ISO
No reproduction or networking permitted without license from IHS

Not for Resale