TECHNICAL REPORT

# ISO/IEC TR 23000-1

First edition
2007-02-01

# Information technology — Multimedia application format (MPEG-A) —

## Part 1: Purpose for multimedia application formats

*Technologies de l'information — Format pour application multimédia (MPEG-A) —*

*Partie 1: Objectif des formats pour application multimédia*

Reference number
ISO/IEC TR 23000-1:2007(E)

© ISO/IEC 2007

Copyright International Organization for Standardization
Provided by IHS under license with ISO
No reproduction or networking permitted without license from IHS

Not for Resale

**PDF disclaimer**

This PDF file may contain embedded typefaces. In accordance with Adobe's licensing policy, this file may be printed or viewed but shall not be edited unless the typefaces which are embedded are licensed to and installed on the computer performing the editing. In downloading this file, parties accept therein the responsibility of not infringing Adobe's licensing policy. The ISO Central Secretariat accepts no liability in this area.

Adobe is a trademark of Adobe Systems Incorporated.

Details of the software products used to create this PDF file can be found in the General Info relative to the file; the PDF-creation parameters were optimized for printing. Every care has been taken to ensure that the file is suitable for use by ISO member bodies. In the unlikely event that a problem relating to it is found, please inform the Central Secretariat at the address given below.

© ISO/IEC 2007

All rights reserved. Unless otherwise specified, no part of this publication may be reproduced or utilized in any form or by any means, electronic or mechanical, including photocopying and microfilm, without permission in writing from either ISO at the address below or ISO's member body in the country of the requester.

ISO copyright office
Case postale 56 • CH-1211 Geneva 20
Tel. + 41 22 749 01 11
Fax + 41 22 749 09 47
E-mail copyright@iso.org
Web www.iso.org

Published in Switzerland



Copyright International Organization for Standardization
Provided by IHS under license with ISO
No reproduction or networking permitted without license from IHS
Not for Resale

© ISO/IEC 2007 – All rights reserved

# Foreword

ISO (the International Organization for Standardization) and IEC (the International Electrotechnical Commission) form the specialized system for worldwide standardization. National bodies that are members of ISO or IEC participate in the development of International Standards through technical committees established by the respective organization to deal with particular fields of technical activity. ISO and IEC technical committees collaborate in fields of mutual interest. Other international organizations, governmental and non-governmental, in liaison with ISO and IEC, also take part in the work. In the field of information technology, ISO and IEC have established a joint technical committee, ISO/IEC JTC 1.

International Standards are drafted in accordance with the rules given in the ISO/IEC Directives, Part 2.

The main task of the joint technical committee is to prepare International Standards. Draft International Standards adopted by the joint technical committee are circulated to national bodies for voting. Publication as an International Standard requires approval by at least 75 % of the national bodies casting a vote.

In exceptional circumstances, the joint technical committee may propose the publication of a Technical Report of one of the following types:

— type 1, when the required support cannot be obtained for the publication of an International Standard, despite repeated efforts;

— type 2, when the subject is still under technical development or where for any other reason there is the future but not immediate possibility of an agreement on an International Standard;

— type 3, when the joint technical committee has collected data of a different kind from that which is normally published as an International Standard ("state of the art", for example).

Technical Reports of types 1 and 2 are subject to review within three years of publication, to decide whether they can be transformed into International Standards. Technical Reports of type 3 do not necessarily have to be reviewed until the data they provide are considered to be no longer valid or useful.

Attention is drawn to the possibility that some of the elements of this document may be the subject of patent rights. ISO and IEC shall not be held responsible for identifying any or all such patent rights.

ISO/IEC TR 23000-1, which is a Technical Report of type [3], was prepared by Joint Technical Committee ISO/IEC JTC 1, *Information technology*, Subcommittee SC 29, *Coding of audio, picture, multimedia and hypermedia information*.

ISO/IEC TR 23000 consists of the following parts, under the general title *Information technology — Multimedia application format (MPEG-A)*:

— *Part 1: Purpose for multimedia application formats* [Technical Report]

— *Part 2: MPEG music player application format*

— *Part 3: MPEG photo player application format*

— *Part 4: Musical slide show application format*

--`,,```,,,,````-`-`,,`,,`,`,,`---

© ISO/IEC 2007 – All rights reserved

Copyright International Organization for Standardization
Provided by IHS under license with ISO
No reproduction or networking permitted without license from IHS
Not for Resale

# Introduction

ISO/IEC 23000 (also known as “MPEG-A”) is a new MPEG standard developed by selecting existing technologies from all published MPEG standards and combining them into so-called “Multimedia Application Formats” or MAFs.

MPEG-A aims to serve clearly-identified market needs by facilitating the swift development of innovative and standards-based multimedia applications and services. This application-driven process results in normative specifications of multimedia formats, along with reference software implementation, allowing interoperability at an application level.


© ISO/IEC 2007 – All rights reserved
Copyright International Organization for Standardization
Provided by IHS under license with ISO
No reproduction or networking permitted without license from IHS
Not for Resale

# Information technology — Multimedia application format (MPEG-A) —

## Part 1:
## Purpose for multimedia application formats

## 1 Scope

This Technical Report provides an overview of the MPEG-A standard highlighting the rationale for such a new standard.

Furthermore, it describes the specific concept behind the Multimedia Application Formats (MAFs), which constitute the parts of this Technical Report.

Finally, the report gives a high-level description of the existing Multimedia Application Formats.

## 2 Terms and definitions

For the purposes of this document, no new terms and definitions are relevant.

## 3 Symbols (and abbreviated terms)

ATSC Advanced Television Steering Committee

DVB Digital Video Broadcasting

DVD Digital Versatile Disk

ISMA Internet Streaming Media Alliance

JPEG Joint Photographic Experts Group

MAF Multimedia Application Format

MP3 MPEG-1 Audio Layer III

MPEG Moving Picture Experts Group

© ISO/IEC 2007 – All rights reserved

Copyright International Organization for Standardization
Provided by IHS under license with ISO
No reproduction or networking permitted without license from IHS
Not for Resale

# 4 The MPEG-A standard

## 4.1 The rationale

Since 1992, MPEG has produced a sequence of standards for compressing multimedia data including audio and video compression (MPEG-1, MPEG-2 and MPEG-4). In contrast to media compression, MPEG-7 constitutes a suite of tools for meta-data representation describing the content of multimedia data. The group has also developed MPEG-21, a multimedia framework to facilitate creation, distribution and consumption of Digital Items. Among other things, MPEG-21 includes standardized components which can be used by industry or industry consortia for the development of digital rights management systems facilitating interoperability.

In this suite of standards, MPEG-1 and MPEG-2 are two technologies are used around the world in a number of large-scale consumer products (DTV, DVD, MP3, etc.). These two MPEG standards are standards serving the needs of clearly identified markets and industries. Therefore, most industry representatives as well as consumers have a good understanding of what the standards offer in terms of technology and how these standards can be used to create products.

The ISO has extended the list of feature-rich multimedia technologies by issuing further MPEG standards such as MPEG-4, MPEG-7 and MPEG-21. However, it has become increasingly difficult for the industry to master all the technical options and to evaluate their relative benefits.

In order for the industry to fully leverage the existing body of MPEG technologies, Industry adoption would be facilitated to achieve interoperability on the application level and to offer guidance on how to use these MPEG standards in new and innovative ways. Multimedia Application Formats provide this guidance by offering combinations of various MPEG technologies to address specific application scenarios.

In the past, MPEG has addressed the problem of providing solutions with scoped complexity by defining profiles. A profile in MPEG represents a subset of tools from a part of an MPEG standard (subset of the syntax) in order to carve out a part of the standard to arrive at an appropriate trade-off in terms of functionality and complexity for relevant classes of applications.

For example, in MPEG-2 Video there exists the “Main Profile”, which represents a subset of the complete MPEG-2 Video specification and which is tailored to digital television services. Other examples for widely known profiles in MPEG are the “Simple Profile” or the “Advanced Simple Profile” in the MPEG-4 Visual standard or the widespread MP3 audio coding format, which is actually a subset of MPEG-1 audio coding. However, these profiles have always been defined within a specific standard, e.g. within MPEG-2 Audio or MPEG-4 Visual.

The concept of picking components from different standards and combining them with other technologies to arrive at industry-specific standards is not new at all. So far, industry consortia like the DVD-Forum, DVB, ISMA and ATSC have done this successfully. Consider the example of the ubiquitous DVD, which employs MPEG-2 Video while using non-MPEG technology for coding of multi-channel audio. The DVD is a commercially successful technology and has had a major impact on consumer electronics as well as on the content industry.

## 4.2 The Concept of MPEG-A

MPEG-A supports a process to achieve a fast standardization by selecting readily tested and verified tools taken from the MPEG body of standards and combining them to form a MAF. This concept builds on the toolbox approach of existing MPEG standards. This means that there is no need for time-consuming research, development and testing of new technologies. If MPEG cannot provide a needed piece of technology, then additional technologies originating from other organizations can be included by reference in order to facilitate the envisioned MAF. Hence, a MAF is created by cutting horizontally through all MPEG standards, selecting existing parts and profiles as appropriate for the envisioned application.


© ISO/IEC 2007 – All rights reserved
Copyright International Organization for Standardization
Provided by IHS under license with ISO
No reproduction or networking permitted without license from IHS
Not for Resale

Consider Figure 1, which provides an illustration of this concept. MPEG standards are represented by the vertical bars on the right, and profiles are represented by the bold boxes. Non-MPEG standards or technologies are represented as vertical bars on the left. A particular MAF uses profiles from each technology and combines them in a single standard.

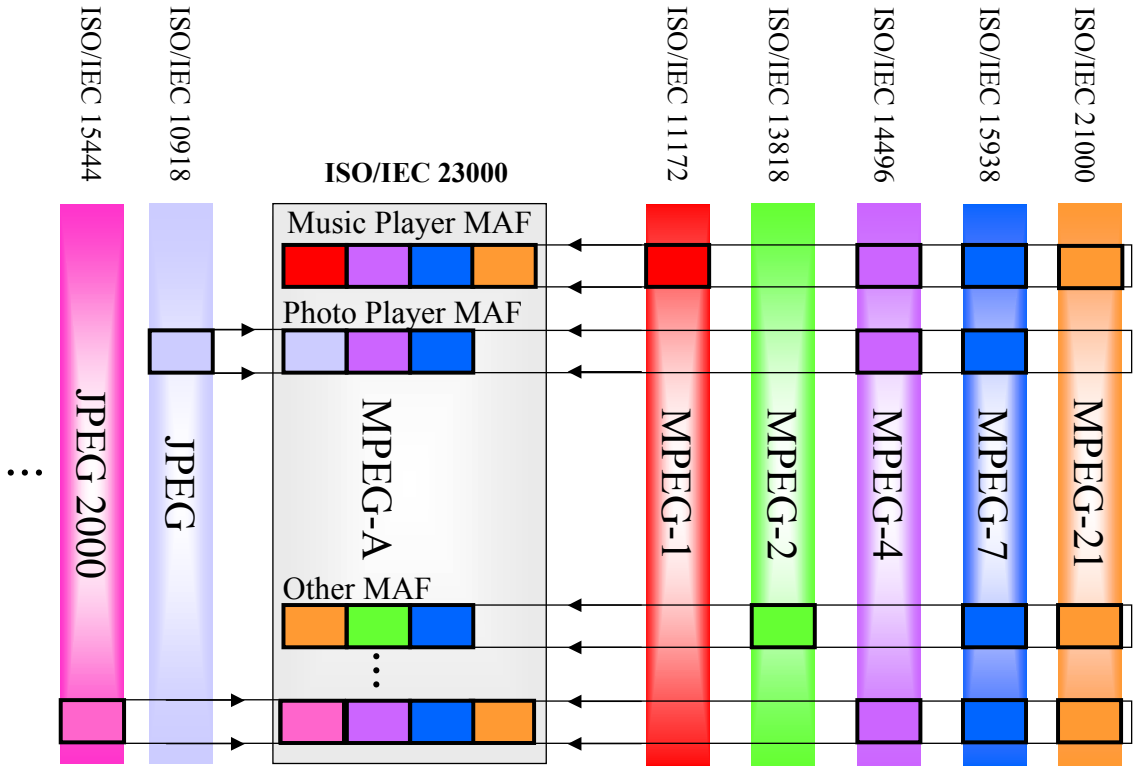


**Figure 1 — Conceptual overview of MPEG-A**

Ideally, a MAF specification consists of references to existing profiles within MPEG standards. However, if the appropriate profiles do not exist, then the experts can select and quantify the tools and profiles they believe are necessary to develop the MAF, which in turn provides feedback to the ongoing profiling activities within MPEG. It is also conceivable that the MAF process will help to identify gaps in the technology landscape of MPEG standards, gaps that may be mended subsequently by a new standardization campaign.

## 4.3 Benefits to the Industry

The main purpose of MAFs is to reduce the effort involved in selecting MPEG technologies and combining them to meet the specific needs of an application area. Firms and industries interested in an application area for which a MAF exists can benefit from a ready-made format specification that has been put together by a team of experts. This can be used as a starting point to developing products, possibly by introducing any necessary extensions.

Using MPEG standards is particularly interesting since all MAFs come with a reference software implementation, which can be used for either experimenting with the standard or for a speedy development of corresponding products and services. Compare this to the daunting task that industry currently faces of poring through thousands of pages of ISO standards to find the few elements they may need to create standards-based products.

In some cases, firms may choose to adopt a strictly conformant implementation of the MAF, thus facilitating interoperability across products by using standardized media formats which comprise the latest multimedia technology and which are designed to meet the needs of a specific application domain.

© ISO/IEC 2007 – All rights reserved

Copyright International Organization for Standardization
Provided by IHS under license with ISO
No reproduction or networking permitted without license from IHS
Not for Resale

Alternatively, firms and industries interested in using MPEG technologies may consider providing input to MPEG in order to initiate the process leading to the specification of a new MAF.

# 5 Normative Implications

## 5.1 Introduction

MPEG-A is being developed through a combination of MPEG's efforts to standardise the parts of the Multimedia Application Formats where it has the appropriate expertise and the integration with other multimedia technologies that have been or are being developed by other bodies. MPEG hence contributes to the quick uptake of rich multimedia applications and services by developing new formats to provide the required interoperability on an application level.

## 5.2 Conformance

Conformance is an essential element of each MPEG standard. Each part of ISO/IEC 23000 will contain the conformance information.

## 5.3 Reference software

Reference software is an essential element of each MPEG standard. Each part of ISO/IEC 23000 will contain the corresponding reference software.

# 6 Overview of the MPEG-A parts

## 6.1 General

This clause gives a high-level overview of the different MPEG-A parts that have already been developed or are currently under development.

## 6.2 Part 1 — Purpose for Multimedia Application Formats

— Part 1 is this document.

## 6.3 Part 2 — Music Player Multimedia Application Format

The Music Player MAF is published as ISO/IEC 23000-2. The specification has been completed within a very short period of time [1]. This MAF specification shows how to carry MP3-coded audio information along with meta-data expressed as MPEG-7 data within the MPEG-4 and MPEG-21 framework.

MPEG-1/2 Audio Layer III, also known as MP3, is one of the most widely used MPEG standards. Since MP3 was specified, MPEG has developed a number of additional standards. MPEG-4 specifies what the industry expects to be another very successful specification, the MPEG-4 File Format, while MPEG-7 specifies meta-data, not only signal-derived but also archival meta-data such as Artist, Album and Song Title. As such, MPEG-4 and MPEG-7 represent an ideal environment to support the current "MP3 music library" user experience and to extend that experience in new directions.

Moving MP3 into the MPEG-4 world supports everything that users know and expect, while offering the capability to deliver a much richer music experience.


© ISO/IEC 2007 – All rights reserved
Copyright International Organization for Standardization
Provided by IHS under license with ISO
No reproduction or networking permitted without license from IHS
Not for Resale

Copyright International Organization for Standardization
Provided by IHS under license with ISO
No reproduction or networking permitted without license from IHS
Not for Resale

**ICS 35.040**

Price based on 4 pages

© ISO/IEC 2007 – All rights reserved
Copyright International Organization for Standardization
Provided by IHS under license with ISO
No reproduction or networking permitted without license from IHS
Not for Resale