TECHNICAL REPORT

ISO/IEC TR 18047-7

First edition
2005-10-15

Information technology — Radio frequency identification device conformance test methods —

Part 7: Test methods for active air interface communications at 433 MHz

Technologies de l'information — Méthodes d'essai de conformité du dispositif d'identification de radiofréquence —

Partie 7: Méthodes d'essai pour des communications actives d'une interface d'air à 433 MHz

Reference number
ISO/IEC TR 18047-7:2005(E)

© ISO/IEC 2005

--`,,```,,,,````-`-`,,`,,`,`,,`---

Copyright International Organization for Standardization
Reproduced by IHS under license with ISO
No reproduction or networking permitted without license from IHS

Not for Resale

PDF disclaimer

This PDF file may contain embedded typefaces. In accordance with Adobe's licensing policy, this file may be printed or viewed but shall not be edited unless the typefaces which are embedded are licensed to and installed on the computer performing the editing. In downloading this file, parties accept therein the responsibility of not infringing Adobe's licensing policy. The ISO Central Secretariat accepts no liability in this area.

Adobe is a trademark of Adobe Systems Incorporated.

Details of the software products used to create this PDF file can be found in the General Info relative to the file; the PDF-creation parameters were optimized for printing. Every care has been taken to ensure that the file is suitable for use by ISO member bodies. In the unlikely event that a problem relating to it is found, please inform the Central Secretariat at the address given below.

© ISO/IEC 2005

All rights reserved. Unless otherwise specified, no part of this publication may be reproduced or utilized in any form or by any means, electronic or mechanical, including photocopying and microfilm, without permission in writing from either ISO at the address below or ISO's member body in the country of the requester.

ISO copyright office
Case postale 56 • CH-1211 Geneva 20
Tel. + 41 22 749 01 11
Fax + 41 22 749 09 47
E-mail copyright@iso.org
Web www.iso.org

Published in Switzerland

Copyright International Organization for Standardization
Reproduced by IHS under license with ISO
No reproduction or networking permitted without license from IHS

© ISO/IEC 2005 – All rights reserved

Not for Resale

Contents

Page

Foreword ... iv

Introduction ... v

1 Scope ... 1

2 Normative references ... 1

3 Terms, definitions and abbreviated terms ... 2
3.1 Terms and definitions ... 2
3.2 Abbreviated terms ... 2

4 Conformance tests for ISO/IEC 18000-7 — 433 MHz ... 2
4.1 General ... 2
4.2 Default items applicable to the test methods ... 2
4.2.1 Test environment ... 2
4.2.2 Pre-conditioning ... 2
4.2.3 Default tolerance ... 2
4.2.4 Total measurement uncertainty ... 2
4.3 Test set-up and measurement equipment ... 2
4.3.1 General ... 2
4.3.2 Test set-up for interrogator testing ... 3
4.3.3 Test set-up for tag testing ... 4
4.3.4 Test equipment ... 4
4.4 Functional test – interrogator ... 5
4.4.1 Operating frequency accuracy ... 5
4.4.2 FSK modulation ... 5
4.4.3 Wakeup signal ... 6
4.4.4 Message preamble format and timing ... 7
4.4.5 Data coding and reference timing ... 8
4.4.6 Receiver bandwidth ... 9
4.5 Functional test - tag ... 9
4.5.1 Operating frequency accuracy ... 9
4.5.2 FSK modulation ... 10
4.5.3 Message preamble format and timing ... 10
4.5.4 Data coding and reference timing ... 12
4.5.5 Wakeup signal response ... 12

Bibliography ... 14

© ISO/IEC 2005 – All rights reserved

Copyright International Organization for Standardization
Reproduced by IHS under license with ISO
No reproduction or networking permitted without license from IHS
Not for Resale

Foreword

ISO (the International Organization for Standardization) and IEC (the International Electrotechnical Commission) form the specialized system for worldwide standardization. National bodies that are members of ISO or IEC participate in the development of International Standards through technical committees established by the respective organization to deal with particular fields of technical activity. ISO and IEC technical committees collaborate in fields of mutual interest. Other international organizations, governmental and non-governmental, in liaison with ISO and IEC, also take part in the work. In the field of information technology, ISO and IEC have established a joint technical committee, ISO/IEC JTC 1.

International Standards are drafted in accordance with the rules given in the ISO/IEC Directives, Part 2.

The main task of the joint technical committee is to prepare International Standards. Draft International Standards adopted by the joint technical committee are circulated to national bodies for voting. Publication as an International Standard requires approval by at least 75 % of the national bodies casting a vote.

In exceptional circumstances, the joint technical committee may propose the publication of a Technical Report of one of the following types:

— type 1, when the required support cannot be obtained for the publication of an International Standard, despite repeated efforts;

— type 2, when the subject is still under technical development or where for any other reason there is the future but not immediate possibility of an agreement on an International Standard;

— type 3, when the joint technical committee has collected data of a different kind from that which is normally published as an International Standard ("state of the art", for example).

Technical Reports of types 1 and 2 are subject to review within three years of publication, to decide whether they can be transformed into International Standards. Technical Reports of type 3 do not necessarily have to be reviewed until the data they provide are considered to be no longer valid or useful.

Attention is drawn to the possibility that some of the elements of this document may be the subject of patent rights. ISO and IEC shall not be held responsible for identifying any or all such patent rights.

ISO/IEC TR 18047-7, which is a Technical Report of type 2, was prepared by Joint Technical Committee ISO/IEC JTC 1, *Information technology*, Subcommittee SC 31, *Automatic identification and data capture techniques*.

ISO/IEC TR 18047 consists of the following parts, under the general title *Information technology — Radio frequency identification device conformance test methods*:

— *Part 3: Test methods for air interface communications at 13,56 MHz*

— *Part 4: Test methods for air interface communications at 2,45 GHz*

— *Part 7: Test methods for active air interface communications at 433 MHz*

Test methods for air interface communications below 135 kHz and at 860 MHz to 960 MHz will form the subjects of the future Parts 2 and 6, respectively.

© ISO/IEC 2005 – All rights reserved
Copyright International Organization for Standardization
Reproduced by IHS under license with ISO
No reproduction or networking permitted without license from IHS
Not for Resale

Introduction

ISO/IEC 18000-7 defines the air interface for radio frequency identification (RFID) devices operating in the 433,92 MHz Industrial, Scientific, and Medical (ISM) band used in item management applications. The purpose of this part of ISO/IEC TR 18047 is to provide a test method for ISO/IEC 18000-7.

This part of ISO/IEC TR 18047 contains all compliance measurements required to be fulfilled by a product in order to be compliant to ISO/IEC 18000-7.

--`,,```,,,,````-`-`,,`,,`,`,,`---

© ISO/IEC 2005 – All rights reserved

Copyright International Organization for Standardization
Reproduced by IHS under license with ISO
No reproduction or networking permitted without license from IHS
Not for Resale

Copyright International Organization for Standardization
Reproduced by IHS under license with ISO
No reproduction or networking permitted without license from IHS
Not for Resale

Information technology — Radio frequency identification device conformance test methods —

Part 7: Test methods for active air interface communications at 433 MHz

1 Scope

This part of ISO/IEC TR 18047 defines test methods for determining the conformance of radio frequency identification devices (tags and interrogators) for item management with the specifications given in ISO/IEC 18000-7, but does not apply to the testing of conformity with regulatory or similar requirements.

The test methods require only that the mandatory functions, and any optional functions which are implemented, be verified. This may, in appropriate circumstances, be supplemented by further, application-specific functionality criteria that are not available in the general case.

The interrogator and tag conformance parameters in this part of ISO/IEC TR 18047 are the following:

- mode-specific conformance parameters including nominal values and tolerances;
- parameters that apply directly affecting system functionality and inter-operability.

The following are not included in this part of ISO/IEC TR 18047:

- parameters that are already included in regulatory test requirements;
- high-level data encoding conformance test parameters (these are specified in ISO/IEC 15962).

Unless otherwise specified, the tests in this part of ISO/IEC TR 18047 apply exclusively to RFID tags and interrogator defined in ISO/IEC 18000-7.

2 Normative references

The following referenced documents are indispensable for the application of this document. For dated references, only the edition cited applies. For undated references, the latest edition of the referenced document (including any amendments) applies.

ISO/IEC 18000-7:2004, *Information technology — Radio frequency identification for item management — Part 7: Parameters for active air interface communications at 433 MHz*

ISO/IEC 19762 (all parts), *Information technology — Automatic identification and data capture (AIDC) techniques — Harmonized vocabulary*

ISBN 92-67-10188-9, 1993, *ISO Guide to the expression of uncertainty in measurement*

--`,,```,,,,````-`-`,,`,,`,`,,`---

© ISO/IEC 2005 – All rights reserved

Copyright International Organization for Standardization
Reproduced by IHS under license with ISO
No reproduction or networking permitted without license from IHS
Not for Resale

3 Terms, definitions and abbreviated terms

3.1 Terms and definitions

For the purposes of this document, the terms and definitions given in ISO/IEC 19762 apply.

3.2 Abbreviated terms

RSSI receiver signal strength indicator

4 Conformance tests for ISO/IEC 18000-7 — 433 MHz

4.1 General

This part of ISO/IEC TR 18047 specifies a series of tests to determine the conformance of interrogators and tags. The results of these tests shall be compared with the parameters specified in ISO/IEC 18000-7 to determine whether the interrogator or tag under test conforms.

4.2 Default items applicable to the test methods

4.2.1 Test environment

Unless otherwise specified, testing shall take place in an environment of temperature 23 °C ± 3 °C (73 °F ± 5 °F) and relative humidity of 40 % to 60 %.

4.2.2 Pre-conditioning

Where pre-conditioning is required by the test method, the tags and interrogators to be tested shall be conditioned to the test environment for an appropriate period of time before testing.

4.2.3 Default tolerance

Unless otherwise specified, a default tolerance of ± 5 % shall be applied to the quantity values given to specify the characteristics of the test equipment (e.g. linear dimensions) and the test method procedures (e.g. test equipment adjustments).

4.2.4 Total measurement uncertainty

The total measurement uncertainty for each quantity determined by these test methods shall be stated in the test report.

Basic information is given in “ISO Guide to the expression of uncertainty in measurement”, ISBN 92-67-10188-9, 1993.

4.3 Test set-up and measurement equipment

4.3.1 General

The long-range, high data-rate RFID system specified in ISO/IEC 18000-7 is designed for long-range operation. Therefore a good receiver characteristic on both side’s interrogator and tag (if applicable) is useful. The range of an RFID system also depends on the output power of the interrogator, which is set according to regulatory limits and application needs.

--`,,```,,,,````-`-`,,`,,`,`,,`---

© ISO/IEC 2005 – All rights reserved
Copyright International Organization for Standardization
Reproduced by IHS under license with ISO
No reproduction or networking permitted without license from IHS
Not for Resale

Subclause 4.3 defines the test set-up and measurement equipment for verifying the operation of a tag or an interrogator according to ISO/IEC 18000-7.

Test results shall not be influenced by the set-up method of the test.

Test set-ups include:

- test set-up for interrogator testing (see 4.3.2),
- test set-up for tag testing (see 4.3.3),
- test equipment (see 4.3.4).

4.3.2 Test set-up for interrogator testing

An interrogator with integral antenna(s) shall be equipped with temporary antenna connector(s), or coupling device(s) [i.e. sense antenna(s)] shall be used to connect to the test equipment.

A sense antenna shall not affect test results; appropriate distances (e.g. 3 m), antenna sizes and types (e.g. dipole antenna), as well as antenna polarization (i.e. circular polarization) shall be used. The antenna configuration and distance shall be included in the test report.

A control computer with appropriate software and user documentation provided by the vendor provides the control of all tests. All interrogator commands defined for this conformance testing are defined in ISO/IEC 18000-7 Command codes.

To set-up an interrogator with the appropriate test pattern and operational modes, one of the two methods shall be used (combinations shall also be possible):

- an implemented test mode,
- a tag for initialising the appropriate operational mode.

The air interface parameter in a test mode shall behave the same as the air interface parameter during normal usage.

Unless otherwise stated, the following frequency shall be used for all tests.

The frequency of the reference carrier shall be set to 433,92 MHz.

The implementation of the test mode shall be in accordance with the specified air interface parameters and timing in ISO/IEC 18000-7. Unless otherwise stated, the following parameters are valid for all measurements.

The frequency of the interrogator transmitter shall be within the tolerance specified in ISO/IEC 18000-7. The output power shall be set to the maximum allowed by local regulatory rules taking into consideration the antenna gain. A control computer is required to set up and trigger all interrogator activity, as shown in Figure 1. The RF test equipment in Figure 1 includes RF receiver (i.e. sense antenna with/without FM demodulator), spectrum analyser and logic analyser.

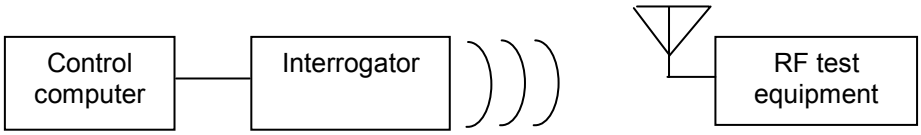

Figure 1 — Interrogator test system

© ISO/IEC 2005 All rights reserved

Copyright International Organization for Standardization
Reproduced by IHS under license with ISO
No reproduction or networking permitted without license from IHS
Not for Resale

4.3.3 Test set-up for tag testing

The conformance tests are designed to verify compliance with the basic radio-frequency parameters of the interrogator and tag.

A tag with integral antenna(s) shall be equipped with temporary antenna connector(s), or suitable coupling device(s) [i.e. antenna(s)] shall be used to connect to the test equipment.

A sense antenna shall not affect test results; appropriate distances (e.g. 3 m), antenna sizes and types (e.g. dipole antenna), as well as antenna polarization (i.e. circular polarization) shall be used. The antenna configuration and distance shall be included in the test report.

To set-up a tag with the test pattern and operational modes, one of the two methods shall be used (combinations shall also be possible):

- an implemented test mode,
- an interrogator for initialising the appropriate operational mode.

If no test mode is implemented in the tag, the conformance tests shall be performed during this operational period. For R/W-tags without a test mode, an interrogator for initialising the appropriate operational mode shall be used. Because the system is an Interrogator talks first active RFID system, the tag only transmits in response to Interrogator commands. The implementation of a test mode shall be in accordance with the specified air interface parameters and timings in ISO/IEC 18000-7. The air interface parameter in the test mode shall behave the same as the air interface parameter during normal usage.

A control computer and interrogator is required to set up and trigger all tag activity, as shown in Figure 2.

The RF test equipment in Figure 2 includes RF receiver (i.e. sense antenna with/without FM demodulator), spectrum analyser and logic analyser.

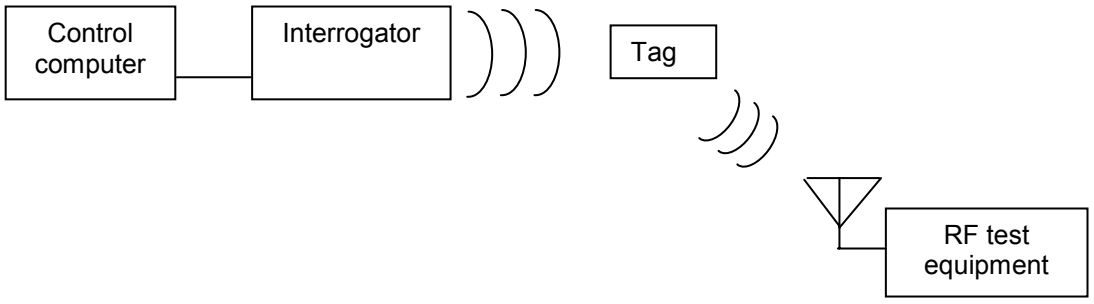

Figure 2 — Tag test system set-up

4.3.4 Test equipment

All tests shall be done with commercial test equipment. In addition to the measurement devices described below, appropriate devices such as power supplies, splitters, combiners and cables shall be used.

The reference point for all measurements shall be either (temporary) antenna connector(s), or appropriate coupling device(s). The reference point shall be documented in the test report.

4.3.4.1 Spectrum analyser

A spectrum analyser with the capability of digital demodulating and vector signal analysis capability shall be used. Appropriate trigger functionality shall be either implemented in the spectrum analyser, or generated externally with additional measurement devices.

© ISO/IEC 2005 – All rights reserved
Copyright International Organization for Standardization
Reproduced by IHS under license with ISO
No reproduction or networking permitted without license from IHS
Not for Resale

4.3.4.2 Modulation analyser

A modulation analyser with the capability of analysing the signal's central frequency and frequency deviation shall be used.

4.3.4.3 Signal generator

A signal generator for the 433 MHz band shall be used to generate an interrogator output signal for testing tags. The signal level for the tests shall be within the operational range of the receiver input of the tag. The input level shall be specified by the tag manufacturer and shall be documented in the test report.

4.3.4.4 Logic analyser

A logic analyser with memory shall be used for verification of the correct data. Therefore the analyser shall be capable of sampling at a rate of at least 100 million samples per second with a resolution of at least 8 bits at optimum scaling.

4.4 Functional test – interrogator

4.4.1 Operating frequency accuracy

4.4.1.1 Test objective

The objective of this test is to verify that the interrogator communication frequency is per ISO/IEC 18000-7 Interrogator to Tag Link Parameters.

4.4.1.2 Test procedure

The interrogator shall transmit a broadcast or point-to-point tag collection command, which includes a tag wakeup signal with a nominal duration of 2,5 s. The center frequency of the transmitted signal shall be measured.

A modulation analyser shall be used for this measurement.

4.4.1.3 Measurement values and limits

The Interrogator center frequency shall be within the frequency and frequency accuracy specified in ISO/IEC 18000-7, Interrogator to Tag Link Parameters Int:1 and Int:1c.

4.4.1.4 Test report

The test report shall give the measured frequencies. The pass/fail condition is determined by the values in 4.4.1.3.

4.4.2 FSK modulation

4.4.2.1 Test objective

The objective of this test is to ensure that the interrogator frequency deviation is within acceptable operating limits of 50 kHz nominal.

4.4.2.2 Test procedure

The interrogator shall transmit a collection command, which has a tag wakeup signal with a nominal duration of 2,5 s. The FSK frequency deviation of the transmitter shall be measured.

A modulation analyser shall be used for this measurement.

--`,,```,,,,````-`-`,,`,,`,`,,`---

© ISO/IEC 2005 – All rights reserved

Copyright International Organization for Standardization
Reproduced by IHS under license with ISO
No reproduction or networking permitted without license from IHS
Not for Resale

4.4.2.3 Measurement values and limits

The modulation frequency deviation shall be 50 kHz ± 5 kHz.

4.4.2.4 Test report

The test report shall give the measured modulation parameters. The pass/fail condition is determined by the value in 4.4.2.3 and the values defined in ISO/IEC 18000-7 Interrogator to Tag Link Parameters.

4.4.3 Wakeup signal

4.4.3.1 Test objective

The objective of this test is to verify that the wakeup signal carrier frequency and wakeup signal duration are within nominal value tolerances. This test is designed to ensure that the interrogator transmits a sub-carrier tone of 30 kHz ± 1,0 kHz that

- will correctly wake up quiet tags,
- will not be incorrectly interpreted as data.

4.4.3.2 Test procedure

The Interrogator shall transmit a tag collection command that initially transmits a tag wakeup signal, a 30 kHz sub-carrier tone for 2,5 s to 2,7 s, to wake up all tags in the range of the Interrogator.

An RF receiver with FM demodulator with receiver bandwidth and center frequency as defined in ISO/IEC 18000-7 Tag to Interrogator Link Parameters Tag:2a and Tag:1 and logic analyser shall be used for observing the correct wakeup coding and measuring the bit/symbol timing as shown in Figure 3.

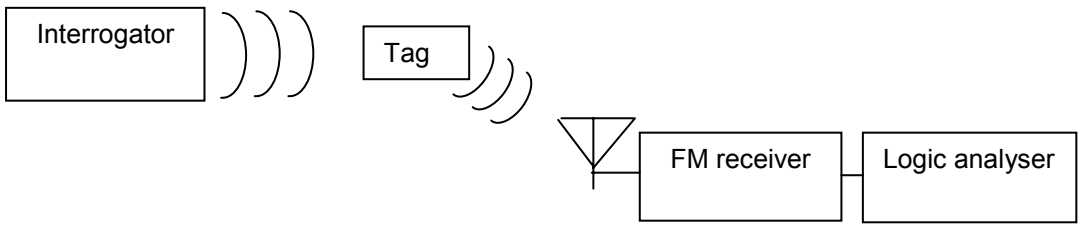

Figure 3 — Wakeup signal testing set-up

4.4.3.3 Measurement values and timing

Verify that the wakeup command for a single antenna consists of:

- Pulses of 32 µs ± 1 µs period, consisting of 16 µs ± 0,5 µs high and 16 µs ± 0,5 µs low,
- Wakeup signal duration of 2,5 s minimum to 2,7 s maximum.

All timing measurements shall be made at the signal midpoints.

4.4.3.4 Test report

The test report shall give the measured timing parameters. The pass/fail condition is determined by the values in 4.4.3.3, the carrier-tone frequency measurement and the values defined in ISO/IEC 18000-7 Interrogator to Tag Link Parameters for the forward link.

© ISO/IEC 2005 – All rights reserved
Copyright International Organization for Standardization
Reproduced by IHS under license with ISO
No reproduction or networking permitted without license from IHS
Not for Resale

4.4.4 Message preamble format and timing

4.4.4.1 Test objective

The objective of this test is to verify the interrogator preamble structure and timing.

Each interrogator command includes a preamble of 1 308 µs duration, as shown in Figure 4, with the first byte of a sample data packet. The pulse widths shown are in µs. Data bytes are transmitted significant bit first. The example byte shown is 0x64.

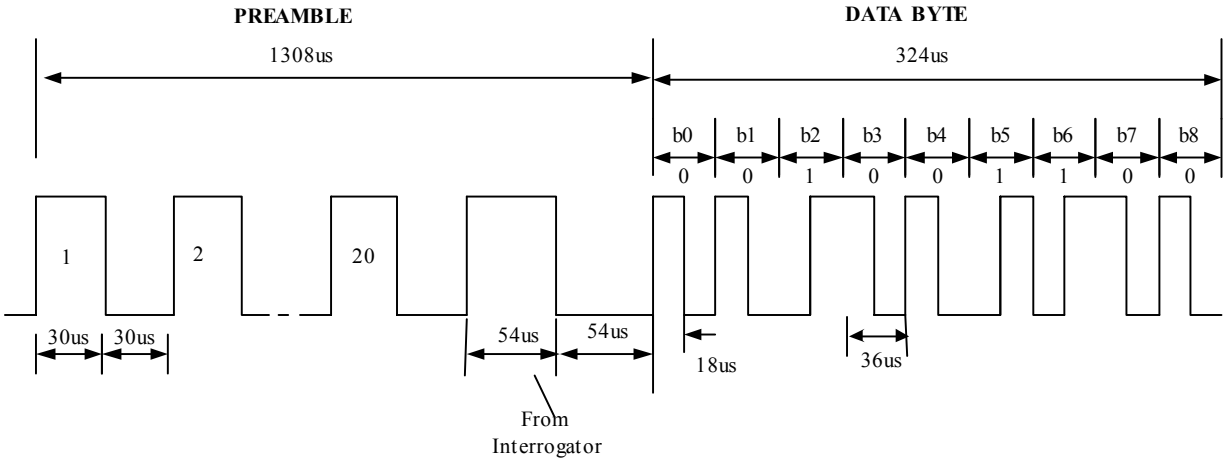

Figure 4 — Interrogator data communication and timing

4.4.4.2 Test procedure

The Interrogator shall transmit a convenient broadcast or point-to-point command. Each command sends a preamble of twenty-one (21) pulses with twenty (20) pulses with a 60 µs pulse period, 30 µs high and 30 µs low, followed by a final sync. pulse, 54 µs high, 54 µs low, that identifies the interrogator-to-tag communication direction.

An RF receiver with FM demodulator with receiver bandwidth and center frequency as defined in ISO/IEC 18000-7 Tag to Interrogator Link Parameters Tag:2a and Tag:1 and logic analyser shall be used for observing the correct coding and measuring the bit/symbol timing. The test set up is the same as that in Figure 3.

4.4.4.3 Measurement values and timing

Verify that the command preamble consists of

- 20 pulses of 60 µs ± 1,0 µs period, consisting of 30 µs ± 0,5 µs high and 30 µs ± 0,5 µs low,
- followed by one final sync. pulse of 54 µs ± 1,0 µs high and 54 µs ± 1,0 µs low.

All timing measurements shall be made at signal midpoints. A transmission is defined when the signal changes from 10 % to 90 % or 90 % to 10 %. In this case the midpoint is defined as time at 50 % of the signal level, see Figure 5.

© ISO/IEC 2005 – All rights reserved

Copyright International Organization for Standardization
Reproduced by IHS under license with ISO
No reproduction or networking permitted without license from IHS
Not for Resale

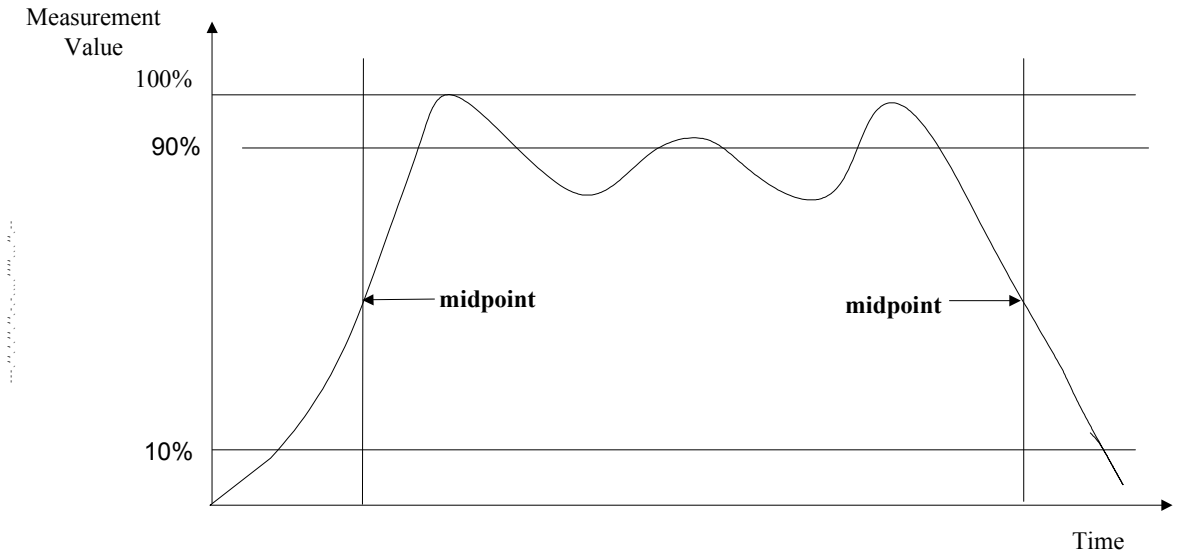

Figure 5 — Signal example with reference levels

4.4.4.4 Test report

The test report shall give the measured waveforms and timing parameters. The pass/fail condition is determined by the values in 4.4.4.3 and the values defined in ISO/IEC 18000-7 Interrogator to Tag Link Parameters for the forward link.

4.4.5 Data coding and reference timing

4.4.5.1 Test objective

The objective of this test is to verify that the interrogator transmission employs Manchester coding and that data timing is within defined limits. This test is designed to ensure that the interrogator transmits data at a rate of 27,7 kHz ± 1,0 kHz so that

- the transmission will be correctly interpreted as data by tags,
- the transmission will not be incorrectly interpreted as a wakeup signal at 31 kHz.

4.4.5.2 Test procedure

The Interrogator shall be set up with an interrogator ID set with the 16-bit bit pattern of ”1111111111111111” (all 1’s). The Interrogator shall then transmit a point-to-point sleep command, or equivalent, with a 32-bit Tag ID of bit pattern “111111….11111” (all 1’s). These patterns are intended to provide reasonably long and easily recognized bit patterns for testing.

An RF receiver with FM demodulator with receiver bandwidth and center frequency as defined in Table 41 in ISO/IEC 18000-7:2004 and logic analyser shall be used for observing the correct Manchester coding and measuring the bit/symbol timing. The test set-up is the same as that in Figure 3.

4.4.5.3 Measurement values and limits

Observe that Manchester coding is employed with a high-to-low or low-to-high transition in the center of each data bit position.

Copyright International Organization for Standardization
Reproduced by IHS under license with ISO
No reproduction or networking permitted without license from IHS
© ISO/IEC 2005 – All rights reserved
Not for Resale

The demodulated “high” and “low” signal shall each be measured for bit times in three separate and distinct portions of the transmitted message. Each “high” and “low” shall be 18 µs ± 0,5 µs, and the total bit (symbol) length shall be 36 µs ± 1,0 µs. All measurements shall be made at the signal midpoints.

Verify that the Interrogator inserts a “stop bit” (0) after every eight data bits.

4.4.5.4 Test report

The test report shall give the measured coding format and timing parameters. The pass/fail condition is determined by the values in 4.4.5.3 and the values defined in ISO/IEC 18000-7 Interrogator to Tag Link Parameters Int:8, Int:9 and Int:9a for Manchester coding and data timing for the forward link.

4.4.6 Receiver bandwidth

4.4.6.1 Test objective

The objective of this test is to verify that the interrogator has a minimum − 3 dB receiver bandwidth of 250 kHz. The following test requires that the interrogator be able to measure and communication the RSSI value.

Alternative means may be used to verify the receiver bandwidth if the interrogator does not provide the RSSI readout.

4.4.6.2 Test procedure

With a programmable signal generator and RF modulator, generate and transmit an ISO/IEC 18000-7 compliant RF message at 433,92 MHz and adjacent frequencies as described.

At each frequency, read the RSSI value provided by the interrogator.

a) The RSSI shall be verified to be linearly proportional to the power, otherwise a calibration of the test set-up needs to be done.

b) Next, develop an average RSSI value from five (5) RSSI measurements made at 433,92 MHz ± 10 kHz in 5 kHz steps (433,91 MHz to 433,93 MHz).

c) Then, read the RSSI values at two (2) points, 433,92 MHz ± 125 kHz (433,795 MHz and 434,045 MHz).

4.4.6.3 Measurement values

Verify that both RSSI values are within − 3 dB of the average RSSI developed in step b) of the test procedure.

4.4.6.4 Test report

The test report shall give the measured RSSI values and their relationship to the average RSSI in dB. The pass/fail condition is determined by the value in 4.4.6.3 and the values defined in ISO/IEC 18000-7 Interrogator to Tag Link Parameters Int:2 and Int :2a.

4.5 Functional test - tag

4.5.1 Operating frequency accuracy

4.5.1.1 Test objective

The objective of this test is to verify that the tag communication frequency is per ISO/IEC 18000-7 Tag to Interrogator Link Parameters.

--`,,```,,,,````-`-`,,`,,`,`,,`---
© ISO/IEC 2005 – All rights reserved
Copyright International Organization for Standardization
Reproduced by IHS under license with ISO
No reproduction or networking permitted without license from IHS
Not for Resale

4.5.1.2 Test procedure

Initialize for the test:

- The tag must have a suitable n-byte data pattern pre-stored in user memory.
- The tag must be in a sleep state, waiting for the wakeup command.

The interrogator shall issue a “collect with data” command with the test tag ID. The tag shall respond with transmission of the selected, pre-stored data. The tag response shall be analysed to determine the operating frequency using the calibrated antenna and modulation analyser.

4.5.1.3 Measurement values and limits

Verify that the interrogator communication frequency is within the frequency and accuracy limits of ISO/IEC 18000-7 Tag to Interrogator Link Parameters.

4.5.1.4 Test report

The test report shall give the measured frequency. The pass/fail condition is determined by the value in 4.5.1.3.

4.5.2 FSK modulation

4.5.2.1 Test objective

The objective of this test is to ensure that the tag frequency deviation is within acceptable operating limits of 50 kHz nominal.

4.5.2.2 Test procedure

Initialize for the test.

- The tag must have a suitable n-byte data pattern pre-stored in user memory.
- The tag must be in a sleep state, waiting for the wakeup command.

The interrogator shall issue a “collect with data” command with the test tag ID. The tag shall respond with transmission of the selected, pre-stored data. The tag response shall be analysed to determine the FSK frequency deviation using a calibrated antenna and modulation analyser.

4.5.2.3 Measurement values and limits

The peak frequency deviation from the carrier shall not exceed 55 kHz. The minimum frequency deviation from the carrier shall not be less than 40 kHz.

4.5.2.4 Test report

The test report shall give the measured modulation parameters. The pass/fail condition is determined by the value in 4.5.2.3 and the values defined in ISO/IEC 18000-7 Tag to Interrogator Link Parameters.

4.5.3 Message preamble format and timing

4.5.3.1 Test objective

The objective of this test is to verify the tag message preamble structure and timing.

© ISO/IEC 2005 – All rights reserved
Copyright International Organization for Standardization
Reproduced by IHS under license with ISO
No reproduction or networking permitted without license from IHS
Not for Resale

Each tag response includes a preamble of 1 296 µs duration, as shown in Figure 6, with the first byte (example) of a data packet. Pulse width in µs. Data byte transmitted significant bit first. Byte shown is code 0x64.

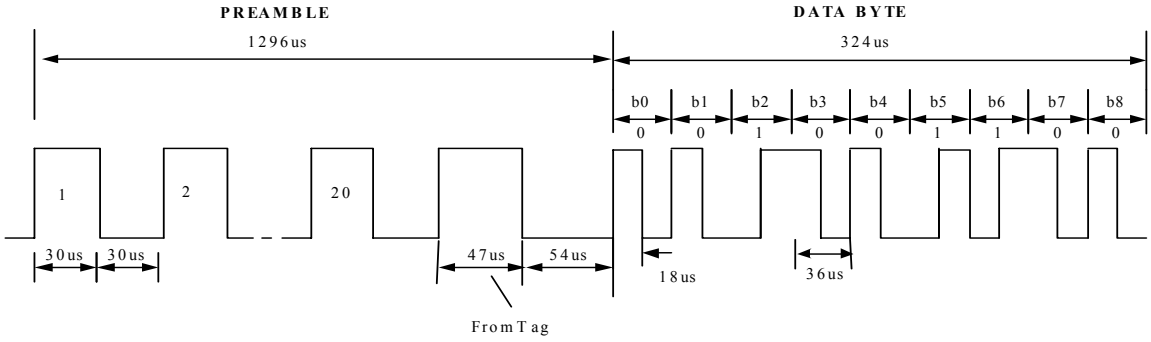

Figure 6 — Tag data communication and timing

4.5.3.2 Test procedure

Initialize for the test.

- The tag must have a suitable n-byte data pattern pre-stored in user memory.
- The tag must be in a sleep state, waiting for the wakeup command.

The Interrogator shall transmit a point-to-point “collect with data” command with the test tag ID. The tag shall respond with transmission of the selected, pre-stored data. The tag response shall be analysed to determine the message preamble and timing.

The tag response message sends a preamble of twenty-one (21) pulses with twenty (20) pulses having a 60 µs pulse period, 30 µs high and 30 µs low, followed by a final sync. pulse, 42 µs high, 54 µs low, that identifies the tag-to-interrogator communication direction.

An RF receiver with FM demodulator with receiver bandwidth and center frequency as defined in ISO/IEC 18000-7 Tag to Interrogator Link Parameters and logic analyser shall be used for observing the correct coding and measuring the bit/symbol timing. The test set-up is the same as that in Figure 3.

4.5.3.3 Measurement values and timing

Verify that the tag response preamble consists of

- 20 pulses of 60 µs ± 1,0 µs period, consisting of 30 µs ± 0,5 µs high and 30 µs ± 0,5 µs low,
- followed by one final sync. pulse of 42 µs ± 1,0 µs high and 54 µs ± 1,0 µs low.

All timing measurements shall be made at signal midpoints.

4.5.3.4 Test report

The test report shall give the measured modulation parameters. The pass/fail condition is determined by the values in 4.5.3.3 and the values defined in ISO/IEC 18000-7 Tag to Interrogator Link Parameters for the reverse link Tag:11c and Tag:11d.

© ISO/IEC 2005 – All rights reserved

Copyright International Organization for Standardization
Reproduced by IHS under license with ISO
No reproduction or networking permitted without license from IHS
Not for Resale

4.5.4 Data coding and reference timing

4.5.4.1 Test objective

The objective of this test is to verify that the interrogator transmission employs Manchester coding and that data timing is within defined limits.

4.5.4.2 Test procedure

Initialize for the test.

- The tag must have a suitable n-byte data pattern pre-stored in user memory.
- The tag must be in a sleep state, waiting for the wakeup command.

The interrogator shall issue a point-to-point “collect with data” command with the test tag ID. The tag shall respond with transmission of the selected, pre-stored data. The tag response shall be analysed to determine the data coding and data order.

An RF receiver with FM demodulator with receiver bandwidth and center frequency as defined in ISO/IEC 18000-7 Tag to Interrogator Link Parameters and logic analyser shall be used for observing the correct Manchester coding and measuring the bit/symbol timing. The test set-up is the same as that in Figure 3.

4.5.4.3 Measurement values and limits

Observe that Manchester coding is employed with a high-to-low or low-to-high transition in the center of each data bit position.

The demodulated “high” and “low” signals shall each be measured for bit times in three separate and distinct portions of the transmitted message. Each “high” and “low” shall be 18 µs $\pm$ 0,5 µs, and the total bit (symbol) length shall be 36 µs $\pm$ 1,0 µs. All measurements are made at signal midpoints.

Verify that the tag inserts a “stop bit” (0) after every eight data bits.

4.5.4.4 Test report

The test report shall give the measured coding and timing parameters. The pass/fail condition is determined by the value in 5.3.3.4 and the values defined in ISO/IEC 18000-7 Tag to Interrogator Link Parameters for the reverse link Tag:8.

4.5.5 Wakeup signal response

4.5.5.1 Test objective

The objective of this test is to verify that the tag will wake up in response to a correct interrogator wakeup signal.

4.5.5.2 Test procedure

Initialize for the test.

- The tag must have a suitable n-byte data pattern pre-stored in user memory.
- The tag must be in a sleep state, waiting for the wakeup command.

The interrogator shall issue a “collect with data” command with the test tag ID. This command includes the tag wakeup signal. The tag shall respond with transmission of the selected, pre-stored data.

© ISO/IEC 2005 – All rights reserved
Copyright International Organization for Standardization
Reproduced by IHS under license with ISO
No reproduction or networking permitted without license from IHS
Not for Resale

An RF receiver with FM demodulator with receiver bandwidth and center frequency as defined in ISO/IEC 18000-7 Tag to Interrogator Link Parameters and logic analyser shall be used for observing that the tag responds correctly after receiving a correct wakeup signal. The test set-up is the same as that in Figure 3.

4.5.5.3 Measurement values and timing

Verify that the tag does respond to a legitimate command after receiving a wakeup signal.

4.5.5.4 Test report

The test report shall give the measured coding and timing parameters. The pass/fail condition is determined by 4.5.5.3 and the values defined in ISO/IEC 18000-7 Tag to Interrogator Link Parameters for the reverse link.

© ISO/IEC 2005 – All rights reserved

Copyright International Organization for Standardization
Reproduced by IHS under license with ISO
No reproduction or networking permitted without license from IHS
Not for Resale

Bibliography

[1] ISO/IEC 18000-1, *Information technology — Radio frequency identification for item management — Part 1: Reference architecture and definition of parameters to be standardized*

[2] ISO/IEC 15962, *Information technology — Radio frequency identification (RFID) for item management — Data protocol: data encoding rules and logical memory functions*

--`,,```,,,,````-`-`,,`,,`,`,,`---

© ISO/IEC 2005 – All rights reserved

Copyright International Organization for Standardization
Reproduced by IHS under license with ISO
No reproduction or networking permitted without license from IHS

Not for Resale

--`,,```,,,,````-`-`,,`,,`,`,,`---

Copyright International Organization for Standardization
Reproduced by IHS under license with ISO
No reproduction or networking permitted without license from IHS

Not for Resale

ICS 35.040

Price based on 14 pages

--`,,```,,,,````-`-`,,`,,`,`,,`---

© ISO/IEC 2005 – All rights reserved
Copyright International Organization for Standardization
Reproduced by IHS under license with ISO
No reproduction or networking permitted without license from IHS
Not for Resale