TECHNICAL REPORT

ISO/IEC TR 18047-6

Second edition
2008-12-15

Information technology — Radio frequency identification device conformance test methods —

Part 6: Test methods for air interface communications at 860 MHz to 960 MHz

Technologies de l'information — Méthodes d'essai de conformité du dispositif d'identification de radiofréquence —

Partie 6: Méthodes d'essai pour des communications d'une interface d'air à 860 MHz et jusqu'à 960 MHz

Reference number
ISO/IEC TR 18047-6:2008(E)

© ISO/IEC 2008

Copyright International Organization for Standardization
Provided by IHS under license with ISO
No reproduction or networking permitted without license from IHS

Not for Resale

PDF disclaimer

This PDF file may contain embedded typefaces. In accordance with Adobe's licensing policy, this file may be printed or viewed but shall not be edited unless the typefaces which are embedded are licensed to and installed on the computer performing the editing. In downloading this file, parties accept therein the responsibility of not infringing Adobe's licensing policy. The ISO Central Secretariat accepts no liability in this area.

Adobe is a trademark of Adobe Systems Incorporated.

Details of the software products used to create this PDF file can be found in the General Info relative to the file; the PDF-creation parameters were optimized for printing. Every care has been taken to ensure that the file is suitable for use by ISO member bodies. In the unlikely event that a problem relating to it is found, please inform the Central Secretariat at the address given below.



COPYRIGHT PROTECTED DOCUMENT

© ISO/IEC 2008

All rights reserved. Unless otherwise specified, no part of this publication may be reproduced or utilized in any form or by any means, electronic or mechanical, including photocopying and microfilm, without permission in writing from either ISO at the address below or ISO's member body in the country of the requester.

ISO copyright office
Case postale 56 • CH-1211 Geneva 20
Tel. + 41 22 749 01 11
Fax + 41 22 749 09 47
E-mail copyright@iso.org
Web www.iso.org

Published in Switzerland

--`,,```,,,,````-`-`,,`,,`,`,,`---

::
Copyright International Organization for Standardization
Provided by IHS under license with ISO
No reproduction or networking permitted without license from IHS

© ISO/IEC 2008 – All rights reserved

Not for Resale

Contents

Page

Foreword v

Introduction vi

1 Scope 1

2 Normative references 1

3 Terms, definitions, symbols and abbreviated terms 2
3.1 Terms and definitions 2
3.2 Symbols 2
3.3 Abbreviated terms 2
3.4 Default conditions applicable to the test methods 3
3.4.1 Test environment 3
3.4.2 Pre-conditioning 3
3.4.3 Default tolerance 3
3.4.4 Noise floor at test location 3
3.4.5 Total measurement uncertainty 3

4 Setup of test equipment 3
4.1 Setup of test equipment for interrogator tests 3
4.1.1 General 3
4.1.2 Sense antenna 4
4.1.3 Test apparatus and test circuits for ISO/IEC 18000-6 Type A and B interrogator 4
4.1.4 Test apparatus and test circuits for ISO/IEC 18000-6 Type C interrogator 5
4.2 Setup of test equipment for tag tests 5
4.2.1 General 5
4.2.2 Test apparatus and test circuits for ISO/IEC 18000-6 Type A and B tags 5
4.2.3 Test apparatus and test circuits for ISO/IEC 18000-6 Type C tags 7

5 Conformance tests for ISO/IEC 18000-6 Type A 7
5.1 Functional tests of interrogator 7
5.1.1 Interrogator modulation test 7
5.1.2 Interrogator demodulation and turn around time 8
5.2 Functional tests of tag 9
5.2.1 Tag demodulation and turn around time 9
5.2.2 Tag backscatter 10
5.2.3 Tag response time 11
5.2.4 Tag bit rate 11
5.2.5 Tag state storage time 12

6 Conformance tests for ISO/IEC 18000-6 Type B 13
6.1 Functional tests of interrogator 13
6.1.1 Interrogator modulation test 13
6.1.2 Interrogator demodulation and turn around time 13
6.2 Functional tests of tag 14
6.2.1 Tag demodulation and turn around time 14
6.2.2 Tag backscatter 15
6.2.3 Tag response time 16
6.2.4 Tag bit rate 17
6.2.5 Tag state storage time 18

7 Conformance tests for ISO/IEC 18000-6 Type C 18
7.1 Tag functional tests 18
7.1.1 Tag Frequency range 18
7.1.2 Tag demodulation capability 19

© ISO/IEC 2008 – All rights reserved

Copyright International Organization for Standardization
Provided by IHS under license with ISO
No reproduction or networking permitted without license from IHS
Not for Resale

7.1.3 Tag duty cycle **20**
7.1.4 Tag preamble **22**
7.1.5 Tag link frequency tolerance and variation **24**
7.1.6 Tag link timing T1 ..... **25**
7.1.7 Tag link timing T2 ..... **26**
7.1.8 Tag state diagram **28**
7.2 Interrogator functional tests **29**
7.2.1 Interrogator data encoding **29**
7.2.2 Interrogator RF envelope parameters **31**
7.2.3 Interrogator RF power-up and power-down parameters **32**
7.2.4 Interrogator preamble parameters **33**
7.2.5 Interrogator link timing T2 ..... **34**
7.2.6 Interrogator link timing T3 ..... **35**
7.2.7 Interrogator link timing T4 ..... **36**

Annex A (informative) **Test measurement site** **38**

Annex B (normative) **Command coding for conformance tests for the different types of ISO/IEC 18000-6** **49**

Annex C (normative) **State-transition tables** **51**

Annex D (normative) **Technical performance of the digital oscilloscope** **52**

Annex E (normative) **Technical performance of the spectrum analyser** **53**

Annex F (normative) **Tag emulator** **54**

Annex G (informative) **Measurement examples** **56**

Annex H (normative) **Technical performance of the vector signal generator** **57**

Annex I (normative) **Reference antenna** **58**

Bibliography **59**

© ISO/IEC 2008 – All rights reserved
Copyright International Organization for Standardization
Provided by IHS under license with ISO
No reproduction or networking permitted without license from IHS
Not for Resale

Foreword

ISO (the International Organization for Standardization) and IEC (the International Electrotechnical Commission) form the specialized system for worldwide standardization. National bodies that are members of ISO or IEC participate in the development of International Standards through technical committees established by the respective organization to deal with particular fields of technical activity. ISO and IEC technical committees collaborate in fields of mutual interest. Other international organizations, governmental and non-governmental, in liaison with ISO and IEC, also take part in the work. In the field of information technology, ISO and IEC have established a joint technical committee, ISO/IEC JTC 1.

International Standards are drafted in accordance with the rules given in the ISO/IEC Directives, Part 2.

The main task of the joint technical committee is to prepare International Standards. Draft International Standards adopted by the joint technical committee are circulated to national bodies for voting. Publication as an International Standard requires approval by at least 75 % of the national bodies casting a vote.

In exceptional circumstances, the joint technical committee may propose the publication of a Technical Report of one of the following types:

— type 1, when the required support cannot be obtained for the publication of an International Standard, despite repeated efforts;

— type 2, when the subject is still under technical development or where for any other reason there is the future but not immediate possibility of an agreement on an International Standard;

— type 3, when the joint technical committee has collected data of a different kind from that which is normally published as an International Standard ("state of the art", for example).

Technical Reports of types 1 and 2 are subject to review within three years of publication, to decide whether they can be transformed into International Standards. Technical Reports of type 3 do not necessarily have to be reviewed until the data they provide are considered to be no longer valid or useful.

Attention is drawn to the possibility that some of the elements of this document may be the subject of patent rights. ISO and IEC shall not be held responsible for identifying any or all such patent rights.

ISO/IEC TR 18047-6, which is a Technical Report of type 3, was prepared by Joint Technical Committee ISO/IEC JTC 1, *Information technology*, Subcommittee SC 31, *Automatic identification and data capture techniques*.

This second edition cancels and replaces the first edition (ISO/IEC TR 18047-6:2006), which has been technically revised.

ISO/IEC TR 18047 consists of the following parts, under the general title *Information technology — Radio frequency identification device conformance test methods*:

— *Part 2: Test methods for air interface communications below 135 kHz*

— *Part 3: Test methods for air interface communications at 13,56 MHz*

— *Part 4: Test methods for air interface communications at 2,45 GHz*

— *Part 6: Test methods for air interface communications at 860 MHz to 960 MHz*

— *Part 7: Test methods for active air interface communications at 433 MHz*

--`,,```,,,,````-`-`,,`,,`,`,,`---
© ISO/IEC 2008 – All rights reserved
Copyright International Organization for Standardization
Provided by IHS under license with ISO
No reproduction or networking permitted without license from IHS
Not for Resale

Introduction

ISO/IEC 18000 defines the air interfaces for radio frequency identification (RFID) devices used in item management applications. ISO/IEC 18000-6 defines the air interface for these devices operating at frequencies from 860 MHz to 960 MHz.

ISO/IEC TR 18047 provides test methods for conformance with the various parts of ISO/IEC 18000.

Each part of ISO/IEC TR 18047 contains all measurements required to be made on a product in order to establish whether it conforms to the corresponding part of ISO/IEC 18000. For this part of ISO/IEC TR 18047, each interrogator needs to be assessed for operation with both types A and B, while each tag is only required to support at least one of the types A or B or C.

NOTE Measurement of tag and interrogator performance is covered by ISO/IEC 18046.

© ISO/IEC 2008 – All rights reserved
Copyright International Organization for Standardization
Provided by IHS under license with ISO
No reproduction or networking permitted without license from IHS
Not for Resale

Information technology — Radio frequency identification device conformance test methods —

Part 6: Test methods for air interface communications at 860 MHz to 960 MHz

1 Scope

This part of ISO/IEC TR 18047 defines test methods for determining the conformance of radio frequency identification (RFID) devices (tags and interrogators) for item management with the specifications given in ISO/IEC 18000-6, but does not apply to the testing of conformity with regulatory or similar requirements.

The test methods require only that the mandatory functions, and any optional functions which are implemented, be verified. This may, in appropriate circumstances, be supplemented by further, application-specific functionality criteria that are not available in the general case.

The interrogator and tag conformance parameters in this part of ISO/IEC TR 18047 are the following:

- type-specific conformance parameters including nominal values and tolerances;
- parameters that apply directly affecting system functionality and inter-operability.

The following are not included in this part of ISO/IEC TR 18047:

- parameters that are already included in regulatory test requirements;
- high-level data encoding conformance test parameters (these are specified in ISO/IEC 15962).

Unless otherwise specified, the tests in this part of ISO/IEC TR 18047 are to be applied exclusively to RFID tags and interrogators defined in ISO/IEC 18000-6.

Clause 5 describes all necessary conformance tests.

2 Normative references

The following referenced documents are indispensable for the application of this document. For dated references, only the edition cited applies. For undated references, the latest edition of the referenced document (including any amendments) applies.

ISO/IEC 18000-6, *Information technology — Radio frequency identification for item management — Part 6: Parameters for air interface communications at 860 MHz to 960 MHz*

ISO/IEC 19762 (all parts), *Information technology — Automatic identification and data capture (AIDC) techniques — Harmonized vocabulary*

ISBN 92-67-10188-9, 1993, *ISO Guide to the expression of uncertainty in measurement*

© ISO/IEC 2008 All rights reserved

Copyright International Organization for Standardization
Provided by IHS under license with ISO
No reproduction or networking permitted without license from IHS
Not for Resale

3 Terms, definitions, symbols and abbreviated terms

3.1 Terms and definitions

For the purposes of this document, the terms and definitions given in ISO/IEC 19762 apply.

3.2 Symbols

For the purposes of this document, the symbols given in ISO/IEC 19762 and the following apply.

D Modulation depth of data coding pulse

d1 Distance between the interrogator and test antenna

d2 Distance between test antenna and EUT tag

ds Distance between the interrogator antenna and sense antenna

dT,IA Interrogator antenna to tag distance

dT,MA Measurement antenna to tag distance

dTE Distance between the interrogator antenna and tag emulator

G1 Interrogator antenna gain

GIA Gain of interrogator antenna

GMA Gain of measurement antenna

K Calibration factor

L Maximum interrogator antenna dimension

M Modulation index

PI Delivered power at the carrier frequency

PM Measured power at the carrier frequency

Tf Fall time

Tr Rise time

3.3 Abbreviated terms

For the purposes of this document, the abbreviated terms given in ISO/IEC 19762 and the following apply.

DUT Device under test

EUT Equipment under test

RCS Radar cross-section

∆RCS Change in radar cross-section

RBW Resolution bandwidth

VBW Video bandwidth

© ISO/IEC 2008 – All rights reserved
Copyright International Organization for Standardization
Provided by IHS under license with ISO
No reproduction or networking permitted without license from IHS
Not for Resale

3.4 Default conditions applicable to the test methods

3.4.1 Test environment

Unless otherwise specified, testing shall take place in an environment of temperature 23 °C ± 3 °C and of non-condensing humidity from 40 % to 60 %.

3.4.2 Pre-conditioning

Where pre-conditioning is required by the test method, the identification tags to be tested shall be conditioned to the test environment for an appropriate time period, which shall be recorded.

3.4.3 Default tolerance

Unless otherwise specified, a default tolerance of ± 5 % shall be applied to the quantity values given to specify the characteristics of the test equipment (e.g. linear dimensions) and the test method procedures (e.g. test equipment adjustments).

3.4.4 Noise floor at test location

Noise floor at test location shall be measured with the spectrum analyser in the same conditions as for the measurement of the EUT, with a span of 10 MHz: RBW, VBW and antenna.

The spectrum analyser shall be configured in acquisition for at least 1 minute.

The maximum of the measured amplitude shall be 20 dB below the value of the amplitude of the measured tag backscatter operating at minimum power ($P_{I,min}$, see clause 5.2.2.2), and the tag placed at 10 λ from the measurement antenna.

Special attention has to be given to spurious emissions, e.g., insufficiently shielded computer monitors. The electromagnetic test conditions of the measurements shall be checked by performing the measurements with and without a tag in the field.

3.4.5 Total measurement uncertainty

The total measurement uncertainty for each quantity determined by these test methods shall be stated in the test report.

NOTE Basic information is given in *ISO Guide to the expression of uncertainty in measurement*, ISBN 92-67-10188-9, 1993.

4 Setup of test equipment

4.1 Setup of test equipment for interrogator tests

4.1.1 General

The EUT shall be an interrogator including an antenna.

All conformance measurements and setups shall be done in an anechoic chamber as defined in Annex A.

Dependent of the regulatory requirements all measurements shall be done at one of the test frequencies in Table 1.

© ISO/IEC 2008 All rights reserved

Copyright International Organization for Standardization
Provided by IHS under license with ISO
No reproduction or networking permitted without license from IHS
Not for Resale

Table 1 — Test frequencies

Test carrier frequency	Comment
866 MHz	Recommended for tests under European regulations
910 MHz	Recommended for tests under Korean or US regulations
922 MHz	Recommended for tests under Australian regulations
953 MHz	Recommended for tests under Japan regulations

NOTE With the test frequencies specified in Table 1 all frequencies of the entire band from 860 MHz to 960 MHz are within ± 2,5 % of one of the test frequencies.

4.1.2 Sense antenna

Where applicable, tests shall be carried out using a sense antenna, which shall be a substantially non-reactive non-radiating load of 50 Ω equipped with an antenna connector. The Voltage Standing Wave Ratio (VSWR) at the 50 Ω connector shall not be greater than 1,2 : 1 over the frequency range of the measurement.

4.1.3 Test apparatus and test circuits for ISO/IEC 18000-6 Type A and B interrogator

4.1.3.1 Interrogator modulation test setup

For this test the sense antenna shall always be placed and orientated for optimum field strength reception in the direction of the major power radiation of the interrogator antenna according Figure 1 at a distance d_S which is defined in clause 5.1.1.2.

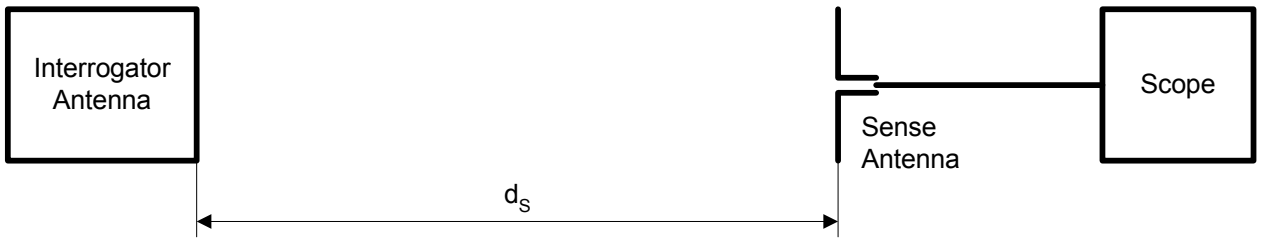

Figure 1 — Interrogator modulation test setup

4.1.3.2 Interrogator demodulation and turn around time test setup

For this test the tag emulator as defined in Annexe F shall be placed and orientated for optimum field strength reception in the direction of the major power radiation of the interrogator according Figure 2 at a distance d_{TE}, which is defined in clause 5.1.2.2.

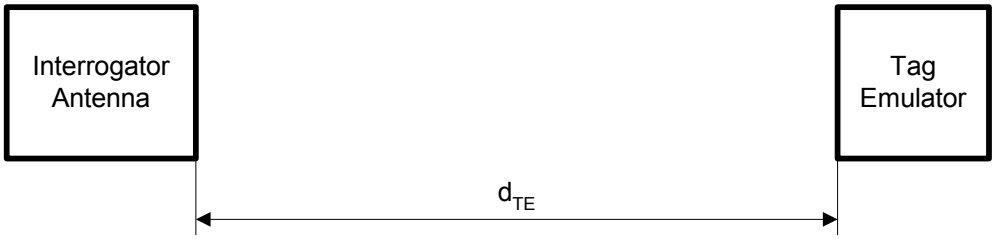

Figure 2 — Interrogator demodulation and turn around test setup

Copyright International Organization for Standardization
Provided by IHS under license with ISO
No reproduction or networking permitted without license from IHS
© ISO/IEC 2008 – All rights reserved
Not for Resale

4.1.4 Test apparatus and test circuits for ISO/IEC 18000-6 Type C interrogator

The EUT shall be an interrogator including an antenna.

For this test, the sense antenna shall always be placed according to Figure 3. The distance between an interrogator antenna and a sense antenna shall be $\mathbf{d_1}$. The sense antenna shall be placed in the optimum orientation so as to receive the highest possible power level radiated by the interrogator antenna.

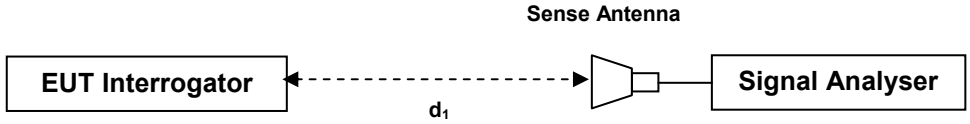

Figure 3 — Interrogator test setup

For some interrogator tests a tag emulator as defined in Annex F shall be used, the tag emulator shall be placed and orientated for optimum field strength reception in the direction of the major power radiation of the interrogator.

4.2 Setup of test equipment for tag tests

4.2.1 General

The EUT shall be a tag including all means in order to be capable to communicate with an interrogator.

When tests require use of an interrogator this shall be an interrogator including antenna that conforms to ISO/IEC 18000-6 according to the methods defined in this Type of ISO/IEC TR 18047, or it shall be a signal generator including antenna. Furthermore, the interrogator shall support the minimum tag response to interrogator command turn around time.

The interrogator antenna shall fulfil the specification of Table 2.

Table 2 — Interrogator antenna requirements for tag tests

Symbol	Parameter	Minimum Value	Maximum Value
L	Maximum Interrogator antenna dimension	0,1 m	$\sqrt{\frac{\lambda\, d_T}{2}}$
G_I	Interrogator antenna gain	2 dBi	8 dBi

All conformance measurements and setups shall be done in an anechoic chamber as defined in Annex A.

Dependent of the regulatory requirements all measurements shall be done at either of the test frequencies in Table 1.

4.2.2 Test apparatus and test circuits for ISO/IEC 18000-6 Type A and B tags

4.2.2.1 Tag demodulation and turn around time test setup

For this test the tag shall be placed and oriented for optimum field strength reception in the direction of the major power radiation of the interrogator in a distance

$$d_{T,IA} > \frac{2L^2}{\lambda},\ d_{T,MA} > \frac{2L^2}{\lambda}$$

with L being the maximum dimension of the interrogator antenna according Figure 4.

© ISO/IEC 2008 All rights reserved

Copyright International Organization for Standardization
Provided by IHS under license with ISO
No reproduction or networking permitted without license from IHS
Not for Resale

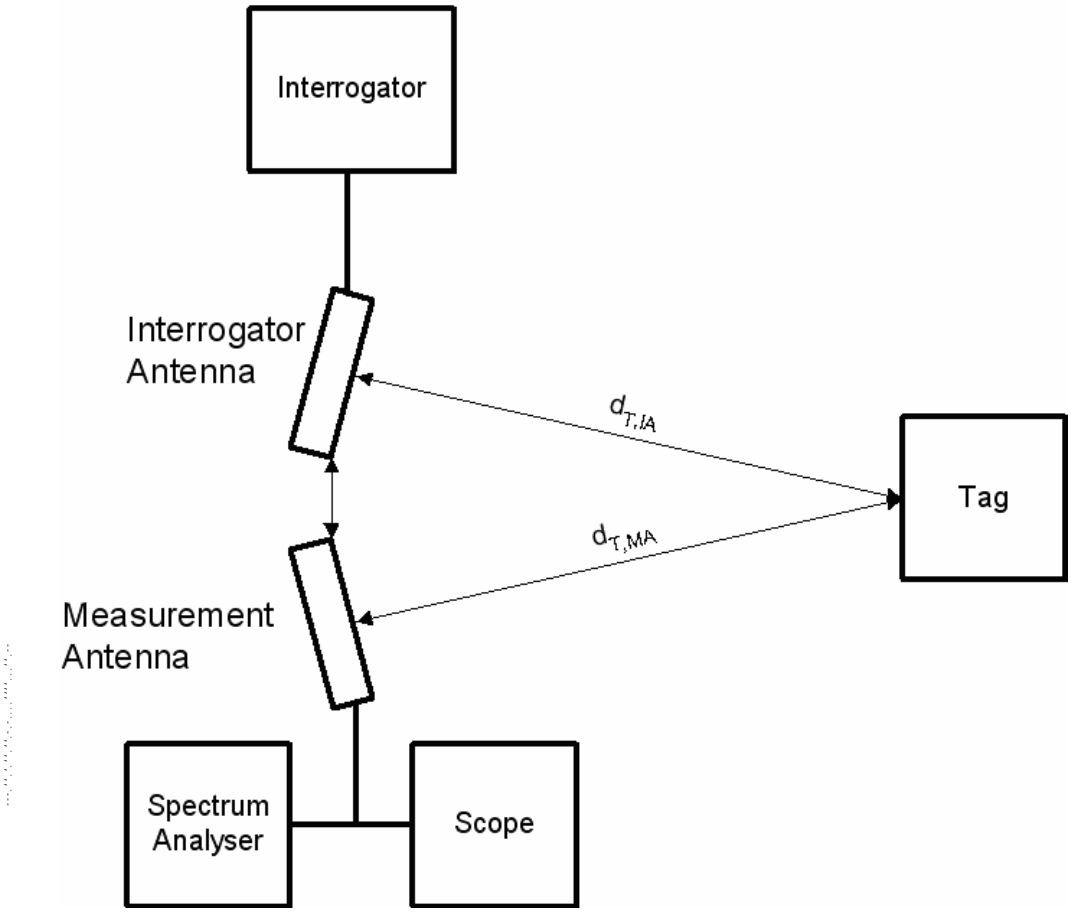

Figure 4 — Tag demodulation test setup

4.2.2.2 Tag backscatter test setup

For this test the test interrogator antenna setup, where the interrogator may alternately also be realized with a vector signal generator according Annex H, shall consist of a set of two mechanically assembled antennas specifically designed to reduce the signal coupling between each other. One shall be used as interrogator antenna while the second, shall be used as measurement antenna and shall be connected either to a spectrum analyser or to an oscilloscope as specified according to Annex D.

The main lobe axis of these two antennas cross each other with an angle value that shall be lower than 15°. The tag under test shall be placed at this focal point and oriented for optimum field strength reception.

The distances between the tag and the antennas are $d_{T,IA}$ and $d_{T,MA}$ respectively (see Figure 4).

The tag backscatter test setup parameters are defined in Table 3.

Table 3 — Tag backscatter setup parameters

Symbol	Name	Description
$d_{T,IA}$	Interrogator antenna to tag distance	
$d_{T,MA}$	Measurement antenna to tag distance	
G_{IA}	Gain of interrogator antenna	The maximum 3 dB beam width shall be ± 35°
G_{MA}	Gain of measurement antenna	The maximum 3 dB beam width shall be ± 35°

© ISO/IEC 2008 – All rights reserved
Copyright International Organization for Standardization
Provided by IHS under license with ISO
No reproduction or networking permitted without license from IHS
Not for Resale

The residual signal coupling between the two antennas shall be measured in free space, and anechoic or similar RF absorbing material shall be used between two antennas to increase isolation up to 45 dB in the value in free space is not better than 45 dB.

L shall be the greater value of the Interrogator and Measurement Antenna.

The spectrum analyser shall be to a RBW of 30 kHz, a VBW of 100 kHz. The minimum span should be at least 1 MHz or 8 times the data rate, whichever is greater. The frequency analyser shall use max peak detection.

For this test the tag shall be setup to provide only one modulation frequency. Therefore the tag shall except for the preamble, only reply with a bit stream of zero data bits.

4.2.2.3 Tag response time

The setup for this test shall be as described in chapter 4.2.2.1.

4.2.2.4 Tag bit rate accuracy test setup

The setup for this test shall be as described in chapter 4.2.2.1.

4.2.2.5 Tag state storage time test setup

The setup for this test shall be as described in chapter 4.2.2.1.

4.2.3 Test apparatus and test circuits for ISO/IEC 18000-6 Type C tags

The EUT shall be a tag including all means in order to be capable to communicate with an interrogator.

For this test the tag shall be placed and oriented for optimum field strength reception in the direction of the major power radiation of the interrogator in a distance

$$d_{T,IA} > \frac{2L^2}{\lambda},\ d_{T,MA} > \frac{2L^2}{\lambda}$$

with L being the maximum dimension of the interrogator antenna according to Figure 4.

The test antenna must be linearly polarized and with VSWR <1:1.5.

5 Conformance tests for ISO/IEC 18000-6 Type A

5.1 Functional tests of interrogator

5.1.1 Interrogator modulation test

5.1.1.1 Test objective

The objective of this test is to verify that the interrogator provides the appropriate modulation waveform required for operation of tags.

5.1.1.2 Test procedure

The interrogator shall transmit an **Init_round_all** command at the maximum power allowed under the regulations of the selected carrier frequency for testing.

© ISO/IEC 2008 – All rights reserved
Copyright International Organization for Standardization
Provided by IHS under license with ISO
No reproduction or networking permitted without license from IHS
Not for Resale

In case the interrogator is intended for operation of non-overlapping RF bands, then this test shall be done for each RF band.

Measurements shall be done with a sense antenna positioned at a distance d_S = 3 λ and d_S = 10 λ and for each operation mode.

A digital oscilloscope as specified in Annex D and the sense antenna shall be used to record the waveform provided by the interrogator.

5.1.1.3 Test report

The test report shall give the measured values of the parameters according Table 4 The pass/fail condition is determined whether the measured values are within the requirements as specified in ISO/IEC 18000-6. Furthermore, the EUT and the sense antenna orientation and position, as well as the used interrogator output power and the used operation frequency shall be recorded.

Table 4 — Measurements to be made

Parameter	Conditions
D	Default modulation operation mode
Tapr	Default modulation operation mode
Tapf	Default modulation operation mode

5.1.2 Interrogator demodulation and turn around time

5.1.2.1 Test objective

The objectives of this test are to verify whether the interrogator is capable of

— demodulating signals from the tags,

— receiving the data transmitted by the tag emulator after the minimum specified turn-around time.

5.1.2.2 Test procedure

The interrogator shall transmit an **Init_round_all** command (see clause B.1.1) at the maximum power allowed under the regulations of the selected carrier frequency for testing.

After the command provided by the interrogator has been sent and after the minimum turn around time, a tag emulator as specified in Annex F shall transmit a typical response to the **Init_round_all** command at a minimum ΔRCS specified in ISO/IEC 18000-6 Tag: 7d. The tag emulator does not need to demodulate the command, but shall only detect its end to respond after the minimum turn-around time.

When the interrogator is intended for operation of non-overlapping RF bands this test shall be done for each RF band.

Measurements shall be done with a tag emulator positioned at d_{TE} = 10 λ for both the minimum and maximum tag response data rate, i.e. the turn around time from interrogator command to tag response.

In case the interrogator is design for shorter communication distances, then the distance d_{TE} may be decreased and the actual used value shall be mentioned in test report.

The interrogator (digital) demodulator shall accept the tag response including verification of the CRC.

--`,,```,,,,````-`-`,,`,,`,`,,`---

© ISO/IEC 2008 – All rights reserved
Copyright International Organization for Standardization
Provided by IHS under license with ISO
No reproduction or networking permitted without license from IHS
Not for Resale

5.1.2.3 Test report

The test report shall contain the tag emulator distance to the interrogator and the ΔRCS value setup in the tag emulator. Furthermore, also the set up turnaround time from the tag emulator, the EUT and the tag emulator orientation and position, as well as the used interrogator output power and the used operation frequency shall be recorded.

5.2 Functional tests of tag

5.2.1 Tag demodulation and turn around time

5.2.1.1 Test objective

The objectives of this test are to verify whether the tag is capable of

— demodulating signals from the interrogator,

— receiving the data transmitted by the interrogator after the minimum specified response to command turn-around time.

5.2.1.2 Test procedure

The test interrogator shall transmit an **Init_round_all** (see clause B.1.1) command.

The tag (EUT) shall receive the command provided by the interrogator and shall provide an appropriate response. After complete reception of the tag response the interrogator shall generate a **Next_slot** command within the minimum specified turn around time between tag response and interrogator command.

Measurements shall be done by verifying that the tag detected the command appropriately by means of evaluation of its response. Measurements shall be done at $P_I = 1{,}2\ P_{I,min}$ or the minimum tag activation power density $S_{T,min}$ for each operation type of the interrogator command data rate.

The power density $S_{T,min}$ is related to the test interrogator radiated power $P_{I,min}$ as following:

$$P_{I,min} = 4\pi d_{T,IA}^2 S_{T,min} \frac{1}{G_{IA}}$$

In case the interrogator is design for shorter communication distances, then the distance d_{TE} may be decreased and the actual used value shall be mentioned in test report.

The test shall be seen as successful, when it could be shown that the tag sent the correct response for both commands including verification of the CRC.

The interrogator waveform shall contain the setups of the waveform for the respective types according to Table 5.

Table 5 — Setups of waveforms

Setup number	Setup description	Parameter setting
A-1	Minimum modulation depth	D = Dmin
A-2	Medium modulation depth	D = (Dmax + Dmin)/2
A-3	Maximum modulation depth	D = Dmax

--`,,```,,,,````-`-`,,`,,`,`,,`---

© ISO/IEC 2008 – All rights reserved

Copyright International Organization for Standardization
Provided by IHS under license with ISO
No reproduction or networking permitted without license from IHS
Not for Resale

5.2.1.3 Test report

The test result shall be recorded as successful or unsuccessful. The test report shall contain the tag distance to the interrogator. Furthermore, also the set up turn around time from the tag response to interrogator command, the EUT and the interrogator orientation and position, as well as the used interrogator output power and the used operation frequency shall be recorded.

5.2.2 Tag backscatter

5.2.2.1 Test objective

The objective of this test is to verify that the tag provides the appropriate modulation waveform and backscatter strength required to be successfully detected and received by the interrogator.

Measurements are carried out in an anechoic chamber in bistatic antennas configuration as shown in figure 4, I and Q signals are measured with and without the tag present in the anechoic chamber that allows measurement of the difference of re-radiated power issued only from the tag, and thus find the ΔRCS.

5.2.2.2 Test procedure

Measurements shall be done with a tag positioned $d_{T,IA}$ = 1m and $d_{T,MA}$ = 1m away from the interrogator antenna at a power $P_{I,min}$.

Where $P_{I,min}$ is the minimum power allowing the EUT tag activation.

A vector signal analyser as specified in Annex E shall be used to record the quadrature baseband voltages I and Q versus time.

Test setup shall be calibrated to determine antennas gain and mismatch and also cables loss, to be taking into account for all power measurements.

Delta radar cross-section measurement procedure:

1) The signal generator shall be set to the required test frequency.

2) The signal generator amplitude shall be set to a value that allows the EUT tag activation.

3) Using the power meter determine the power at the entrance of the transmit antenna **Pe**, which is defined as the average power measured over at least 100μs period during the continues waves signal following the signal generator command.

4) The signal analyser shall be set to measure the quadrature baseband I and Q voltages versus time, with a sampling rate of at least 5Msps.

5) Without the tag placed in the anechoic chamber, the signal analyser shall be set to capture at least 100μs period of I and Q samples at the continues wave just following the signal generator command, determine the Ic and Qc voltages levels.

6) With the tag now placed in the anechoic chamber, the analyser shall be set to capture I and Q voltage samples at least during 10 symbols of tag reply, determine the I and Q voltages corresponding to the two modulation states of tag ($I_{r,0}/Q_{r,0}$) and ($I_{r,1}/Q_{r,1}$).

7) Measure the difference of power issue from the EUT tag backscattering according to the equation below:

$$\Delta P_{tag}(rms) = \frac{1}{100} \cdot \left| \left((I_{r,1} - I_c)^2 + (Q_{r,1} - Q_c)^2 \right) - \left((I_{r,0} - I_c)^2 + (Q_{r,0} - Q_c)^2 \right) \right|$$

--`,,```,,,,````-`-`,,`,,`,`,,`---
© ISO/IEC 2008 – All rights reserved
Copyright International Organization for Standardization
Provided by IHS under license with ISO
No reproduction or networking permitted without license from IHS
Not for Resale

8) Define the ΔRCS of the EUT tag using the radar equation given below:

$$\Delta RCS = \frac{\Delta P_{tag}}{P_e} \frac{4\pi}{G_{0t} \cdot G_{0r}} \left(\frac{4\pi}{\lambda} \right)^2$$

NOTE This procedure is based on "UHF RFID Tag Delta Radar Cross Section (ΔRCS) Measurement" document, see bibliography.

5.2.2.3 Test report

The test report shall give the measured values of ΔRCS. The pass/fail condition is determined whether the measured values are within the requirements as specified in figures in ISO/IEC 18000-6 and the evaluated ΔRCS is at least above the value from ISO/IEC 18000-6. Furthermore, the EUT and the interrogator orientation and position, as well as the used interrogator output power and the used operation frequency shall be recorded.

5.2.3 Tag response time

5.2.3.1 Test purpose

The objective of this test is to verify the tag response time Trs referencing the parameters in ISO/IEC 18000-6.

5.2.3.2 Test procedure

The interrogator shall transmit a **Init_round_all** command (See clause B.1.1) at the maximum power allowed under the regulations of the selected carrier frequency for testing.

The measurements shall be done using the tag backscatter test setup, the tag positioned $d_{T,IA} = 3\ \lambda$ and $d_{T,MA} = 3\ \lambda$ away from the test interrogator antennas.

The response time shall be measured by a scope as specified in Annex D.

NOTE An example for the measurements is given in clause G.1.

5.2.3.3 Test report

The test report shall give the measured values of turn around time. The pass/fail condition is determined whether the measured values are within the requirements for the response time specified to the respective Type.

5.2.4 Tag bit rate

5.2.4.1 Test objective

The objective of this test is to verify the bit rate accuracy and data rate of the return link by verification of the Trlb parameter.

5.2.4.2 Test procedure

The interrogator shall transmit a **Init_round_all** command (See clause B.1.1)at the maximum power allowed under the regulations of the selected carrier frequency for testing.

The tag response waveform shall be recorded by a oscilloscope as specified in Annex D using the tag backscatter test setup, the tag positioned $d_{T,IA} = 3\ \lambda$ and $d_{T,MA} = 3\ \lambda$ away from the test interrogator antennas.

The bit rate accuracy shall be measured on the preamble of the tag response for each type respectively.

© ISO/IEC 2008 – All rights reserved

Copyright International Organization for Standardization
Provided by IHS under license with ISO
No reproduction or networking permitted without license from IHS
Not for Resale

The average on the first seven bits of preamble shall be used to measure the bite rate accuracy.

5.2.4.3 Test report

The test report shall give the measured values of bit rate calculated according the following formulas:

$$T_{B7} = 7_{Trlb}$$

$$bit\ rate = \frac{7}{7 \cdot T_{B7}}$$

The pass/fail condition is determined whether the measured values are within the requirements as specified in clause 6.5.4 for type A in ISO/IEC 18000-6.

5.2.5 Tag state storage time

5.2.5.1 Test objective

The objective of this test is to verify the state storage time of the tag if the energising field is absent or insufficient.

5.2.5.2 Test procedure

The interrogator shall transmit a **Init_round_all** command (See clause B.1.1) at the maximum power allowed under the regulations of the selected carrier frequency for testing.

After the end of mandatory command sent by the generator, the field shall be shut down for a specified time during two tag states.

For type A the following shall be done:

a) Quiet state

The test shall be executed for shutoff time equal to the lower limit value of time defined in ISO/IEC 18000-6 on which the tag has to keep the Quiet state.

b) Other states

The test shall be executed for shutoff time equal to the lower limit value of time defined in ISO/IEC 18000-6 during which the tag has to retain its state.

NOTE An example for the measurements is given in Clause G.2.

5.2.5.3 Test report

The test report shall give the tested values of limit storage state time. The pass/fail condition is determined whether the measured values are within the requirements in the ISO/IEC 18000-6 Timing Specification for Tag state storage for Type A.

© ISO/IEC 2008 – All rights reserved
Copyright International Organization for Standardization
Provided by IHS under license with ISO
No reproduction or networking permitted without license from IHS
Not for Resale

6 Conformance tests for ISO/IEC 18000-6 Type B

6.1 Functional tests of interrogator

6.1.1 Interrogator modulation test

6.1.1.1 Test objective

The objective of this test is to verify that the interrogator provides the appropriate modulation waveform required for operation of tags.

6.1.1.2 Test procedure

The interrogator shall transmit a **GROUP_SELECT_EQ** command (see Clause B.2.1) at the maximum power allowed under the regulations of the selected carrier frequency for testing.

In case the interrogator is intended for operation of non-overlapping RF bands, then this test shall be done for each RF band.

Measurements shall be done with a sense antenna positioned at a distance $d_S = 3\ \lambda$ and $d_S = 10\ \lambda$ and for each operation mode.

A digital oscilloscope as specified in Annex D and the sense antenna shall be used to record the waveform provided by the interrogator.

6.1.1.3 Test report

The test report shall give the measured values of the parameters according Table 6. The pass/fail condition is determined whether the measured values are within the requirements as specified in ISO/IEC 18000-6. Furthermore, the EUT and the sense antenna orientation and position, as well as the used interrogator output power and the used operation frequency shall be recorded.

Table 6 — Measurements to be made

Parameter	Conditions
M	Low index interrogator modulation mode
Tr	Low index interrogator modulation mode
Tf	Low index interrogator modulation mode
M	High index interrogator modulation mode
Tr	High index interrogator modulation mode
Tf	High index interrogator modulation mode

6.1.2 Interrogator demodulation and turn around time

6.1.2.1 Test objective

The objectives of this test are to verify whether the interrogator is capable of

— demodulating signals from the tags,

— receiving the data transmitted by the tag emulator after the minimum specified turn-around time.

--`,,```,,,,````-`-`,,`,,`,`,,`---

© ISO/IEC 2008 – All rights reserved

Copyright International Organization for Standardization
Provided by IHS under license with ISO
No reproduction or networking permitted without license from IHS
Not for Resale

6.1.2.2 Test procedure

The interrogator shall transmit a **GROUP_SELECT_EQ** command (see Clause B.2.1) at the maximum power allowed under the regulations of the selected carrier frequency for testing.

After the command provided by the interrogator has been sent and after the minimum turn around time, a tag emulator as specified in Annex F shall transmit a typical response to the **GROUP_SELECT_EQ** command at a minimum ΔRCS specified in ISO/IEC 18000-6 Tag: 7d. The tag emulator does not need to demodulate the command, but shall only detect its end to respond after the minimum turn-around time.

When the interrogator is intended for operation of non-overlapping RF bands this test shall be done for each RF band.

Measurements shall be done with a tag emulator positioned at d_{TE} = 10 λ for both the minimum and maximum tag response data rate, i.e. the turn around time from interrogator command to tag response.

In case the interrogator is design for shorter communication distances, then the distance d_{TE} may be decreased and the actual used value shall be mentioned in test report.

The interrogator (digital) demodulator shall accept the tag response including verification of the CRC.

6.1.2.3 Test report

The test report shall contain the tag emulator distance to the interrogator and the ΔRCS value setup in the tag emulator. Furthermore, also the set up turnaround time from the tag emulator, the EUT and the tag emulator orientation and position, as well as the used interrogator output power and the used operation frequency shall be recorded.

6.2 Functional tests of tag

6.2.1 Tag demodulation and turn around time

6.2.1.1 Test objective

The objectives of this test are to verify whether the tag is capable of

— demodulating signals from the interrogator,

— receiving the data transmitted by the interrogator after the minimum specified response to command turn-around time.

6.2.1.2 Test procedure

The test interrogator shall transmit a **GROUP_SELECT_EQ** command (see Clause B.2.1).

The tag (EUT) shall receive the command provided by the interrogator and shall provide an appropriate response. After complete reception of the tag response the interrogator shall generate a new **GROUP_SELECT_EQ** command within the minimum specified turn around time between tag response and interrogator command.

Measurements shall be done by verifying that the tag detected the command appropriately by means of evaluation of its response. Measurements shall be done at P_I = 1,2 $P_{I,min}$ or the minimum tag activation power density $S_{T,min}$ for each operation type of the interrogator command data rate.

The power density $S_{T,min}$ is related to the test interrogator radiated power $P_{I,min}$ as following:

$$P_{I,\min} = 4\pi d_{T,IA}^2 S_{T,\min} \frac{1}{G_{IA}}$$

--`,,```,,,,````-`-`,,`,,`,`,,`---
© ISO/IEC 2008 – All rights reserved
Copyright International Organization for Standardization
Provided by IHS under license with ISO
No reproduction or networking permitted without license from IHS
Not for Resale

In case the interrogator is design for shorter communication distances, then the distance d_{TE} may be decreased and the actual used value shall be mentioned in test report.

The test shall be seen as successful, when it could be shown that the tag sent the correct response for both commands including verification of the CRC.

The interrogator waveform shall contain the setups of the waveform for the respective types according Table 7.

Table 7 — Setups of waveforms

Setup number	Setup description	Parameter setting
B-1	Minimum modulation index for low modulation index operation mode	M = Mmin
B-2	Maximum modulation index for low modulation index operation mode	M = Mmax
B-3	Minimum modulation index for high modulation index operation mode	M = Mmin
B-4	Maximum modulation index for high modulation index operation mode	M $\geqslant$ 99% * Mmax

6.2.1.3 Test report

The test result shall be recorded as successful or unsuccessful. The test report shall contain the tag distance to the interrogator. Furthermore, also the set up turn around time from the tag response to interrogator command, the EUT and the interrogator orientation and position, as well as the used interrogator output power and the used operation frequency shall be recorded.

6.2.2 Tag backscatter

6.2.2.1 Test objective

The objective of this test is to verify that the tag provides the appropriate modulation waveform and backscatter strength required to be successfully detected and received by the interrogator.

Measurements are carried out in an anechoic chamber in bistatic antennas configuration as shown in figure 4, I and Q signals are measured with and without the tag present in the anechoic chamber that allows measurement of the difference of re-radiated power issued only from the tag, and thus find the ΔRCS.

6.2.2.2 Test procedure

Measurements shall be done with a tag positioned $d_{T,IA}$ = 1m and $d_{T,MA}$ = 1m away from the interrogator antenna at a power $P_{I,min}$.

Where $P_{I,min}$ is the minimum power allowing the EUT tag activation.

A vector signal analyser as specified in Annex E shall be used to record the quadrature baseband voltages I and Q versus time.

Test setup shall be calibrated to determine antennas gain and mismatch and also cables loss, to be taking into account for all power measurements.

Delta radar cross-section measurement procedure:

© ISO/IEC 2008 – All rights reserved

Copyright International Organization for Standardization
Provided by IHS under license with ISO
No reproduction or networking permitted without license from IHS
Not for Resale

1) The signal generator shall be set to the required test frequency.

2) The signal generator amplitude shall be set to a value that allows the EUT tag activation.

3) Using the power meter determine the power at the entrance of the transmit antenna **Pe**, which is defined as the average power measured over at least 100μs period during the continues waves signal following the signal generator command.

4) The signal analyser shall be set to measure the quadrature baseband I and Q voltages versus time, with a sampling rate of at least 5Msps.

5) Without the tag placed in the anechoic chamber, the signal analyser shall be set to capture at least 100μs period of I and Q samples at the continues wave just following the signal generator command, determine the Ic and Qc voltages levels.

6) With the tag now placed in the anechoic chamber, the analyser shall be set to capture I and Q voltage samples at least during 10 symbols of tag reply, determine the I and Q voltages corresponding to the two modulation states of tag ($I_{r,0}/Q_{r,0}$) and ($I_{r,1}/Q_{r,1}$).

7) Measure the difference of power issue from the EUT tag backscattering according to the equation below:

$$\Delta P_{tag}(rms) = \frac{1}{100} \cdot \left| \left((I_{r,1} - I_c)^2 + (Q_{r,1} - Q_c)^2 \right) - \left((I_{r,0} - I_c)^2 + (Q_{r,0} - Q_c)^2 \right) \right|$$

8) Define the ΔRCS of the EUT tag using the radar equation given below:

$$\Delta RCS = \frac{\Delta P_{tag}}{P_e} \frac{4\pi}{G_{0t} \cdot G_{0r}} \left(\frac{4\pi}{\lambda} \right)^2$$

NOTE This procedure is based on “UHF RFID Tag Delta Radar Cross Section (ΔRCS) Measurement” document, see bibliography.

6.2.2.3 Test report

The test report shall give the measured values of ΔRCS. The pass/fail condition is determined whether the measured values are within the requirements as specified in figures in ISO/IEC 18000-6 and the evaluated ΔRCS is at least above the value from ISO/IEC 18000-6. Furthermore, the EUT and the interrogator orientation and position, as well as the used interrogator output power and the used operation frequency shall be recorded.

6.2.3 Tag response time

6.2.3.1 Test objective

The objective of this test is to verify the tag response time Quiet referencing the parameters in ISO/IEC 18000-6.

© ISO/IEC 2008 – All rights reserved
Copyright International Organization for Standardization
Provided by IHS under license with ISO
No reproduction or networking permitted without license from IHS
Not for Resale

6.2.3.2 Test procedure

The interrogator shall transmit a **GROUP_SELECT_EQ** command (see Clause B.2.1) at the maximum power allowed under the regulations of the selected carrier frequency for testing.

The measurements shall be done using the tag backscatter test setup, the tag positioned $d_{T,IA} = 3\ \lambda$ and $d_{T,MA} = 3\ \lambda$ away from the test interrogator antennas.

The response time shall be measured by a scope as specified in Annex D.

NOTE An example for the measurements is given in Clause G.1.

6.2.3.3 Test report

The test report shall give the measured values of turn around time. The pass/fail condition is determined whether the measured values are within the requirements for the response time specified to the respective Type.

6.2.4 Tag bit rate

6.2.4.1 Test objective

The objective of this test is to verify the bit rate accuracy and data rate of the return link by verification of the Trlb parameter.

6.2.4.2 Test procedure

The interrogator shall transmit a **GROUP_SELECT_EQ** command (see Clause B.2.1) at the maximum power allowed under the regulations of the selected carrier frequency for testing.

The tag response waveform shall be recorded by a oscilloscope as specified in Annex D using the tag backscatter test setup, the tag positioned $d_{T,IA} = 3\ \lambda$ and $d_{T,MA} = 3\ \lambda$ away from the test interrogator antennas.

The bit rate accuracy shall be measured on the preamble of the tag response for each type respectively.

The average on the first seven bits of preamble shall be used to measure the bite rate accuracy.

6.2.4.3 Test report

The test report shall give the measured values of bit rate calculated according the following formulas (see Annex G):

$$T_{rlb_average} = \frac{\sum_1^7 T_{rlb_n}}{7}$$

$$bit\ rate = \frac{1}{T_{rlb_average}}$$

The pass/fail condition is determined whether the measured values are within the requirements as specified in ISO/IEC 18000-6 protocol standard.

--`,,```,,,,````-`-`,,`,,`,`,,`---
© ISO/IEC 2008 – All rights reserved
Copyright International Organization for Standardization
Provided by IHS under license with ISO
No reproduction or networking permitted without license from IHS
Not for Resale

6.2.5 Tag state storage time

6.2.5.1 Test objective

The objective of this test is to verify the state storage time of the tag if the energising field is absent or insufficient.

6.2.5.2 Test procedure

The interrogator shall transmit a **READ** command at the maximum power allowed under the regulations of the selected carrier frequency for testing.

After the end of mandatory command sent by the generator, the field shall be shut down for a specified time during two tag states.

The test shall be executed for a shutoff time of t_{DE_SB} defined in ISO/IEC 18000-6 and the flag DE_SB shall be still be set when verified.

NOTE An example for the measurements is given in Clause G.2.

6.2.5.3 Test report

The test report shall give the tested values of limit storage state time. The pass/fail condition is determined whether the measured values are within the requirements in the ISO/IEC 18000-6 Timing Specification for t_{DE_SB}.

7 Conformance tests for ISO/IEC 18000-6 Type C

7.1 Tag functional tests

7.1.1 Tag Frequency range

7.1.1.1 Purpose

The purpose of this test is to verify that the EUT tag shall be capable of receiving power from and communicating with interrogators within the frequency range from 860 MHz to 960 MHz.

7.1.1.2 Procedure

Tag frequency range, measurement procedure:

1) The waveform generator amplitude shall be set to the maximum value authorized by the local regulations.

2) The signal analyser Trigger shall be set to frequency mask trigger waiting tag response, the signal analyser trigger will be active if the tag response is present.

3) The signal generator shall be set with all parameters defined in Table 8 and with the first test case parameters defined in Table 2 for variable test parameters.

4) A **QUERY** command shall be continuously sent followed by the continuous wave.

5) Wait until the signal analyser is triggered, if it is not triggered in 1 s, then finish the test case.

6) The steps 3) to 5) shall be repeated for all the test cases defined in Table 9.

© ISO/IEC 2008 – All rights reserved
Copyright International Organization for Standardization
Provided by IHS under license with ISO
No reproduction or networking permitted without license from IHS
Not for Resale

Table 8 — Tag frequency range test parameters

TEST : Tag frequency range				
RF PARAMETERS				
Power EIRP (dbm) : **maximum power authorized**			Frequency (MHz) : **Variable**	
Modulation type: **DSB-ASK**			Modulation index : **90 %**	
PROTOCOL SETTINGS				
Command : **Query**				
Parameters	DR:**8**	M:**1**	Trext:**0**	
Timings	Tari (µs):**25**	PW(µs): **12,5**	RTcal(µs): **62,5**	TRcal(µs): **100**

Table 9 — Tag frequency test cases

	Frequency (MHz)
1	866
2	915
3	922
4	953

7.1.1.3 Test report

The test report shall give for each test point all communication parameters and the test verdict pass or fail, the pass condition for each point is obtained when the signal analyser is triggered that means that the tag is working at the test frequency.

7.1.2 Tag demodulation capability

7.1.2.1 Purpose

The purpose of this test is to verify that the EUT tag shall be capable of demodulating all three modulation types DSB-ASK, SSB-ASK and PR-ASK.

7.1.2.2 Procedure

Tag demodulation capability, measurement procedure:

1) The waveform generator amplitude shall be set to the maximum value authorized by the local regulations.

2) The Signal analyser Trigger shall be set to frequency mask trigger waiting tag response, the signal analyser trigger will be active if the tag response is present.

3) The signal generator shall be set with all parameters defined in Table 10 and with the first test case parameters defined in Table 4 for variable test parameters.

4) A **QUERY** command shall be continuously sent followed by the continuous wave.

5) Wait until the signal analyser is triggered, if it is not triggered in 1 s, then finish the test case.

6) The steps 3) to 5) shall be repeated for all the test cases defined in Table 11.

--`,,```,,,,````-`-`,,`,,`,`,,`---

© ISO/IEC 2008 All rights reserved

Copyright International Organization for Standardization
Provided by IHS under license with ISO
No reproduction or networking permitted without license from IHS
Not for Resale

Table 10 — Tag demodulation capability test parameters

TEST : Tag demodulation capability				
RF PARAMETERS				
Power EIRP (dbm) : **maximum power authorized**			Frequency (MHz) : **Variable**	
Modulation type: **Variable**			Modulation index : **90 %**	
PROTOCOL SETTINGS				
Command : **Query**				
Parameters	DR:**8**	M:**1**	Trext:**0**	
Timings	Tari (µs):**25**	PW(µs): **12,5**	RTcal(µs): **62,5**	TRcal(µs): **100**

Table 11 — Tag demodulation capability test cases

	Frequency (MHz)	Modulation type
1	866	DSB-ASK
2		SSB-ASK
3		PR-ASK
4	915	DSB-ASK
5		SSB-ASK
6		PR-ASK
7	922	DSB-ASK
8		SSB-ASK
9		PR-ASK
10	953	DSB-ASK
11		SSB-ASK
12		PR-ASK

7.1.2.3 Test report

The test report shall give for each test point all communication parameters and the test verdict pass or fail, the pass condition for each point is obtained when the signal analyser is triggered that means that the tag is working at the test frequency and modulation.

7.1.3 Tag duty cycle

7.1.3.1 Purpose

The purpose of this test is to verify that the duty cycle for FM0 and Miller encoding, shall be a minimum of 45 % and a maximum of 55 %, with a nominal value of 50 %.

7.1.3.2 Procedure

Tag duty cycle, measurement procedure:

1) The waveform generator amplitude shall be set to the maximum value authorized by the local regulations.

2) The signal analyser shall be set to power versus time mode.

3) The signal generator shall be set with all parameters defined in Table 12.

© ISO/IEC 2008 – All rights reserved
Copyright International Organization for Standardization
Provided by IHS under license with ISO
No reproduction or networking permitted without license from IHS
Not for Resale

4) A **QUERY** command shall be continuously sent followed by the continuous wave.

5) Wait until signal analyser is triggered, capture the demodulated tag reply trace power versus time.

6) In the demodulated trace data, measure the duty cycle for 00-data and 11-data sequence in case of FM0 tag encoding, and for 0-data and 1-data for Miller tag encoding.

7) The steps 3) to 6) shall be repeated for all the test cases defined in Table 13.

Table 12 — Tag duty cycle test parameters

TEST : Tag duty cycle				
RF PARAMETERS				
Power EIRP (dbm) : **maximum power authorized**			Frequency (MHz) : **Variable**	
Modulation type: **DSB-ASK**			Modulation index : **90 %**	
PROTOCOL SETTINGS				
Command : **Query**				
Parameters	DR: **Variable**	M: **Variable**	Trext:**0**	
Timings	Tari (µs):**Variable**	PW(µs): **0,5*Tari**	RTcal(µs): **3*Tari**	TRcal(µs): **Variable**

© ISO/IEC 2008 All rights reserved

Copyright International Organization for Standardization
Provided by IHS under license with ISO
No reproduction or networking permitted without license from IHS
Not for Resale

Table 13 — Tag duty cycle test cases

	Frequency (MHz)	M	D	Tari (µs)	TRcal (µs)
1	866	1	64/3	6,25	33,3 **(LF=640 KHz)**
2			64/3	12,5	66,7 **(LF=320 KHz)**
3			8	25	200 **(LF=40 KHz)**
4		2	64/3	6,25	33,3 **(LF=640 KHz)**
5			64/3	12,5	66,7 **(LF=320 KHz)**
6			8	25	200 **(LF=40 KHz)**
7		4	64/3	6,25	33,3 **(LF=640 KHz)**
8			64/3	12,5	66,7 **(LF=320 KHz)**
9			8	25	200 **(LF=40 KHz)**
10		8	64/3	6,25	33,3 **(LF=640 KHz)**
11			64/3	12,5	66,7 **(LF=320 KHz)**
12			8	25	200 **(LF=40 KHz)**

	Frequency (MHz)	M	D	Tari (µs)	TRcal (µs)
13	915	1	64/3	6,25	33,3 **(LF=640 KHz)**
14			64/3	12,5	66,7 **(LF=320 KHz)**
15			8	25	200 **(LF=40 KHz)**
16		2	64/3	6,25	33,3 **(LF=640 KHz)**
17			64/3	12,5	66,7 **(LF=320 KHz)**
18			8	25	200 **(LF=40 KHz)**
19		4	64/3	6,25	33,3 **(LF=640 KHz)**
20			64/3	12,5	66,7 **(LF=320 KHz)**
21			8	25	200 **(LF=40 KHz)**
22		8	64/3	6,25	33,3 **(LF=640 KHz)**
23			64/3	12,5	66,7 **(LF=320 KHz)**
24			8	25	200 **(LF=40 KHz)**

	Frequency (MHz)	M	D	Tari (µs)	TRcal (µs)
25	922	1	64/3	6,25	33,3 **(LF=640 KHz)**
26			64/3	12,5	66,7 **(LF=320 KHz)**
27			8	25	200 **(LF=40 KHz)**
28		2	64/3	6,25	33,3 **(LF=640 KHz)**
29			64/3	12,5	66,7 **(LF=320 KHz)**
30			8	25	200 **(LF=40 KHz)**
31		4	64/3	6,25	33,3 **(LF=640 KHz)**
32			64/3	12,5	66,7 **(LF=320 KHz)**
33			8	25	200 **(LF=40 KHz)**
34		8	64/3	6,25	33,3 **(LF=640 KHz)**
35			64/3	12,5	66,7 **(LF=320 KHz)**
36			8	25	200 **(LF=40 KHz)**

	Frequency (MHz)	M	D	Tari (µs)	TRcal (µs)
37	953	1	64/3	6,25	33,3 **(LF=640 KHz)**
38			64/3	12,5	66,7 **(LF=320 KHz)**
39			8	25	200 **(LF=40 KHz)**
40		2	64/3	6,25	33,3 **(LF=640 KHz)**
41			64/3	12,5	66,7 **(LF=320 KHz)**
42			8	25	200 **(LF=40 KHz)**
43		4	64/3	6,25	33,3 **(LF=640 KHz)**
44			64/3	12,5	66,7 **(LF=320 KHz)**
45			8	25	200 **(LF=40 KHz)**
46		8	64/3	6,25	33,3 **(LF=640 KHz)**
47			64/3	12,5	66,7 **(LF=320 KHz)**
48			8	25	200 **(LF=40 KHz)**

7.1.3.3 Test report

The test report shall give for each test point all communication parameters and the test verdict pass or fail, the pass condition for FM0 tag encoding (M=0) is obtained if the measured duty cycle of 00 or 11 sequence is in the range 50 % ± 5 %, for Miller tag encoding (M=1,2,3) the pass condition is obtained if the duty cycle of 0 or 1 symbol is in the range 50 % ± 5 %.

7.1.4 Tag preamble

7.1.4.1 Purpose

The purpose of this test is to verify that the FM0 and Miller preamble signalling shall be as described in ISO/IEC 18000-6 Type C protocol standard.

© ISO/IEC 2008 – All rights reserved
Copyright International Organization for Standardization
Provided by IHS under license with ISO
No reproduction or networking permitted without license from IHS
Not for Resale

7.1.4.2 Procedure

Tag preamble, measurement procedure:

1) The waveform generator amplitude shall be set to the maximum value authorized by the local regulations.

2) The signal analyser shall be set to power versus time mode.

3) The signal generator shall be set with all parameters defined in Table 14 and with the first test case parameters defined in Table 7 for variable test parameters.

4) A **QUERY** command shall be continuously sent followed by the continuous wave.

5) Wait until signal analyser is triggered, capture the demodulated tag reply trace power versus time.

6) In the demodulated trace data, capture and verify the tag preamble.

7) The steps 3) to 6) shall be repeated for all the test cases defined in Table 15.

Table 14 — Tag preamble test parameters

TEST : Tag preamble				
RF PARAMETERS				
Power EIRP (dbm) : **maximum power authorized**			Frequency (MHz) : **Variable**	
Modulation type: **DSB-ASK**			Modulation index : **90 %**	
PROTOCOL SETTINGS				
Command : **Query**				
Parameters	DR: **8**	M: **Variable**	Trext: **Variable**	
Timings	Tari (µs): **25**	PW(µs): **12,5**	RTcal(µs): **62,5**	TRcal(µs): **100**

Table 15 — Tag preamble test cases

	Freq (MHz)	M	TRext
1	866	1	0
2			1
3		2	0
4			1
5		4	0
6			1
7		8	0
8			1

	Freq (MHz)	M	TRext
9	915	1	0
10			1
11		2	0
12			1
13		4	0
14			1
15		8	0
16			1

	Freq (MHz)	M	TRext
17	922	1	0
18			1
19		2	0
20			1
21		4	0
22			1
23		8	0
24			1

	Freq (MHz)	M	TRext
25	953	1	0
26			1
27		2	0
28			1
29		4	0
30			1
31		8	0
32			1

7.1.4.3 Test report

The test report shall give for each test point all communication parameters and the test verdict pass or fail, the pass condition is obtained if the EUT tag preamble is as described in ISO/IEC 18000-6 Type C protocol standard.

© ISO/IEC 2008 – All rights reserved

Copyright International Organization for Standardization
Provided by IHS under license with ISO
No reproduction or networking permitted without license from IHS
Not for Resale

7.1.5 Tag link frequency tolerance and variation

7.1.5.1 Purpose

The purpose of this test is to verify that the tag can backscatter its reply with a variable link frequency from 40 to 640 kHz with the tolerance defined in ISO/IEC 18000-6 Type C protocol standard and to verify that the frequency variation during the tag backscattering is in the range ± 2,5 %.

7.1.5.2 Procedure

Tag link frequency tolerance and variation, measurement procedure:

1) The waveform generator amplitude shall be set to the maximum value authorized by the local regulations.

2) The signal analyser shall be set to power versus time mode.

3) The signal generator shall be set with all parameters defined in Table 16 and with the first test case parameters defined in Table 8 for variable test parameters.

4) A **QUERY** command shall be continuously sent followed by the continuous wave.

5) Wait until signal analyser is triggered, capture the demodulated tag reply trace power versus time.

6) Measure the tag link frequency from the demodulated trace data for each symbol and determine the min and max value.

7) The steps 3) to 5) shall be repeated for all the test cases defined in Table 17.

Table 16 — Tag link frequency tolerance and variation test parameters

TEST : Tag link frequency tolerance and variation				
RF PARAMETERS				
Power EIRP (dbm) : **maximum power authorized**			Frequency (MHz) : **Variable**	
Modulation type: **DSB-ASK**			Modulation index : **90 %**	
PROTOCOL SETTINGS				
Command : **Query**				
Parameters	DR: **Variable**	M: **1**	Trext:**1**	
Timings	Tari (µs): **Variable**	PW(µs):**0,5*Tari**	RTcal(µs):**3*Tari**	TRcal(µs):**Variable**

© ISO/IEC 2008 – All rights reserved
Copyright International Organization for Standardization
Provided by IHS under license with ISO
No reproduction or networking permitted without license from IHS
Not for Resale

Table 17 — Tag Link frequency tolerance an variation test cases

	Frequency (MHz)	Tari (µs)	D	TRcal (µs)
1	866	6,25	64/3	33,7 **(LF=640 KHz)**
2		12,5	64/3	66,7**(LF=320 KHz)**
3		25	8	200 **(LF=40 KHz)**
4	915	6,25	64/3	33,7 **(LF=640 KHz)**
5		12,5	64/3	66,7**(LF=320 KHz)**
6		25	8	200 **(LF=40 KHz)**
7	922	6,25	64/3	33,7 **(LF=640 KHz)**
8		12,5	64/3	66,7**(LF=320 KHz)**
9		25	8	200 **(LF=40 KHz)**
10	953	6,25	64/3	33,7 **(LF=640 KHz)**
11		12,5	64/3	66,7**(LF=320 KHz)**
12		25	8	200 **(LF=40 KHz)**

7.1.5.3 Test report

The test report shall give for each test point all communication parameters and the test verdict pass or fail, the pass condition for each point is obtained if the tag link frequency respects the tolerances defined in ISO/IEC 18000-6 Type C protocol standard and the variation of the link frequency during tag backscattering is in the range ± 2,5 %.

7.1.6 Tag link timing T1

7.1.6.1 Purpose

The purpose of this test is to verify that the tag meets the link timing parameter T1 which defined the time from Interrogator transmission to tag response.

7.1.6.2 Procedure

Tag timing parameter T1, measurement procedure:

1) The waveform generator amplitude shall be set to the maximum value authorized by the local regulations.

2) The signal analyser shall be set to power versus time mode.

3) The signal generator shall be set with all parameters defined in Table 18 and with the first test case parameters defined in Table 10 for variable test parameters.

4) A **QUERY** command shall be continuously sent followed by the continuous wave.

5) Wait until signal analyser is triggered, capture the demodulated tag reply trace power versus time.

6) Measure the tag link timing parameter T1, from the last rising edge of the last bit of the Interrogator transmission to the first rising edge of the Tag response.

7) The steps 3) to 5) shall be repeated for all the test cases defined in Table 19.

--`,,```,,,,````-`-`,,`,,`,`,,`---
© ISO/IEC 2008 All rights reserved

Copyright International Organization for Standardization
Provided by IHS under license with ISO
No reproduction or networking permitted without license from IHS
Not for Resale

Table 18 — Tag link timing T1 test parameters

TEST : Tag link timing T1				
RF PARAMETERS				
Power EIRP (dbm) : **maximum power authorized**			Frequency (MHz) : **Variable**	
Modulation type: **DSB-ASK**			Modulation index : **90 %**	
PROTOCOL SETTINGS				
Command : **Query**				
Parameters	DR: **Variable**	M: **1**	Trext:**1**	
Timings	Tari (µs): **Variable**	PW(µs):**0,5*Tari**	RTcal(µs):**3*Tari**	TRcal(µs):**Variable**

Table 19 — Tag Link timing T1 test cases

	Frequency (MHz)	**Tari (µs)**	**D**	**TRcal (µs)**
1	866	6,25	64/3	33,7 **(LF=640 KHz)**
2		12,5	64/3	66,7**(LF=320 KHz)**
3		25	8	200 **(LF=40 KHz)**
4	915	6,25	64/3	33,7 **(LF=640 KHz)**
5		12,5	64/3	66,7**(LF=320 KHz)**
6		25	8	200 **(LF=40 KHz)**
7	922	6,25	64/3	33,7 **(LF=640 KHz)**
8		12,5	64/3	66,7**(LF=320 KHz)**
9		25	8	200 **(LF=40 KHz)**
10	953	6,25	64/3	33,7 **(LF=640 KHz)**
11		12,5	64/3	66,7**(LF=320 KHz)**
12		25	8	200 **(LF=40 KHz)**

7.1.6.3 Test report

The test report shall give for each test case all communication parameters and the test verdict pass or fail, the pass condition for each point is obtained if the measured link timing parameter T1 is in the range $MAX(RTcal,10T_{pri}) \times (1 \pm FT) \pm 2\mu s$ as defined in ISO/IEC 18000-6 Type C protocol standard.

7.1.7 Tag link timing T2

7.1.7.1 Purpose

The purpose of this test is to verify that the tag meets the link timing parameter T2, the tag under test shall not backscattering its UII before T2 minimum of 3Tpri and after T2 maximum of 32Tpri.

7.1.7.2 Procedure

Tag link timing parameter T2, measurement procedure:

1) The waveform generator amplitude shall be set to the maximum value authorized by the local regulations.

2) The signal analyser shall be set to power versus time mode.

© ISO/IEC 2008 – All rights reserved
Copyright International Organization for Standardization
Provided by IHS under license with ISO
No reproduction or networking permitted without license from IHS
Not for Resale

3) The signal generator shall be set with all parameters defined in Table 20 and with the first test case parameters defined in Table 10 for variable test parameters.

4) A **QUERY** command shall be continuously sent followed by the continuous wave.

5) Wait until signal analyser is triggered, capture the demodulated tag reply trace power versus time.

6) The signal analyser shall be set to send an ACK command with the backscattered RN16. The command shall be sent immediately before T_2 minimum.

7) The steps 3) to 5) shall be repeated for the following:

   i) a tag DOES respond to an Interrogator command issued at 3Tpri;

   ii) a tag DOES respond to an Interrogator command issued at 20Tpri;

   iii) a tag DOES NOT respond to an Interrogator command issued at 32Tpri.

8) The steps 3) to 7) shall be repeated for all the test cases defined in Table 21.

Table 20 — Tag link timing T2 test parameters

TEST : Tag link timing T2				
RF PARAMETERS				
Power EIRP (dbm) : **maximum power authorized**			Frequency (MHz) : **Variable**	
Modulation type: **DSB-ASK**			Modulation index : **90 %**	
PROTOCOL SETTINGS				
Command : **Query**				
Parameters	DR: **Variable**	M: **1**	Trext:**1**	
Timings	Tari (µs): **Variable**	PW(µs):**0,5*Tari**	RTcal(µs):**3*Tari**	TRcal(µs):**Variable**

Table 21 — Tag Link timing T2 test cases

	Frequency (MHz)	**Tari (µs)**	**D**	**TRcal (µs)**
1	866	6,25	64/3	33,7 **(LF=640 KHz)**
2		12,5	64/3	66,7**(LF=320 KHz)**
3		25	8	200 **(LF=40 KHz)**
4	915	6,25	64/3	33,7 **(LF=640 KHz)**
5		12,5	64/3	66,7**(LF=320 KHz)**
6		25	8	200 **(LF=40 KHz)**
7	922	6,25	64/3	33,7 **(LF=640 KHz)**
8		12,5	64/3	66,7**(LF=320 KHz)**
9		25	8	200 **(LF=40 KHz)**
10	953	6,25	64/3	33,7 **(LF=640 KHz)**
11		12,5	64/3	66,7**(LF=320 KHz)**
12		25	8	200 **(LF=40 KHz)**

© ISO/IEC 2008 – All rights reserved

Copyright International Organization for Standardization
Provided by IHS under license with ISO
No reproduction or networking permitted without license from IHS
Not for Resale

7.1.7.3 Test report

The test report shall give for each test case all communication parameters and the test verdict pass or fail, the pass condition for each point is obtained if the tag does not respond to the ACK command.

7.1.8 Tag state diagram

7.1.8.1 Purpose

The purpose of this test is to verify that the EUT tag implement the correct state machine as described in ISO/IEC 18000-6 Type C.

7.1.8.2 Procedure

Tag state diagram, testing procedure:

1) The waveform generator amplitude shall be set to the maximum value authorized by the local regulations.

2) The signal analyser shall be set to power versus time mode.

3) The signal generator shall be set with all parameters defined in Table 22.

4) The EUT tag shall be set to the first test initial state “Ready”, in order to put the EUT tag into the Test initial state, lookup the corresponding state transition sequence in Table 23, then set the signal generator to apply the state transitions described in the state transition sequence column by looking up the corresponding commands in Table 24.

5) Set the signal generator to send all commands defined in “Ready states transitions” table in Annex A.

6) Check if the EUT tag is in the expected target state.

7) The steps 2) to 4) shall be repeated for all tag state, **Arbitrate**, **Acknowledged**, **Open**, **Secured**, **killed**.

Table 22 — Tag state diagram testing

Test: tag state diagram testing					
RF PARAMETERS					
Power EIRP (dbm) : **2W**		Frequency (MHz) : **866 or 915 or 922 or 953**			
Modulation type: **DSB-ASK**		Modulation index : **90 %**			
PROTOCOL SETTINGS					
Command : **Query**					
Parameters	DR:**8**	M:**1**	Trext:**0**		DR:**8**
Timings	Tari (µs):**25**	PW(µs): **12,5**	RTcal(µs): **62,5**	TRcal(µs): **100**	Tari (µs):**25**

© ISO/IEC 2008 – All rights reserved
Copyright International Organization for Standardization
Provided by IHS under license with ISO
No reproduction or networking permitted without license from IHS
Not for Resale

Table 23 — State Transition Sequence Table

Test initial state	State transition Sequence
Power Off	---
Ready	Power Off → Ready
Arbitrate	Power Off → Ready→ Arbitrate
Reply	Power Off → Ready→ Arbitrate→ Reply
Acknowledged	Power Off → Ready→ Arbitrate→ Reply→ Acknowledged
Open	Power Off → Ready→ Arbitrate→ Reply→ Acknowledged→ Open
Secured	Power Off → Ready→ Arbitrate→ Reply→ Acknowledged→ Open→ Secured
Killed	Power Off → Ready→ Arbitrate→ Reply→ Acknowledged→ Open→ Secured→ Killed

Table 24 — State Transition Table

State → Next State	Signal generator command		EUT tag reply
Power Off → Ready	**Power On**	→	
		←	**None**
Ready→ Arbitrate	**Query** [slot<> 0]	→	
		←	**None**
Arbitrate→ Reply	**QueryAdjust** [slot = 0]	→	
		←	**New RN16**
Reply→ Acknowledged	**ACK** [valid RN16]	→	
		←	**UII**
Acknowledged→ Open	**Req_RN** [valid RN16 & access password<>0]	→	
		←	**Handle**
Open→ Secured	**Access** [valid handle & valid access password]	→	
		←	**Handle**
Secured→ Killed	**Kill** [valid handle & valid access password]	→	
		←	**Handle**

7.1.8.3 Test report

The test report shall give for each test case all communication parameters and the test verdict pass or fail, the pass condition for each point is obtained if the tag implement all correct transition from all diagram states.

7.2 Interrogator functional tests

7.2.1 Interrogator data encoding

7.2.1.1 Purpose

The purpose of this test is to verify that the tolerance on all interrogator data encoding parameters shall be ±1 % as described in ISO/IEC 18000-6 Type C protocol standard.

7.2.1.2 Procedure

Interrogator data encoding, measurement procedure:

1) The EUT interrogator shall be configured for transmitting at the maximum power, with the first supported frequency and modulation type.

© ISO/IEC 2008 – All rights reserved

Copyright International Organization for Standardization
Provided by IHS under license with ISO
No reproduction or networking permitted without license from IHS
Not for Resale

2) The EUT interrogator shall be set with all parameters defined in Table 25 and with the first test case parameters defined in Table 26 for variable parameters.

3) The EUT interrogator shall be set to send a **QUERY** command followed by the continuous wave.

4) The signal analyser shall be set to power versus time mode.

5) Wait until signal analyser is triggered, capture all the demodulated trace power versus time.

6) Measure data-0 and data-1 durations from interrogator preamble trace.

7) The steps 2) to 6) shall be repeated for all the test cases that are supported by the EUT interrogator and compliant with local regulation.

8) The steps 2) to 7) shall be repeated for all EUT interrogator supported frequencies and modulations.

Table 25 — Interrogator data encoding test parameters

TEST : Interrogator data encoding				
RF PARAMETERS				
Power EIRP (dbm) : **max power authorized**			Frequency (MHz) : **Interrogator supported frequencies**	
Modulation type: **Interrogator supported modulations**			Modulation index : **Variable**	
PROTOCOL SETTINGS				
Command : **Query**				
Parameters	DR:**64/3**	M:**1**	Trext:**1**	
Timings	Tari (µs):**Variables**	PW(µs):**0,5* Tari**	RTcal(µs):**Variable**	TRcal(µs):**Variable**

Table 26 — Interrogator data encoding T2 test cases

	Tari (µs) = data_0	**RTcal(µs)**	**Modulation index (%)**
1	6,25	2,5*Tari **(data_1= 9,375 µs)**	80
2			100
3		3*Tari **(data_1= 12,5 µs)**	80
4			100
5	12,5	2,5*Tari **(data_1= 18,75 µs)**	80
6			100
7		3*Tari **(data_1= 25 µs)**	80
8			100
9	25	2,5*Tari **(data_1= 37,5 µs)**	80
10			100
11		3*Tari **(data_1= 50 µs)**	80
12			100

© ISO/IEC 2008 – All rights reserved
Copyright International Organization for Standardization
Provided by IHS under license with ISO
No reproduction or networking permitted without license from IHS
Not for Resale

7.2.1.3 Test report

The test report shall give for each test case all communication parameters and the test verdict pass or fail, the pass condition for each point is obtained if the tolerance for the duration of data-0 and data-1 are lower than 1 % for all the test conditions.

7.2.2 Interrogator RF envelope parameters

7.2.2.1 Purpose

The purpose of this test is to verify all the parameters pulse modulation depth, rise time, fall time, and PW, and shall be the same for a data-0 and a data-1 as described in ISO/IEC 18000-6 Type C protocol standard.

7.2.2.2 Procedure

Interrogator RF envelope parameters, measurement procedure:

1) The EUT interrogator shall be configured for transmitting at the maximum power, at the first supported frequency and modulation type.

2) The EUT interrogator shall be set with all parameters defined in Table 27 and with the first test case parameters defined in Table 28 for variable test parameters.

3) The EUT interrogator shall be set to send a **QUERY** command followed by the continuous wave.

4) The signal analyser shall be set to power versus time mode.

5) Wait until signal analyser is triggered, capture all the demodulated trace power versus time.

6) Measure the EUT interrogator PW and envelope rise and fall time as described in ISO/IEC 18000-6 Type C protocol standard.

7) The steps 2) to 6) shall be repeated for all the test cases that are supported by the EUT interrogator and compliant with local regulation.

8) The steps 2) to 7) shall be repeated for all EUT interrogator supported frequencies and modulations.

Table 27 — Interrogator RF envelope test parameters

TEST : Interrogator RF envelope parameters				
RF PARAMETERS				
Power EIRP (dbm) : **max power authorized**			Frequency (MHz) : **Interrogator supported frequencies**	
Modulation type: **Interrogator supported modulations**			Modulation index : **Variable**	
PROTOCOL SETTINGS				
Command : **Query**				
Parameters	DR:**64/3**	M:**1**	Trext:**1**	
Timings	Tari (µs):**Variables**	PW(µs): **Variable**	RTcal(µs):**3*Tari**	TRcal(µs):**Variable**

--`,,```,,,,````-`-`,,`,,`,`,,`---

© ISO/IEC 2008 – All rights reserved

Copyright International Organization for Standardization
Provided by IHS under license with ISO
No reproduction or networking permitted without license from IHS
Not for Resale

Table 28 — Interrogator RF envelope test cases

	Tari (µs) = data_0	PW (µs)	Modulation index (%)
1	6,25	2 **(PW min)**	80
2			100
3		0,525*Tari **(PW max)**	80
4			100
5	12,5	0,256*Tari **(PW min)**	80
6			100
7		0,525*Tari **(PW max)**	80
8			100
9	25	0,256*Tari **(PW min)**	80
10			100
11		0,525*Tari **(PW max)**	80
12			100

7.2.2.3 Test report

The test report shall give for each test case all communication parameters and the test verdict pass or fail, the pass condition for each point is obtained if the value of the parameters shall be in the limit maximum and minimum as specified in ISO/IEC 18000-6 Type C protocol standard.

7.2.3 Interrogator RF power-up and power-down parameters

7.2.3.1 Purpose

The purpose of this test is to verify that the Interrogator power-up and power down RF envelopes shall comply with RF envelope specified in ISO/IEC 18000-6 Type C protocol standard.

7.2.3.2 Procedure

Interrogator RF power-up and power-down, measurement procedure:

1) The EUT interrogator shall be configured for transmitting at the maximum power, at the first supported frequency and modulation type.

2) The signal analyser shall be set to power versus time mode.

3) The EUT interrogator under test shall be set to be powered on, to transmit a CW and then powered off.

4) The signal analyser shall capture all the interrogator signal trace.

5) Measure the interrogator rise time, fall time, settling time, signal level when off, undershoot, and overshoot as described in ISO/IEC 18000-6 Type C protocol standard.

6) In the interrogator power-up trace verify that once the carrier level has risen above the 10 % level, the power-up envelope shall rise monotonically until at least the ripple limit Ml, and that the RF envelope shall not fall below the 90 % point during interval Ts.

7) In the interrogator power-down trace verify that once the carrier level has fallen below the 90 % level, the power-down envelope shall fall monotonically until the power limit Ms.

8) The steps 3) to 7) shall be repeated for all EUT interrogator supported frequencies and modulations.

© ISO/IEC 2008 – All rights reserved
Copyright International Organization for Standardization
Provided by IHS under license with ISO
No reproduction or networking permitted without license from IHS
Not for Resale

7.2.3.3 Test report

The test report shall give for each test case all communication parameters and the test verdict pass or fail, the pass condition is obtained if the value of the parameters shall be in the limit maximum and minimum specified in ISO/IEC 18000-6 Type C protocol standard.

7.2.4 Interrogator preamble parameters

7.2.4.1 Purpose

The purpose of this test case is to verify that the preamble shall comprise a fixed-length start delimiter, a data-0 symbol, a R=>T calibration (RTcal) symbol, and a T=>R calibration (TRcal) symbol, as described in ISO/IEC protocol standard.

7.2.4.2 Procedure

Interrogator preamble parameters, measurement procedure:

1) The EUT interrogator shall be configured for transmitting at the maximum power, at the first supported frequency and modulation type.

2) The EUT interrogator shall be set with all parameters defined in Table 29 and with the first test case parameters defined in Table 30 for variable test parameters.

3) The EUT interrogator shall be set to send a **QUERY** command followed by the continuous wave.

4) The signal analyser shall capture all the interrogator signal trace.

5) Measure the interrogator delimiter duration,Data-0 duration, RTcal and TRcal timings as defined in ISO/IEC 18000-6 Type C protocol standard.

6) The steps 2) to 5) shall be repeated for all the test cases that are supported by the EUT interrogator and compliant with local regulation.

7) The steps 3) to 7) shall be repeated for all EUT interrogator supported frequencies and modulations.

Table 29 — Interrogator preamble test parameters

TEST : Interrogator preamble parameters				
RF PARAMETERS				
Power EIRP (dbm) : **maximum power authorized**			Frequency (MHz) : **Interrogator supported frequencies**	
Modulation type: **Interrogator supported modulations**			Modulation index : **90 %**	
PROTOCOL SETTINGS				
Command : **Query**				
Parameters	DR:**64/3**	M:**1**	Trext:**1**	
Timings	Tari (µs):**Variable**	PW(µs):**0,5*Tari**	RTcal(µs): **Variable**	TRcal(µs): **Variable**

© ISO/IEC 2008 All rights reserved

Copyright International Organization for Standardization
Provided by IHS under license with ISO
No reproduction or networking permitted without license from IHS
Not for Resale

Table 30 — Interrogator preamble test cases

	Tari (µs)	RTcal (µs)	TRcal (µs)
1	6,25	2,5*Tari	1,1*RTcal
2			3*RTcal
3		3*Tari	1,1*RTcal
4			3*RTcal
5	12,5	2,5*Tari	1,1*RTcal
6			3*RTcal
7		3*Tari	1,1*RTcal
8			3*RTcal
9	25	2,5*Tari	1,1*RTcal
10			3*RTcal
11		3*Tari	1,1*RTcal
12			3*RTcal

7.2.4.3 Test report

The test report shall give for each test case all communication parameters and the test verdict pass or fail, the pass condition is obtained for each test point if the tolerance for the duration of data-0, RTcal and TRcal shall be lower than 1 % for all the test conditions and the delimiter shall be 12,5 us ±5 %.

7.2.5 Interrogator link timing T2

7.2.5.1 Purpose

The purpose of this test is to verify that the EUT interrogator meets the timing parameter T2.

7.2.5.2 Procedure

Interrogator link timing T2, measurement procedure:

1) The EUT interrogator shall be configured for transmitting at the maximum power, at the first supported frequency and modulation type.

2) The EUT interrogator shall be set with all parameters defined in Table 31 and with the first test case parameters defined in Table 32 for variable test parameters.

3) The EUT interrogator shall be set to send a **QUERY** command followed by the continuous wave.

4) Set the tag emulator to backscatter an RN16 reply, the RN16 shall be sent after the typical value for T1, the EUT interrogator will send its ACK.

5) The signal analyser shall capture all demodulated trace power versus time (**Query**+**RN16**+**ACK**).

6) Measure the link parameter, finding the end of RN16 frequency variation and the beginning of ACK frequency variation.

7) The steps 3) to 4) shall be repeated for all the test cases that are supported by the EUT interrogator and compliant with local regulation.

8) The steps 3) to 7) shall be repeated for all EUT interrogator supported frequencies and modulations.

© ISO/IEC 2008 – All rights reserved
Copyright International Organization for Standardization
Provided by IHS under license with ISO
No reproduction or networking permitted without license from IHS
Not for Resale

Table 31 — Interrogator link timing T2 test parameters

TEST : Tag link timing parameter T2				
RF PARAMETERS				
Power EIRP (dbm) : **maximum power authorized**			Frequency (MHz) : **Variable**	
Modulation type: **DSB-ASK**			Modulation index : **90 %**	
PROTOCOL SETTINGS				
Command : **Query**				
Parameters	DR: **Variable**	M:**1**	Trext:**1**	
Timings	Tari (µs):**Variable**	PW (µs):**0,5*Tari**	Rtcal (µs):**3*Tari**	TRcal (µs): Variable

Table 32 — Tag link timing parameter T2 test cases

	Tari (µs)	**D**	**TRcal (µs)**
1	6,25	64/3	33,7 **(LF=640 KHz)**
2		8	66,7**(LF=320 KHz)**
3	12,5	64/3	200 **(LF=40 KHz)**
4		8	33,7 **(LF=640 KHz)**
5	25	64/3	66,7**(LF=320 KHz)**
6		8	200 **(LF=40 KHz)**

7.2.5.3 Test report

The test report shall give for each test case all communication parameters and the test verdict pass or fail, the pass condition is obtained for each test point if the measured time value shall be less than the maximum value for T2, according to ISO/IEC 18000-6 Type C protocol standard.

7.2.6 Interrogator link timing T3

7.2.6.1 Purpose

The purpose of this test is to verify that the EUT interrogator meets the timing parameter T3, which define the time an Interrogator waits, after T_1, before it issues another command.

7.2.6.2 Procedure

Interrogator link timing T3, measurement procedure:

1) The EUT interrogator shall be configured for transmitting at the maximum power, at the first supported frequency and modulation type.

2) The signal analyser shall be set to power versus time mode.

3) The EUT interrogator shall be set with all parameters defined in Table 33 and with the first test case parameters defined in Table 34 for variable test parameters.

4) Set EUT interrogator to transmit a **Select** command followed by **Query** command.

5) The signal analyser shall capture all demodulated trace power versus time (**Select** + **Query**).

© ISO/IEC 2008 All rights reserved

Copyright International Organization for Standardization
Provided by IHS under license with ISO
No reproduction or networking permitted without license from IHS
Not for Resale

6) Measure the link timing T4, finding the end of **select** frequency variation and the beginning of **Query** frequency variation.

7) The steps 3) to 6) shall be repeated for all the test cases that are supported by the EUT interrogator and compliant with local regulation.

8) The steps 3) to 7) shall be repeated for all EUT interrogator supported frequencies and modulations.

Table 33 — Tag link timing parameter T3 test parameters

TEST : Tag link timing parameter T3				
RF PARAMETERS				
Power EIRP (dbm) : **maximum power authorized**			Frequency (MHz) : **Variable**	
Modulation type: **DSB-ASK**			Modulation index : **90 %**	
PROTOCOL SETTINGS				
Command : **Query**				
Parameters	DR: **Variable**	M:**1**	Trext:**1**	
Timings	Tari (µs):**Variable**	PW (µs):**0,5*Tari**	Rtcal (µs):**3*Tari**	TRcal (µs): **Variable**

Table 34 — Tag link timing parameter T3 test cases

	Tari (µs)	**D**	**TRcal (µs)**
1	6,25	64/3	33,7 **(LF=640 KHz)**
2		8	66,7**(LF=320 KHz)**
3	12,5	64/3	200 **(LF=40 KHz)**
4		8	33,7 **(LF=640 KHz)**
5	25	64/3	66,7**(LF=320 KHz)**
6		8	200 **(LF=40 KHz)**

7.2.6.3 Test report

The test report shall give for each test case all communication parameters and the test verdict pass or fail, the pass condition is obtained for each test point if the measured time value shall be greater than the minimum value for T3, according to ISO/IEC 18000-6 Type C protocol standard.

7.2.7 Interrogator link timing T4

7.2.7.1 Purpose

The purpose of this test case is to verify that the EUT interrogator meets the timing parameter T4, which define the minimum time between Interrogator commands.

7.2.7.2 Procedure

Interrogator link timing T4, measurement procedure:

1) The EUT interrogator shall be configured for transmitting at the maximum power, at the first supported frequency and modulation type.

© ISO/IEC 2008 – All rights reserved
Copyright International Organization for Standardization
Provided by IHS under license with ISO
No reproduction or networking permitted without license from IHS
Not for Resale

2) The signal analyser shall be set to power versus time mode.

3) The EUT interrogator shall be set with all parameters defined in Table 35 and with the first test case parameters defined in Table 36 for variable test parameters.

4) Set EUT to initiate an inventory round, transmitting a **Query** command followed by **QueryRep** command.

5) The signal analyser shall capture all demodulated trace Power versus time (**Query** + **QueryRep**).

6) Measure the link timing T3+T1, finding the end of **Query** frequency variation and the beginning of **QueryRep** frequency variation, the link timing parameter T3 is calculated by Subtracting the corresponding T1 maximum value to the measured time (T1+T3).

7) The steps 3) to 6) shall be repeated for all the test cases that are supported by the EUT interrogator and compliant with local regulation.

8) The steps 3) to 7) shall be repeated for all EUT interrogator supported frequencies and modulations.

Table 35 — Tag link timing parameter T2 test parameters

TEST : Tag link timing parameter T4				
RF PARAMETERS				
Power EIRP (dbm) : **maximum power authorized**			Frequency (MHz) : **Variable**	
Modulation type: **DSB-ASK**			Modulation index : **90 %**	
PROTOCOL SETTINGS				
Command : **Query**				
Parameters	DR: **Variable**	M:**1**	Trext:**1**	
Timings	Tari (µs):**Variable**	PW (µs):**0,5*Tari**	Rtcal (µs):**3*Tari**	TRcal (µs): **Variable**

Table 36 — Tag link timing parameter T2 test cases

	Tari (µs)	**D**	**TRcal (µs)**
1	6,25	64/3	33,7 **(LF=640 KHz)**
2		8	66,7**(LF=320 KHz)**
3	12,5	64/3	200 **(LF=40 KHz)**
4		8	33,7 **(LF=640 KHz)**
5	25	64/3	66,7**(LF=320 KHz)**
6		8	200 **(LF=40 KHz)**

7.2.7.3 Test report

The test report shall give for each test case all communication parameters and the test verdict pass or fail, the pass condition is obtained for each test point if the measured time value shall be greater than the minimum value for T4, according to ISO protocol standard.

© ISO/IEC 2008 All rights reserved

Copyright International Organization for Standardization
Provided by IHS under license with ISO
No reproduction or networking permitted without license from IHS
Not for Resale

Annex A
(informative)

Test measurement site

A.1 Test sites and general arrangements for measurements involving the use of radiated fields

This annex describes the three most commonly available test sites, an anechoic chamber, an anechoic chamber with a ground plane and an Open Area Test Site (OATS), which may be used for radiated tests. These test sites are generally referred to as free field test sites. Both absolute and relative measurements can be performed in these sites. Where absolute measurements are to be carried out, the chamber should be verified.

NOTE To ensure reproducibility and tractability of radiated measurements only these test sites should be used in measurements in accordance with the present document.

A.1.1 Anechoic chamber

An anechoic chamber is an enclosure, usually shielded, whose internal walls, floor and ceiling are covered with radio absorbing material, normally of the pyramidal urethane foam type. The chamber usually contains an antenna support at one end and a turntable at the other. A typical anechoic chamber is shown in Figure A.1.

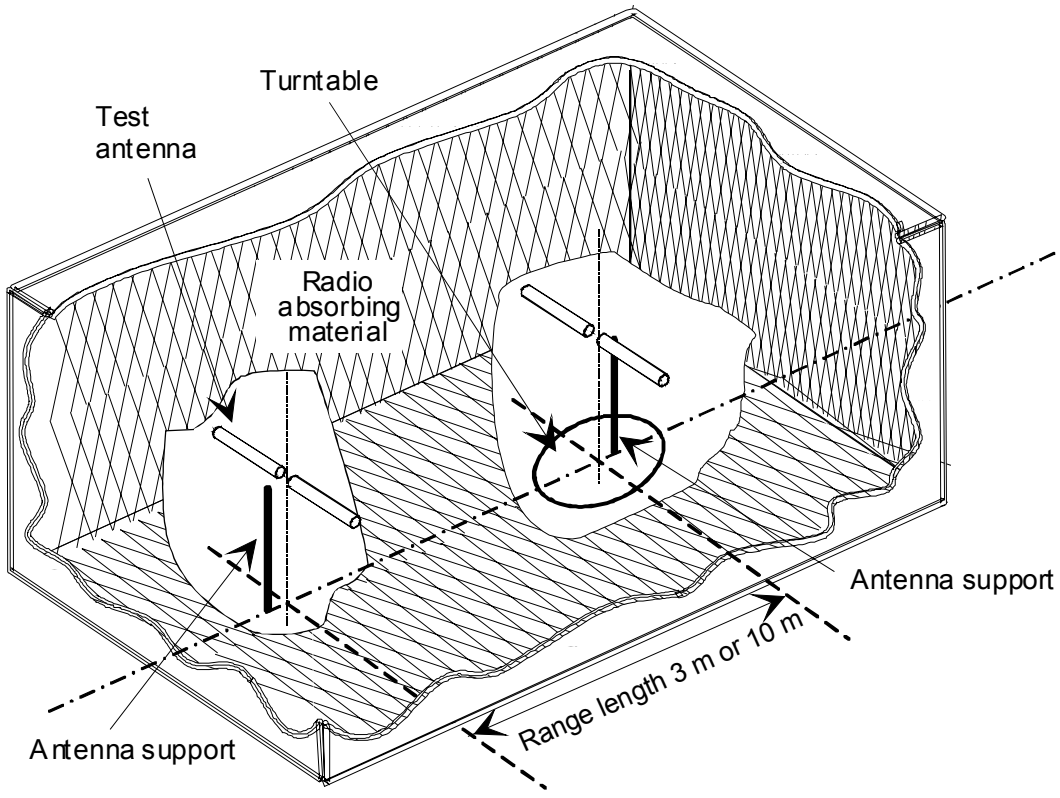

Figure A.1 — A typical anechoic chamber

© ISO/IEC 2008 – All rights reserved
Copyright International Organization for Standardization
Provided by IHS under license with ISO
No reproduction or networking permitted without license from IHS
Not for Resale

The chamber shielding and radio absorbing material work together to provide a controlled environment for testing purposes. This type of test chamber attempts to simulate free space conditions.

The shielding provides a test space, with reduced levels of interference from ambient signals and other outside effects, whilst the radio absorbing material minimizes unwanted reflections from the walls and ceiling which can influence the measurements. In practice it is relatively easy for shielding to provide high levels (80 dB to 140 dB) of ambient interference rejection, normally making ambient interference negligible.

A turntable is capable of rotation through 360° in the horizontal plane and it is used to support the test sample (DUT) at a suitable height (e.g. 1 m.) above the ground plane. The chamber shall be large enough to allow the measuring distance of at least 3 m or $2(d_1+d_2)^2/\lambda$ (m), whichever is greater (see subclause A.2.5). The distance used in actual measurements shall be recorded with the test results.

The anechoic chamber generally has several advantages over other test facilities. There is minimal ambient interference, minimal floor, ceiling and wall reflections and it is independent of the weather. It does however have some disadvantages which include limited measuring distance and limited lower frequency usage due to the size of the pyramidal absorbers. To improve low frequency performance, a combination structure of ferrite tiles and urethane foam absorbers is commonly used.

All types of emission, sensitivity and immunity testing can be carried out within an anechoic chamber without limitation.

A.1.2 Anechoic chamber with a conductive ground plane

An anechoic chamber with a conductive ground plane is an enclosure, usually shielded, whose internal walls and ceiling are covered with radio absorbing material, normally of the pyramidal urethane foam type. The floor, which is metallic, is not covered and forms the ground plane. The chamber usually contains an antenna mast at one end and a turntable at the other. A typical anechoic chamber with a conductive ground plane is shown in Figure A.2.

This type of test chamber attempts to simulate an ideal Open Area Test Site whose primary characteristic is a perfectly conducting ground plane of infinite extent.

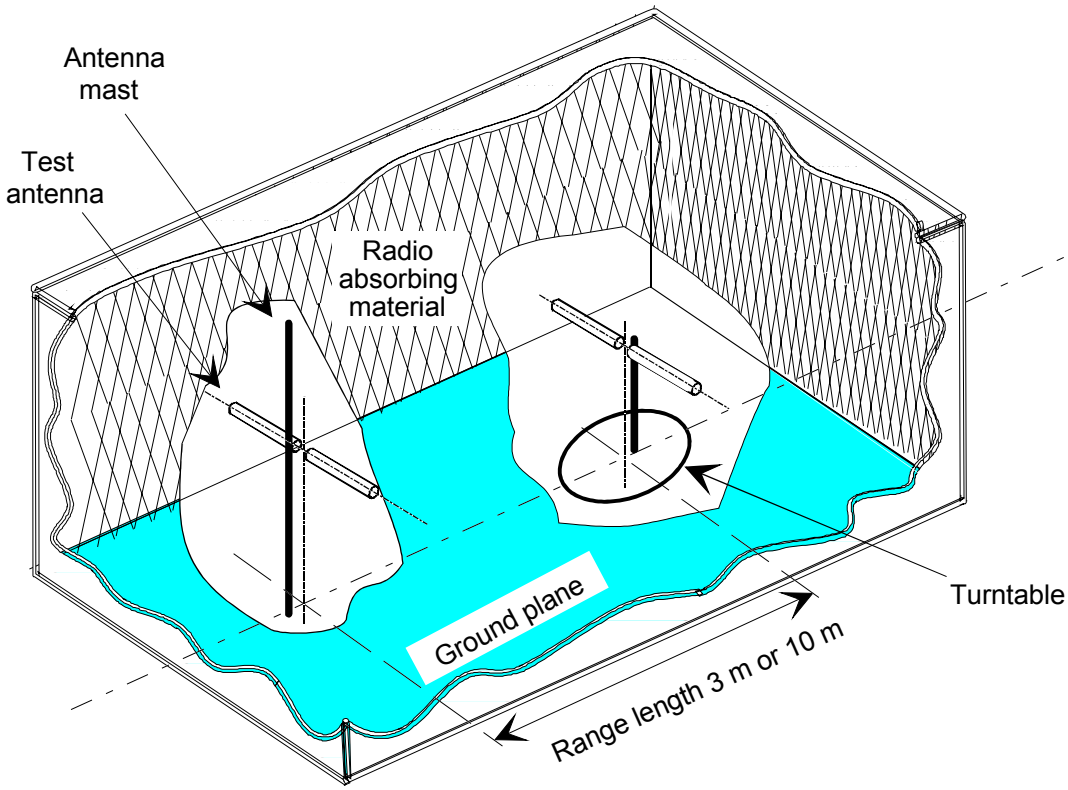

Figure A.2 — A typical anechoic chamber with a conductive ground plane

© ISO/IEC 2008 All rights reserved

Copyright International Organization for Standardization
Provided by IHS under license with ISO
No reproduction or networking permitted without license from IHS
Not for Resale

In this facility the ground plane creates the wanted reflection path, such that the signal received by the receiving antenna is the sum of the signals from both the direct and reflected transmission paths. This creates a unique received signal level for each height of the transmitting antenna (or DUT) and the receiving antenna above the ground plane.

The antenna mast provides a variable height facility (from 1 m to 4 m) so that the position of the test antenna can be optimised for maximum coupled signal between antennas or between a DUT and the test antenna.

A turntable is capable of rotation through 360° in the horizontal plane and it is used to support the test sample (DUT) at a specified height, usually 1,5 m. above the ground plane. The chamber shall be large enough to allow the measuring distance of at least 3 m or $2(d_1+d_2)^2/\lambda$ (m), whichever is greater (see subclause A.2.4). The distance used in actual measurements shall be recorded with the test results.

Emission testing involves firstly “peaking” the field strength from the DUT by raising and lowering the receiving antenna on the mast (to obtain the maximum constructive interference of the direct and reflected signals from the DUT) and then rotating the turntable for a “peak” in the azimuth plane. At this height of the test antenna on the mast, the amplitude of the received signal is noted. Secondly the DUT is replaced by a substitution antenna (positioned at the DUT's phase or volume centre), which is connected to a signal generator. The signal is again 'peaked' and the signal generator output adjusted until the level, noted in stage one, is again measured on the receiving device.

Receiver sensitivity tests over a ground plane also involve 'peaking' the field strength by raising and lowering the test antenna on the mast to obtain the maximum constructive interference of the direct and reflected signals, this time using a measuring antenna which has been positioned where the phase or volume centre of the DUT will be during testing. A transform factor is derived. The test antenna remains at the same height for stage two, during which the measuring antenna is replaced by the DUT. The amplitude of the transmitted signal is reduced to determine the field strength level at which a specified response is obtained from the DUT.

A.1.3 Open area test site (OATS)

An open area test site comprises a turntable at one end and an antenna mast of variable height at the other end above a ground plane, which in the ideal case, is perfectly conducting and of infinite extent. In practice, whilst good conductivity can be achieved, the ground plane size has to be limited. A typical open area test site is shown in Figure A.3.

© ISO/IEC 2008 – All rights reserved
Copyright International Organization for Standardization
Provided by IHS under license with ISO
No reproduction or networking permitted without license from IHS
Not for Resale

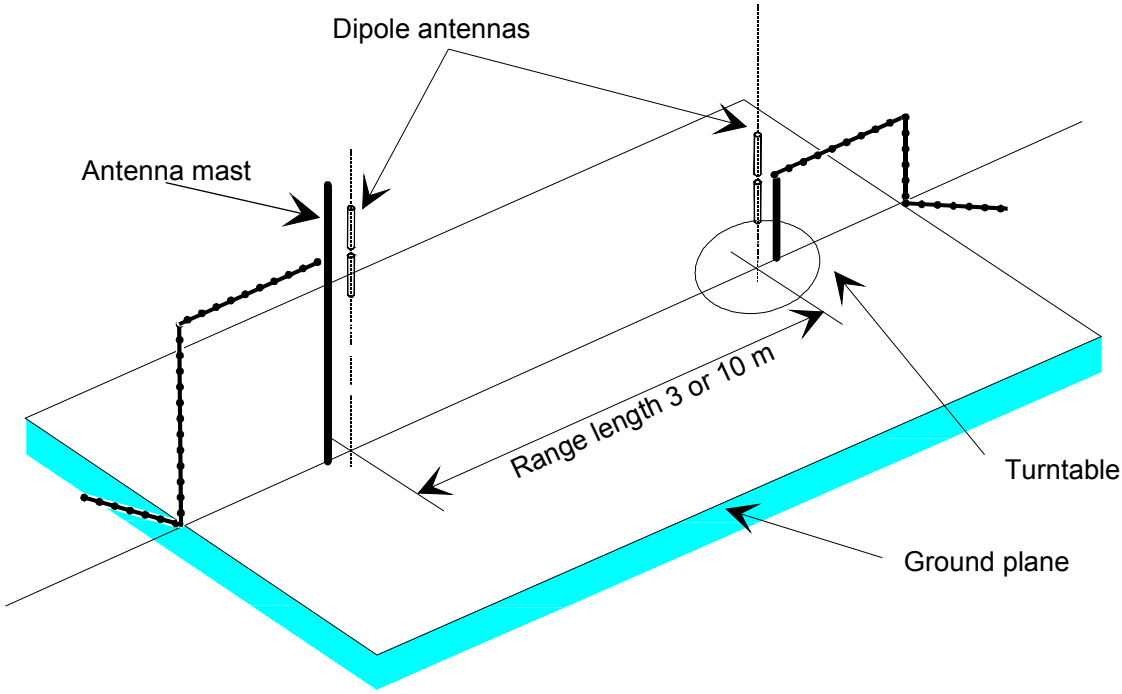

Figure A.3 — A typical open area test site

The ground plane creates a wanted reflection path, such that the signal received by the receiving antenna is the sum of the signals received from the direct and reflected transmission paths. The phasing of these two signals creates a unique received level for each height of the transmitting antenna (or DUT) and the receiving antenna above the ground plane.

Site qualification concerning antenna positions, turntable, measurement distance and other arrangements are same as for anechoic chamber with a ground plane. In radiated measurements an OATS is also used by the same way as anechoic chamber with a ground plane.

Typical measuring arrangement common for ground plane test sites is presented in the Figure A.4.

© ISO/IEC 2008 All rights reserved

Copyright International Organization for Standardization
Provided by IHS under license with ISO
No reproduction or networking permitted without license from IHS
Not for Resale

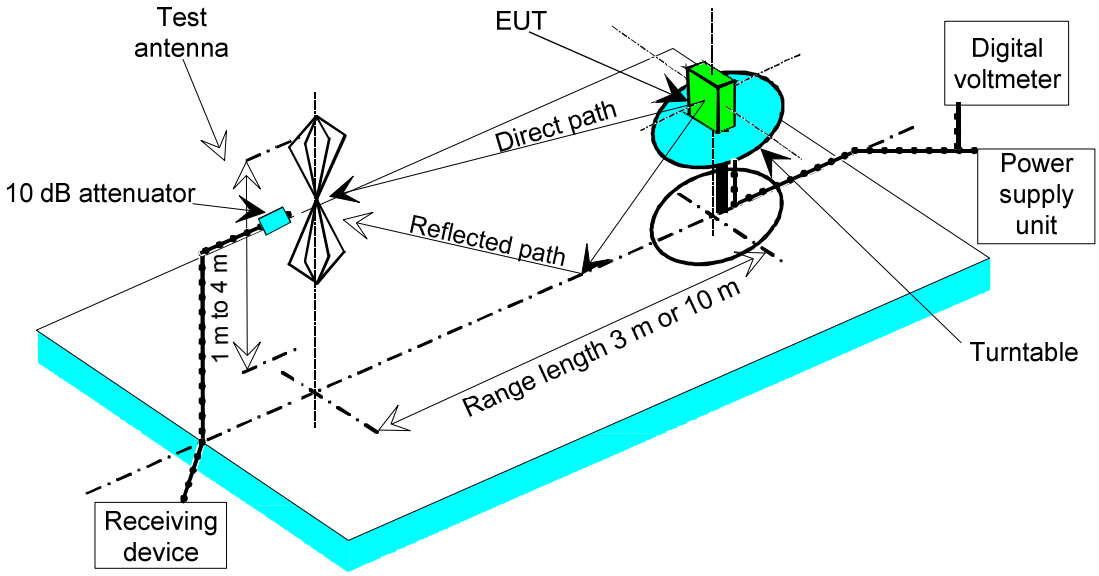

Figure A.4 — Measuring arrangement on ground plane test site (OATS set-up for spurious emission testing)

A.1.4 Test antenna

A test antenna is always used in radiated test methods. In emission tests (i.e. frequency error, effective radiated power, spurious emissions and adjacent channel power) the test antenna is used to detect the field from the DUT in one stage of the measurement and from the substitution antenna in the other stage. When the test site is used for the measurement of receiver characteristics (i.e. sensitivity and various immunity parameters) the antenna is used as the transmitting device.

The test antenna should be mounted on a support capable of allowing the antenna to be used in either horizontal or vertical polarization which, on ground plane sites (i.e. anechoic chambers with ground planes and open area test sites), should additionally allow the height of its centre above the ground to be varied over the specified range (usually 1 to 4 metres).

In the frequency band 30 MHz to 1 000 MHz, dipole antennas (constructed in accordance with ANSI C63.5) are generally recommended. For frequencies of 80 MHz and above, the dipoles should have their arm lengths set for resonance at the frequency of test. Below 80 MHz, shortened arm lengths are recommended. For spurious emission testing, however, a combination of bicones and log periodic dipole array antennas (commonly termed 'log periodics') could be used to cover the entire 30 MHz to 1 000 MHz band. Above 1 000 MHz, waveguide horns are recommended although, again, log periodics could be used.

NOTE: The gain of a horn antenna is generally expressed relative to an isotropic radiator.

A.1.5 Substitution antenna

The substitution antenna is used to replace the DUT for tests in which a transmitting parameter (i.e. frequency error, effective radiated power, spurious emissions and adjacent channel power) is being measured. For measurements in the frequency band 30 MHz to 1 000 MHz, the substitution antenna should be a dipole antenna (constructed in accordance with ANSI C63.5). For frequencies of 80 MHz and above, the dipoles should have their arm lengths set for resonance at the frequency of test. Below 80 MHz, shortened arm lengths are recommended. For measurements above 1 000 MHz, a waveguide horn is recommended. The centre of this antenna should coincide with either the phase centre or volume centre.

© ISO/IEC 2008 – All rights reserved
Copyright International Organization for Standardization
Provided by IHS under license with ISO
No reproduction or networking permitted without license from IHS
Not for Resale

A.1.6 Measuring antenna

The measuring antenna is used in tests on a DUT in which a receiving parameter (i.e. sensitivity and various immunity tests) is being measured. Its purpose is to enable a measurement of the electric filed strength in the vicinity of the DUT. For measurements in the frequency band 30 MHz to 1 000 MHz, the measuring antenna should be a dipole antenna (constructed in accordance with ANSI C63.5). For frequencies of 80 MHz and above, the dipoles should have their arm lengths set for resonance at the frequency of test. Below 80 MHz, shortened arm lengths are recommended. The centre of this antenna should coincide with either the phase centre or volume centre (as specified in the test method) of the DUT.

A.1.7 Stripline arrangement

A.1.7.1 General

The stripline arrangement is a RF coupling device for coupling the integral antenna of an equipment to a 50 Ω radio frequency terminal. This allows the radiated measurements to be performed without an open air test site but in a restricted frequency range. Absolute or relative measurements can be performed; absolute measurements require a calibration of the stripline arrangement.

A.1.7.2 Description

The stripline is made of three highly conductive sheets forming part of a transmission line, which allows the equipment under test to be placed within a known electric field. They shall be sufficiently rigid to support the equipment under test.

Two examples of stripline characteristics are given below:

		IEC 489-3 App. J	FTZ No512 TB 9
Useful frequency range	MHz	1 to 200	0,1 to 4000
Equipment size limits	length	200 mm	1 200 mm
(antenna included):	width	200 mm	1 200 mm
	height	250 mm	400 mm

A.1.7.3 Calibration

The aim of calibration is to establish at any frequency a relationship between the voltage applied by the signal generator and the field strength at the designated test area inside the stripline.

A.1.7.4 Mode of use

The stripline arrangement may be used for all radiated measurements within its calibrated frequency range.

The method of measurement is the same as the method using an open air test site with the following change. The stripline arrangement input socket is used instead of the test antenna.

A.2 Guidance on the use of radiation test sites

This clause details procedures, test equipment arrangements and verification that should be carried out before any of the radiated tests are undertaken. These schemes are common to all types of test sites described in Annex A.

© ISO/IEC 2008 All rights reserved

Copyright International Organization for Standardization
Provided by IHS under license with ISO
No reproduction or networking permitted without license from IHS
Not for Resale

A.2.1 Verification of the test site

No test should be carried out on a test site, which does not possess a valid certificate of verification. The verification procedures for the different types of test sites described in Annex A (i.e. anechoic chamber, anechoic chamber with a ground plane and open area test site) are given in ETSI TR 102 273, Parts 2, 3 and 4, respectively.

A.2.2 Preparation of the DUT

The manufacturer should supply information about the DUT covering the operating frequency, polarization, supply voltage(s) and the reference face. Additional information, specific to the type of DUT should include, where relevant, carrier power, channel separation, whether different operating modes are available (e.g. high and low power modes) and if operation is continuous or is subject to a maximum test duty cycle (e.g. 1 minute on, 4 minutes off).

Where necessary, a mounting bracket of minimal size should be available for mounting the DUT on the turntable. This bracket should be made from low conductivity, low relative dielectric constant (i.e. less than 1,5) material(s) such as expanded polystyrene, balsa wood, etc.

A.2.3 Power supplies to the DUT

All tests should be performed using power supplies wherever possible, including tests on DUT designed for battery-only use. In all cases, power leads should be connected to the DUT's supply terminals (and monitored with a digital voltmeter) but the battery should remain present, electrically isolated from the rest of the equipment, possibly by putting tape over its contacts.

The presence of these power cables can, however, affect the measured performance of the DUT. For this reason, they should be made to be “transparent” as far as the testing is concerned. This can be achieved by routing them away from the DUT and down to the either the screen, ground plane or facility wall (as appropriate) by the shortest possible paths. Precautions should be taken to minimize pick-up on these leads (e.g. the leads could be twisted together, loaded with ferrite beads at 0,15 m spacing or otherwise loaded).

A.2.4 Range length

The range length for all these types of test facility should be adequate to allow for testing in the far-field of the DUT, i.e. it should be equal to or exceed:

$$\frac{2(d_1 + d_2)^2}{\lambda}$$

where:

d_1 is the largest dimension of the DUT/dipole after substitution (m);

d_2 is the largest dimension of the test antenna (m);

λ is the test frequency wavelength (m).

It should be noted that in the substitution part of this measurement, where both test and substitution antennas are half wavelength dipoles, this minimum range length for far-field testing would be:

$$2\lambda$$

It should be noted in the test report when either of these conditions is not met so that the additional measurement uncertainty can be incorporated into the results.

--`,,```,,,,````-`-`,,`,,`,`,,`---
© ISO/IEC 2008 – All rights reserved
Copyright International Organization for Standardization
Provided by IHS under license with ISO
No reproduction or networking permitted without license from IHS
Not for Resale

NOTE 1 For the fully anechoic chamber, no part of the volume of the DUT should, at any angle of rotation of the turntable, fall outside the “quiet zone” of the chamber at the nominal frequency of the test.

NOTE 2 The “quiet zone” is a volume within the anechoic chamber (without a ground plane) in which a specified performance has either been proven by test, or is guaranteed by the designer/manufacture. The specified performance is usually the reflectivity of the absorbing panels or a directly related parameter (e.g. signal uniformity in amplitude and phase). It should be noted however that the defining levels of the quiet zone tend to vary.

NOTE 3 For the anechoic chamber with a ground plane, a full height scanning capability, i.e. 1 to 4 m, should be available for which no part of the test antenna should come within 1 m of the absorbing panels. For both types of Anechoic Chamber, the reflectivity of the absorbing panels should not be worse than -5 dB.

NOTE 4 For both the anechoic chamber with a ground plane and the open area test site, no part of any antenna should come within 0,25 m of the ground plane at any time throughout the tests. Where any of these conditions cannot be met, measurements should not be carried out.

A.2.5 Site preparation

The cables for both ends of the test site should be routed horizontally away from the testing area for a minimum of 2 m (unless, in the case both types of anechoic chamber, a back wall is reached) and then allowed to drop vertically and out through either the ground plane or screen (as appropriate) to the test equipment. Precautions should be taken to minimize pick up on these leads (e.g. dressing with ferrite beads, or other loading). The cables, their routing and dressing should be identical to the verification set-up.

NOTE For ground reflection test sites (i.e. anechoic chambers with ground planes and open area test sites), which incorporate a cable drum with the antenna mast, the 2 m requirement may be impossible to comply with.

Calibration data for all items of test equipment should be available and valid. For test, substitution and measuring antennas, the data should include gain relative to an isotropic radiator (or antenna factor) for the frequency of test. Also, the VSWR of the substitution and measuring antennas should be known.

The calibration data on all cables and attenuators should include insertion loss and VSWR throughout the entire frequency range of the tests. All VSWR and insertion loss figures should be recorded in the log book results sheet for the specific test.

Where correction factors/tables are required, these should be immediately available.

For all items of test equipment, the maximum errors they exhibit should be known along with the distribution of the error e.g.:

— cable loss: ± 0,5 dB with a rectangular distribution;

— measuring receiver: 1,0 dB (standard deviation) signal level accuracy with a Gaussian error distribution.

At the start of measurements, system checks should be made on the items of test equipment used on the test site.

A.3 Coupling of signals

A.3.1 General

The presence of leads in the radiated field may cause a disturbance of that field and lead to additional measurement uncertainty. These disturbances can be minimized by using suitable coupling methods, offering signal isolation and minimum field disturbance (e.g. optical and acoustic coupling).

© ISO/IEC 2008 All rights reserved

Copyright International Organization for Standardization
Provided by IHS under license with ISO
No reproduction or networking permitted without license from IHS
Not for Resale

A.3.2 Data Signals

Isolation can be provided by the use of optical, ultra sonic or infra red means. Field disturbance can be minimized by using a suitable fibre optic connection. Ultra sonic or infra red radiated connections require suitable measures for the minimization of ambient noise.

A.4 Standard test position

The standard position in all test sites, except the stripline arrangement, for equipment which is not intended to be worn on a person, including hand held equipment, shall be on a non conducting support, height 1,5 m, capable of rotating about a vertical axis through the equipment. The standard position of the equipment shall be the following:

a) for equipment with an internal antenna, it shall be placed in the position closest to normal use as declared by the manufacturer;

b) for equipment with a rigid external antenna, the antenna shall be vertical;

c) for equipment with a non rigid external antenna, the antenna shall be extended vertically upwards by a non conducting support.

Equipment, which is intended to be worn on a person, may be tested using a simulated man as support.

The simulated man comprises a rotatable acrylic tube filled with salt water, placed on the ground.

The container shall have the following dimensions:

- Height: 1,7 ± 0,1 m;
- Inside diameter: 300 ± 5 mm;
- Sidewall thickness: 5 ± 0,5 mm.

The container shall be filled with a salt (NaCl) solution of 1,5 g per litre of distilled water.

The equipment shall be fixed to the surface of the simulated man, at the appropriate height for the equipment.

NOTE To reduce the weight of the simulated man it may be possible to use an alternative tube, which has a hollow centre of 220 mm maximum diameter.

In the stripline arrangement the equipment under test or the substitution antenna is placed in the designated test area in the normal operational position, relative to the applied field, on a pedestal made of a low dielectric material (dielectric constant less than 2).

A.5 Test fixture

The test fixture is only needed for the assessment of integral antenna equipment.

A.5.1 Description

The test fixture is a radio frequency coupling device associated with an integral antenna equipment for coupling the integral antenna to a 50 Ω radio frequency terminal at the working frequencies of the equipment under test. This allows certain measurements to be performed using the conducted measurement methods. Only relative measurements may be performed and only those at or near frequencies for which the test fixture has been calibrated.

© ISO/IEC 2008 – All rights reserved
Copyright International Organization for Standardization
Provided by IHS under license with ISO
No reproduction or networking permitted without license from IHS
Not for Resale

In addition, the test fixture may provide:

a) a connection to an external power supply;

b) in the case of assessment of speech equipment, an audio interface either by direct connection or by an acoustic coupler.

In the case of non-speech equipment, the test fixture can also provide the suitable coupling means e.g. for the data output.

The test fixture shall normally be provided by the manufacturer.

The performance characteristics of the test fixture shall be approved by the testing laboratory and shall conform to the following basic parameters:

a) the coupling loss shall not be greater than 30 dB;

b) a coupling loss variation over the frequency range used in the measurement, which does not exceed 2 dB;

c) circuitry associated with the RF coupling shall contain no active or non-linear devices;

d) the VSWR at the 50 Ω socket shall not be more than 1,5 over the frequency range of the measurements;

e) the coupling loss shall be independent of the position of the test fixture and be unaffected by the proximity of surrounding objects or people. The coupling loss shall be reproducible when the equipment under test is removed and replaced;

f) the coupling loss shall remain substantially constant when the environmental conditions are varied.

The characteristics and calibration shall be included in the test report.

A.5.2 Calibration

The calibration of the test fixture establishes a relationship between the output of the signal generator and the field strength applied to the equipment placed in the test fixture.

The calibration is valid only at a given frequency and for a given polarization of the reference field.

The actual set-up used depends on the type of the equipment (e.g. data, speech, etc.).

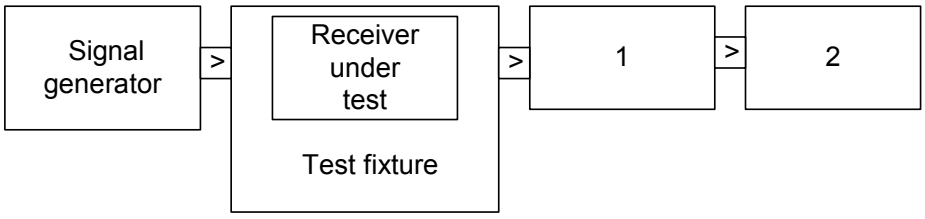

1) Coupling device

2) Device for assessing the performance, e.g. distortion factor, BER measuring device, etc.

Figure A.5 — Measuring arrangement for calibration

© ISO/IEC 2008 All rights reserved

Copyright International Organization for Standardization
Provided by IHS under license with ISO
No reproduction or networking permitted without license from IHS
Not for Resale

Method of calibration:

a) Measure the sensitivity expressed as a field strength, as specified in the present document and note the value of this field strength in dBμV/m and the polarization used.

b) Place the receiver in the test fixture, which is connected to the signal generator. The level of the signal generator producing:

— a bit error ratio of 0,01, or

— a message acceptance ratio of 80 %, as appropriate,

shall be noted.

The calibration of the test fixture is the relationship between the field strength in dBμV/m and the signal generator level in dBμV emf. This relationship is expected to be linear.

A.5.3 Mode of use

The test fixture may be used to facilitate some of the measurements in the case of equipment having an integral antenna.

It is used in particular for the measurement of the radiated carrier power and usable sensitivity expressed as a field strength under extreme conditions.

For the transmitter measurements calibration is not required as relative measuring methods are used.

For the receiver measurements calibration is necessary as absolute measurements are used.

To apply the specified wanted signal level expressed in field strength, convert it into the signal generator level (emf) using the calibration of the test fixture. Apply this value to the signal generator.

--`,,```,,,,````-`-`,,`,,`,`,,`---

© ISO/IEC 2008 – All rights reserved
Copyright International Organization for Standardization
Provided by IHS under license with ISO
No reproduction or networking permitted without license from IHS
Not for Resale

Annex B
(normative)

Command coding for conformance tests for the different types of ISO/IEC 18000-6

B.1 Command coding for type A

B.1.1 Init_round_all command and response

Table B.1 — Init_round_all command format

Protocol extension	Command	SUID flag	Round size	CRC-5
0 hex	0A hex	0 hex	0 hex	Generated according ISO/IEC 18000-6

Table B.2 — Init_round_all response

Preamble	Flags	Tag type	Battery status	Signature	Random number	First n bits of memory	CRC-16
According ISO/IEC 18000-6	0 hex	Any 1 bit value	Any 1 bit value	Any 4 bit value	Any 8 bit value	According ISO/IEC 18000-6	Checked according ISO/IEC 18000-6

B.1.2 Next slot command and response

Table B.3 — Next_slot command format

Protocol extension	Next_slot	Tag signature	CRC-5
0 hex	02 hex	00 hex	Generated according ISO/IEC 18000-6

© ISO/IEC 2008 All rights reserved

Copyright International Organization for Standardization
Provided by IHS under license with ISO
No reproduction or networking permitted without license from IHS
Not for Resale

B.2 Command coding for type B

B.2.1 GROUP_SELECT_EQ command and response

Table B.4 — GROUP_SELECT_EQ command

Preamble	Delimiter	Command	Address	Mask	WORD_DATA	CRC-16
According ISO/IEC 18000-6	Depending on the intended response data rate either Start delimiter 1 or 2 may be used.	00 hex	00 hex	00 hex	00 00 00 00 00 00 00 00 hex	Generated according ISO/IEC 18000-6

Table B.5 — GROUP_SELECT_EQ response

Preamble	ID	CRC-16
According ISO/IEC 18000-6	Any 64 bit identifier	Checked according ISO/IEC 18000-6bits

© ISO/IEC 2008 – All rights reserved
Copyright International Organization for Standardization
Provided by IHS under license with ISO
No reproduction or networking permitted without license from IHS
Not for Resale

Annex C
(normative)

State-transition tables

See ISO/IEC 18000-6, Annex F, Command-Response Tables.

© ISO/IEC 2008 – All rights reserved

Copyright International Organization for Standardization
Provided by IHS under license with ISO
No reproduction or networking permitted without license from IHS
Not for Resale

Annex D
(normative)

Technical performance of the digital oscilloscope

The digital sampling oscilloscope shall be capable of sampling at a rate of at least 100 million samples per second with a resolution of at least 8 bits at optimum scaling when a diode detector mode is available. If a diode detector is not available then an oscilloscope with 1 GHz bandwidth and 5 Gsamples/s shall be used.

The oscilloscope should have the capability to output the sampled data as a text file to facilitate mathematical and other operations such as windowing on the sampled data using external software programmes.

© ISO/IEC 2008 – All rights reserved
Copyright International Organization for Standardization
Provided by IHS under license with ISO
No reproduction or networking permitted without license from IHS
Not for Resale

Annex E
(normative)

Technical performance of the spectrum analyser

It shall be possible, using a resolution bandwidth of 1 kHz, to measure the amplitude of a signal or noise at a level 3 dB or more above the noise level of the spectrum analyser as displayed on the screen, to an accuracy of ±2 dB in the presence of a signal separated in frequency by 10 kHz, at a level 90 dB above that of the signal to be measured.

The reading accuracy of the frequency marker shall be within ±2 % of the sub-band separation.

The accuracy of relative amplitude measurements shall be within ±1 dB.

It shall be possible to adjust the spectrum analyser to allow the separation, on the display, of two components with a frequency difference of 1 kHz.

© ISO/IEC 2008 – All rights reserved

Copyright International Organization for Standardization
Provided by IHS under license with ISO
No reproduction or networking permitted without license from IHS
Not for Resale

Annex F
(normative)

Tag emulator

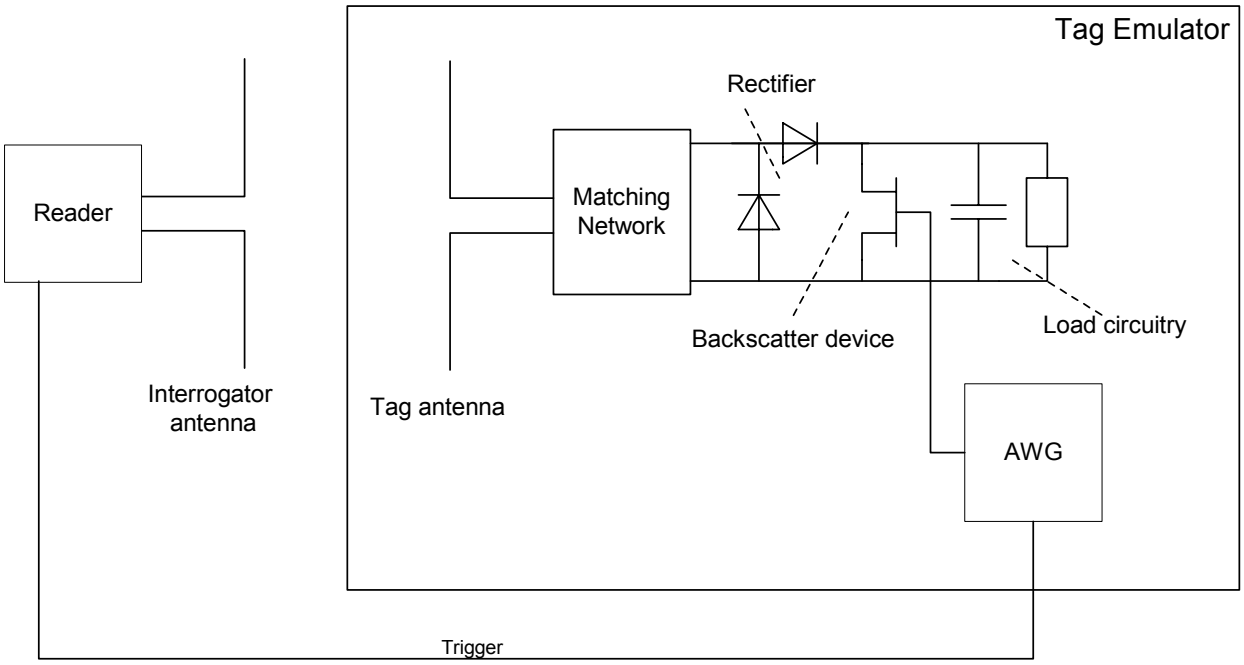

Figure F.1 — Tag emulator with directly coupled AWG

--`,,```,,,,````-`-`,,`,,`,`,,`---

© ISO/IEC 2008 – All rights reserved
Copyright International Organization for Standardization
Provided by IHS under license with ISO
No reproduction or networking permitted without license from IHS
Not for Resale

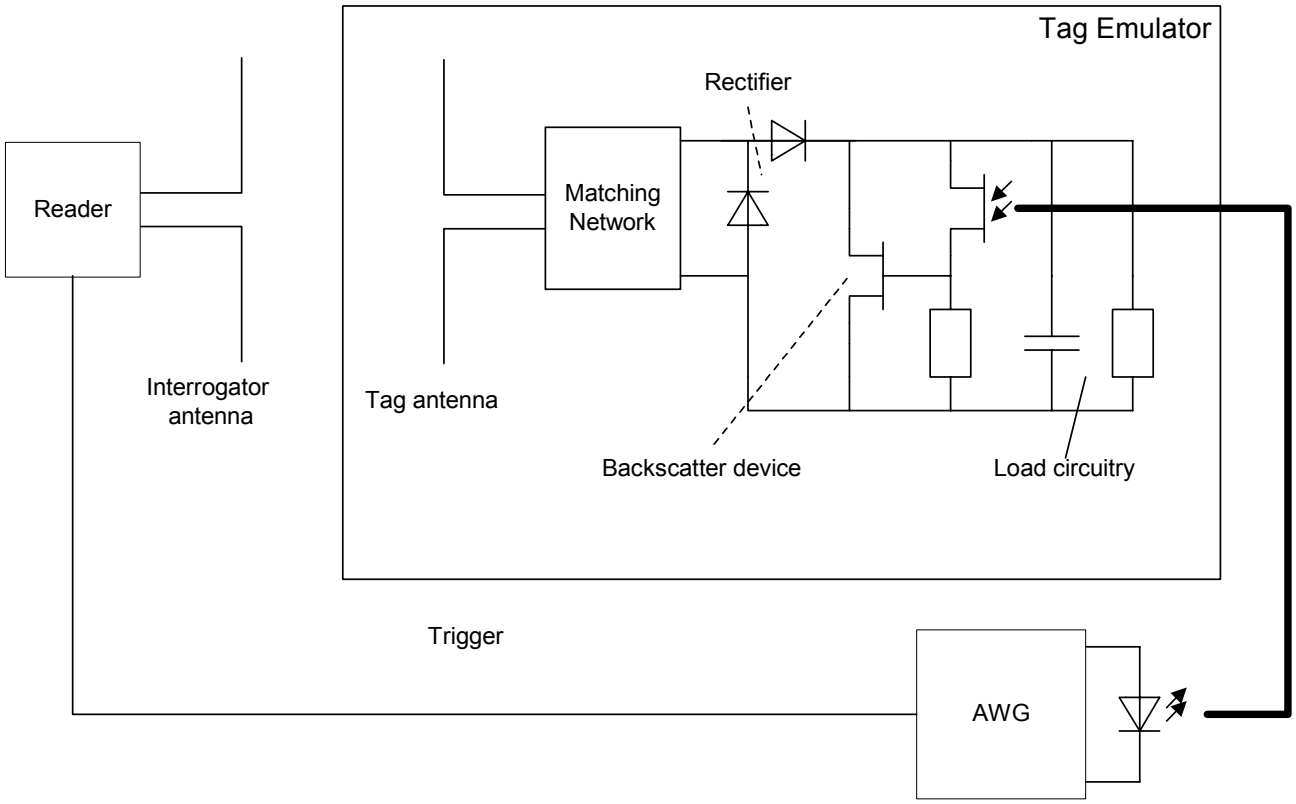

Figure F.2 — Tag emulator with optically coupled AWG

The tag emulator shall have a centre-fed λ/2 dipole antenna according to a test frequency defined in Table 1, connected to a matching network to match to a reference impedance of 40 Ω + j 800 Ω at the used carrier frequency, and are realized either according Figure F.1 or F.2.

The circuitry for the ASIC impedance shall contain a rectifier (e.g. with two Schottky diodes HSMS8202), a tank capacitor of 22 pF (NPO) and a parallel resistor of 2 kΩ.

NOTE It has been beneficial to connect the backscatter device to a photo transistor or to realize it as photo transistor in order to be able to apply the modulation from the arbitrary waveform generator (AWG) with optic plastic fibre and a transmitter diode in order to avoid any influence through electrical coupling.

NOTE In case of direct coupling it has to checked that the AWG output amplitude being the backscatter device control signal does not exceed the amplitude of the signal controlled by the backscatter device.

Upon receipt of a trigger signal that the reader has sent its command, the AWG shall generate the pattern for a response according Table F.1. Instead of the trigger signal the AWG may also have a demodulator or other means to detect the end of the command. Whatever method is used, it shall be ensured that the response from the tag emulator starts after the minimum turn around time of the used operation mode for the test.

Table F.1 — GROUP_SELECT_EQ response

Preamble	Data	CRC-16
According ISO/IEC 18000-6	Any 64 bit data	Checked according ISO/IEC 18000-6bits

The backscatter device shall change its impedance that the tag emulator generates a ΔRCS of 0.005/m^2 as defined in ISO/IEC 18000-6. In order to challenge the interrogator with a typical signal as it could be in the application, additional to ΔRCS also RCS itself should be typical for the applications of ISO/IEC 18000-6.

© ISO/IEC 2008 – All rights reserved

Copyright International Organization for Standardization
Provided by IHS under license with ISO
No reproduction or networking permitted without license from IHS
Not for Resale

Annex G
(informative)

Measurement examples

G.1 Tag response time measurement

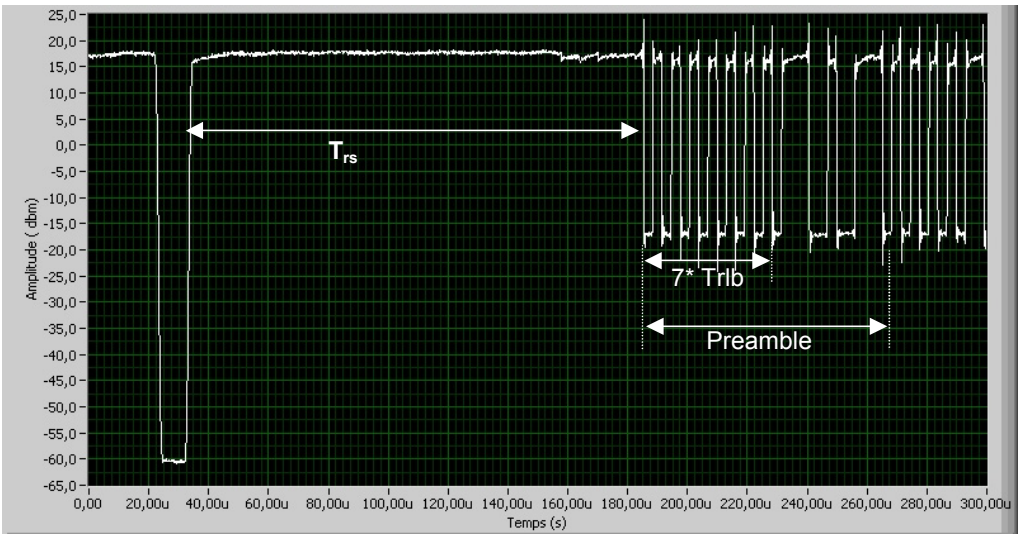

Figure G.1 — Example of screen shot for tags response time measurements

G.2 Tag bit rate accuracy measurement

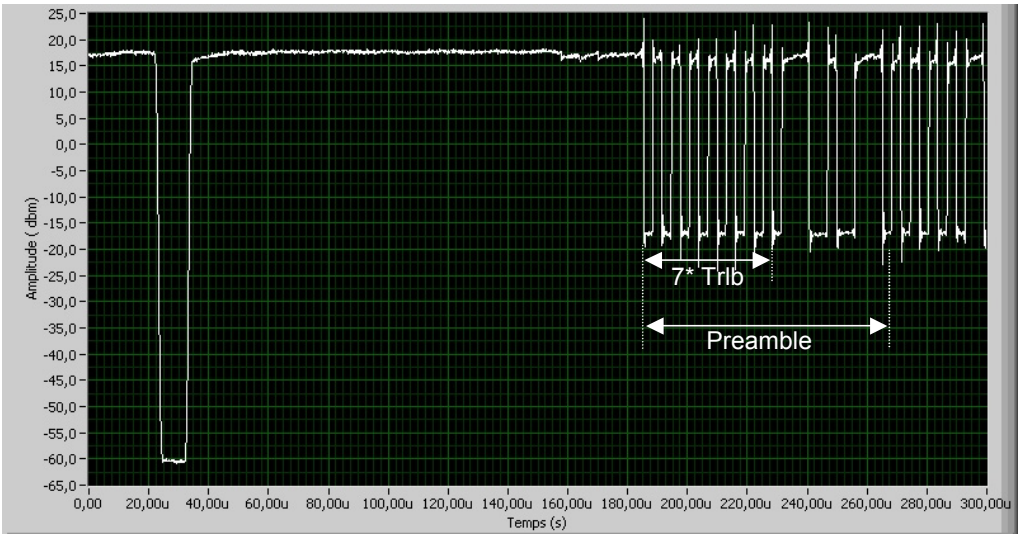

Figure G.2 — Example of screen shot for tag bit rate accuracy measurements

© ISO/IEC 2008 – All rights reserved
Copyright International Organization for Standardization
Provided by IHS under license with ISO
No reproduction or networking permitted without license from IHS
Not for Resale

Annex H
(normative)

Technical performance of the vector signal generator

The vector signal generator shall meet the following requirements:

— Level resolution: 0.1 dB

— Spurious harmonics: < –30 dB

— AM depth: 0 % to 100 %

— AM resolution: 0.1 %

— AM distortion: < 2 %

— AM level accuracy < 0.3 dB

© ISO/IEC 2008 – All rights reserved

Copyright International Organization for Standardization
Provided by IHS under license with ISO
No reproduction or networking permitted without license from IHS
Not for Resale

Annex I
(normative)

Reference antenna

An antenna shall be applicable as reference antenna if the RCS of the antenna is known.

Or any thin linear antenna with know gain and impedance can be used as reference antenna, the RCS shall be calculated according the following formula:

$$RCS = \frac{\lambda^2}{4\pi} \cdot G^2 \left|1 - \Gamma\right|^2$$

where λ is the wavelength calculated at the operating frequency, G the antenna gain and Γ the conjugated matched reflection coefficient.

For matched complex conjugate impedance antenna (Γ =1) the RCS formula can be reduce to

$$RCS = \frac{\lambda^2}{4\pi} \cdot G^2$$

© ISO/IEC 2008 – All rights reserved
Copyright International Organization for Standardization
Provided by IHS under license with ISO
No reproduction or networking permitted without license from IHS
Not for Resale

Bibliography

[1] ISO/IEC 15962, *Information technology — Radio frequency identification (RFID) for item management — Data protocol: data encoding rules and logical memory functions*

[2] ISO/IEC 18046, *Information technology — Automatic identification and data capture techniques — Radio frequency identification device performance test methods*

[3] UHF RFID tag Delta Radar Cross section (ΔRCS) measurement — Saad SKALI — INP-ESISAR Grenoble (France) — May 2008. This document is available for public download under the reference: "rftlab_deltarcs_measurement_reva.pdf" at http://esisar.grenoble-inp.fr/03017554/0/fiche___pagelibre/

[4] ETSI TR 102 273-2, *Electromagnetic compatibilbity and Radio spectrum Matters (ERM); Improvement on Radiated Methods of Measurements (using test site) and evaluation of the corresponding measurement uncertainties; Part 2: Anechoic chamber*

[5] ETSI TR 102 273-3, *Electromagnetic compatibilbity and Radio spectrum Matters (ERM); Improvement on Radiated Methods of Measurements (using test site) and evaluation of the corresponding measurement uncertainties; Part 3: Anechoic chamber with a ground plane*

[6] ETSI TR 102 273-4, *Electromagnetic compatibilbity and Radio spectrum Matters (ERM); Improvement on Radiated Methods of Measurements (using test site) and evaluation of the corresponding measurement uncertainties; Part 4: Open area test site*

© ISO/IEC 2008 – All rights reserved

Copyright International Organization for Standardization
Provided by IHS under license with ISO
No reproduction or networking permitted without license from IHS
Not for Resale

ICS 35.040

Price based on 59 pages

© ISO/IEC 2008 – All rights reserved
Copyright International Organization for Standardization
Provided by IHS under license with ISO
No reproduction or networking permitted without license from IHS
Not for Resale