TECHNICAL REPORT

ISO/IEC TR 18047-3

First edition
2004-09-01

Information technology — Radio frequency identification device conformance test methods —

Part 3: Test methods for air interface communications at 13,56 MHz

Technologies de l'information — Méthodes d'essai de conformité du dispositif d'identification de radiofréquence —

Partie 3: Méthodes d'essai pour des communications d'une interface d'air à 13,56 MHz

Reference number
ISO/IEC TR 18047-3:2004(E)

© ISO/IEC 2004

--`,,,,,,-`-`,,`,,`,`,,`---

Copyright International Organization for Standardization
Reproduced by IHS under license with ISO
No reproduction or networking permitted without license from IHS

Not for Resale

PDF disclaimer

This PDF file may contain embedded typefaces. In accordance with Adobe's licensing policy, this file may be printed or viewed but shall not be edited unless the typefaces which are embedded are licensed to and installed on the computer performing the editing. In downloading this file, parties accept therein the responsibility of not infringing Adobe's licensing policy. The ISO Central Secretariat accepts no liability in this area.

Adobe is a trademark of Adobe Systems Incorporated.

Details of the software products used to create this PDF file can be found in the General Info relative to the file; the PDF-creation parameters were optimized for printing. Every care has been taken to ensure that the file is suitable for use by ISO member bodies. In the unlikely event that a problem relating to it is found, please inform the Central Secretariat at the address given below.

© ISO/IEC 2004

All rights reserved. Unless otherwise specified, no part of this publication may be reproduced or utilized in any form or by any means, electronic or mechanical, including photocopying and microfilm, without permission in writing from either ISO at the address below or ISO's member body in the country of the requester.

ISO copyright office
Case postale 56 • CH-1211 Geneva 20
Tel. + 41 22 749 01 11
Fax + 41 22 749 09 47
E-mail copyright@iso.org
Web www.iso.org

Published in Switzerland

Copyright International Organization for Standardization
Reproduced by IHS under license with ISO
No reproduction or networking permitted without license from IHS

Not for Resale

© ISO/IEC 2004 – All rights reserved

Contents

Page

Foreword ... iv

Introduction ... v

1 Scope ... 1

2 Normative references ... 1

3 Terms and definitions ... 2

4 Symbols and abbreviated terms ... 2

5 Conformance tests for ISO/IEC 18000-3 — 13,56 MHz ... 3
5.1 General ... 3
5.2 Default conditions applicable to the test methods ... 3
5.2.1 Test environment ... 3
5.2.2 Pre-conditioning ... 3
5.2.3 Default tolerance ... 3
5.2.4 Spurious inductance ... 3
5.2.5 Total measurement uncertainty ... 3
5.3 Conformance tests for ISO/IEC 18000-3 Mode 1 ... 3
5.3.1 General ... 3
5.3.2 Test apparatus and test circuits ... 3
5.3.3 Functional test – tag ... 7
5.3.4 Functional test – interrogator ... 8
5.4 Conformance tests for ISO/IEC 18000-3 Mode 2 ... 9
5.4.1 General ... 9
5.4.2 Test apparatus and test circuits ... 10
5.4.3 Functional test – tag ... 11
5.4.4 Functional test – interrogator ... 12

Annex A (normative) **Test setup parameters and dimensions for tags smaller than or equal to an ISO/IEC 7810 ID-1 outline** ... 13

Annex B (normative) **Guideline for RFID tags larger than ISO/IEC 7810 ID-1 size** ... 15

Annex C (normative) **Test interrogator antenna** ... 19

Annex D (informative) **Test interrogator antenna tuning** ... 22

Annex E (normative) **Sense coil** ... 24

Annex F (normative) **Reference tag for interrogator power test** ... 26

Annex G (informative) **Reference tag for load modulation test** ... 28

Annex H (informative) **Program for evaluation of the spectrum** ... 29

Bibliography ... 33

© ISO/IEC 2004 All rights reserved

Copyright International Organization for Standardization
Reproduced by IHS under license with ISO
No reproduction or networking permitted without license from IHS
Not for Resale

Foreword

ISO (the International Organization for Standardization) and IEC (the International Electrotechnical Commission) form the specialized system for worldwide standardization. National bodies that are members of ISO or IEC participate in the development of International Standards through technical committees established by the respective organization to deal with particular fields of technical activity. ISO and IEC technical committees collaborate in fields of mutual interest. Other international organizations, governmental and non-governmental, in liaison with ISO and IEC, also take part in the work. In the field of information technology, ISO and IEC have established a joint technical committee, ISO/IEC JTC 1.

International Standards are drafted in accordance with the rules given in the ISO/IEC Directives, Part 2.

The main task of the joint technical committee is to prepare International Standards. Draft International Standards adopted by the joint technical committee are circulated to national bodies for voting. Publication as an International Standard requires approval by at least 75 % of the national bodies casting a vote.

In exceptional circumstances, the joint technical committee may propose the publication of a Technical Report of one of the following types:

— type 1, when the required support cannot be obtained for the publication of an International Standard, despite repeated efforts;

— type 2, when the subject is still under technical development or where for any other reason there is the future but not immediate possibility of an agreement on an International Standard;

— type 3, when the joint technical committee has collected data of a different kind from that which is normally published as an International Standard ("state of the art", for example).

Technical Reports of types 1 and 2 are subject to review within three years of publication, to decide whether they can be transformed into International Standards. Technical Reports of type 3 do not necessarily have to be reviewed until the data they provide are considered to be no longer valid or useful.

Attention is drawn to the possibility that some of the elements of this document may be the subject of patent rights. ISO and IEC shall not be held responsible for identifying any or all such patent rights.

ISO/IEC TR 18047-3, which is a Technical Report of type 2, was prepared by Joint Technical Committee ISO/IEC JTC 1, *Information technology*, Subcommittee SC 31, *Automatic identification and data capture techniques*.

ISO/IEC TR 18047 consists of the following parts, under the general title *Information technology — Radio frequency identification device conformance test methods*:

— *Part 3: Test methods for air interface communications at 13,56 MHz*

— *Part 4: Test methods for air interface communications at 2,45 GHz*

Test methods for air interface communications below 135 kHz, at 860 MHz to 960 MHz, and at 433 MHz will form the subjects of future Parts 2, 6 and 7, respectively.

© ISO/IEC 2004 – All rights reserved
Copyright International Organization for Standardization
Reproduced by IHS under license with ISO
No reproduction or networking permitted without license from IHS
Not for Resale

Introduction

ISO/IEC 18000 defines the air interfaces for radio frequency identification (RFID) devices used in item management applications. Part 3 of ISO/IEC 18000 defines the air interface for these devices operating in the 13,56 MHz Industrial, Scientific, and Medical (ISM) band and used in these applications.

The purpose of ISO/IEC TR 18047 is to provide test methods for conformance with the various parts of ISO/IEC 18000.

Each part of ISO/IEC TR 18047 contains all measurements required to be made on a product in order to establish whether it conforms with the corresponding part of ISO/IEC 18000. For ISO/IEC TR 18047-3, each product needs to be assessed following either the procedure defined for Mode 1 or for Mode 2.

© ISO/IEC 2004 All rights reserved

Copyright International Organization for Standardization
Reproduced by IHS under license with ISO
No reproduction or networking permitted without license from IHS
Not for Resale

Copyright International Organization for Standardization
Reproduced by IHS under license with ISO
No reproduction or networking permitted without license from IHS
Not for Resale

Information technology — Radio frequency identification device conformance test methods —

Part 3:
Test methods for air interface communications at 13,56 MHz

1 Scope

This part of ISO/IEC TR 18047 defines test methods for determining the conformance of radio frequency identification devices (tags and interrogators) for item management with the specifications given in the corresponding part of ISO/IEC 18000, but does not apply to the testing of conformity with regulatory or similar requirements.

The test methods require only that the mandatory functions, and any optional functions which are implemented, be verified. This may, in appropriate circumstances, be supplemented by further, application-specific functionality criteria that are not available in the general case.

This part of ISO/IEC TR 18047 includes the following interrogator and tag conformance parameters:

— mode-specific conformance parameters including nominal values and tolerances; and

— parameters that apply directly affecting system functionality and inter-operability.

This part of ISO/IEC TR 18047 does not include the following:

— parameters that are already included in regulatory test requirements; and

— high-level data encoding conformance test parameters (these are specified in ISO/IEC 15962).

Clause 5 describes all necessary conformance tests, while clause 5.3 applies to Mode 1 products only and clause 5.4 applies to Mode 2 products only.

2 Normative references

The following referenced documents are indispensable for the application of this document. For dated references, only the edition cited applies. For undated references, the latest edition of the referenced document (including any amendments) applies.

ISO/IEC 7810, *Identification cards — Physical characteristics*

ISO/IEC 18000-1, *Information technology — Radio frequency identification for item management — Part 1: Reference architecture and definition of parameters to be standardized* [1)]

ISO/IEC 18000-3, *Information technology — Radio frequency identification for item management — Part 3: Parameters for air interface communications at 13,56 MHz* [1)]

ISO/IEC 19762 (all parts), *Information technology — Automatic identification and data capture techniques — Harmonized vocabulary* [1)]

1) To be published.

© ISO/IEC 2004 All rights reserved

Copyright International Organization for Standardization
Reproduced by IHS under license with ISO
No reproduction or networking permitted without license from IHS
Not for Resale

3 Terms and definitions

For the purposes of this document, the terms and definitions given in ISO/IEC 19762 (all parts) apply.

4 Symbols and abbreviated terms

ar	reference tag width
asp	air spacing
br	reference tag height
ca	calibration coil width
cb	calibration coil height
co	calibration coil corner radius
dis	distance between test interrogator antenna and sense coils
DUT	device under test
fc	frequency of the operating field
fs	frequency of sub-carrier
H_{max}	maximum field strength of the interrogator antenna field
H_{min}	minimum field strength of the interrogator antenna field
lx	length of test interrogator assembly connection cable
lya	test interrogator and sense coil PCB width
lyb	test interrogator and sense coil PCB height
lyd	test interrogator coil diameter
lyw	test interrogator coil track width
nr	number of turns of reference tag
oa	calibration coil outline width
ob	calibration coil outline height
PCB	printed circuit board
rs	sense coil corner radius
sa	sense coil width
sb	sense coil height
sr	reference tag track spacing
wr	reference tag track width

© ISO/IEC 2004 – All rights reserved
Copyright International Organization for Standardization
Reproduced by IHS under license with ISO
No reproduction or networking permitted without license from IHS
Not for Resale

5 Conformance tests for ISO/IEC 18000-3 — 13,56 MHz

5.1 General

This part of ISO/IEC TR 18047 specifies a series of tests to determine the conformance of interrogators and tags. The results of these tests shall be compared with the values of the parameters specified in ISO/IEC 18000-3 to determine whether the interrogator or tag under test conforms.

Unless otherwise specified, the tests in this document shall be applied exclusively to RFID tags and interrogators defined in ISO/IEC 18000 Part 3 Mode 1 and Mode 2.

5.2 Default conditions applicable to the test methods

5.2.1 Test environment

Unless otherwise specified, testing shall take place in an environment of temperature 23 °C +/- 3 °C (73 °F +/- 5 °F) and of relative humidity 40 % to 60 %.

5.2.2 Pre-conditioning

Where pre-conditioning is required by the test method, the identification tags to be tested shall be conditioned to the test environment for a period of 24 h before testing.

5.2.3 Default tolerance

Unless otherwise specified, a default tolerance of +/- 5 % shall be applied to the quantity values given to specify the characteristics of the test equipment (e.g. linear dimensions) and the test method procedures (e.g. test equipment adjustments).

5.2.4 Spurious inductance

Resistors and capacitors should have negligible inductance.

5.2.5 Total measurement uncertainty

The total measurement uncertainty for each quantity determined by these test methods shall be stated in the test report.

NOTE Basic information is given in “ISO Guide to the Expression of Uncertainty in Measurement”, ISBN 92-67-10188-9, 1993.

5.3 Conformance tests for ISO/IEC 18000-3 Mode 1

5.3.1 General

The conformance tests for ISO/IEC 18000-3 mode 1 are described independent of the tag size. For tests of tags smaller or equal to ID-1 (as defined in ISO/IEC 7810) all dimensions are specified in Annex A, while Annex B applies to larger tags.

5.3.2 Test apparatus and test circuits

This clause defines the test apparatus and test circuits for verifying the operation of a tag or an interrogator according to the base standard, ISO/IEC 18000-3. The test apparatus includes:

- Calibration coil (see 5.3.2.1)
- Test interrogator assembly (see 5.3.2.2)
- Reference tag (see 5.3.2.4)
- Digital sampling oscilloscope (see 5.3.2.5).

These are described in the following clauses.

--`,,,,,,,,-`-`,,`,,`,`,,`---

© ISO/IEC 2004 All rights reserved

Copyright International Organization for Standardization
Reproduced by IHS under license with ISO
No reproduction or networking permitted without license from IHS
Not for Resale

5.3.2.1 Calibration coil

This clause defines the size, thickness and characteristics of the calibration coil PCB.

5.3.2.1.1 Size of the Calibration coil

The calibration coil PCB consists of an area, which has the height and width defined in Figure 1 containing a single turn coil concentric with the tag outline.

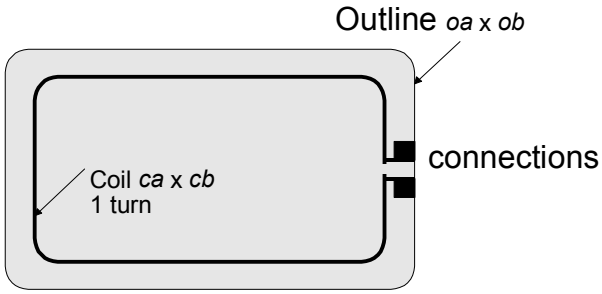

Figure 1 — Example calibration coil

5.3.2.1.2 Thickness and material of the calibration coil substrate

The thickness of the calibration coil PCB shall be 0,76 mm +/- 10 %. It shall be constructed of a suitable insulating material such as FR4 or equivalent.

5.3.2.1.3 Coil characteristics

The coil on the calibration coil PCB shall have one turn. The outer size of the coil shall be as defined in Figure 1 with a corner radius *co*.

The coil is made as a printed coil on PCB plated with 35 µm copper. Track width shall be 500 µm +/- 20 %. The size of the connection pads shall be 1,5 mm × 1,5 mm.

A high impedance oscilloscope probe (e.g. >1 MΩ, <14 pF) shall be used to measure the open circuit voltage in the coil. The resonant frequency of the whole set (calibration coil, connecting leads and probe) shall be above 60 MHz.

5.3.2.2 Test interrogator assembly

The test interrogator assembly for load modulation consists of an interrogator antenna and two parallel sense coils: sense coil A and sense coil B. The test set-up is shown in Figure 2. The sense coils are connected such that the signal from one coil is in opposite phase to the other. The 50 Ω potentiometer P1 serves to fine adjust the balance point when the sense coils are not loaded by a tag or any magnetically coupled circuit. The capacitive load of the probe including its parasitic capacitance shall be less than 14pF.

IMPORTANT The capacitance of the connections and oscilloscope probe should be kept to a minimum for reproducibility.

© ISO/IEC 2004 – All rights reserved
Copyright International Organization for Standardization
Reproduced by IHS under license with ISO
No reproduction or networking permitted without license from IHS
Not for Resale

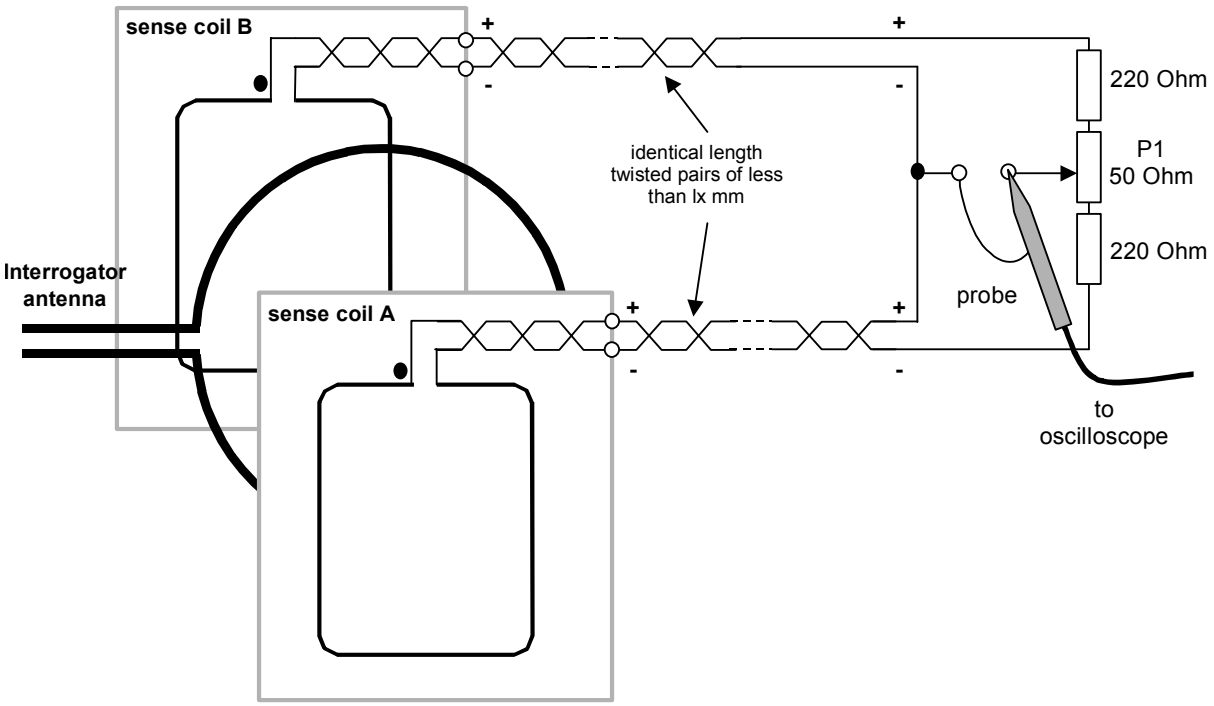

Figure 2 — Example test set-up

5.3.2.2.1 Test interrogator antenna

The test interrogator antenna shall have a diameter and a construction conforming with the drawings in Annex C. The tuning of the antenna may be accomplished with the procedure given in Annex D.

5.3.2.2.2 Sense coils

The size and the sense coil construction shall conform with the drawings in Annex E.

5.3.2.3 Assembly of test interrogator

The sense coils and test interrogator antenna shall be assembled parallel to each other. The sense and antenna coils shall be coaxial and the distance between the active conductors shall be as defined in Figure 3. The distance between the coil in the DUT and the coil of the test interrogator antenna shall be equal to the distance between the calibration coil and the coil of the test interrogator antenna.

© ISO/IEC 2004 All rights reserved
Copyright International Organization for Standardization
Reproduced by IHS under license with ISO
No reproduction or networking permitted without license from IHS
Not for Resale

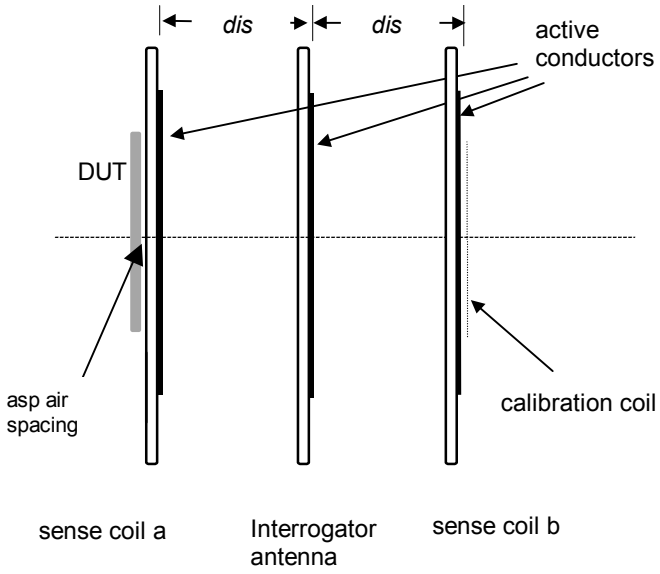

NOTE The asp air spacing avoids parasitic effects such as detuning by closer spacing or ambiguous results due to noise and other environmental effects.

Figure 3 — Test interrogator assembly

5.3.2.4 Reference tags

Reference tags are defined

- to test H_{min} and H_{max} produced by an interrogator (under conditions of loading by a tag) and thus to test the ability of an interrogator to power a tag
- to generate the minimum tag reply load modulation signal.

5.3.2.4.1 Reference tag for interrogator power

The schematic for the power test is shown in Annex F. Power dissipation can be set by the resistor R1 or R2, in order to measure H_{min} and H_{max} respectively as defined in clause 5.3.4.1.2. The resonant frequency can be adjusted with C2.

5.3.2.4.2 Reference tag for load modulation reception test

A suggested schematic for the load modulation reception test is shown in Annex G. The load modulation can be chosen to be resistive or reactive.

This reference tag is calibrated by using the test interrogator assembly as follows:

The reference tag is placed in the position of the DUT. The load modulation signal amplitude is measured as described in clause 5.3.3. This amplitude should correspond to the minimum amplitude at all values of field strength required by the base standard, ISO/IEC 18000-3.

5.3.2.4.3 Dimensions of the reference tags

The reference tag which is used for the measurements has to be described in the measurement report. Figure 4 shows as an example an ISO card sized reference tag which consists of an area containing a coil which has the same height and width as those defined in ISO/IEC 7810 for ID-1 type.

An area external to this, containing the circuitry that emulates the required tag functions, is appended so as to allow insertion into the test set-ups described below and so as to cause no interference to the tests.

© ISO/IEC 2004 – All rights reserved
Copyright International Organization for Standardization
Reproduced by IHS under license with ISO
No reproduction or networking permitted without license from IHS
Not for Resale

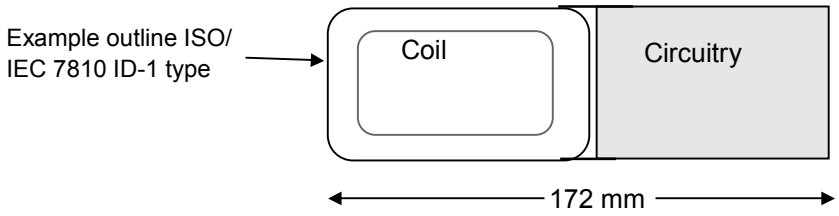

Figure 4 — Example of an ISO card sized reference tag

5.3.2.4.4 Thickness of the reference tag board

The thickness of the reference tag active area shall be 0,76 mm +/- 10 %.

5.3.2.4.5 Coil characteristics

The coil in the active area of the reference tag shall have *nr* turns and shall be concentric with the area outline.

The outer size of the coils shall be *ar* x *br*.

The coil is printed on PCB plated with 35 µm copper.

Track width shall be *wr* and spacing shall be *sr*.

5.3.2.5 Digital sampling oscilloscope

The digital sampling oscilloscope shall be capable of sampling at a rate of at least 100 million samples per second with a resolution of at least 8 bits at optimum scaling. The oscilloscope should have the capability to output the sampled data as a text file to facilitate mathematical and other operations such as windowing on the sampled data using external software programmes. An example of the programme is shown in Annex H.

5.3.3 Functional test – tag

5.3.3.1 Purpose

The purpose of this test is to determine the amplitude of the tag load modulation signal within the operating field range [H_{min}, H_{max}] as specified in the base standard, ISO/IEC 18000-3 and the functionality of the tag with the modulation under emitted fields as defined in ISO/IEC 18000-3 parameter table for tag to interrogator link (reference M1-Tag:7).

5.3.3.2 Test procedure

Step 1: The load modulation test circuit of Figure 2 and the test interrogator assembly of Figure 3 are used.

The RF power delivered by the signal generator to the test interrogator antenna shall be adjusted to produce the required field strength (H_{min} and H_{max}) and modulation waveforms defined in ISO/IEC 18000-3 as measured by the calibration coil without any tag. The output of the load modulation test circuit of Figure 2 is connected to a digital sampling oscilloscope. The 50 Ω potentiometer P1 shall be trimmed to minimise the residual carrier. This signal shall be at least 40 dB lower than the signal obtained by shorting one sense coil.

Step 2: The tag under test shall be placed in the DUT position, concentric with sense coil A. The RF drive into the test interrogator antenna shall be re-adjusted to the required field strength.

IMPORTANT Care should be taken to apply a proper synchronization method for low amplitude load modulation.

Exactly two sub-carrier cycles of the sampled modulation waveform shall be Fourier transformed. A discrete Fourier transformation with a scaling such that a pure sinusoidal signal results in its peak magnitude shall be used. To minimize transient effects, a sub-carrier cycle immediately following a non-modulating period must

© ISO/IEC 2004 All rights reserved

Copyright International Organization for Standardization
Reproduced by IHS under license with ISO
No reproduction or networking permitted without license from IHS
Not for Resale

be avoided. In case of two sub-carrier frequencies this procedure shall be repeated for the second sub-carrier frequency.

The resulting amplitudes of the upper sideband(s) at *fc + fs1* (and *fc + fs2* if both are present*)* and the lower sideband(s) at *fc - fs1 (*and *fc - fs2,* if present*)* respectively shall be above the value defined in the base standard, ISO/IEC 18000-3.

An appropriate command sequence as defined in the base standard, ISO/IEC 18000-3 shall be sent by the test interrogator to obtain a signal or load modulation response from the tag.

5.3.3.3 Test report

The test report shall give the measured amplitudes of the upper sideband(s) at *fc + fs1 (*and *fc + fs, if present)* and the lower sideband(s) at *fc - fs1* (and *fc - fs2, if present)* and the applied fields and modulations. The pass/fail condition is determined by the values defined in ISO/IEC 18000-3 parameter table for tag to interrogator link (reference M1-Tag:7).

5.3.4 Functional test — interrogator

5.3.4.1 Interrogator field strength and power transfer

5.3.4.1.1 Purpose

This test measures the field strength produced by an interrogator with its specified antenna in its operating volume as defined in accordance with the base standard, ISO/IEC 18000-3. The test procedure of clause 5.3.4.1.2 is also used to determine that the interrogator with its specified antenna generates a field not higher than the value specified in ISO/IEC 18000-3 parameter table for interrogator to tag link (reference M1-Int:3 for H_{max} and reference M1-Int:3a for H_{min}).

This test uses a reference tag as defined in Annex F to determine that a specific interrogator to be tested is able to supply a certain power to a tag placed anywhere within the defined operating volume.

5.3.4.1.2 Test procedure

Procedure for H_{max} test:

1. Tune the reference tag to 13,56 MHz.

NOTE The resonant frequency of the reference tag is measured by using an impedance analyser or a LCR-meter connected to a calibration coil. The coil of the reference tag should be placed at a distance of 10 mm from the calibration coil, with the axes of the two coils being congruent. The resonant frequency is that frequency at which the resistive part of the measured complex impedance is at maximum.

2. Set Jumper J1 to position b to activate R2 .

3. Sweep the reference tag coaxially with the antenna through the defined operating volume of the interrogator under test at a maximum rate of 1 cm/s.

4. The DC voltage (V_{DC}) across resistor R3 (Annex F) is measured with a high impedance voltmeter and shall not exceed 3 V where the load resistor parallel to the coil L is set to R2 and the field strength equals H_{max}.

Procedure for H_{min} test:

1. Tune the reference tag to 13,56 MHz.

2. Set Jumper J1 to position a to activate R1.

3. Sweep the reference tag coaxially with the antenna through the defined operating volume of the interrogator under test at a maximum rate of 1 cm/s.

4. The DC voltage (V_{DC}) across resistor R3 is measured with a high impedance voltmeter and shall exceed 3 V where the load resistor parallel to the coil L is set to R1 and the field strength equals H_{min}.

--`,,,,,,-`-`,,`,,`,`,,`---

© ISO/IEC 2004 – All rights reserved
Copyright International Organization for Standardization
Reproduced by IHS under license with ISO
No reproduction or networking permitted without license from IHS
Not for Resale

5.3.4.1.3 Test report

The test report shall give the measured values for V_{DC} at H_{min} and H_{max} under the defined conditions. The pass/fail condition is determined by the values defined in ISO/IEC 18000-3 parameter table for interrogator to tag link (reference M1-Int:3 for H_{max} and reference M1-Int:3a for H_{min}).

5.3.4.2 Modulation index and waveform

5.3.4.2.1 Purpose

This test is used to determine the index of modulation of the interrogator field as well as the rise and fall times and the overshoot values as defined in ISO/IEC 18000-3 M1-Int:7d parameter table for interrogator to tag link (reference M1-Int:7, reference M1-Int:7d, figure M1-1 and figure M1-2) within the defined operating volume.

5.3.4.2.2 Test procedure

The calibration coil is positioned anywhere within the defined operating volume, and the modulation index and waveform characteristics are determined from the induced voltage on the coil displayed on a suitable oscilloscope.

5.3.4.2.3 Test report

The test report shall give the measured modulation index of the interrogator field, the rise and fall times and the overshoot values within the defined operating volume. The pass/fail condition is determined by the values defined in ISO/IEC 18000-3 parameter table for interrogator to tag link (reference M1-Int:7, reference M1-Int:7d, figure M1-1 and figure M1-2).

5.3.4.3 Load modulation reception (informative only)

This is an indirect test of the ability of the interrogator to receive a minimum signal from the tag. This test verifies that an interrogator correctly detects the load modulation of a tag that conforms to the base standard, ISO/IEC 18000-3. It is supposed that the interrogator has means to indicate correct reception of the sub-carrier(s) produced by a test tag.

Annex G shows a circuit which can be used in conjunction with the test apparatus to determine the sensitivity of an interrogator to load modulation within the defined operating volume.

The pass/fail condition is determined by the values defined in ISO/IEC 18000-3 parameter table for tag to interrogator link (reference M1-Tag:7). Failure under this criterion shall not be interpreted as failure of conformance for an otherwise conforming interrogator.

5.4 Conformance tests for ISO/IEC 18000-3 Mode 2

5.4.1 General

The conformance tests for ISO/IEC 18000-3 Mode 2 are described independent of the tag size. For tests of tags smaller than or equal to ID-1 all dimensions are specified in Annex A, while Annex B applies for all other cases.

The manufacturer shall specify the tag H_{max} and H_{min} and the minimum tag reply load modulation at H_{max} and H_{min}.

The tag reply load modulation is measured as described in 5.4.3.2.

IMPORTANT Due to field strengths applicable in current 13,56 MHz RFID systems, tags should be capable of handling field strengths of up to 12 A/m.

--`,,,,,,-`-`,,`,,`,`,,`---
© ISO/IEC 2004 All rights reserved
Copyright International Organization for Standardization
Reproduced by IHS under license with ISO
No reproduction or networking permitted without license from IHS
Not for Resale

5.4.2 Test apparatus and test circuits

This clause defines the test apparatus and test circuits for verifying the operation of a tag or an interrogator according to the base standard, ISO/IEC 18000-3. The test apparatus includes:

— Calibration coil

— Test interrogator assembly

— Reference tags.

These are described in the following clauses.

5.4.2.1 Calibration coil

See 5.3.2.1.

5.4.2.2 Test interrogator assembly

See 5.3.2.2.

For ISO/IEC 18000-3 Mode 2 a resistance of 85 Ω shall be connected across the output of the test interrogator measurement circuit in Figure 2 (between P1 and ground).

5.4.2.2.1 Test interrogator antenna

See 5.3.2.2.1.

For ISO/IEC 18000-3 Mode 2 the impedance matching network in Figure C.3 shall be altered to be a tuning network. The components for the tuning network shall be:

— C1 selected and adjusted such that the test interrogator antenna is series resonant at 13,56 MHz.

— C2 to C4 omitted (open circuit)

— R_{ext} zero (closed circuit)

For ISO/IEC 18000-3 Mode 2 the power driver, tuning network and test interrogator antenna shall provide the manufacturer specified field strengths (H_{max} and H_{min}) and modulation as specified in the base standard, ISO/IEC 18000-3.

For ISO/IEC 18000-3 Mode 2 the power driver output impedance is not constrained to 50 Ω and is not required to provide an adjustable range of modulation index for amplitude modulation.

IMPORTANT In order to avoid adverse effects on the measurement results due to reflection, the connection between the power driver and the test interrogator antenna should be kept as short as possible.

5.4.2.2.2 Sense coils

See 5.3.2.2.2.

5.4.2.3 Assembly of test interrogator

See 5.3.2.3.

5.4.2.4 Reference tags

Reference tags are defined:

© ISO/IEC 2004 – All rights reserved
Copyright International Organization for Standardization
Reproduced by IHS under license with ISO
No reproduction or networking permitted without license from IHS
Not for Resale

— to test H_{min} and H_{max} produced by an interrogator (under conditions of loading by a tag) and thus to test the ability of an interrogator to power a tag

— to generate the minimum tag reply load modulation signal.

5.4.2.4.1 Reference tag for interrogator power

See 5.3.2.4.1.

This reference tag shall be calibrated in accordance with Annex B clause B.8.

5.4.2.4.2 Reference tag for load modulation reception test

See 5.3.2.4.2

For ISO/IEC 18000-3 Mode 2 the load modulation shall be resistive only.

For ISO/IEC 18000-3 Mode 2 the load switching signal shall be as per the base standard, ISO/IEC 18000-3.

This reference tag is calibrated using the procedure described in clause 5.4.3.2. Adjusting or modifying the value of Rmod1 and Rmod2 (see Annex G) sets the tag reply load modulation amplitude.

5.4.2.4.3 Dimensions of the reference tags

See 5.3.2.4.3.

5.4.3 Functional test – tag

5.4.3.1 Purpose

The purpose of this test is to determine the amplitude of the tag reply load modulation signal within the specified operating field strength range [H_{min}, H_{max}] and functionality of the tag with modulation under emitted fields as defined in the base standard, ISO/IEC 18000-3.

5.4.3.2 Test procedure

This test uses the test interrogator assembly (see 5.4.2.2).

The RF power delivered by the signal generator to the test interrogator antenna shall be adjusted to the required field strength and modulation waveforms (see 5.4.4.2) as measured by the calibration coil without any tag. The output of the load modulation test circuit of Figure 2 is connected to a digital sampling oscilloscope. The 50 Ω potentiometer P1 shall be trimmed to minimise the residual carrier. This signal shall be at least 40 dB lower than the signal obtained by shorting one sense coil.

The tag under test shall be placed in the DUT position, concentric with sense coil A. The RF drive into the test interrogator antenna shall be re-adjusted to the required field strength. The output of the load modulation test circuit shall then be connected via a coax cable to a 50 Ω input spectrum analyser.

An appropriate command sequence as defined in the base standard, ISO/IEC 18000-3 shall be sent by the interrogator to obtain a load modulation response from the tag. (When calibrating the reference tag (see 5.4.2.4.2) the load modulation is provided by applying the load switching signal.)

The resulting sidebands at the spectrum analyser shall be greater than or equal to the value for tag reply load modulation as specified by the manufacturer.

IMPORTANT The sensitivity of the test set up is affected by the settings of the spectrum analyzer and care must be taken to set the spectrum analyzer to maintain consistent test results.

--`,,,,,,-`-`,,`,,`,`,,`---

© ISO/IEC 2004 All rights reserved

Copyright International Organization for Standardization
Reproduced by IHS under license with ISO
No reproduction or networking permitted without license from IHS
Not for Resale

5.4.3.3 Test report

The test report shall give the measured amplitudes of the sidebands and the applied fields and modulations for all sub-carriers.

5.4.4 Functional test – interrogator

5.4.4.1 Interrogator field strength and power transfer

5.4.4.1.1 Purpose

This test measures that the field strength produced by an interrogator with its specified antenna in its operating volume is no greater than a specified maximum value and no less than a specified minimum value, and therefore determines that the interrogator will correctly power a tag within the operating volume.

This test uses a reference tag (see 5.4.2.4.1).

5.4.4.1.2 Test procedure

The test report shall give the measured values for V_{DC} at H_{min} and H_{max} under the defined conditions.

5.4.4.1.3 Test report

See 5.3.4.1.3.

5.4.4.2 Modulation phase shift waveform

5.4.4.2.1 Purpose

This test is used to determine the phase shift waveform characteristics of the interrogator field as defined in the base standard, ISO/IEC 18000-3 within the defined operating volume.

5.4.4.2.2 Test procedure

The calibration coil (see 5.4.2.1) is positioned anywhere within the defined operating volume.

An unmodulated 13,56 MHz reference signal (synchronous with the 13,56 MHz interrogator clock) and the calibration coil output are both connected to a phase discriminator. The interrogator shall have means to provide such reference signal. The phase shift waveform characteristics are displayed on a suitable oscilloscope via the discriminator output.

5.4.4.2.3 Test report

The test report shall give the measured phase shift times.

5.4.4.3 Load modulation reception (informative only)

This is an indirect test of the ability of the interrogator to receive a minimum signal from the tag. This test verifies that an interrogator correctly detects the reply load modulation of a tag, which conforms to the base standard. ISO/IEC 18000-3. It is supposed that the interrogator has means to indicate correct reception of the sub-carrier(s) produced by a test tag.

A reference tag (see 5.4.2.4.2) can be used in conjunction with the test apparatus defined in Annex G, which shows a circuit that can be used to determine the sensitivity of an interrogator to load modulation within the defined operating volume.

The pass/fail condition is determined by the values defined in ISO/IEC 18000-3 parameter table for tag to interrogator link (reference M2-Tag:7). Failure under this criterion shall not be interpreted as failure of conformance for an otherwise conforming interrogator.

© ISO/IEC 2004 – All rights reserved
Copyright International Organization for Standardization
Reproduced by IHS under license with ISO
No reproduction or networking permitted without license from IHS
Not for Resale

Annex A
(normative)

Test setup parameters and dimensions for tags smaller than or equal to an ISO/IEC 7810 ID-1 outline

A.1 General

This normative Annex describes guidelines for the modification of the test set-up if RFID tags equal to or smaller than ID-1 size are to be measured.

A.2 Calibration coil

Table A.1 — Definition of calibration coil for ID-1 or smaller

Symbol	Value
oa	defined in ISO/IEC 7810 for ID-1 type
ob	defined in ISO/IEC 7810 for ID-1 type
ca	72 mm (+/- 2 %)
cb	42 mm (+/- 2 %)
co	5 mm (+/- 2 %)

NOTE 1 The area over which the field is integrated is approximately 3000 mm^2.

NOTE 2 At 13,56 MHz the approximate inductance is 250 nH and the approximate resistance is 0,4 Ω.

NOTE 3 A parasitic capacitance of the probe assembly of less than 35 pF normally ensures a resonant frequency for the whole set of greater than 60 MHz.

The open circuit calibration factor for this coil is 320 mV (rms) per A/m (rms) [equivalent to 900 mV (peak-to-peak) per A/m (rms)].

A.3 Test interrogator assembly

Table A.2 — Definition of test interrogator for ID-1 or smaller

Symbol	Value
asp	3 mm
lx	150 mm
dis	100 mm

A.4 Reference tag

Table A.3 — Reference tag for ID-1 or smaller

Symbol	Value
nr	4
ar	77 mm (+/- 2 %)
br	47 mm (+/- 2 %)
wr	500 µm (+/- 20 %)
sr	500 µm (+/- 20 %)

NOTE At 13,56 MHz the nominal inductance is 3,5 µH and the nominal resistance is 1 Ω.

© ISO/IEC 2004 All rights reserved

Copyright International Organization for Standardization
Reproduced by IHS under license with ISO
No reproduction or networking permitted without license from IHS
Not for Resale

A.5 Test interrogator antenna

Table A.4 — Test interrogator antenna for ID-1 or smaller

Symbol	Value
lya	170 mm
lyb	170 mm
lyd	150 mm
lyw	1,8 mm

A.6 Impedance matching network

Table A.5 — Impedance matching network components for ID-1 or smaller

Component	Value
C1	47 pF
C2	180 pF
C3	33 pF
C4	2-27 pF
R_{ext}	5 x 4,7 (parallel) Ω

A.7 Sense coil

Table A.6 — Sense coil for ID-1 or smaller

Symbol	Value
lya	170 mm
lyb	170 mm
sa	70 mm
sb	100 mm
rs	10 mm

A.8 Reference tag for interrogator power test

Table A.7 — Reference tag for interrogator power test for ID-1 or smaller

Component	Value
C3	27 pF
R1	11 kΩ
R2	91 Ω

© ISO/IEC 2004 – All rights reserved
Copyright International Organization for Standardization
Reproduced by IHS under license with ISO
No reproduction or networking permitted without license from IHS
Not for Resale

Annex B
(normative)

Guideline for RFID tags larger than ISO/IEC 7810 ID-1 size

B.1 General

This normative Annex describes guidelines for the modification of the test set-up if RFID tags larger than ID-1 size are to be measured.

B.2 Calibration coil

oa, *ob*:

The calibration coil PCB shall be of a suitable size to carry the single turn calibration coil and printed connections.

ca, *cb*, *co*:

The single turn calibration coil shall be of the same shape and dimensions as the RFID tag Antenna under test.

NOTE A parasitic capacitance of the probe assembly of less than 25 pF normally ensures a resonant frequency for the whole set of greater than 60 MHz for *ca* = 81 mm and *cb* = 47 mm. A parasitic capacitance of the probe assembly of less than 15 pF normally ensures a resonant frequency for the whole set of greater than 60 MHz for *ca* = 125 mm and *cb* = 73 mm.

Calibration factor

The open circuit calibration factor k_c of the calibration coil can be calculated as follows:

$$k_c = 1 / (2 \times \sqrt{2} \times \mu_0 \times \omega_0 \times A_c)$$

k_c Calibration factor of the calibration coil [A/m (rms) per Volt (peak to peak)]

μ_0 Permeability equal to $4 \times \pi \times 10^{-7}$ [Vs / Am] for free space

ω_0 $2 \times \pi \times f_0$ (f_0 = System frequency of the RFID system [Hz])

A_c Area of the single turn calibration coil [m^2]

The induced voltage $V_{c\,pp}$ (peak-peak) in the calibration coil can be calculated as follows:

$$V_{c..pp} = H_{rms} / k_c$$

H_{rms} Magnetic field strength (rms value)

$V_{c,\,pp}$ Induced voltage in the calibration coil (peak-peak value)

B.3 Test interrogator assembly

asp:

The air spacing shall be chosen depending on the DUT form factor to get the appropriate compromise between adverse loading effect and reduction in measurement sensitivity.

© ISO/IEC 2004 All rights reserved

Copyright International Organization for Standardization
Reproduced by IHS under license with ISO
No reproduction or networking permitted without license from IHS
Not for Resale

lx:

The length of the test interrogator assembly connection cable shall be as short as possible but not longer than 1,5 times the distance between the test interrogator antenna and the sense coils.

dis:

The distance between the test interrogator antenna and the sense coils shall be chosen so that the modulation of the tag under test is negligible at the position of the calibration coil.

B.4 Reference tag

nr:

The reference tag number of turns shall equal those of the RFID tag antenna under test.

ar, *br*:

The outer size of the coil shall equal that of the RFID tag antenna under test.

wr, *sr*:

The reference tag track width and track spacing shall equal those of the RFID tag antenna under test.

B.5 Test interrogator antenna

lya, *lyb*:

The test Interrogator antenna PCB shall have a suitable size to carry the test interrogator antenna and the impedance matching network.

lyd:

The diameter of the test interrogator antenna shall be approximately twice the maximum linear dimension of the RFID tag antenna under test.

lyw:

The test interrogator coil track width shall be sufficient to carry the current and maintain thermal stability for the materials being used.

B.6 Impedance matching network

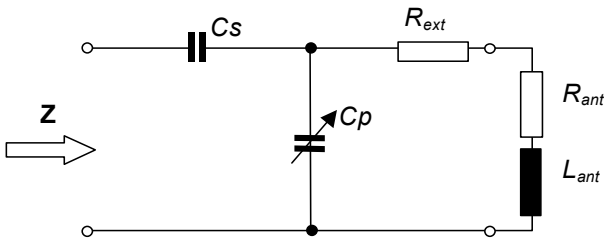

Figure B.1 — Impedance matching network

© ISO/IEC 2004 – All rights reserved
Copyright International Organization for Standardization
Reproduced by IHS under license with ISO
No reproduction or networking permitted without license from IHS
Not for Resale

The Quality factor Q of the antenna, is defined as follows:

$$Q = L_{ant} \times \omega_0 / (R_{ext} + R_{ant})$$

R_{ext} External resistor to limit the quality factor of the antenna

L_{ant} Inductance of the test interrogator antenna

R_{ant} Resistance of the test interrogator antenna

ω_0 The angular frequency corresponding to the RFID system (2.PI.13,56MHz)

Note the quality factor Q needs to be limited to guarantee the rise and fall times of modulation pulse defined in the base standard (typically Q<=30).

The impedance matching network can be calculated as follows:

$$R_{ext} = L_{ant} \times \omega_0 / Q$$

R_{ext} External resistor to limit the quality factor of the antenna

L_{ant} Inductance of the test interrogator antenna

R_{ant} Resistance of the test interrogator antenna

ω_0 $2 \times \pi \times f_0$ (f_0 = system frequency of the RFID system [Hz])

Q Quality factor

The values of the capacitors C_s and C_p are calculated in order to ensure the tuned frequency of 13,56 MHz and the matching to 50 Ω.

Resonance condition:

$$L_{ant} \times (C_s + C_p) \times (\omega_0)^2 = 1$$

Matching condition:

$$((C_s + C_p)/ C_s) \times (R_{ext} + R_{ant}) = Z_0$$

C_s Serial capacitance of the impedance matching network

C_p Parallel capacitance of the impedance matching network

Z_0 Impedance of the impedance matching network, 50 Ω

Note Suitable C_s and C_p need sufficient voltage rating (up to 200V for an antenna as defined in A.2). Suitable R_{ext} need a low inductance resistor and sufficient power rating (close to 2W for a field of 5A/m and up to 10W for 12 A/m in case of an antenna as defined in A.)

B.7 Sense coil

lya, *lyb*:

The sense coil PCB shall be of a suitable size to carry the single turn sense coil and printed connections.

sa, *sb*, *rs*:

The sense coil shall be of the same shape and approximately 1/3 larger than the RFID tag antenna under test.

--`,,,,,,-`-`,,`,,`,`,,`---

© ISO/IEC 2004 All rights reserved

Copyright International Organization for Standardization
Reproduced by IHS under license with ISO
No reproduction or networking permitted without license from IHS
Not for Resale

B.8 Reference tag for interrogator power test

C3 (see Annex F):

The value of *C3* has to be chosen so that the resonance circuit can be tuned to the RFID system frequency (depending on the inductance of the reference tag coil).

The resonant frequency of the reference tag is measured by using an impedance analyser or a LCR-meter connected to a calibration coil. The coil of the reference tag should be placed at a distance of 10 mm from the calibration coil, with the axes of the two coils being congruent. The resonant frequency is that frequency at which the resistive part of the measured complex impedance is at maximum.

R1, *R2* (see Annex F):

The value of *R1* can be ascertained with the following procedure:

Tune the reference tag to the RFID System frequency. Set Jumper J1 to position a to activate *R1*. Place the reference tag in the position of the RFID tag under test in the test interrogator assembly. Adjust the magnetic field strength in the assembly to the H_{min} value. The measurement of the magnetic field is performed with the calibration coil at the opposite side of the test interrogator antenna coil. Adjust *R1* to obtain $V_{DC} = 3V_{dc}$ across *R3* measured with a high impedance voltmeter.

The value of *R2* can be ascertained with the following procedure:

Tune the reference tag to the RFID system frequency. Set Jumper J1 to position b to activate *R2*. Place the reference tag in the position of the RFID tag under test in the test interrogator assembly. Adjust the magnetic field strength in the assembly to the H_{max} value. The measurement of the magnetic field is performed with the calibration coil at the opposite side of the test interrogator antenna coil. Adjust *R2* to obtain $V_{DC} = 3V_{dc}$ across *R3* measured with a high impedance voltmeter.

R1 and R2 shall be suitable potentiometers to obtain $V_{DC} = 3V_{dc}$; The potentiometer shall have a small outline to keep stray capacitance at a minimum.

© ISO/IEC 2004 – All rights reserved
Copyright International Organization for Standardization
Reproduced by IHS under license with ISO
No reproduction or networking permitted without license from IHS
Not for Resale

Annex C
(normative)

Test interrogator antenna

C.1 Layout including impedance matching network

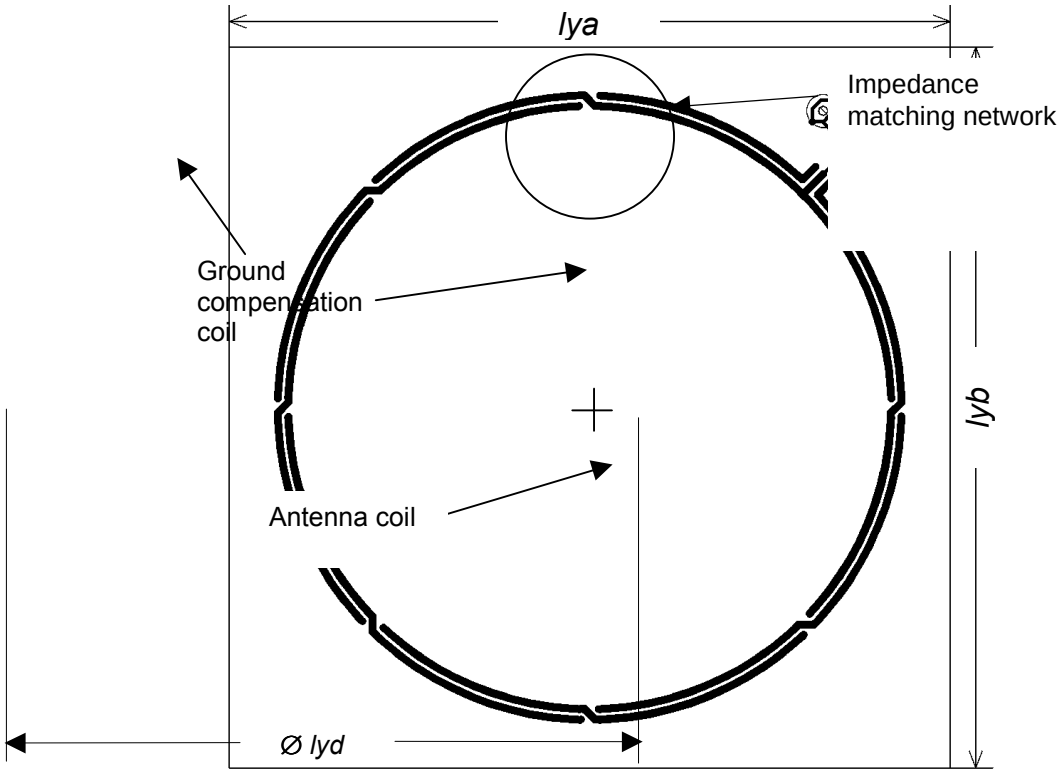

Drawings are not to scale. The antenna coil track width is *lyw* (except for through-plated holes).Starting from the impedance matching network there are crossovers every 45°.PCB: FR4 material thickness 1,6 mm, double sided with 35 µm copper.

Figure C.1 — Test interrogator antenna layout including impedance matching network (view from front)

--`,,,,,,-`-`,,`,,`,`,,`---
© ISO/IEC 2004 All rights reserved
Copyright International Organization for Standardization
Reproduced by IHS under license with ISO
No reproduction or networking permitted without license from IHS
Not for Resale

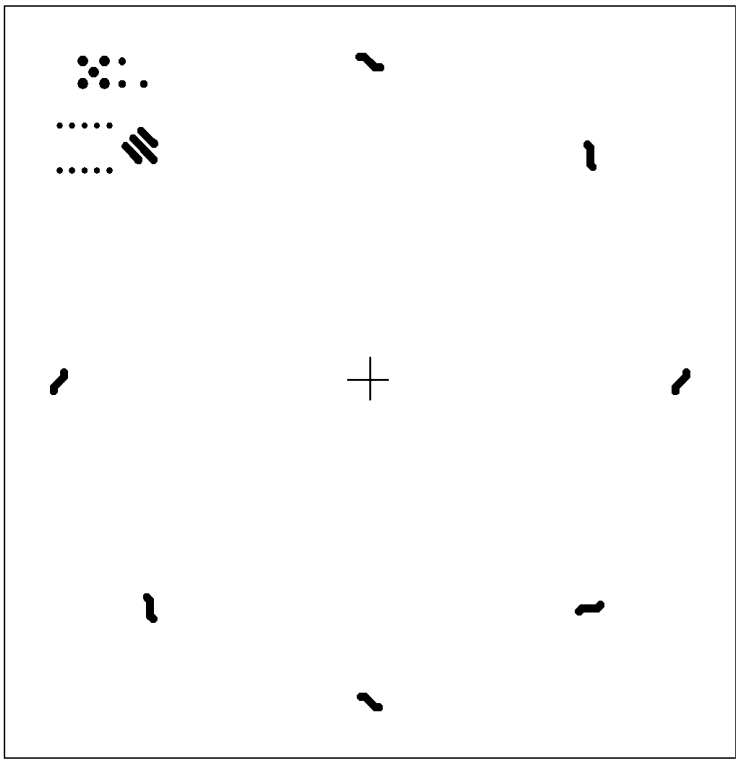

Figure C.2 — Test interrogator antenna layout (view from back)

NOTE PCBs and/or finished test set-ups may be available from:

arsenal research
RFID Test laboratory
Faradaygasse 3
A-1030 Vienna
Austria
Phone +43 50 550-6559
Fax +43 50 550-6660
Email mci@arsenal.ac.at

or from other sources.

© ISO/IEC 2004 – All rights reserved
Copyright International Organization for Standardization
Reproduced by IHS under license with ISO
No reproduction or networking permitted without license from IHS
Not for Resale

C.2 Impedance matching network

The antenna impedance (R_{ant}, L_{ant}) is matched to the function generator output impedance (Z = 50 Ω) by a matching circuit (see below). The capacitors C1, C2 and C3 have fixed values. The input impedance phase can be adjusted with the variable capacitor C4, see Annex A.6 and Annex B.6 as appropriate.

IMPORTANT Be careful with the maximum voltage on the capacitors C1, C2, C3 and C4 and with the maximum power dissipation on the resistor R_{ext} In case of tags smaller than or equal to an ISO/IEC 7810 ID-1 outline, where the test interrogator antenna is defined in Annex A.5, the limits of the individual components can reach:

— 200 V in voltage rating for the capacitors,

— approximately 2 W dissipated on R_{ext} for a field value of 5 A/m,

— approximately 10 W dissipated on R_{ext} for a field value of 12 A/m.

The linear low distortion variable output 50 Ω power driver should be capable of emitting appropriate signal sequences. The modulation index should be adjustable in the ranges of 10 % - 30 % and 95 % - 100 %. The output power should be adjustable to deliver field strengths as specified in the base standard, ISO/IEC 18000-3. Care should be taken with the duration of fields above the upper operating range.

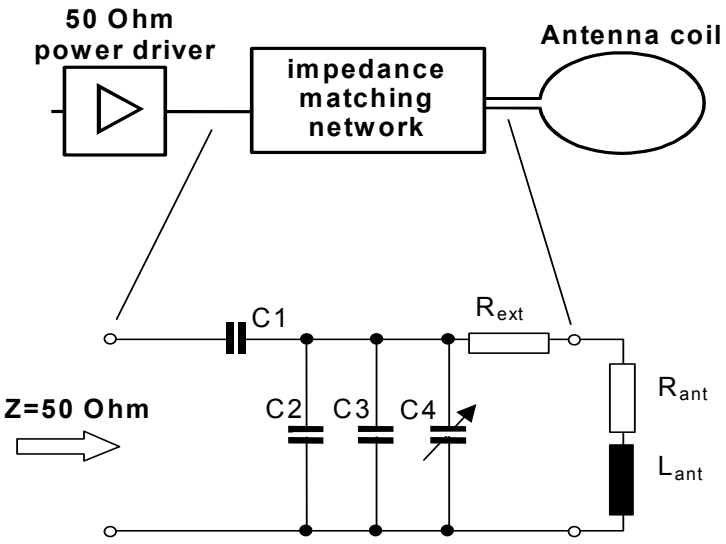

Figure C.3 – Impedance matching network

© ISO/IEC 2004 All rights reserved

Copyright International Organization for Standardization
Reproduced by IHS under license with ISO
No reproduction or networking permitted without license from IHS
Not for Resale

Annex D
(informative)

Test interrogator antenna tuning

The figures below show the two steps of a simple phase tuning procedure to match the impedance of the antenna to that of the driving generator. After the two steps of the tuning procedure the signal generator shall be directly connected to the antenna output for the tests.

Step 1:

A high precision resistor of 50 Ω +/- 1 % (e.g. 50 Ω BNC resistor) is inserted in the signal line between the signal generator output and an antenna connector. The probes of the oscilloscope are connected to the two sides of the serial reference resistor. The oscilloscope displays a Lissajous figure when it is set in Y to X presentation. The signal generator is set to:

Wave form:	Sinusoidal
Frequency:	13,56 MHz
Amplitude:	2 V (rms) – 5 V (rms)

The output is terminated with a second high precision resistor of 50 Ω +/- 1 % (e.g. 50 Ω BNC terminating resistor). The probe, which is in parallel to the output connector has a small parasitic capacitance C_{probe}. A calibration capacitance C_{cal} in parallel to the reference resistor compensates this probe capacitor if C_{cal} = C_{probe}. The probe capacitor is compensated when the Lissajous figure is completely closed.

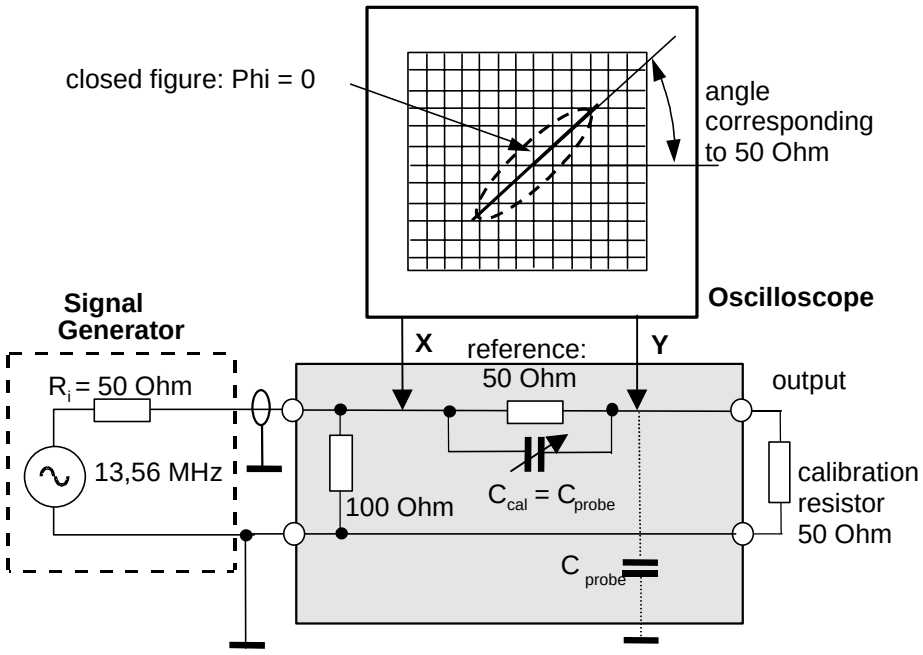

Figure D.1 — Calibration set-up (Step 1)

IMPORTANT The ground cable has to be run close to the probe to avoid induced voltages caused by the magnetic field.

© ISO/IEC 2004 – All rights reserved
Copyright International Organization for Standardization
Reproduced by IHS under license with ISO
No reproduction or networking permitted without license from IHS
Not for Resale

Step 2:

Using the same values as set for step 1, in the second step the matching circuitry is connected to the antenna output. The capacitor C4 on the antenna board is used to tune the phase to zero.

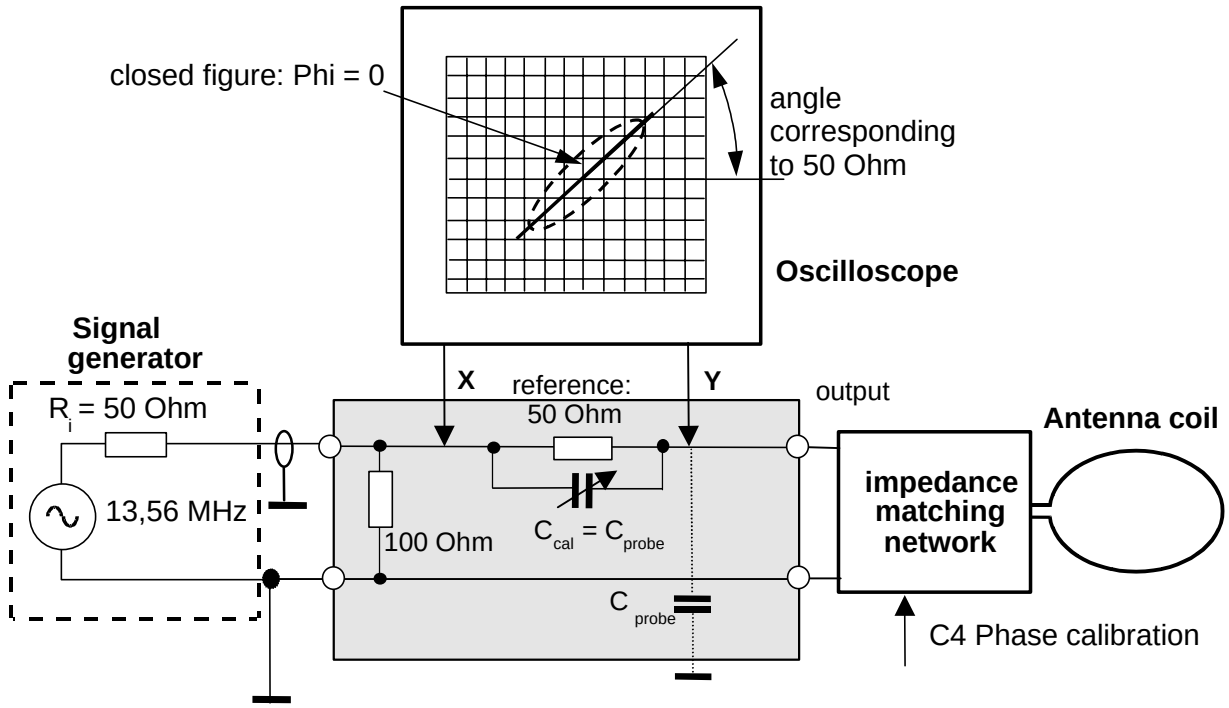

Figure D.2 — Calibration set-up (Step 2)

© ISO/IEC 2004 All rights reserved
Copyright International Organization for Standardization
Reproduced by IHS under license with ISO
No reproduction or networking permitted without license from IHS
Not for Resale

Annex E
(normative)

Sense coil

E.1 Sense coil layout

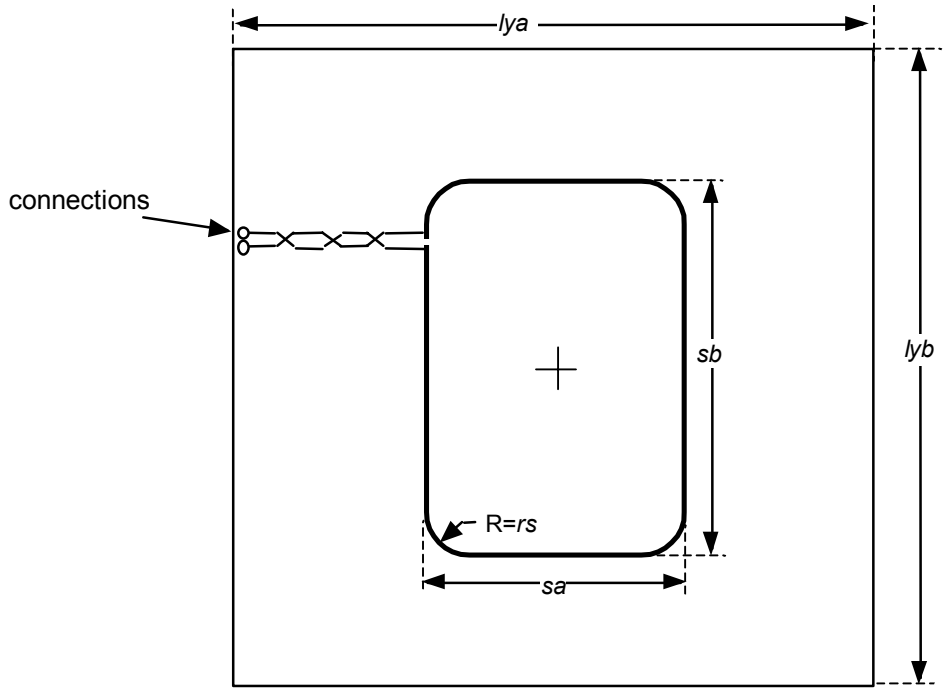

Drawings are not to scale. The sense coil track width is 0,5 mm +/- 20 % (except for through-plated holes). Sizes of the coils refer to the outer dimensions. PCB: FR4 material thickness 1,6 mm, double sided with 35 µm copper.

Figure E.1 – Layout for sense coils a and b

NOTE PCBs and/or finished test set-ups may be available from:

arsenal research
RFID Test laboratory
Faradaygasse 3
A-1030 Vienna
Austria
Phone +43 50 550-6559
Fax +43 50 550-6660
Email mci@arsenal.ac.at

or from other sources.

© ISO/IEC 2004 – All rights reserved
Copyright International Organization for Standardization
Reproduced by IHS under license with ISO
No reproduction or networking permitted without license from IHS
Not for Resale

Sense coil assembly

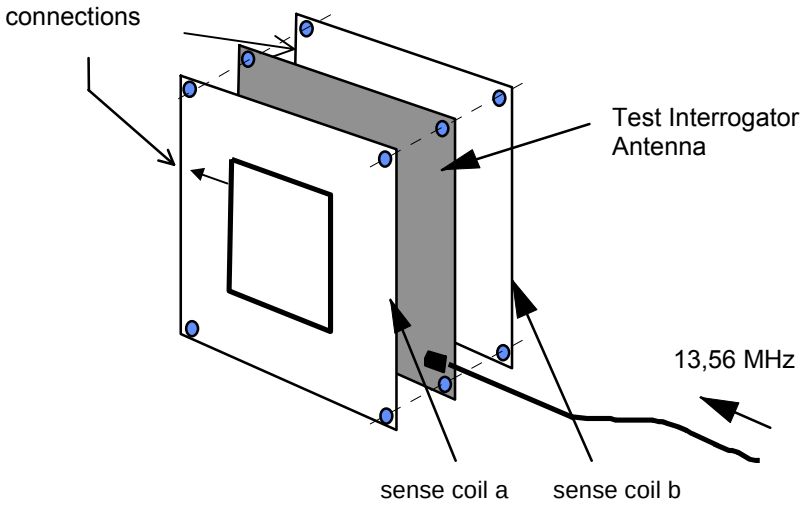

Figure E.2 – Sense coil assembly

© ISO/IEC 2004 All rights reserved
Copyright International Organization for Standardization
Reproduced by IHS under license with ISO
No reproduction or networking permitted without license from IHS
Not for Resale

Annex F
(normative)

Reference tag for interrogator power test

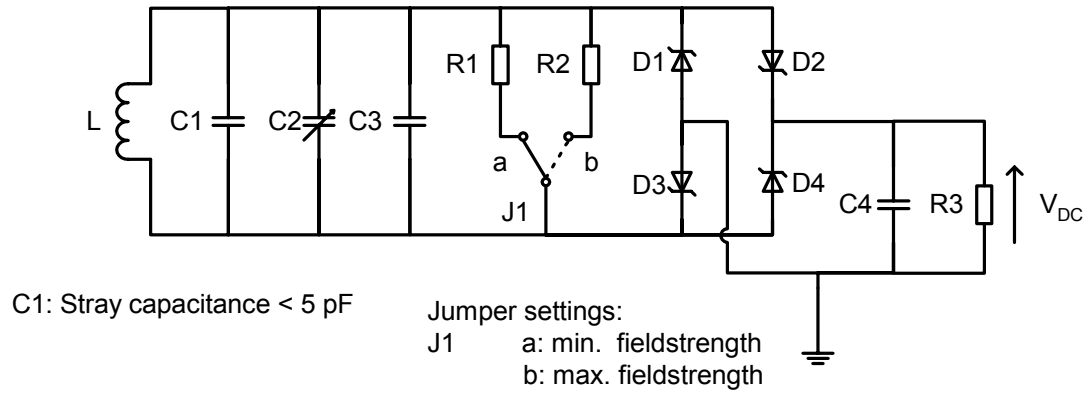

Figure F.1 – Circuit diagram for reference tag

Components list:

Table F.1 – Components of Figure F.1

Component	Value
L (coil)	see clause 5.3.2.4.5
C1	Stray capacitance < 5pF
C2	2 … 10 pF
C3	Adjust resonance, depending on L (see Annex A.8 and Annex B.8)
C4	10 nF
D1, D2, D3, D4	see characteristics in table E.2 (BAR 43 or equivalent)
R1	Value which results in 3V V_{DC} for minimum operating field strength of the tag (see Annex A.8 for tags that are ID-1 size or smaller and Annex B.8 for tags larger than ID-1 size)
R2	Value which results in 3V V_{DC} for maximum operating field strength of the tag (see Annex A.8 for tags that are ID-1 size or smaller and Annex B.8 for tags larger than ID-1 size)
R3	100 kΩ

© ISO/IEC 2004 – All rights reserved
Copyright International Organization for Standardization
Reproduced by IHS under license with ISO
No reproduction or networking permitted without license from IHS
Not for Resale

Table F.2 — Specification of basic characteristics of D1, D2, D3, D4

Symbol	Test Condition at Tj=25 °C	Typ.	Max.	Unit
V_F	I_F=2mA		0,33	V
C	V_R=1V, F=1 MHz	7		PF
t_{rr}	I_F=10mA, I_R=10mA, I_{rr}=1mA		5	Ns

V_F Forward voltage drop
V_R Reverse voltage
I_F Forward current
I_R Reverse current
t_{rr} Reverse recovery time
I_{rr} Reverse recovery current
Tj Junction temperature
F Frequency
C Junction capacitance

© ISO/IEC 2004 All rights reserved
Copyright International Organization for Standardization
Reproduced by IHS under license with ISO
No reproduction or networking permitted without license from IHS
Not for Resale

Annex G
(informative)

Reference tag for load modulation test

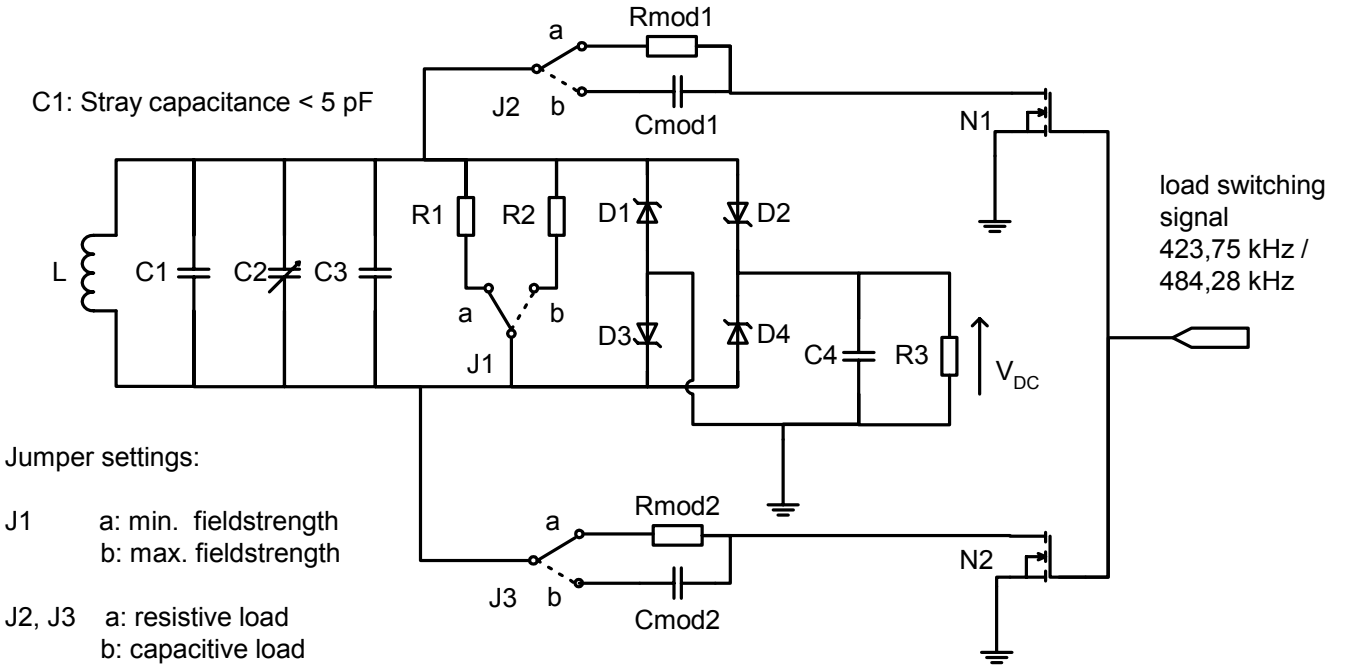

Adjust following components for required emulation:

Component	Function	Value
C2	adjust resonance	Depending on L
Cmod1, Cmod2	capacitive modulation	between 3,0 pF and 120 pF
Rmod1, Rmod2	resistive modulation	between 100 Ω and 2,7 kΩ

Components list:

Component	Value
R1	as defined in Annex F, Figure F.1
R2	as defined in Annex F, Figure F.1
R3	100 kΩ
D1, D2, D3, D4	as defined in Annex F, table F.1
L	see clause 5.3.2.4.5
C1	Stray capacitance < 5 pF
C3	as defined in Annex F, Figure F.1
C4	10 nF
N1, N2	N-MOS Transistor with low parasitic capacitance, e.g. 74HC03

Figure G.1 — Circuit diagram for reference tag for load modulation test

Copyright International Organization for Standardization
Reproduced by IHS under license with ISO
No reproduction or networking permitted without license from IHS
© ISO/IEC 2004 – All rights reserved
Not for Resale

Annex H
(informative)

Program for evaluation of the spectrum

The following program written in C language gives an example of the calculation of the magnitude of the spectrum from the tag.

```
/*************************************************************/
/***  This program calculates the fourier coefficients       ***/
/***  of load modulated voltage of a tag                     ***/
/***  The coefficient are calculated for the frequency       ***/
/***    Carrier:            13.5600 MHz                      ***/
/***    Sub-carrier:         423.75 kHz  / 484.286 kHz       ***/
/***    see #define N_FSUB:   32            28               ***/
/***    Upper sideband:     13.9838 MHz / 14.0443 MHz        ***/
/***    Lower sideband:     13.1363 MHz / 13.0757 MHz        ***/
/*************************************************************/
/*** Input:                                                  ***/
/***  File in CSV Format containing a table of two           ***/
/***  columns (time and test In. output voltage vd, clause 7)***/
/***                                                         ***/
/***  data format of input-file:                             ***/
/***  -------------------------                              ***/
/***  - one data-point per line:                             ***/
/***     {time[seconds], sense-coil-voltage[volts])          ***/
/***  - contents in ASCII, no headers                        ***/
/***  - data-points shall be equidistant time                ***/
/***  - minimum sampling rate: 100 MSamples/second           ***/
/***  - modulation waveform centred                          ***/
/***      (max. tolerance: half of sub-carrier cycle)        ***/
/***                                                         ***/
/***    "screen-shot of centred modulation-waveform          ***/
/***     with 8 sub-carrier cycles":                         ***/
/***                                                         ***/
/***   XXXXXXXXXX  xx  xx  xx  xx  xx  xx  xx  xxXXXXXXXXXX  ***/
/***   XXXXXXXXXX  xx  xx  xx  xx  xx  xx  xx  xxXXXXXXXXXX  ***/
/***   XXXXXXXXXXxxxxxxxxxxxxxxxxxxxxxxxxxxxxxxxXXXXXXXXXX  ***/
/***   XXXXXXXXXXxxxxxxxxxxxxxxxxxxxxxxxxxxxxxxxXXXXXXXXXX  ***/
/***   XXXXXXXXXXxxxxxxxxxxxxxxxxxxxxxxxxxxxxxxxXXXXXXXXXX  ***/
/***   XXXXXXXXXXxxxxxxxxxxxxxxxxxxxxxxxxxxxxxxxXXXXXXXXXX  ***/
/***   XXXXXXXXXX  xx  xx  xx  xx  xx  xx  xx  xxXXXXXXXXXX  ***/
/***   XXXXXXXXXX  xx  xx  xx  xx  xx  xx  xx  xxXXXXXXXXXX  ***/
/***    |----------------------cc----------------------|     ***/
/***  example for spreadsheet file (start in next line):     ***/
/***   (time)      (voltage)                                 ***/
/***  3.00000e-06 , 1.00                                     ***/
/***  3.00200e-06 , 1.01                                     ***/
/***  .....                                                  ***/
/*************************************************************/
/*** RUN: Modtst7 [filename1[.csv] ... filename[.csv] ]      ***/
/*************************************************************/
#include <stdio.h>
#include <conio.h>
#include <string.h>
#include <math.h>
#define MAX_SAMPLES 5000
#define N_FSUB 32.0F    /* sidebands: 13.9838 MHz / 13.1363 MHz */
/* #define N_FSUB 28.0F /* sidebands: 14.0443 MHz / 13.0757 MHz */
float  pi;   /* pi=3.14.... */

/* Array for time and sense coil voltage vd*/
float vtime[MAX_SAMPLES]; /* time array  */
float vd[MAX_SAMPLES];    /* Array for different coil voltage */
```

--`,,,,,,-`-`,,`,,`,`,,`---

© ISO/IEC 2004 All rights reserved

Copyright International Organization for Standardization
Reproduced by IHS under license with ISO
No reproduction or networking permitted without license from IHS
Not for Resale

```
/*************************************************************/
/***    Read CSV File  Function                            ***/
/***                                                       ***/
/***    Description:                                       ***/
/***    This function reads the table of time and sense coil ***/
/***    voltage from a File in CSV Format                  ***/
/***                                                       ***/
/***    Input: filename                                    ***/
/***                                                       ***/
/***    Return: Number of samples  (sample Count)          ***/
/***            0  if an error occurred                    ***/
/***                                                       ***/
/***    Displays Statistics:                               ***/
/***                                                       ***/
/***    Filename, SampleCount, Sample rate, Max/Min Voltage  ***/
/*************************************************************/
int readcsv(char* fname)
{
   float a,b;
   float max_vd,min_vd;
   int i;
   FILE     *sample_file;

   /************ Open File **********************************/
   if (!strchr(fname, '.'))   strcat(fname, ".csv");

   if ((sample_file = fopen(fname, "r")) == NULL)
      {
      printf("Cannot open input file %s.\n",fname);
      return 0;
      }
   /*************************************************************/
   /* Read CSV File                                             */
   /*************************************************************/
   max_vd=-1e-9F;
   min_vd=-max_vd;
   i=0;

   while (!feof(sample_file))
      {
      if (i>=MAX_SAMPLES)
      {
          printf("Warning: File truncated !!!\n");
          printf("To much samples in file %s\b\n",fname);
          break;
      }
      fscanf(sample_file,"%f,%f\n", &a, &b);
      vtime[i] = a;
      vd[i] = b;
      if (vd[i]>max_vd) max_vd=vd[i];
      if (vd[i]<min_vd) min_vd=vd[i];
      i++;
      }
   fclose(sample_file);

   /************ Displays Statistics  ***********************/
   printf("\n*********************************************\n");
   printf("\nStatistics: \n");
   printf(" Filename    : %s\n",fname);
   printf(" Sample count: %d\n",i);
   printf(" Sample rate : %1.0f MHz\n",1e-6/(vtime[1]-vtime[0]));
   printf(" Max(vd)     : %4.0f mV\n",max_vd*1000);
   printf(" Min(vd)     : %4.0f mV\n",min_vd*1000);

   return i;
}/*************** End ReadCsv **************/
```

--`,,,,,,-`-`,,`,,`,`,,`---

Copyright International Organization for Standardization
Reproduced by IHS under license with ISO
No reproduction or networking permitted without license from IHS
Not for Resale
© ISO/IEC 2004 – All rights reserved

```
/*************************************************************/
/***    DFT : Discrete Fourier Transform                   ***/
/*************************************************************/
/***    Description:                                       ***/
/***    This function calculate the Fourier coefficient    ***/
/***                                                       ***/
/***    Input: Number of samples                           ***/
/***    Global Variables:                                  ***/
/***                                                       ***/
/***    Displays Results:                                  ***/
/***                                                       ***/
/***     Carrier coefficient                               ***/
/***     Upper sideband coefficient                        ***/
/***     Lower sideband coefficient                        ***/
/***                                                       ***/
/*************************************************************/

void dft(int count)
{
   float c0_real,c0_imag,c0_abs,c0_phase;
   float c1_real,c1_imag,c1_abs,c1_phase;
   float c2_real,c2_imag,c2_abs,c2_phase;
   int   N_data,center,start,end;
   float w0,wu,wl;

   int i;

   w0=(float)(13.56e6*2.0)*pi;  /* carrier        13.56 MHz */
   wu=(float)(1.0+1.0/N_FSUB)*w0; /* upper sideband 13.98 MHz */
   wl=(float)(1.0-1.0/N_FSUB)*w0; /* lower sideband 13.14 MHz */

   c0_real=0;  /* real part of the carrier fourier coefficient */
   c0_imag=0;  /* imag part of the carrier fourier coefficient */
   c1_real=0;  /* real part of the up. sideband fourier coefficient */
   c1_imag=0;  /* imag part of the up. sideband fourier coefficient */
   c2_real=0;  /* real part of the lo. sideband fourier coefficient */
   c2_imag=0;  /* imag part of the lo. sideband fourier coefficient */

   center=(count+1)/2; /*  center address */

   /********** signal selection  ****************************/

   /*   Number of samples for two sub-carrier periods  */

   N_data=(int)(0.5+2.0*N_FSUB/(vtime[2]-vtime[1])/13.56e6F);
          /* Note: (vtime[2]-vtime[1]) are the scope sample rate */

   start=center-(int)(N_data/2.0+0.5);
   end=start+N_data-1;

   /******************    DFT ******************************/
   for( i=start;i<=end;i++)
      {
      c0_real=c0_real+vd[i]*(float)cos(w0*vtime[i]);
      c0_imag=c0_imag+vd[i]*(float)sin(w0*vtime[i]);
      c1_real=c1_real+vd[i]*(float)cos(wu*vtime[i]);
      c1_imag=c1_imag+vd[i]*(float)sin(wu*vtime[i]);
      c2_real=c2_real+vd[i]*(float)cos(wl*vtime[i]);
      c2_imag=c2_imag+vd[i]*(float)sin(wl*vtime[i]);
      }

   /******************    DFT scale ************************/
   c0_real=2.0F*c0_real/(float)(N_data);
   c0_imag=2.0F*c0_imag/(float)(N_data);
   c1_real=2.0F*c1_real/(float)(N_data);
   c1_imag=2.0F*c1_imag/(float)(N_data);
   c2_real=2.0F*c2_real/(float)(N_data);
   c2_imag=2.0F*c2_imag/(float)(N_data);
```

--`,,,,,,-`-`,,`,,`,`,,`---

© ISO/IEC 2004 All rights reserved

Copyright International Organization for Standardization
Reproduced by IHS under license with ISO
No reproduction or networking permitted without license from IHS
Not for Resale

```
   /*************** absolute fourier coefficient     **********/
   c0_abs=(float)sqrt(c0_real*c0_real + c0_imag*c0_imag);
   c1_abs=(float)sqrt(c1_real*c1_real + c1_imag*c1_imag);
   c2_abs=(float)sqrt(c2_real*c2_real+c2_imag*c2_imag);

   /**************    Phase of fourier coefficient    **********/
   c0_phase=(float)atan2(c0_imag,c0_real);
   c1_phase=(float)atan2(c1_imag,c1_real);
   c2_phase=(float)atan2(c2_imag,c2_real);

   /**************  Result Display    *************************/
   printf("\n\nResults: \n");

   printf("Carrier        ");
   printf("Abs: %7.3fmV  ",1000*c0_abs);
   printf("Phase: %3.0fdeg\n",c0_phase/pi*180);

   printf("Upper sideband ");
   printf("Abs: %7.3fmV  ",1000*c1_abs);
   printf("Phase: %3.0fdeg\n",c1_phase/pi*180);

   printf("Lower sideband ");
   printf("Abs: %7.3fmV  ",1000*c2_abs);
   printf("Phase: %3.0fdeg\n\n",c2_phase/pi*180);
   printf("\n*********************************************\n");
   return;
}/*************** End DFT **************/


/*************************************************************/
/***    MAIN  LOOP                                         ***/
/*************************************************************/
int main(unsigned short paramCount,char *paramList[])
{
   char fname[256];
   unsigned int  i,sample_count;
   pi = (float)atan(1)*4; /* calculate pi */

   printf("\n*********************************************\n");
   printf("\n****  tag Test-Program                      ****\n");
   printf("\n****  Version: 1.1     JUL 2000             ****\n");
   printf("\n*********************************************\n");

   /************* No Input Parameter           ****************/
   if (paramCount==1)
      {
      printf("\nCSV File name :");
      scanf("%s",fname);
      if (!strchr(fname, '.'))   strcat(fname, ".csv");
      if (!(sample_count=readcsv(fname))) return;

      dft(sample_count);
      }
   else
      {
      /************* Input Parameter Loop     ****************/
      for (i=1;i<paramCount;i++)
         {
         strcpy(fname,paramList[i]);

         if (!strchr(fname, '.'))   strcat(fname, ".csv");
         if (!(sample_count=readcsv(fname))) break;
         dft(sample_count);
         }
      }
   return;
}/********************** End Main  *************************/
```


© ISO/IEC 2004 – All rights reserved
Copyright International Organization for Standardization
Reproduced by IHS under license with ISO
No reproduction or networking permitted without license from IHS
Not for Resale

Bibliography

[1] ISBN 92-67-10188-9, *ISO Guide to the Expression of Uncertainty in Measurement*

© ISO/IEC 2004 All rights reserved

Copyright International Organization for Standardization
Reproduced by IHS under license with ISO
No reproduction or networking permitted without license from IHS
Not for Resale

ICS 35.040

Price based on 33 pages

© ISO/IEC 2004 – All rights reserved
Copyright International Organization for Standardization
Reproduced by IHS under license with ISO
No reproduction or networking permitted without license from IHS
Not for Resale