TECHNICAL REPORT

ISO/IEC TR 18047-2

First edition
2006-06-01

Information technology — Radio frequency identification device conformance test methods —

Part 2: Test methods for air interface communications below 135 kHz

Technologies de l'information — Méthodes d'essai de conformité du dispositif d'identification de radiofréquence —

Partie 2: Méthodes d'essai pour des communications d'une interface d'air à moins de 135 kHz

Reference number
ISO/IEC TR 18047-2:2006(E)

© ISO/IEC 2006

Copyright International Organization for Standardization
Provided by IHS under license with ISO
No reproduction or networking permitted without license from IHS

Not for Resale

PDF disclaimer

This PDF file may contain embedded typefaces. In accordance with Adobe's licensing policy, this file may be printed or viewed but shall not be edited unless the typefaces which are embedded are licensed to and installed on the computer performing the editing. In downloading this file, parties accept therein the responsibility of not infringing Adobe's licensing policy. The ISO Central Secretariat accepts no liability in this area.

Adobe is a trademark of Adobe Systems Incorporated.

Details of the software products used to create this PDF file can be found in the General Info relative to the file; the PDF-creation parameters were optimized for printing. Every care has been taken to ensure that the file is suitable for use by ISO member bodies. In the unlikely event that a problem relating to it is found, please inform the Central Secretariat at the address given below.

© ISO/IEC 2006

All rights reserved. Unless otherwise specified, no part of this publication may be reproduced or utilized in any form or by any means, electronic or mechanical, including photocopying and microfilm, without permission in writing from either ISO at the address below or ISO's member body in the country of the requester.

ISO copyright office
Case postale 56 • CH-1211 Geneva 20
Tel. + 41 22 749 01 11
Fax + 41 22 749 09 47
E-mail copyright@iso.org
Web www.iso.org

Published in Switzerland

Copyright International Organization for Standardization
Provided by IHS under license with ISO
No reproduction or networking permitted without license from IHS

© ISO/IEC 2006 – All rights reserved

Not for Resale

Contents

Page

Foreword ... iv

Introduction ... v

1 Scope ... 1

2 Normative references ... 1

3 Terms, definitions, symbols and abbreviated terms ... 2
3.1 Terms and definitions ... 2
3.2 Symbols ... 2
3.3 Abbreviated terms ... 2

4 Conformance tests for ISO/IEC 18000-2 — below 135 kHz ... 3
4.1 General ... 3
4.2 Default conditions applicable to the test methods ... 3
4.3 Setup of test equipment for tag tests ... 4
4.4 Test methods for tags ... 11
4.5 Test procedure for tags ... 11
4.6 Equipment for interrogator tests ... 17
4.7 Methods for interrogator tests ... 17
4.8 Test procedure for interrogator ... 18

Annex A (normative) **Design description of the tag emulation circuits** ... 20

Annex B (informative) **Program for the evaluation of the spectrum** ... 25

Bibliography ... 29

--`,,```,,,,````-`-`,,`,,`,`,,`---

© ISO/IEC 2006 – All rights reserved

Copyright International Organization for Standardization
Provided by IHS under license with ISO
No reproduction or networking permitted without license from IHS

Not for Resale

Foreword

ISO (the International Organization for Standardization) and IEC (the International Electrotechnical Commission) form the specialized system for worldwide standardization. National bodies that are members of ISO or IEC participate in the development of International Standards through technical committees established by the respective organization to deal with particular fields of technical activity. ISO and IEC technical committees collaborate in fields of mutual interest. Other international organizations, governmental and non-governmental, in liaison with ISO and IEC, also take part in the work. In the field of information technology, ISO and IEC have established a joint technical committee, ISO/IEC JTC 1.

International Standards are drafted in accordance with the rules given in the ISO/IEC Directives, Part 2.

The main task of the joint technical committee is to prepare International Standards. Draft International Standards adopted by the joint technical committee are circulated to national bodies for voting. Publication as an International Standard requires approval by at least 75 % of the national bodies casting a vote.

In exceptional circumstances, the joint technical committee may propose the publication of a Technical Report of one of the following types:

— type 1, when the required support cannot be obtained for the publication of an International Standard, despite repeated efforts;

— type 2, when the subject is still under technical development or where for any other reason there is the future but not immediate possibility of an agreement on an International Standard;

— type 3, when the joint technical committee has collected data of a different kind from that which is normally published as an International Standard ("state of the art", for example).

Technical Reports of types 1 and 2 are subject to review within three years of publication, to decide whether they can be transformed into International Standards. Technical Reports of type 3 do not necessarily have to be reviewed until the data they provide are considered to be no longer valid or useful.

Attention is drawn to the possibility that some of the elements of this document may be the subject of patent rights. ISO and IEC shall not be held responsible for identifying any or all such patent rights.

ISO/IEC TR 18047-2, which is a Technical Report of type 2, was prepared by Joint Technical Committee ISO/IEC JTC 1, *Information technology*, Subcommittee SC 31, *Automatic identification and data capture techniques*.

ISO/IEC TR 18047 consists of the following parts, under the general title *Information technology — Radio frequency identification device conformance test methods*:

— *Part 2: Test methods for air interface communications below 135 kHz*

— *Part 3: Test methods for air interface communications at 13,56 MHz*

— *Part 4: Test methods for air interface communications at 2,45 GHz*

— *Part 6: Test methods for air interface communications at 860 MHz to 960 MHz*

— *Part 7: Test methods for active air interface communications at 433 MHz*

© ISO/IEC 2006 – All rights reserved
Copyright International Organization for Standardization
Provided by IHS under license with ISO
No reproduction or networking permitted without license from IHS
Not for Resale

Introduction

ISO/IEC 18000 defines the air interfaces for radio frequency identification (RFID) devices used in item management applications. ISO/IEC 18000-2 defines the air interface for these devices operating in frequencies below 135 kHz.

The purpose of ISO/IEC TR 18047 is to provide test methods for conformance with the various parts of ISO/IEC 18000.

Each part of ISO/IEC TR 18047 contains all measurements required to be made on a product in order to establish whether it conforms with the corresponding part of ISO/IEC 18000. For this part of ISO/IEC TR 18047, each interrogator needs to be assessed with tags of both type A (FDX) and type B (HDX), while each tag needs to be assessed either with type A (FDX) or type B (HDX).

It should be noted that measurement of tag and interrogator performance is covered by ISO/IEC TR 18046.

© ISO/IEC 2006 – All rights reserved

Copyright International Organization for Standardization
Provided by IHS under license with ISO
No reproduction or networking permitted without license from IHS
Not for Resale

Copyright International Organization for Standardization
Provided by IHS under license with ISO
No reproduction or networking permitted without license from IHS
Not for Resale

Information technology — Radio frequency identification device conformance test methods —

Part 2:
Test methods for air interface communications below 135 kHz

1 Scope

This part of ISO/IEC TR 18047 defines test methods for determining the conformance of radio frequency identification devices (tags and interrogators) for item management with the specifications given in ISO/IEC 18000-2, but does not apply to the testing of conformity with regulatory or similar requirements.

The test methods require only that the mandatory functions, and any optional functions which are implemented, be verified. This may, in appropriate circumstances, be supplemented by further, application-specific functionality criteria that are not available in the general case.

The interrogator and tag conformance parameters in this part of ISO/IEC TR 18047 are the following:

- mode-specific conformance parameters including nominal values and tolerances;
- parameters that apply directly affecting system functionality and inter-operability.

The following are not included in this part of ISO/IEC TR 18047:

- parameters that are already included in regulatory test requirements;
- high-level data encoding conformance test parameters (these are specified in ISO/IEC 15962).

Unless otherwise specified, the tests in this part of ISO/IEC TR 18047 are to be applied exclusively to RFID tags and interrogators defined in ISO/IEC 18000-2.

Clause 4 describes all necessary conformance tests.

2 Normative references

The following referenced documents are indispensable for the application of this document. For dated references, only the edition cited applies. For undated references, the latest edition of the referenced document (including any amendments) applies.

ISO/IEC 18000-2, *Information technology — Radio frequency identification for item management — Part 2: Parameters for air interface communications below 135 kHz*

ISO/IEC 19762 (all parts), *Information technology — Automatic identification and data capture (AIDC) techniques — Harmonized vocabulary*

ISBN 92-67-10188-9, 1993, *ISO Guide to the expression of uncertainty in measurement*

© ISO/IEC 2006 – All rights reserved

Copyright International Organization for Standardization
Provided by IHS under license with ISO
No reproduction or networking permitted without license from IHS
Not for Resale

3 Terms, definitions, symbols and abbreviated terms

3.1 Terms and definitions

For the purposes of this document, the terms and definitions given in ISO/IEC 19762 and the following apply.

3.1.1
air-cored tag
tag having an antenna which uses no material to modify the antenna inductance

3.1.2
ferrite-cored tag
tag having an antenna which uses ferrite to increase antenna inductance

3.1.3
level of tag response
ability of the tag to send the information to the interrogator station

3.1.4
noise floor
measure, usually in decibels, of the constant level of ambient environmental energy level present within the frequency band of interest

3.2 Symbols

For the purposes of this document, the symbols given in ISO/IEC 19762 apply.

3.3 Abbreviated terms

For the purposes of this document, the abbreviated terms given in ISO/IEC 19762 and the following apply.

AWG arbitrary waveform generator

CRC cyclic redundancy check

FDX full duplex

FSK frequency shift keying

HDX half duplex

HSC Helmholtz sense coil

HTA Helmholtz transmitting antenna

NRZ non return to zero

PC computer suitable for the conformance testing requirements, e.g., personal computer

RF radio frequency

SC sense coil

DUT device under test

--`,,```,,,,````-`-`,,`,,`,`,,`---

© ISO/IEC 2006 – All rights reserved
Copyright International Organization for Standardization
Provided by IHS under license with ISO
No reproduction or networking permitted without license from IHS
Not for Resale

4 Conformance tests for ISO/IEC 18000-2 — below 135 kHz

4.1 General

This part of ISO/IEC TR 18047 specifies a series of tests to determine the conformance of interrogators and tags. The results of these tests shall be compared with the values of the parameters specified in ISO/IEC 18000-2 to determine whether the interrogator or tag under test conforms. ISO/IEC 18000-1 provides a general description of air interface parameters.

A tag compliant to ISO/IEC 18000-2 shall support either type A (FDX) or type B (HDX).

An interrogator compliant to ISO/IEC 18000-2 shall support both type A (FDX) and type B (HDX).

NOTE In case an interrogator or tags does not comply to the series of tests specified in this part of ISO/IEC TR 18047 due to the form factors of the antennas, it is recommended to amend this document to accommodate these new application requirements by providing new geometries for the measurement setups.

4.2 Default conditions applicable to the test methods

4.2.1 Test environment

Unless otherwise specified, testing shall take place in an environment of temperature 23 °C ± 3 °C (73 °F ± 5 °F) and of non-condensing relative humidity from 40 % to 60 %.

4.2.2 Pre-conditioning

Where pre-conditioning is required by the test method, the identification tags to be tested shall be conditioned to the test environment for a period of 24 hours before testing.

4.2.3 Default tolerance

Unless otherwise specified, a default tolerance of ± 5 % shall be applied to the measured values specifying the characteristics of the test equipment (e.g. linear dimensions) and the test method procedures (e.g. test equipment adjustments).

4.2.4 Spurious inductance

In order to ensure consistent results, resistors and capacitors in the test equipment should have negligible inductance.

4.2.5 Noise floor at test location

It shall be 20 dB less than signal from the DUT within the frequency band of the test when measured according the applicable regulatory requirement for that band.

Special attention has to be given to spurious emissions, e.g., insufficiently shielded computer monitors. The electromagnetic test conditions of the measurements can be checked by performing the measurements with and without a tag in the field.

4.2.6 Total measurement uncertainty

The total measurement uncertainty for each quantity determined by these test methods shall be stated in the test report.

NOTE Basic information is given in “ISO Guide to the expression of uncertainty in measurement”, ISBN 92-67-10188-9, 1993.

© ISO/IEC 2006 – All rights reserved

Copyright International Organization for Standardization
Provided by IHS under license with ISO
No reproduction or networking permitted without license from IHS
Not for Resale

4.3 Setup of test equipment for tag tests

4.3.1 Parameter definition

4.3.1.1 Minimum tag activation magnetic field strength

It should be noted that this value shall be determined in order to perform the following test measurements and the recorded value is not a conformance criterion.

Once placed in a magnetic field strength and depending on antenna, chip and packaging design, each tag will be activated. Full functionality is obtained when the tag is supplied with enough energy to transmit correctly the information stored in the chip memory. This measurement will determine the minimum value of the magnetic field strength required to obtain the full functionality of the tag.

4.3.1.2 Level of tag response

For FDX mode: The level of tag response is defined by the difference of the level of tag response values measured for the bit 1 and the bit 0. These values of the level of tag response depend on the magnetic field strength in which the tag is placed. To get the appropriate characterisation, the level of tag response shall be monitored over different magnetic field strengths and presented as the modulation characteristic.

For HDX mode: The level of tag response is defined by the average value of the level of tag response values measured for the bit 1 and the bit 0.

© ISO/IEC 2006 – All rights reserved
Copyright International Organization for Standardization
Provided by IHS under license with ISO
No reproduction or networking permitted without license from IHS
Not for Resale

4.3.2 Test equipment configuration

4.3.2.1 Functional diagram

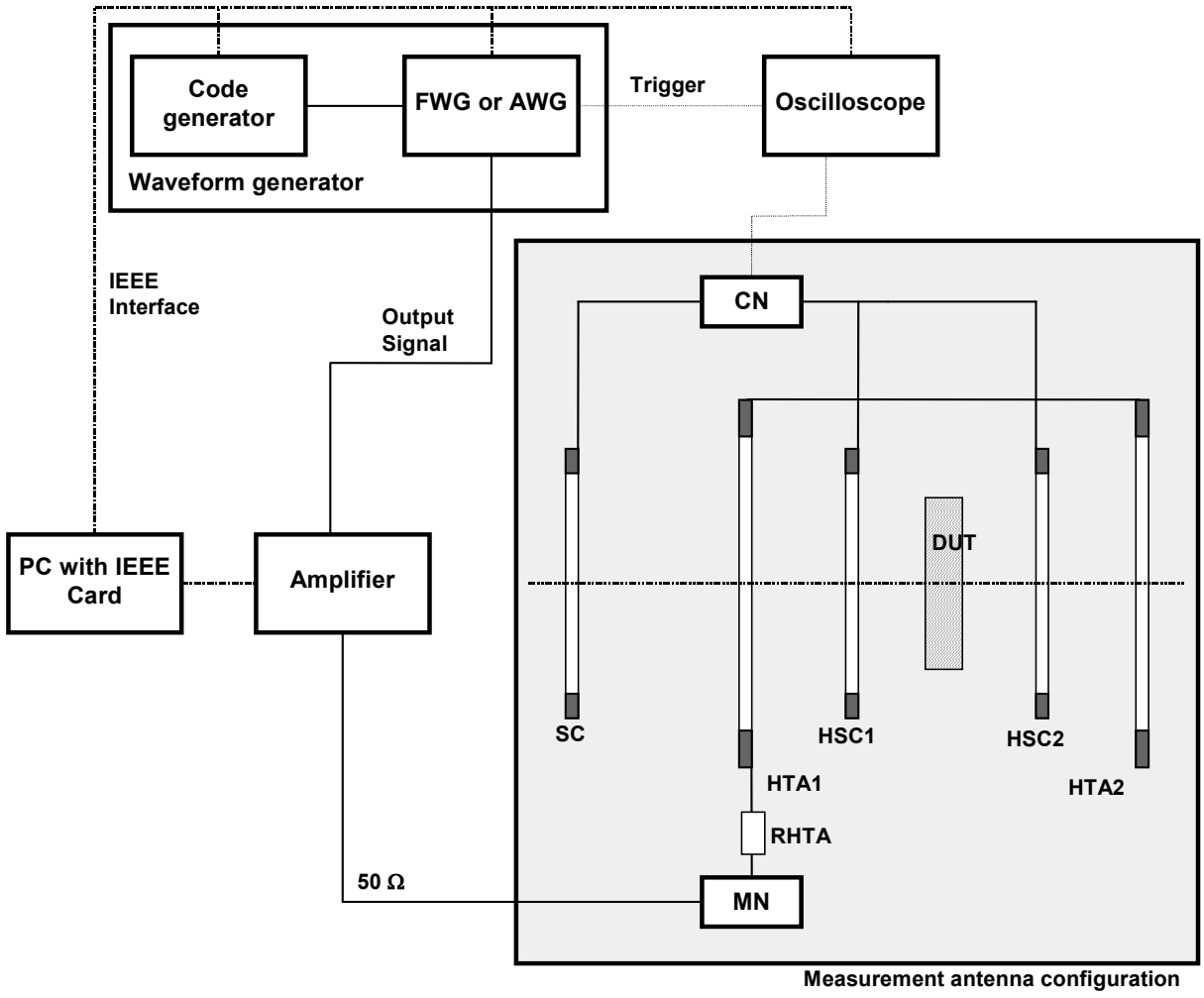

Figure 1 — Functional diagram

Amplifier: Amplifier with an output resistance of 50 Ω. (e.g. Amplifier Research 25A250A, 10 kHz – 250 MHz)

FWG: function waveform generator

AWG: arbitrary waveform generator

CN: compensation network

MN: matching network

HSC1: Helmholtz Sense Coil 1

HSC2: Helmholtz Sense Coil 2

HTA1: Helmholtz Transmitting Antenna 1

HTA2: Helmholtz Transmitting Antenna 2

RHTA Serial measurement resistor with 4,7 Ω

© ISO/IEC 2006 – All rights reserved

Copyright International Organization for Standardization
Provided by IHS under license with ISO
No reproduction or networking permitted without license from IHS
Not for Resale

The matching network MN shall be used to match the setup of RHTA, HTA1 and HTA2 to the 50 Ω output resistance of the Amplifier.

NOTE 1 The AWG may be used in place of the code generator and the FWG.

NOTE 2 Due to the setup of HTA1 and HTA2 their magnetic fields are cumulative at the position of the DUT.

NOTE 3 The dissipated power in the each of HTA1 and HTA2, as well as in RTHA is dependent of the current through the coils and may become as high as 20W for RTHA and 2W for each HTA coil while the applied power can rise up to 25W.

The capacitors C1 and C2 shall have a voltage rating of at least 100 V while the applied power can rise up to 25 W.

4.3.2.2 Measurement antenna configuration definition

The magnetic field is generated using a Helmholtz configuration of the transmitting antennas (HTA). Thus the generated field is homogenous in a sufficient area for the positioning of the DUT. The matching network (MN), is used to get a clean field generated while modulating the magnetic field.

There is a very accurate relation between the magnetic field in the Helmholtz coil and the current in the coils. By measuring the current through the HTA the magnetic field can be calculated.

$$H_{rms} = \frac{N_{HTA} \cdot U_{RHTA,PP}}{1.9764 \cdot D_{HTA} \cdot R_{RHTA}}$$

H_{rms} Effective value of the magnetic field strength

I_{RHTA} Current through the coils HTA1, HTA2 and the resistor RHTA

N_{HTA} Number of turns for each of HTA1 and HTA2

D_{HTA} Distance between the HTA coils

R_{RHTA} External serial measurement resistor

$U_{RHTA,PP}$ Peak-peak value of the voltage drop at external serial measurement resistor

Figure 1 is the functional diagram of the measurement antenna configuration. The dimension of the coils is small compared to some of the tags to be tested. The homogeneous field has a cylindrical shape with a diameter of 5 cm and a length of 5 cm. This configuration is useful for small tags only. Tags longer than 5 cm need larger antennas.

For the FDX mode the sensing of the level of tag response shall be performed using a three-coil configuration where two coils (HSC) shall be placed inside the Helmholtz configuration within the HTA and one SC shall be placed outside the HTA. The inside coils HSC1 and HSC2 will sense the generated field and the emitted modulation signal with a low influence of the coupling factor and the position of the tag unit. The external SC will sense only the generated field and can therefore be used as compensation signal by subtracting the generated field. The compensation network (CN) will deliver the emitted modulation signal to the oscilloscope that is based on the homogenous magnetic field only.

For the HDX mode the sensing of the level of tag response shall be performed using a two-coil configuration where the HSC shall be placed into a Helmholtz configuration within the two HTA. The HSC will sense the generated field and the emitted frequencies with a low influence of the coupling factor and the position of the tag unit and will deliver the bit value representing frequencies directly to the oscilloscope.

The external SC and the compensation network (CN) are not required for HDX frequency measurements because the interrogator field is switched off during transmission.

© ISO/IEC 2006 – All rights reserved
Copyright International Organization for Standardization
Provided by IHS under license with ISO
No reproduction or networking permitted without license from IHS
Not for Resale

NOTE The approximate relation between the magnetic field and the current through the coils HTA and the resistor RTHA is $H = 38.5 \times I_{RHTA}$ in A/m.

4.3.2.3 Equipment

4.3.2.3.1 General

To allow fully automated testing, all below mentioned equipment should use the same communication interface as for example the IEEE 60488 interface (see Bibliography) or any other suitable standardised type.

This standardised communication interface will allow control of the instruments and the collection of data from the test configuration. The automated collection of data will allow the efficient processing of the required measurements. The test configuration in this document allows fully automated testing.

4.3.2.3.2 Magnetic field generation

The magnetic field shall be generated by a Function Waveform Generator (FWG) or AWG, (e.g., a device with an IEEE 60488 Interface) and the HTAs.

The HTA configuration shall be manufactured according to the physical parameters as shown in Figure 3.

The properties of each coil shall be according to Figure 2.

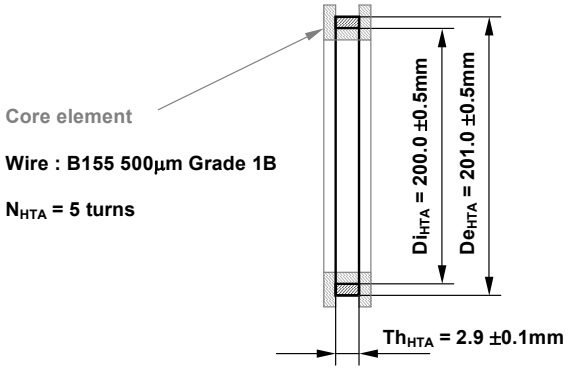

Figure 2 — Specification of HTA coils

NOTE 1 Due to the low number of turns, the best way of manufacturing the two HTA coils is to wind them onto formers.

NOTE 2 At 100 kHz the approximate inductance is 16 µH and the approximate resistance is 0,4 Ω.

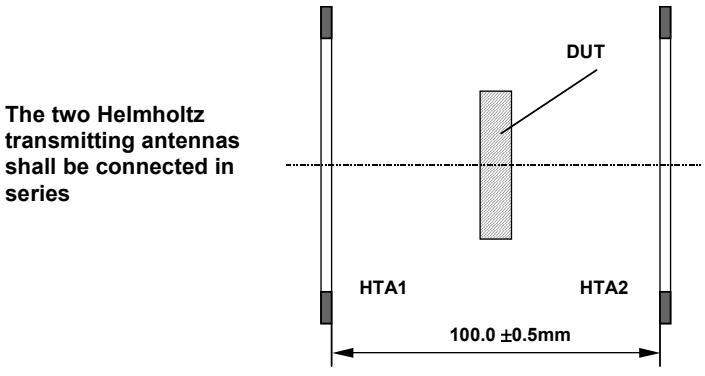

Figure 3 — Helmholtz setup

© ISO/IEC 2006 – All rights reserved

Copyright International Organization for Standardization
Provided by IHS under license with ISO
No reproduction or networking permitted without license from IHS
Not for Resale

4.3.2.3.3 Matching network

The matching network shall be realized according Figure 4.

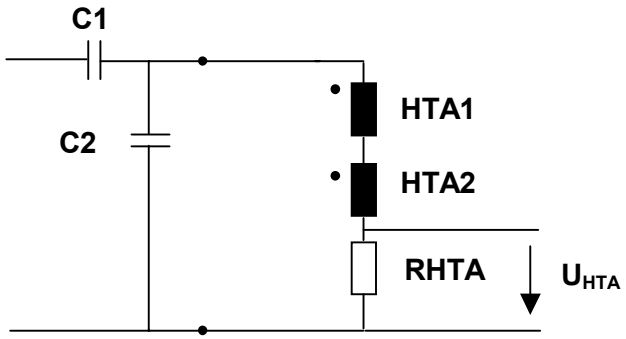

Figure 4 — Matching network and magnetic field generating coils

C1 and C2 shall be adjusted to match RHTA, HTA1 and HTA2 to the 50 Ω of the amplifier output. In particular this requires a matching network for either 125 kHz or 134,2 kHz according to the device under test.

Values for C1, C2 and RHTA shall be adjusted around the start values of Table 1 for 125 kHz and Table 2 for 134,2 kHz according to the device under test.

Table 1 — Matching components for 125 kHz

Component	Value	Comments
C1	18 nF	
C2	35 nF	
RHTA	5 Ω	

Table 2 — Matching components for 134,2 kHz

Component	Value	Comments
C1	15 nF	
C2	30 nF	
RHTA	5 Ω	

NOTE The value of 5 ohms for RHTA in the tables take into account the series resistance of the HTA coils that have an approximate value of 0,4 Ω.

4.3.2.3.4 Magnetic field reception

The magnetic field from the tag shall be measured with sensing coils: a set of two coils, HSC1 and HSC2, using a Helmholtz configuration, and only for the FDX mode, an additional coil SC for compensation. The two HSC shall be connected in series. The properties of each coil shall be manufactured according to the physical parameters as shown in Figure 5.

© ISO/IEC 2006 – All rights reserved
Copyright International Organization for Standardization
Provided by IHS under license with ISO
No reproduction or networking permitted without license from IHS
Not for Resale

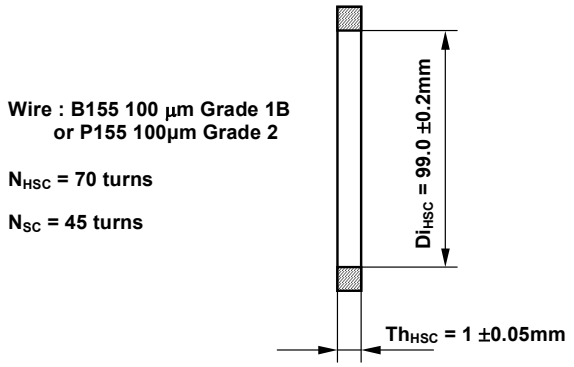

Figure 5 — Specification of Helmholtz sensing coils (HSC) and the sense coil (SC)

NOTE At 100 kHz the approximate inductance and resistance for the HSC coils are respectively 1,5 mH and 55Ω while for SC coil the values are 650 µH and 35 Ω.

Further it is useful to control the measurement setup with a PC with interface allowing full control of the used instruments (e.g., a device with an IEEE 60488 Interface).

The compensated field measurement coil configuration shall use three coils disposed in specific orientations. The HSC measures the modulated magnetic field emitted by the tag. The other SC measures the magnetic field, which is less modulated. So the combining of both signals from SC and HSC through the compensation network will allow the nulling of the magnetic field generated by the HTA. The Helmholtz configuration of the sensing coils is needed to reduce the position sensitivity of the tag under test.

The HSC and the SC shall be connected by the (CN) compensation network and configured according to the schematic diagram shown in Figure 6.

When carrying out test for FDX devices the compensation network variable potentiometer P1 is adjusted until the magnetic field received by the HSC1, HSC2 and SC coils results in lowest voltage measured with the oscilloscope. The potentiometer P1 compensates for variations in the physical configuration, component tolerances and electrical mismatch.

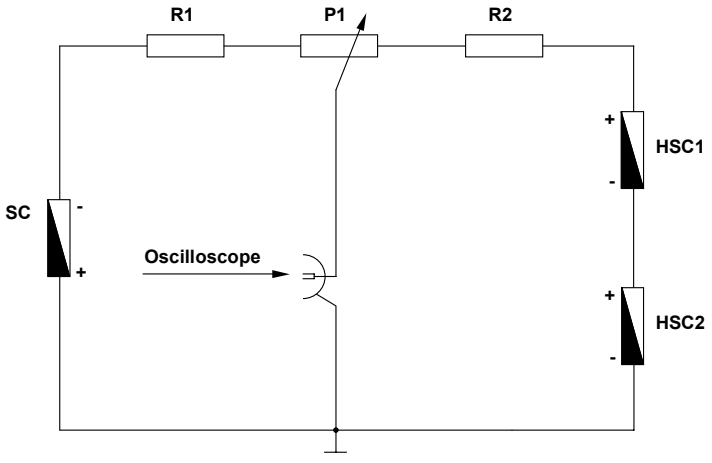

Figure 6 — Compensation network

R1 = 15 kΩ

R2 = 100 kΩ

P1 = 10 kΩ

--`,,```,,,,````-`-`,,`,,`,`,,`---
© ISO/IEC 2006 – All rights reserved
Copyright International Organization for Standardization
Provided by IHS under license with ISO
No reproduction or networking permitted without license from IHS
Not for Resale

Resolved with the following text:

If the maximum value of P1 is insufficient to provide compensation, this indicates that:

— The mechanical positioning is not correct or

— The resistive compensation bridge has excessive stray capacitance or

— The resistive compensation bridge is imbalanced due to stray capacitance.

In this case the set up of the coils and the layout of the compensation network should be checked.

In order to avoid the harmful effect of the stray capacitance of the resistors on the nulling capability of the Compensation Network, the resistance R2 shall be realized with several series resistors as all resistor components used for R1 and R2, are in a same close value. The package and technology will be the same. (e.g. R1 is made up with six resistor components with a value of 15 kΩ and one resistor component with a value of 10 kΩ soldered in series while R2 is made up with one resistor component).

The used oscilloscope probe shall have at least an input resistance of > 10 MΩ and an input capacitance of < 20 pF.

The two HSC shall be centred in between the two HTA. The external sensing coil if needed shall be placed as shown in Figure 7 below.

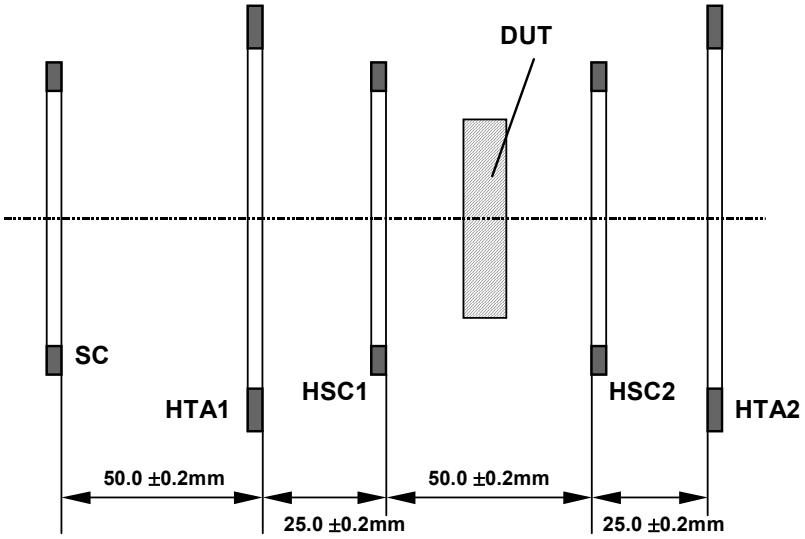

Figure 7 — Arrangement of the HSC

4.3.2.4 Digital sampling oscilloscope

The digital sampling oscilloscope shall be capable of sampling at a rate of at least 5 million samples per second with a resolution of at least 8 bits at optimum scaling. The oscilloscope should have the capability to output the sampled data as a text file to facilitate mathematical and other operations such as windowing on the sampled data using external software programmes. An example of the programme is shown in Annex B.

© ISO/IEC 2006 – All rights reserved
Copyright International Organization for Standardization
Provided by IHS under license with ISO
No reproduction or networking permitted without license from IHS
Not for Resale

4.4 Test methods for tags

4.4.1 Tag Orientation

The system has been designed so that minor positioning errors will not influence the measurements results. Nevertheless, to get reproducible measurements the tag position has to be well defined.

— In case of an air-core tag its orientation shall be parallel to the transmitting antenna plane (Figure 8).

— In case of a ferrite-core tag its orientation shall be perpendicular to the transmitting antenna plane (Figure 8).

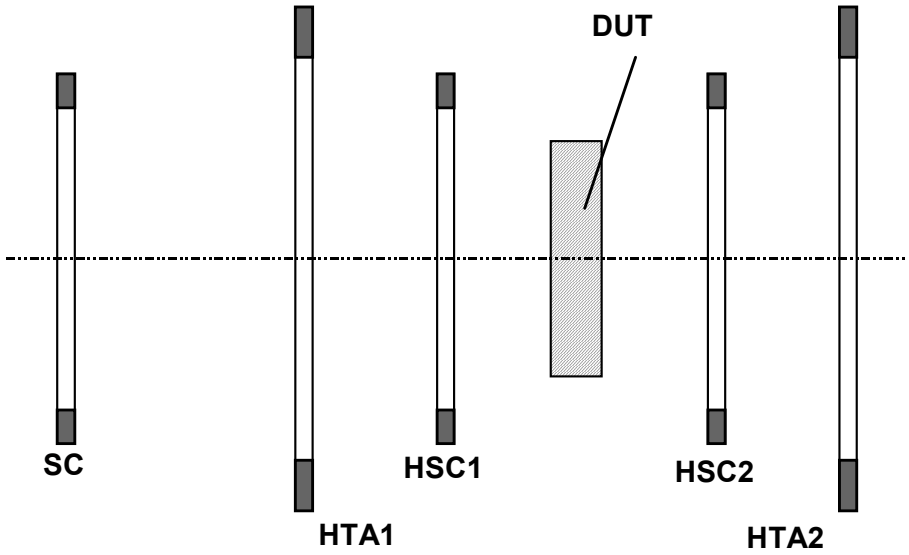

Figure 8 — Tag orientation

4.5 Test procedure for tags

4.5.1 Calibrating null compensation

4.5.1.1 Purpose

The aim of this test is to compensate all the mechanical and electrical mismatches of the measurement antenna configuration. The compensation network shall be adjusted until the noise level is at the minimum level achievable. The procedure shall be repeated before each measurement series or after each mechanical intervention, each equipment change or test location change.

4.5.1.2 Setup conditions

— All interconnections should be checked and all equipment should be switched on.

— The test report shall give the measured parameters defined in subsequent clauses that establish the nulling conditions.

© ISO/IEC 2006 – All rights reserved

Copyright International Organization for Standardization
Provided by IHS under license with ISO
No reproduction or networking permitted without license from IHS
Not for Resale

4.5.1.2.1 Procedure in FDX mode

— The waveform generator shall be set to the required operating frequency of 125 kHz with continuous sine wave and not generate any pattern.

— The antenna current shall be set to produce a magnetic field strength of 1 A/m.

— The potentiometer P1 shall be adjusted to null the bridge, which results in the minimum residual voltage measured on the oscilloscope.

— After adjusting P1, the null condition shall then be verified for three values of magnetic field strength. These values are 1 A/m, then 0,1 A/m and finally 10 A/m. The following procedure is used for each of those values:

1) the current shall be set to produce the appropriate magnetic field strength with steady state wave;

2) a segment of 25 ms of the compensated field measurement coil configuration output signal is displayed and recorded using a digital oscilloscope with a sampling rate of at least 5 million samples per second;

3) a discrete Fourier transform shall be done on this recorded signal at the two frequency values $f_{UP} = (1+1/32).f_C$ and $f_{DOWN} = (1-1/32).f_C$, where f_c is 125 kHz.

— The result of the Fourier Transformation shall be recorded in a result table like Table 3 and it shall be used for each of the following measurements, which are only accepted as successful if the result with pattern is at least 10 times higher than this result without a pattern.

4.5.1.2.2 Procedure in HDX mode

— The waveform generator shall be turned off.

— A segment of 25 ms of the signal at the output of the two coil configuration, HSC1 and HSC2, is displayed and recorded using a digital oscilloscope with a sampling rate of at least 5 million samples per second.

— A discrete Fourier transform shall be performed on this recorded signal at the two frequency values f_C = 134,2kHz and f_1 = 123.7kHz.

— The result of the Fourier Transformation shall be recorded in a result table like Table 3 and it shall be used for each of the following measurements, which are only accepted as successful if the result with pattern is at least 10 times higher than this result without a pattern.

Table 3 — Parameters that shall be recorded for each measurement

Test type:	Residual voltage level
Magnetic field value:	0,1A/m, 1A/m & 10A/m
Waveform Generator frequency:	xx kHz
RMS residual voltage level:	xx mV
Ambient temperature:	xx °C
Ambient humidity (Relative value):	xx %

© ISO/IEC 2006 – All rights reserved
Copyright International Organization for Standardization
Provided by IHS under license with ISO
No reproduction or networking permitted without license from IHS
Not for Resale

4.5.2 Minimum activating magnetic field strength in FDX mode

The purpose of this measurement is to determine the minimum magnetic field strength value for which the tag under test can receive a request and transmit a correct response. For this test, the oscilloscope data shall be processed e.g. by the PC that the SUID code can be readout from the received data stream. The code shall be complete, checked against the CRC information and send inside a time window, which corresponds to the theoretical maximum acceptable time window.

— The constant magnetic field nulling procedure shall be performed.

— The waveform generator shall be set to the required operating frequency (125 kHz) and generate the ISO/IEC 18000-2 interrogation pattern (Inventory command with inventory flag not set and one slot).

— The antenna current shall be set to a value to get a magnetic field of 1 A/m and then the field will be changed by decreasing the current until there is no response.

— The antenna current shall then be increased until there is a tag response again and then by another 10%. The magnetic field strength generated by this resulting current defines the minimum activating magnetic field strength.

— The voltage pattern measured on the CN with the oscilloscope over 25 ms shall be recorded.

— The data stream to extract the SUID code which has to be sent inside the time window shall be processed.

— The SUID and the corresponding magnetic field strength shall be recorded according to Table 4.

Table 4 — Parameters that shall be recorded for each measurement

Test type:	Minimal activating magnetic field strength in FDX mode
Waveform Generator frequency:	xx kHz
SUID code:	xxxxxxxxxx
Minimal activating magnetic field value:	xx A/m
Ambient temperature:	xx °C
Ambient humidity (Relative value):	xx %

4.5.3 Minimal activating magnetic field strength in HDX mode

The purpose of this test is to verify whether the tag supports the minimum magnetic field strength values for which the tag transmits the correct data sequence. For this test, the oscilloscope data shall be processed e.g. by the PC that the SUID code can be read out from the received data stream. The code shall be complete, checked against the CRC information and send inside a time window, which corresponds to the theoretical maximal acceptable time window.

— The constant magnetic field nulling procedure shall be performed.

— The waveform generator as defined in 4.3.2 shall be set to the required operating frequency (134,2 kHz) and generate the ISO/IEC 18000-2 interrogation pattern.

— The antenna current shall be set to a value to get a magnetic field of 1 A/m and then the field will be changed by decreasing the current until there is no response.

© ISO/IEC 2006 – All rights reserved

Copyright International Organization for Standardization
Provided by IHS under license with ISO
No reproduction or networking permitted without license from IHS
Not for Resale

— The antenna current shall then be increased until there is a tag response again and then by another 10%. The magnetic field strength generated by this resulting current defines the minimum activating magnetic field strength.

— The voltage pattern measured on the HSC with the oscilloscope over 25 ms shall be recorded.

— The data stream to extract the SUID code which has to be sent inside the time window shall be processed.

— The SUID and the corresponding magnetic field strength shall be recorded according to Table 5.

Table 5 — Parameters that shall be recorded for each measurement

Test type:	Minimal activating magnetic field strength in HDX mode
Waveform Generator frequency:	xx kHz
SUID code:	xxxxxxxxxx
Minimal activating magnetic field value:	xx A/m
Ambient temperature:	xx °C
Ambient humidity(Relative value):	xx %

4.5.4 Level of tag response in FDX mode

The aim of this test is to define the level of tag response of the tag from the minimal activating field strength value up to a magnetic field strength value of 50A/m. For this test, the oscilloscope data shall be processed e.g. by the PC that the side band levels of the received data stream can be defined.

— The constant magnetic field nulling procedure shall be performed.

— The waveform generator shall be set to the required operating frequency (125 kHz) and generate the ISO/IEC 18000-2 interrogation pattern.

— The antenna current shall be set to a value to the determined minimal activating magnetic field strength.

— The voltage pattern measured on the CN with the oscilloscope over 100 ms shall be recorded.

— The voltage pattern measured on the CN with the oscilloscope to cover 2 consecutive bits with the logical value of 0 shall be recorded.

— The discrete Fourier transform shall be done at the exact sidebands frequencies generated by the tag under test, i.e. fUP = (1+1/32).fC and fDOWN = (1-1/32).fC (in case of inventory command with inventory flag not set the bit duration is 32/fC , and the bits coding is a Manchester code). This computation shall be applied on a recorded signal for a sequence of exactly an integer number of data bit representing the same digital value. To minimize transient effects, the first and last bits of the tag response shall be avoided.

— The level of tag response value shall be extracted by the use of a Fourier Transformation.

— The result of the Fourier Transformation shall be recorded in a result table according to Table 6.

© ISO/IEC 2006 – All rights reserved
Copyright International Organization for Standardization
Provided by IHS under license with ISO
No reproduction or networking permitted without license from IHS
Not for Resale

Table 6 — Example of result table

Magnetic field strength	Level of tag response A_{up}	Level of tag response A_{down}
[A/m]	[V]	[V]
Minimal activating value	X-Y	X-Y
…	…	…
50 A/m	R-S	R-S

— The magnetic field strength shall be increased alternating with an increasing step of the factor of 2 and 5 (e.g. 0,1; 0,2; 0,5; 1, 2 5, 10, … 50).

— The measurements shall be repeated up to H = 50 A/m and recorded according to Table 7.

Table 7 — Parameters that shall be recorded for each measurement

Test type:	Level of tag response in FDX mode
Waveform Generator frequency:	Xx kHz
SUID code:	Xxxxxxxxxx
Magnetic field value:	Xx A/m
Level of tag response A_{up}	Xx V
Level of tag response A_{down}	Xx V
Ambient temperature:	Xx °C
Ambient humidity (Relative value):	Xx %

4.5.5 Level of tag response in HDX mode

The aim of this test is to define the level of tag response of the tag from the minimal activating field strength value up to a magnetic field strength value of 50A/m. For this test, the oscilloscope data shall be processed by the PC in such a way that the voltage level of the received data stream can be defined. The final value shall consider 10 consecutive bits starting 10 ms after the start of the header.

— The waveform generator shall be set to the required operating frequency (134,2 kHz) and generate the ISO/IEC 18000-2 interrogation pattern.

— The antenna current shall be set to provide the minimum activating magnetic field strength.

— The voltage pattern measured on the HSC with the oscilloscope over 10 consecutive bits following 10 ms after the start of the header shall be recorded.

— The discrete Fourier transform shall be done at the two subcarrier values, i.e. f_C = 134,2kHz and f_1 = 123,7kHz ±4,2kHz and shall be applied on a recorded signal for several subcarrier cycles over a sequence of several data bit representing the appropriate digital value: i.e. the '0' digital value for the level at f_C and the '1' digital value for the level at f_1 . In a same way the frequency value of the subcarrier f_1 can be verified by calculation. To minimize transient effects, the first and last bits of the tag response shall be avoided.

— The level of tag response value shall be extracted by the use of a Fourier Transformation.

— The result of the Fourier Transformation shall be recorded according to Table 8.

© ISO/IEC 2006 – All rights reserved

Copyright International Organization for Standardization
Provided by IHS under license with ISO
No reproduction or networking permitted without license from IHS
Not for Resale

Table 8 — Parameters that shall be recorded for each measurement

Test type:	Level of tag response in HDX mode A_{fc}	Level of tag response in HDX mode A_{f1}
Waveform Generator frequency:	xx kHz	xx kHz
SUID code:	xxxxxxxxxx	xxxxxxxxxx
Level of tag response:	xx V	xx V
Ambient temperature:	xx °C	xx °C
Ambient humidity (Relative value):	xx %	xx %

— The magnetic field strength shall be increased alternating with an increasing step of the factor of 2 and 5 (e.g. 0,1; 0,2; 0,5; 1, 2 5, 10, … 50).

— The measurements shall be repeated up to H = 50 A/m.

4.5.6 Tag waiting time for FDX mode

The aim of this test is to verify the interrogator command request to tag response turn around time, which is a prime requirement to be able to detect bit wise collision.

— The constant magnetic field nulling procedure shall be done.

— The waveform generator shall be set to the required operating frequency (125 kHz) and generate the ISO/IEC 18000-2 Inventory command request pattern with 1 time slot.

— The antenna current shall be set to produce twice the minimum activating magnetic field strength.

— The voltage pattern measured on the CN with the oscilloscope covering at least the Inventory command request end and the Inventory response begin shall be recorded.

— It shall be verified that the time between the end of the Inventory command request end and the Inventory Response begin fulfils the specification as defined in the protocol timing specifications. For measuring of the response time, the definitions for the Inventory command request end and Inventory Response begin of the base standard shall be used.

— The magnetic field strength shall be increased alternating with an increasing step of the factor of 2 and 5 (e.g. 0,1; 0,2; 0,5; 1, 2 5, 10, … 50).

— The measurements shall be repeated up to H = 50 A/m.

The time between the end of the Inventory Command request end and the Inventory Response begin shall fulfil the specification as defined in the protocol timing specifications.

4.5.7 Tag waiting time for HDX mode

The aim of this test is to verify the interrogator command request to tag response turn around time, which is a prime requirement to be able to detect bit wise collision.

— The waveform generator shall be set to the required operating frequency (134,2 kHz) and generate the ISO/IEC 18000-2 Inventory command request pattern with 1 time slot.

— The antenna current shall be set to produce twice the minimum activating magnetic field strength.

© ISO/IEC 2006 – All rights reserved
Copyright International Organization for Standardization
Provided by IHS under license with ISO
No reproduction or networking permitted without license from IHS
Not for Resale

— The voltage pattern measured on the CN with the oscilloscope covering at least the Inventory command request end and the Inventory response begin shall be recorded.

— It shall be verified that the time between the end of the Inventory Command request end and the Inventory Response begin fulfils the specification as defined in the protocol timing specifications. For measuring of the response time, the definitions for the Inventory Command request end and Inventory Response begin of the base standard shall be used.

— The magnetic field strength shall be increased alternating with an increasing step of the factor of 2 and 5 (e.g. 0,1; 0,2; 0,5; 1, 2 5, 10, … 50).

— The measurements shall be repeated up to H = 50 A/m.

The time between the end of the Inventory Command request end and the Inventory Response begin shall fulfil the specification as defined in the protocol timing specifications.

4.6 Equipment for interrogator tests

4.6.1 Tag Emulation Circuit

The Tag Emulation Circuit (TEC) shall be used as device for a FDX and HDX tag, which is reproducible in every laboratory, whenever needed. It is composed from standard components and thus avoids that those deviations, due to progress in technology or spread in production of commercially available tag.

The Tag Emulation Circuits shall be built according to the design descriptions given in Annex A.

4.7 Methods for interrogator tests

4.7.1 Verification of reading

The method described below is applied to both of the paths:

— Interrogator to tag link: Activation field strength parameter.

— Tag to Interrogator link: Sensitivity parameter.

4.7.2 Tag Orientation

The "Optimum Orientation" is generally defined for the different antenna types as follows.

4.7.2.1 Interrogator with an air-cored antenna under test

In case of an air-cored tag antenna its orientation shall be parallel to the antenna plane as shown in Figure 9.

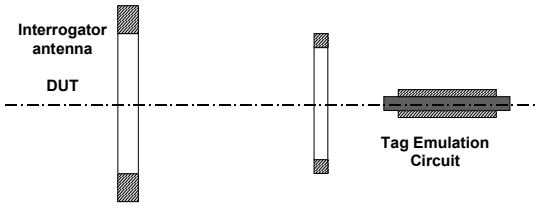

Figure 9 —Interrogator with an air-cored antenna under test

© ISO/IEC 2006 – All rights reserved
Copyright International Organization for Standardization
Provided by IHS under license with ISO
No reproduction or networking permitted without license from IHS
Not for Resale

4.7.2.2 Interrogator with a ferrite-cored antenna under test

In the case of an air-cored tag antenna the orientation of the antenna plane shall be perpendicular to the axis of the ferrite-cored antenna of the interrogator under test as shown in Figure 10.

In the case of a ferrite-cored tag antenna its orientation shall be in line with the antenna axis of the ferrite-cored antenna of the interrogator under test as shown in Figure 10.

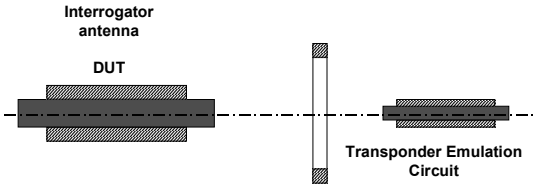

Figure 10 — Interrogator with a ferrite-cored antenna under test

The measurements shall be performed in optimum tag orientation.

4.8 Test procedure for interrogator

4.8.1 Modulation index and waveform

The aim of this test is to verify the waveform of the interrogator field when is modulated, i.e. the modulating coding times values as it is defined in base standard.

— The interrogator shall be set to generate the ISO/IEC 18000-2 Inventory command request pattern.

— The reference air-cored antenna (Annex A.1) is positioned on a medium position in the operating volume defined by the manufacturer, a high impedance oscilloscope probe is connected to the coil to measure the (open circuit) induced voltage.

NOTE The ground connection of the probe should be as short as possible.

— Thus determine the modulation index and waveform characteristics from the induced voltage on the coil displayed on a suitable oscilloscope.

The test report shall give the measured values of the modulation coding times defined in the base standard.

4.8.2 Power generation for FDX (informative)

The aim of this test is to verify the whether the interrogator provides enough power to supply type A (FDX) tags.

When the interrogator is providing a continuous carrier, the Tag Emulation Circuit shall be placed at a distance from the interrogator antenna in the optimum orientation according to 4.7.2 such that it receives a voltage VDC (see Annex A.2) of 2 V.

The distance shall be recorded.

The test requirement shall be seen as fulfilled, when the achieved distance between the Tag Emulation Circuit antenna and the Interrogator antenna is at least 1 cm.

-`,,```,,,,````-`-`,,`,,`,`,,`---
© ISO/IEC 2006 – All rights reserved
Copyright International Organization for Standardization
Provided by IHS under license with ISO
No reproduction or networking permitted without license from IHS
Not for Resale

4.8.3 Power generation for HDX (informative)

The aim of this test is to verify the whether the interrogator provides enough power to supply type B (HDX) tags.

When the interrogator is providing a continuous carrier, the Tag Emulation Circuit shall be placed at a distance from the interrogator antenna in the optimum orientation according to 4.7.2 such that it receives a voltage VCL (see Annex A.3) of 5 V at the end of the 50 ms charge phase.

The distance shall be recorded.

The test requirement shall be seen as fulfilled, when the achieved distance between the Tag Emulation Circuit antenna and the Interrogator antenna is at least 1 cm.

4.8.4 Response detection for FDX

The aim of this test is to verify the ability of the interrogator to receive data from the tags.

When the interrogator is providing a continuous carrier, the Tag Emulation Circuit shall be placed in a distance to the interrogator antenna that it receives a voltage VDC of 3 V.

The distance shall be recorded.

The test requirement is fulfilled, when the interrogator successfully receives each bit of an Inventory command response pattern generated by the Tag Emulation Circuit.

4.8.5 Response detection for HDX

The aim of this test is to verify the ability of the interrogator to receive data from the tags.

When the interrogator is providing a continuous carrier, the Tag Emulation Circuit shall be placed in a distance to the interrogator antenna that it receives a voltage VCL of 5 Vpp at the end of the 50 ms charge period.

The distance shall be recorded.

The test requirement is fulfilled, when the interrogator successfully receives each bit of the Inventory command response pattern generated by the Tag Emulation Circuit with an AWG output voltage at 50 Ω of 5 V_{PP}.

© ISO/IEC 2006 – All rights reserved

Copyright International Organization for Standardization
Provided by IHS under license with ISO
No reproduction or networking permitted without license from IHS
Not for Resale

Annex A
(normative)
Design description of the tag emulation circuits

A.1 Reference air-cored antenna

A reference air-cored antenna design shall be based on the parameters specified in Table A.1.

Table A.1 — Reference air-cored antenna parameters

Component	Value in FDX mode	Value in HDX mode	Comments
Inner coil diameter	15,7 mm	15,7 mm	Reference air-cored antenna dimensions
Outer coil diameter	18,4 mm	18,4 mm	Reference air-cored antenna dimensions
Coil thickness	1 mm	1 mm	Reference air-cored antenna dimensions
Coil wire	B155 50 µm Grade 1B	B155 70 µm Grade 1B	Reference air-cored antenna
Number of turns	400	260	CC shall be sufficiently low that the antenna self oscillation is at least 5 times the carrier frequency.
CC			CC shall be sufficiently low that the antenna self oscillation is at least 5 times the carrier frequency.

A.2 FDX Tag Emulation Circuit

A.2.1 General

The FDX Tag Emulation Circuit shall be built from standard components, which are commercially available. The circuit diagram of the Tag Emulation Circuit shall be done as shown in Figure A.1 using the circuit parameters according table A.2.

© ISO/IEC 2006 – All rights reserved
Copyright International Organization for Standardization
Provided by IHS under license with ISO
No reproduction or networking permitted without license from IHS
Not for Resale

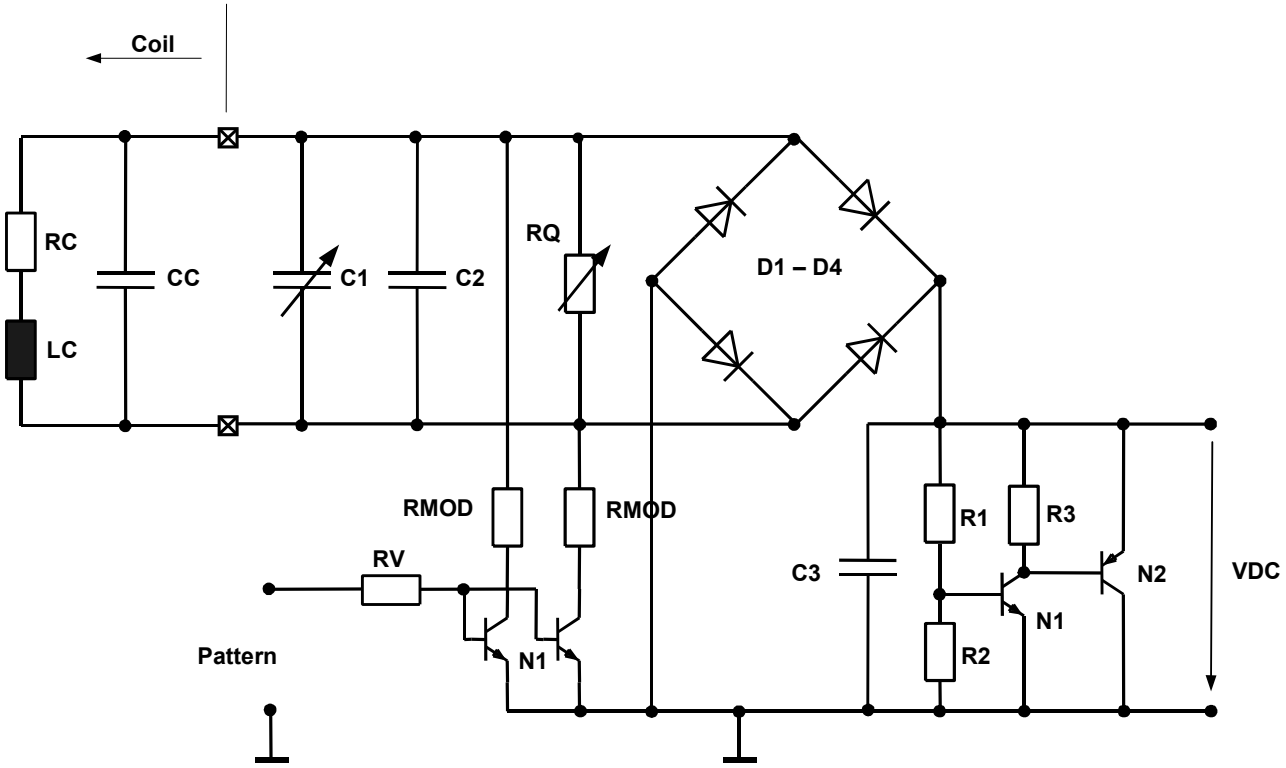

Figure A.1 — FDX Tag Emulation Circuit

--`,,```,,,,````-`-`,,`,,`,`,,`---
© ISO/IEC 2006 – All rights reserved
Copyright International Organization for Standardization
Provided by IHS under license with ISO
No reproduction or networking permitted without license from IHS
Not for Resale

Table A.2 — FDX Tag Emulation Circuit parameters

Component	Value	Comments
LC (Inductance)	6,5mH	Reference air-cored inductance
QL factor	30	Reference air-cored antenna Q factor
RC factor	2 π LC / QL	Reference air-cored antenna Q resistance
C1	3,5 to 22 pF	Trimmer to adjust resonance frequency
C2	200 pF	Use NP0 capacitors. Place two 100 pF capacitors in parallel to get 200 pF with commonly available devices.
C3	10 nF	
D1 - D4	1N4148	
N1	BC 546B	
N2	BC 556B	
R1	430 kΩ	
R2	51 kΩ	
R3	20 kΩ	
RMOD	1,8 kΩ	
RV	1 kΩ	
RQ	100 to 220 kΩ	Trimmer for a resulting QLC of 30

The QL of the Tag Emulation Circuit antenna (LC and RC) shall be set up with the antenna removed from the emulation circuit and connected to a frequency analyser.

A.2.2 Set up trimming

For the measurement of the voltage a voltmeter with an input impedance of > 10 MΩ shall be used.

The Tag Emulation Circuit shall be tuned by modifying RQ to achieve a resulting QLC of 30 and by adjusting C1 to get the maximum VDC voltage before the tests are started.

It is recommended to do the procedure as follows.

— The reference air-cored antennas are connected in parallel to the tuning capacitor (C2 or CS) and to the Q factor trimmer resistor (RQ).

— Such a parallel resonator is placed within the HTA coils, while an oscilloscope probe measure the voltage over the LC circuit.

— the frequency of the wave generator connected to the field generating antenna (HTA) is adjusted to find the maximum voltage from the LC circuit antenna under test. The frequency f_0 and the voltage level A_0 are noted.

— Then both increase and decrease the frequency from the frequency f_0 to find the two frequencies f_1 and f_2 where the voltage level is 0.707 times the voltage level A_0.

— Calculate the Q-factor as $Q = f_0 /(f_2 – f_1)$, and re-adjust the Q factor trimmer resistor RQ consequently.

--`,,```,,,,````-`-`,,`,,`,`,,`---

© ISO/IEC 2006 – All rights reserved
Copyright International Organization for Standardization
Provided by IHS under license with ISO
No reproduction or networking permitted without license from IHS
Not for Resale

A.3 The HDX Tag Emulation Circuit

A.3.1 General

The HDX Tag Emulation Circuit shall be built from standard components, which are commercially available. The circuit diagram of Tag Emulation Circuit shall be done as shown in Figure A.2 using the circuit parameters according table A.3.

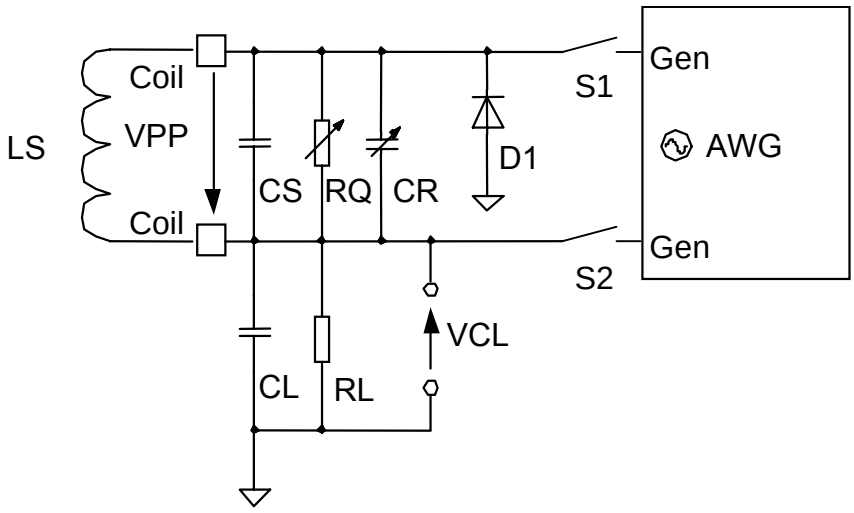

Figure A.2 — HDX Tag Emulation Circuit

For power generation measurements the switches S1 and S2 shall be open in order to disconnect the Tag Emulation Circuit, which shall be tuned to a resonance frequency of 134,2 kHz.

For response detection measurements the switches S1 and S2 shall be closed for the use of the AWG to generate the response pattern.

Table A.3 — Component Values for HDX Emulator

Component	Value	Comments
LS	2,66 mH	
CS	530pF	Use NP0 capacitors
CR	0 to 39 pF	Trimmer
D1	1N4148	
CL	220 nF	
RL	1,6 MΩ	
RQ	100 kΩ to 220 kΩ	Trimmer for a resulting QLC of 60

The QLC of the Tag Emulation Circuit antenna (LS and RQ) shall be set up with the antenna removed from the emulation circuit and connected to a frequency analyser.

Provisions shall be taken, that the AWG is triggered to emit the ISO data stream, after the 50 ms charge phase (134,2 kHz) of the Interrogator under test is terminated (time slots in ISO/IEC 18000-2).

© ISO/IEC 2006 – All rights reserved

Copyright International Organization for Standardization
Provided by IHS under license with ISO
No reproduction or networking permitted without license from IHS
Not for Resale

A.3.2 Working principle of the HDX Tag Emulation Circuit:

An AWG shall drive the HDX Tag Emulation Circuit with its standard 50 Ω output in a way that the worst case situation of the return signal is simulated. The AWG shall stimulate the NRZ encoded, FSK modulated return signal at 124 ± 2 kHz to transmit a binary '1' and 134,2 ± 1,5 kHz to transmit a binary '0'. The duration of each bit shall be defined to last 16 cycles. The AWG shall generate the ISO data stream either by its own or it may be driven by an external controller, which delivers the binary information of a 112 bit data telegram as defined in ISO/IEC 18000-2.

A.3.3 Set up and trimming procedure for the HDX emulation:

For the measurement of the voltage a voltmeter with an input impedance of > 10 MΩ shall be used.

For any VCL measurements, the AWG shall be removed.

The Tag Emulation Circuit shall be tuned by modifying RQ to achieve a resulting QLC of 60 and by adjusting CL to get the maximum VCL voltage before the tests are started.

It is recommended to do the procedure as follows.

— The reference air-cored antennas are connected in parallel to the tuning capacitor (C2 or CS) and to the Q factor trimmer resistor (RQ).

— Such a parallel resonator is placed within the HTA coils, while an oscilloscope probe measure the voltage over the LC circuit.

— The frequency of the wave generator connected to the field generating antenna (HTA) is adjusted to find the maximum voltage from the LC circuit antenna under test. The frequency f_0 and the voltage level A_0 are noted.

— Then both increase and decrease the frequency from the frequency f_0 to find the two frequencies f_1 and f_2 where the voltage level is 0.707 times the voltage level A_0.

— Calculate the Q-factor as $Q = f_0 /(f_2 – f_1)$, and re-adjust the Q factor trimmer resistor RQ consequently.

© ISO/IEC 2006 – All rights reserved
Copyright International Organization for Standardization
Provided by IHS under license with ISO
No reproduction or networking permitted without license from IHS
Not for Resale

Annex B
(informative)
Program for the evaluation of the spectrum

The following program written in C language gives an example of the calculation of the magnitude of the spectrum from the tag.

```
/*************************************************************/
/***  This program calculates the fourier coefficients       ***/
/***  of load modulated voltage of a tag                     ***/
/***  The coefficients are calculated for the frequency      ***/
/***    Carrier:            125 kHz    134.2 kHz             ***/
/***    see #define N_FSUB:   32            28               ***/
/*************************************************************/
/*** Input:                                                  ***/
/***  File in CSV Format containing a table of two           ***/
/***  columns (time and test In. output voltage vd, clause 7)***/
/***                                                         ***/
/***  data format of input-file:                             ***/
/***  -------------------------                              ***/
/***  - one data-point per line:                             ***/
/***     {time[seconds], sense-coil-voltage[volts])          ***/
/***  - contents in ASCII, no headers                        ***/
/***  - data-points shall be equidistant time                ***/
/***  - minimum sampling rate: 100 MSamples/second           ***/
/***  - modulation waveform centred                          ***/
/***      (max. tolerance: half of subcarrier cycle)         ***/
/***                                                         ***/
/***   |------------------------cc-----------------------|   ***/
/***  example for spreadsheet file (start in next line):     ***/
/***   (time)      (voltage)                                 ***/
/***  3.00000e-06 , 1.00                                     ***/
/***  3.00200e-06 , 1.01                                     ***/
/***  .....                                                  ***/
/*************************************************************/
/*** RUN: Modtst7 [filename1[.csv] ... filename[.csv] ]      ***/
/*************************************************************/
#include <stdio.h>
#include <conio.h>
#include <string.h>
#include <math.h>
#define MAX_SAMPLES 5000
#define FCARR 125000    /* carrier frequency */
#define N_FSUB 32.0F    /* factor for data frequency */
                        /* e.g. 125000/32 = 3906.25  */
float  pi;   /* pi=3.14.... */

/* Array for time and sense coil voltage vd*/
float vtime[MAX_SAMPLES]; /* time array  */
float vd[MAX_SAMPLES];    /* Array for different coil voltage */

/*************************************************************/
/***    Read CSV File  Function                            ***/
/***                                                       ***/
/***    Description:                                       ***/
/***    This function reads the table of time and sense coil ***/
/***    voltage from a File in CSV Format                  ***/
/***                                                       ***/
/***    Input: filename                                    ***/
/***                                                       ***/
/***    Return: Number of samples  (sample Count)          ***/
/***            0  if an error occurred                    ***/
```

© ISO/IEC 2006 – All rights reserved

Copyright International Organization for Standardization
Provided by IHS under license with ISO
No reproduction or networking permitted without license from IHS
Not for Resale

```
/***                                                              ***/
/***    Displays Statistics:                                      ***/
/***                                                              ***/
/***    Filename, SampleCount, Sample rate, Max/Min Voltage       ***/
/*****************************************************************/

int readcsv(char* fname)
{
   float a,b;
   float max_vd,min_vd;
   int i;
   FILE     *sample_file;

   /************ Open File *********************************/
   if (!strchr(fname, '.'))   strcat(fname, ".csv");

   if ((sample_file = fopen(fname, "r")) == NULL)
      {
      printf("Cannot open input file %s.\n",fname);
      return 0;
      }
   /*****************************************************/
   /* Read CSV File                                     */
   /*****************************************************/
   max_vd=-1e-9F;
   min_vd=-max_vd;
   i=0;

   while (!feof(sample_file))
      {
      if (i>=MAX_SAMPLES)
      {
          printf("Warning: File truncated !!!\n");
          printf("To much samples in file %s\b\n",fname);
          break;
      }
      fscanf(sample_file,"%f,%f\n", &a, &b);
      vtime[i] = a;
      vd[i] = b;
      if (vd[i]>max_vd) max_vd=vd[i];
      if (vd[i]<min_vd) min_vd=vd[i];
      i++;
      }
   fclose(sample_file);

   /************ Displays Statistics  ***********************/
   printf("\n***********************************************\n");
   printf("\nStatistics: \n");
   printf(" Filename    : %s\n",fname);
   printf(" Sample count: %d\n",i);
   printf(" Sample rate : %1.0f kHz\n",1e-3/(vtime[1]-vtime[0]));
   printf(" Max(vd)     : %4.0f mV\n",max_vd*1000);
   printf(" Min(vd)     : %4.0f mV\n",min_vd*1000);

   return i;
}/*************** End ReadCsv **************/


/*****************************************************************/
/***    DFT : Discrete Fourier Transform                       ***/
/*****************************************************************/
/***    Description:                                           ***/
/***    This function calculate the Fourier coefficient        ***/
/***                                                           ***/
/***    Input: Number of samples                               ***/
/***    Global Variables:                                      ***/
/***                                                           ***/
/***    Displays Results:                                      ***/
/***                                                           ***/
```


© ISO/IEC 2006 – All rights reserved
Copyright International Organization for Standardization
Provided by IHS under license with ISO
No reproduction or networking permitted without license from IHS
Not for Resale

```
/***     Carrier coefficient                                    ***/
/***     Upper sideband coefficient                             ***/
/***     Lower sideband coefficient                             ***/
/***                                                            ***/
/*****************************************************************/

void dft(int count)
{
   float c0_real,c0_imag,c0_abs,c0_phase;
   float c1_real,c1_imag,c1_abs,c1_phase;
   float c2_real,c2_imag,c2_abs,c2_phase;
   int   N_data,center,start,end;
   float w0,wu,wl;

   int i;

   w0=(float)(FCARR*2.0)*pi;      /* carrier        */
   wu=(float)(1.0+1.0/N_FSUB)*w0; /* upper sideband */
   wl=(float)(1.0-1.0/N_FSUB)*w0; /* lower sideband */

   c0_real=0;  /* real part of the carrier fourier coefficient */
   c0_imag=0;  /* imag part of the carrier fourier coefficient */
   c1_real=0;  /* real part of the up. sideband fourier coefficient */
   c1_imag=0;  /* imag part of the up. sideband fourier coefficient */
   c2_real=0;  /* real part of the lo. sideband fourier coefficient */
   c2_imag=0;  /* imag part of the lo. sideband fourier coefficient */

   center=(count+1)/2; /*  center address */

   /********** signal selection  ******************************/

   /*   Number of samples for two subcarrier  periods  */

   N_data=(int)(0.5+2.0*N_FSUB/(vtime[2]-vtime[1])/FCARR);
          /* Note: (vtime[2]-vtime[1]) are the scope sample rate */

   start=center-(int)(N_data/2.0+0.5);
   end=start+N_data-1;

   /*******************    DFT *********************************/
   for( i=start;i<=end;i++)
      {
      c0_real=c0_real+vd[i]*(float)cos(w0*vtime[i]);
      c0_imag=c0_imag+vd[i]*(float)sin(w0*vtime[i]);
      c1_real=c1_real+vd[i]*(float)cos(wu*vtime[i]);
      c1_imag=c1_imag+vd[i]*(float)sin(wu*vtime[i]);
      c2_real=c2_real+vd[i]*(float)cos(wl*vtime[i]);
      c2_imag=c2_imag+vd[i]*(float)sin(wl*vtime[i]);
      }

   /*******************    DFT scale ***************************/
   c0_real=2.0F*c0_real/(float)(N_data);
   c0_imag=2.0F*c0_imag/(float)(N_data);
   c1_real=2.0F*c1_real/(float)(N_data);
   c1_imag=2.0F*c1_imag/(float)(N_data);
   c2_real=2.0F*c2_real/(float)(N_data);
   c2_imag=2.0F*c2_imag/(float)(N_data);

   /**************** absolute fourier coefficient     **********/
   c0_abs=(float)sqrt(c0_real*c0_real + c0_imag*c0_imag);
   c1_abs=(float)sqrt(c1_real*c1_real + c1_imag*c1_imag);
   c2_abs=(float)sqrt(c2_real*c2_real+c2_imag*c2_imag);

   /**************    Phase of fourier coefficient    **********/
   c0_phase=(float)atan2(c0_imag,c0_real);
   c1_phase=(float)atan2(c1_imag,c1_real);
   c2_phase=(float)atan2(c2_imag,c2_real);
```

--`,,```,,,,````-`-,,`,,`,`,,`---

© ISO/IEC 2006 – All rights reserved
Copyright International Organization for Standardization
Provided by IHS under license with ISO
No reproduction or networking permitted without license from IHS
Not for Resale

```
   /**************  Result Display    *************************/
   printf("\n\nResults: \n");

   printf("Carrier        ");
   printf("Abs: %7.3fmV  ",1000*c0_abs);
   printf("Phase: %3.0fdeg\n",c0_phase/pi*180);

   printf("Upper sideband ");
   printf("Abs: %7.3fmV  ",1000*c1_abs);
   printf("Phase: %3.0fdeg\n",c1_phase/pi*180);

   printf("Lower sideband ");
   printf("Abs: %7.3fmV  ",1000*c2_abs);
   printf("Phase: %3.0fdeg\n\n",c2_phase/pi*180);
   printf("\n*********************************************\n");
   return;
}/***************** End DFT **************/


/*************************************************************/
/***    MAIN  LOOP                                         ***/
/*************************************************************/
int main(unsigned short paramCount,char *paramList[])
{
   char fname[256];
   unsigned int  i,sample_count;
   pi = (float)atan(1)*4; /* calculate pi */

   printf("\n*********************************************\n");
   printf("\n****  tag Test-Program                      ****\n");
   printf("\n****  Version: 1.0     APR 2000             ****\n");
   printf("\n*********************************************\n");

   /************* No Input Parameter           *****************/
   if (paramCount==1)
      {
      printf("\nCSV File name :");
      scanf("%s",fname);
      if (!strchr(fname, '.'))   strcat(fname, ".csv");
      if (!(sample_count=readcsv(fname))) return;

      dft(sample_count);
      }
   else
      {
      /************* Input Parameter Loop     *****************/
      for (i=1;i<paramCount;i++)
         {
         strcpy(fname,paramList[i]);

         if (!strchr(fname, '.'))   strcat(fname, ".csv");
         if (!(sample_count=readcsv(fname))) break;
         dft(sample_count);
         }
      }
   return;
}/********************** End Main  *************************/
```


--`,,```,,,,````-`-`,,`,,`,`,,`---
© ISO/IEC 2006 – All rights reserved
Copyright International Organization for Standardization
Provided by IHS under license with ISO
No reproduction or networking permitted without license from IHS
Not for Resale

Bibliography

[1] ISO/IEC 11784, *Radio frequency identification of animals — Code structure*

[2] ISO/IEC 11785, *Radio frequency identification of animals — Technical concept*

[3] IEEE Std. 60488.1, *Higher performance protocol for the standard digital interface for programmable instrumentation — Part 1: General*

[4] IEEE Std. 60488.2, *Standard digital interface for programmable instrumentation — Part 2: Codes, formats, protocols and common commands*

[5] ISO/IEC 15962, *Information technology — Radio frequency identification (RFID) for item management — Data protocol: data encoding rules and logical memory functions*

[6] ISO/IEC 18000-1, *Information technology — Radio frequency identification for item management — Part 1: Reference architecture and definition of parameters to be standardized*

© ISO/IEC 2006 – All rights reserved

Copyright International Organization for Standardization
Provided by IHS under license with ISO
No reproduction or networking permitted without license from IHS
Not for Resale

ICS 35.040

Price based on 29 pages

© ISO/IEC 2006 – All rights reserved
Copyright International Organization for Standardization
Provided by IHS under license with ISO
No reproduction or networking permitted without license from IHS
Not for Resale