TECHNICAL REPORT

ISO/IEC TR 15067-3

First edition
2000-10

Information technology – Home Electronic System (HES) application model –

Part 3: Model of an energy management system for HES



Reference number
ISO/IEC TR 15067-3:2000(E)

--`,,```,,,,````-`-`,,`,,`,`,,`---

Copyright International Organization for Standardization
Provided by IHS under license with ISO
No reproduction or networking permitted without license from IHS

Not for Resale

Copyright International Organization for Standardization
Provided by IHS under license with ISO
No reproduction or networking permitted without license from IHS
Not for Resale

TECHNICAL REPORT – TYPE 3

ISO/IEC TR 15067-3

First edition
2000-10

Information technology – Home Electronic System (HES) application model –

Part 3: Model of an energy management system for HES

© ISO/IEC 2000

All rights reserved. Unless otherwise specified, no part of this publication may be reproduced or utilized in any form or by any means, electronic or mechanical, including photocopying and microfilm, without permission in writing from the publisher.

ISO/IEC Copyright Office • Case postale 56 • CH-1211 Genève 20 • Switzerland



PRICE CODE L

For price, see current catalogue

Copyright International Organization for Standardization
Provided by IHS under license with ISO
No reproduction or networking permitted without license from IHS

Not for Resale

CONTENTS

Page

FOREWORD 4
INTRODUCTION 5
Clause
1 Scope 6
2 References 6
3 Abbreviations 6
4 The Evolution of energy management 6
5 Load control 7
5.1 Responding to pricing 7
5.2 Local control 7
5.3 Direct control 7
5.4 Distributed control 8
6 Value-added services 9
7 The utility gateway 10
8 The HES energy management model 11
8.1 Logical and physical models 11
8.2 Energy management use cases 13
8.2.1 Structure of use cases 13
8.2.2 Case 1: Local control 13
8.2.3 Case 2: Direct control 14
8.2.4 Case 3: Direct control with supervision 15
8.2.5 Case 4: Distributed control 16
8.2.6 Case 5: Advanced distributed control 17
8.3 Case 6: Distributed control for intelligent appliances 18
8.3.1 Case 7: Utility telemetry services 19
8.4 HES messages for energy management 20
8.4.1 HES messages overview 20
8.4.2 HES message list 20
9 Suggestions for the HES application language 23

Figure 1 – A Distributed load control example 9
Figure 2 – EPRI Customer communications gateway 10
Figure 3 – Physical HES energy management model 11
Figure 4 – Logical model for HES energy management 11
Figure 5 – Logical model of minimal HES energy management 12
Figure 6 – Case 1: Physical model 13
Figure 7 – Case 1: Logical model 13
Figure 8 – Case 2: Physical model 14
Figure 9 – Case 2: Logical model 14
Figure 10 – Case 3: Physical model 15

Copyright International Organization for Standardization
Provided by IHS under license with ISO
No reproduction or networking permitted without license from IHS Not for Resale

Figure 11 – Case 3: Logical model 15
Figure 12 – Energy management controller parameters..... 16
Figure 13 – Case 7: Physical model 19
Figure 14 – Case 7: Logical model 19

Copyright International Organization for Standardization
Provided by IHS under license with ISO
No reproduction or networking permitted without license from IHS Not for Resale

INFORMATION TECHNOLOGY – HOME ELECTRONIC SYSTEM (HES) APPLICATION MODEL –

Part 3: Model of an energy management system for HES

FOREWORD

1) ISO (International Organization for Standardization) and IEC (International Electrotechnical Commission) form the specialized system for worldwide standardization. National bodies that are members of ISO or IEC participate in the development of International Standards through technical committees established by the respective organization to deal with particular fields of technical activity. ISO and IEC technical committees collaborate in fields of mutual interest. Other international organizations, governmental and non-governmental, in liaison with ISO and IEC, also take part in the work.
2) In the field of information technology, ISO and IEC have established a joint technical committee, ISO/IEC JTC 1. Draft International Standards adopted by the joint technical committee are circulated to national bodies for voting. Publication as an International Standard requires approval by at least 75 % of the national bodies casting a vote.
3) Attention is drawn to the possibility that some of the elements of this Technical Report may be the subject of patent rights. ISO and IEC shall not be held responsible for identifying any or all such patent rights.

The main task of IEC and ISO technical committees is to prepare International Standards. In exceptional circumstances, a technical committee may propose the publication of a technical report of one of the following types:

- type 1, when the required support cannot be obtained for the publication of an International Standard, despite repeated efforts;
- type 2, when the subject is still under technical development or where, for any other reason, there is the future but not immediate possibility of an agreement on an International Standard;
- type 3, when the technical committee has collected data of a different kind from that which is normally published as an International Standard, for example ‘state of the art’.

Technical reports of types 1 and 2 are subject to review within three years of publication to decide whether they can be transformed into International Standards. Technical reports of type 3 do not necessarily have to be reviewed until the data they provide are considered to be no longer valid or useful.

ISO/IEC 15067-3, which is a technical report of type 3, was prepared by subcommittee 25: Interconnection of information technology equipment, of ISO/IEC joint technical committee 1: Information technology.

This publication was drafted in accordance with ISO/IEC directives, Part 3.

This document is not to be regarded as an International Standard. Comments on the content of this document should be sent to IEC Central Office.

ISO/IEC 15067 currently consists of four parts:

Part 1: Application services and protocol (under consideraton)

Part 2: Lighting model for HES

Part 3: Model of an energy management system for HES

Part 4: Model of a security system for HES (under consideration)

--`,,```,,,,````-`-`,,`,,`,`,,`---
Copyright International Organization for Standardization
Provided by IHS under license with ISO
No reproduction or networking permitted without license from IHS Not for Resale

INTRODUCTION

This model of an energy management system for residences extends the set of HES (Home Electronic System) application models. Models for lighting and security have already been developed and accepted. These models should facilitate the validation of the language specified for HES in ISO/IEC 15067-1.

These models have been developed to foster interoperability among products from competing or complementary manufacturers. Product interoperability is essential when using home control standards, such as HES. This document defines a typical security system and describes the communications services needed. A high-level model for an energy management system using HES is presented.

ISO and IEC would appreciate comments by developers of energy management systems regarding possible enhancements to this model.

--`,,```,,,,````-`-`,,`,,`,`,,`---

Copyright International Organization for Standardization
Provided by IHS under license with ISO
No reproduction or networking permitted without license from IHS Not for Resale

INFORMATION TECHNOLOGY – HOME ELECTRONIC SYSTEM (HES) APPLICATION MODEL –

Part 3: Model of an energy management system for HES

1 Scope

The model for energy management presented in this Technical Report is generic and representative of a wide range of situations. Since one model cannot be completely comprehensive other models or operating modes may be more appropriate for certain applications.

This model for energy management accommodates a range of load control strategies. Examples of implementations that could be described with this model include:

– the CELECT Intelligent Load Management System in the United Kingdom. The utility transmits electricity cost data and forecasted outdoor air temperatures to residential heater controllers;

– the “bleu, blanc, rouge” technique used by Electricité de France to announce price tiers one day in advance. The tier signal is displayed using a blue, white or red light to alert the customer;

– real-time pricing experiments by Consolidated Edison of New York and by Pacific Gas and Electric, both in the United States.

2 Reference documents

ISO/IEC 15067-1: *Information technology – Home Electronic System (HES) Application Model – Part 1: Application Services and Protocol* (under consideration)

3 Abbreviations

DSM Demand-Side Management

EPRI Electric Power Research Institute (Palo Alto, California, U.S.A.)

4 Evolution of energy management

Electricity consumption patterns have high peaks. During weather extremes of heat and cold the demand for electricity rises sharply. In the United States the average rate of power generation is only about 46 % of the peak generation that occurs during these situations. Ideally, the utilities would like to maintain the supply of electricity sufficiently high to meet any demand. This has been achieved in some regions of developed countries. However, this is becoming less practical because of public pressure and government rules. Therefore, utilities have developed many methods of Demand-Side Management (DSM) for influencing the demand to match the available supply.

DSM tools enable utilities to modify the cumulative demand for energy, known as the load shape when plotted over a one-day interval. Utilities have developed a variety of DSM programs to manipulate the load shape. Different programs have different load shape goals, with the majority intended for peak clipping.

Copyright International Organization for Standardization
Provided by IHS under license with ISO
No reproduction or networking permitted without license from IHS Not for Resale

DSM programs initially focused on providing incentives for using electricity more efficiently. Customer cooperation may be obtained by offering a financial incentive, such as an up-front rebate, a loan guarantee, a lower rate for electricity, or free energy efficient planning and evaluation services. Some programs offer rebates for switching from tungsten to fluorescent lights, for adding building insulation, and for purchasing energy efficient appliances.

Utilities have developed more deterministic methods for influencing the demand through load control. The more innovative methods of load control depend on market forces for exerting control by varying the price of electricity. In the United States, almost 20 million customers out of a total of 130 million participate in some DSM program. About 30 % of these programs are load control.

5 Load control

5.1 Responding to pricing

In North America electricity traditionally has been sold at a flat rate or a volume-sensitive rate. New pricing schemes are adding time as a factor. Time-of-use rates vary the price according to the time of day. Typically, on-peak and off-peak rates are announced. The hours for each rate are fixed for each day, or at least for work days, similar to telephone rates. Rates that change dynamically with one-day or even no advance notice constitute real-time pricing.

Most load control programs by utilities have been limited to local control and direct control. However, the most innovative load control uses a combination called distributed control. These varieties of DSM help users respond effectively to utility price variations.

5.2 Local control

The utility publishes an electricity tariff that has between two and four different rates depending on the time of day. Customers with time-of-use pricing for electricity are encouraged to operate heavy power consuming appliances at off peak pricing times. In order to maximize the savings, the customer must know the rates, know the power requirements of the appliance, and know the cost of operating the appliance. Then the customer can decide if it is convenient to defer the operation or spend the money during the peak cost time.

A few utilities have instituted a tariff that discourages a peak load. The consumer pays a special charge called a demand charge if the total electricity consumed during a short interval (typically 15 or 30 min) exceeds a preset limit.

Control equipment in the house can assist in determining when to operate some appliances. For example, a programmable thermostat could lower the temperature setting for a furnace during a period of higher priced electricity. If the consumer is subject to demand charges, special equipment could measure the power drawn, and cut off selected appliances, such as an air conditioner, as the demand limit is approached.

5.3 Direct control

Whereas local control depends entirely on voluntary cooperation by customers, direct control forces a shift in the customer demand for electricity. When direct control is activated at times of peak consumption, the utility interrupts the operation of appliances, such as the water heater and air conditioner. This requires prior arrangements with customers for permission and equipment installation. Many customers in the U.S. are offered rebates of up to $ 10 a month for participating in direct load control. More than 90 % of load control programs in the U.S. are based on direct control.

Copyright International Organization for Standardization
Provided by IHS under license with ISO
No reproduction or networking permitted without license from IHS Not for Resale

The utility operates these switches by remote control. They may use signals sent over the power line, over a cable television channel, over the telephone line, or via radio waves. A typical pattern of control would occur during the peak usage on a very hot afternoon:

– the air conditioner is cycled off periodically for 15 min, then 15 min on. Half of the customers are on while the other half is off;
– the water heater is cycled off for two hours, then on for two hours.

5.4 Distributed control

Distributed control is a relatively new method of load control. It is a combination of local and direct control with much increased flexibility. The utility has the opportunity to change prices at will by following the wholesale market price of electricity to reflect actual utility costs.

Distributed control has the potential to satisfy both the utility and the consumer:

– the utility can price power to reflect costs and supply. Changes can occur quickly, as needed;
– the customer makes the fundamental choice of comfort and convenience of operating certain electric appliances versus the cost of electricity.

It should be noted that some countries do not presently permit residential users to be offered fully flexible real-time pricing. Utilities may be permitted tariffs with two or more price tiers to reflect their costs of energy generation and distribution. As these innovative pricing schemes lower the peak demand, utility costs are reduced.

Some utilities are capable of accurately forecasting the cost of energy in the near future, typically 24 hours in advance, and supplying this information to the residential consumer. Forecasted pricing enables the consumer, or an intelligent energy management system, to “draw forward” on consumption in anticipation of peak pricing. This may involve comparatively simple measures such as ensuring that heat storage devices, water heaters, and similar are fully charged when the peak price period starts. The supply of such forecast pricing enables peaks in demand to be smoothed both forward and backward in time, thereby reducing the impact of such measures on consumer comfort and convenience.

There are two important problems for effective use of the changing cost of power. First, the price data must be delivered to the customer in a timely fashion. Second, the customer must interpret the data and apply it to appliance operation. Since most customers do not understand electricity measures, such as kilowatthours, they are not likely to use this data correctly. Here is where home control technology can benefit the consumer and the utility.

Figure 1 shows a possible distributed load control residential implementation. Electricity price data are sent to all houses in real-time over a wide area network, such as radio, telephone, or cable television. An energy management controller in the house receives the electricity rate information via a home control communications network. The controller combines this information with stored data about appliance power requirements and customer information. The customer might enter preferences in some implementations for appliance operation and budget limitations for electricity expenditures. Having processed this information, the controller issues signals that are distributed over a home control network in the house to the relevant appliances.

Copyright International Organization for Standardization
Provided by IHS under license with ISO
No reproduction or networking permitted without license from IHS Not for Resale

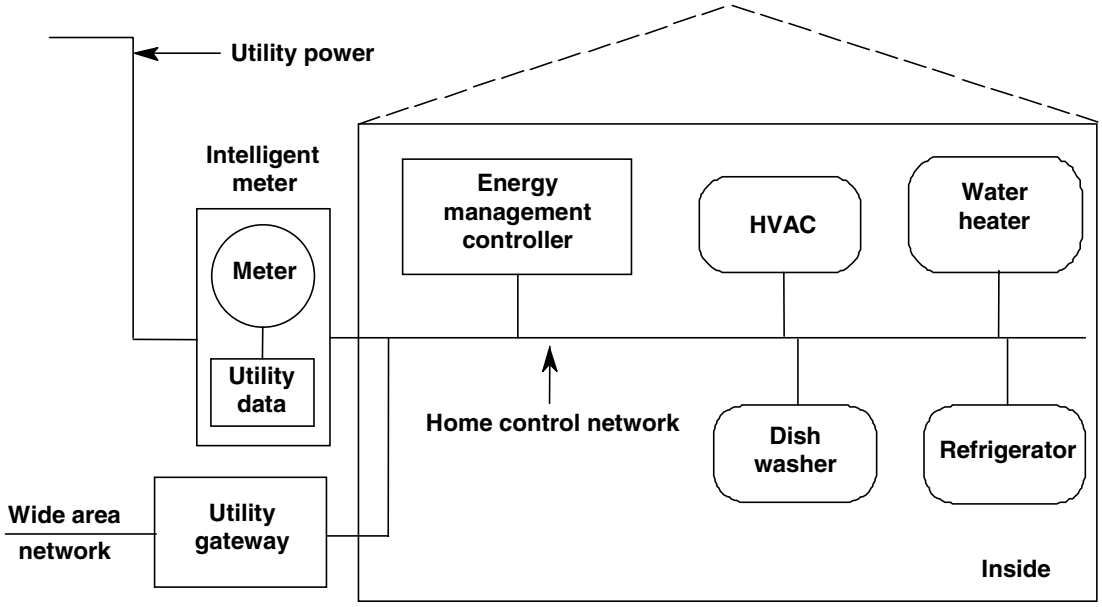

Figure 1 – A Distributed load control example

The energy management controller may not necessarily be a separate component. It could be combined with a security controller, an ISDN telephone decoder, or a cable television converter/decoder, or the functionality could be distributed among other components. Also, intelligent appliances may contain much or all of the functionality of an energy management controller. The location of energy management functions among a dedicated controller and appliances depends on the future market for appliances designed for integration with distributed control.

6 Value-added services

Communications between utilities and customers has been used on a very limited scale to implement load control for effective DSM. Typically, one-way communication is employed for switching customer loads. Utilities are now considering additional services that can be delivered using upgraded versions of these communications facilities. The objective is to retain customers with innovative services and to generate additional revenue with offering ancillary to power. Collectively, these are known as value-added services. Some governments have mandated that utilities, which traditionally were granted monopolies, start planning for competition. Therefore, utilities are seeking value-added services to make their products more attractive to customers.

Potential value-added services for electric utilities beyond load control are listed. The services preceded by a check-mark (✓) may be sold for additional revenue beyond the usual energy charges.

Automatic meter reading

✓ Offer bills with details about consumption by major appliances

Monitor power delivery

✓ Monitor power quality

✓ Offer load profiles

Control customer access when customers move or don't pay bills

Stagger power restoration in a neighborhood after a power failure

Copyright International Organization for Standardization
Provided by IHS under license with ISO
No reproduction or networking permitted without license from IHS Not for Resale

Detect tampering

✓ Diagnose appliances' problems and notify the customer

✓ Offer information and telemetry services

7 The utility gateway

Utilities use a variety of communications protocols for wide area network communications. These communication protocols are often different from the protocols used for home control. Communication gateways are required to link utility networks to home control networks when the protocols differ.

There is a multi-million dollar effort among some U.S. utilities to unify utility communications with a limited set of international standards. This project is the Utility Communications Architecture, sponsored by the Electric Power Research Institute [1)] (EPRI). This new protocol and existing utility protocols are different from home control protocols. Therefore, a communications gateway will be needed to link utility networks with home control networks for load control and value-added services data.

Utilities have many options for implementing and locating the customer gateway. EPRI has defined the Customer Communications Gateway for linking utility signals to customer equipment. This gateway is located near the electric meter at each house or building. As shown in Figure 2, it links the utility wide area network with a local area network in the house. It is designed to accommodate a variety of home control networks. Also, it provides a communications port for an electric meter. In some gateway designs the meter is accessible from both the utility and home networks.

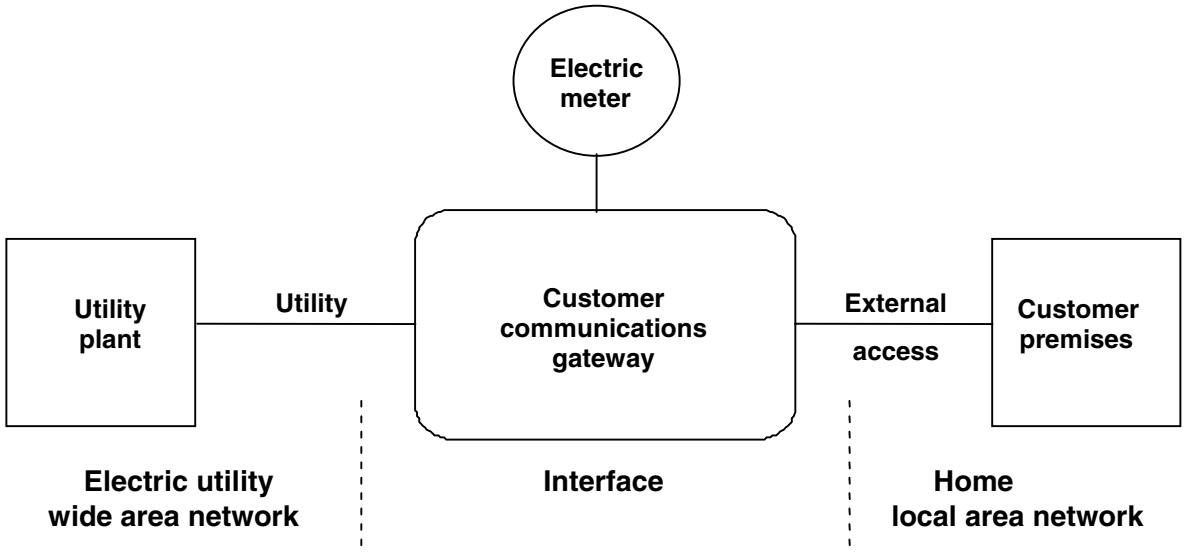

Figure 2 – EPRI Customer communications gateway

The gateway is responsible for converting the electrical signal from the wide area network format to that of the local area network. There may be differences in communications media, connectors, electrical waveforms, and timing. Data rate disparities on the two networks may require buffering and flow control in the gateway to avoid losing data. Also, the formats for commands and data are likely to be different and require translation.

---

1) Many investor-owned utilities support EPRI (Palo Alto, California). EPRI uses member utility funds to sponsor research projects. Utilities outside the United States may join EPRI as foreign affiliates.

Copyright International Organization for Standardization
Provided by IHS under license with ISO
No reproduction or networking permitted without license from IHS Not for Resale

8 The HES energy management model

8.1 Logical and physical models

The physical elements of the HES energy management model are shown in Figure 3. The components have been described in clauses 5 to 7. The logical relationship among these components is illustrated in Figure 4. To accommodate prevalent practices of direct control, a logical model with minimal functionality is proposed in Figure 5. In this case, the energy management controller has been eliminated because the utility controls the appliances by a direct signal. A user interface is included because some implementations allow the user to over-ride a direct load control signal. A cost penalty is usually assessed for over-rides.

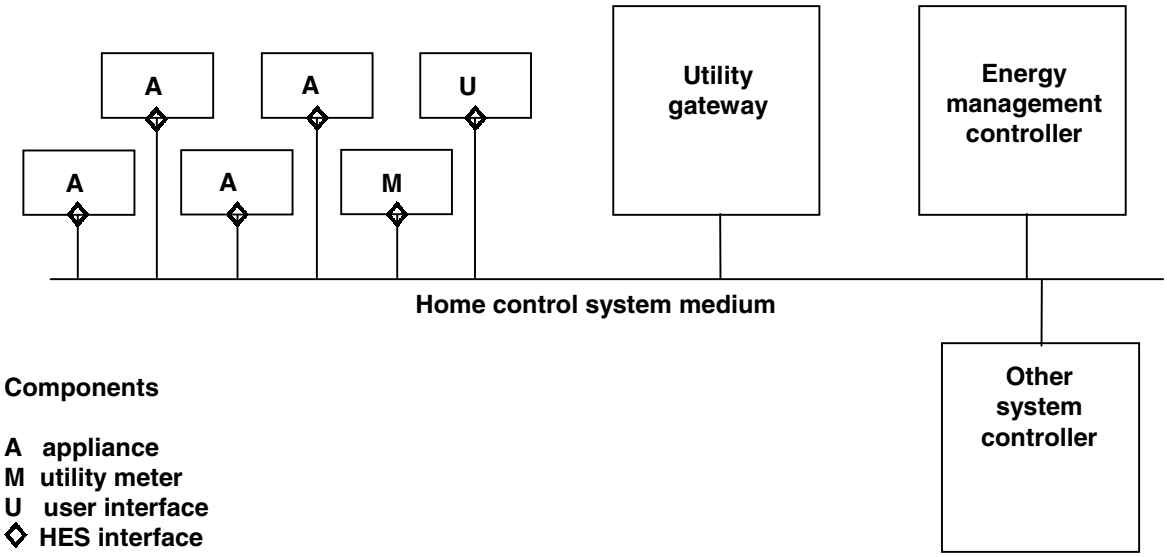

Figure 3 – Physical HES energy management model

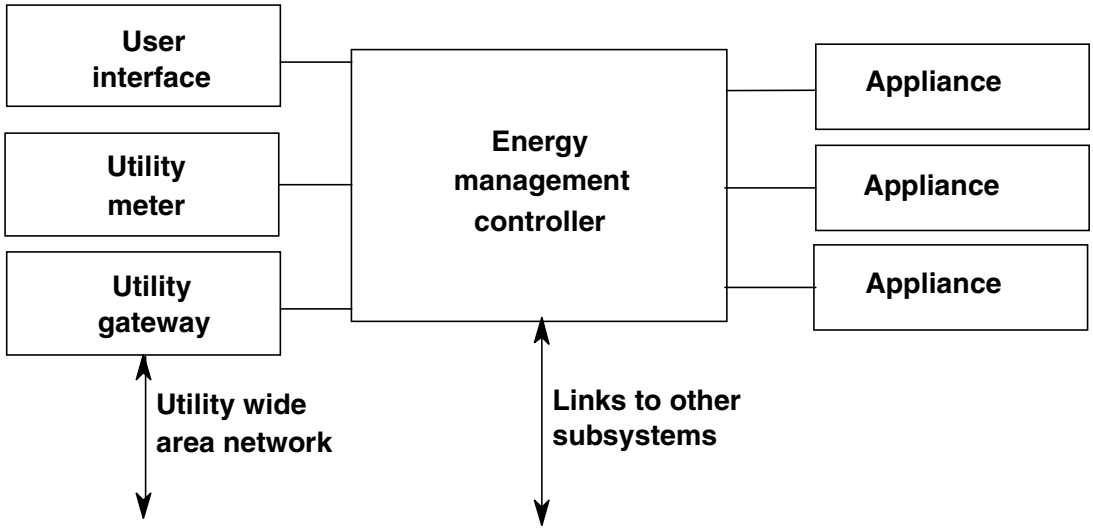

Copyright International Organization for Standardization
Provided by IHS under license with ISO
No reproduction or networking permitted without license from IHS
Not for Resale

Figure 4 – Logical model for HES energy management

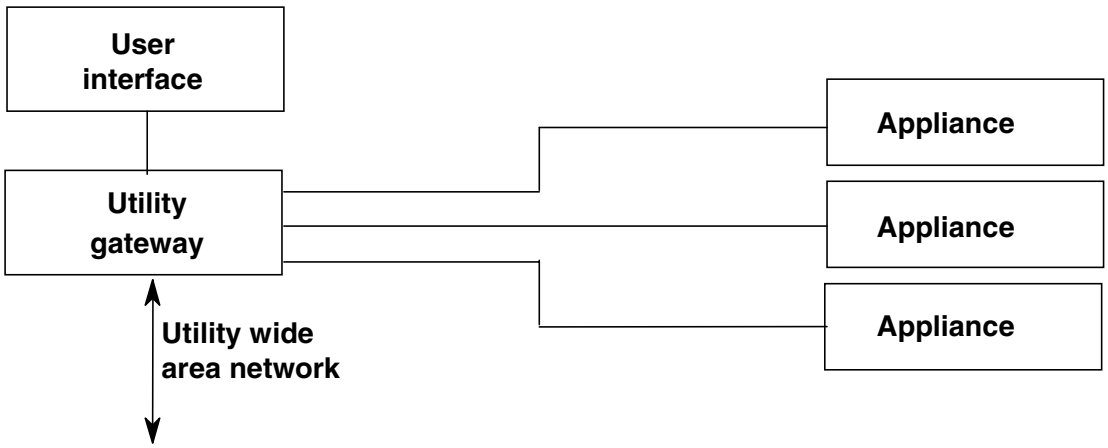

Figure 5 – Logical model of minimal HES energy management

Energy management is one of many subsystems possible in a home control network. As shown in Figure 4 the energy management controller may be linked to other home control systems or to a home control coordinator. The coordinator might be responsible for providing common scheduling and subsystem interaction. This coordination function may be distributed among the system controllers through sophisticated software, thereby eliminating the coordinating controller.

Copyright International Organization for Standardization
Provided by IHS under license with ISO
No reproduction or networking permitted without license from IHS Not for Resale

8.2 Energy management use cases

8.2.1 Structure of use cases

This clause shows examples of energy management applications. Each application is explained in words and illustrated with physical and logical models. These models are based on the components of the HES Energy Management Model. In the following cases, reference is made to power and kilowatts. With a change of terminology, these cases can apply to other utilities, such as gas, water, fuel oil, or heat flow (for district or central heating).

8.2.2 Case 1: Local control

See Figures 6 and 7.

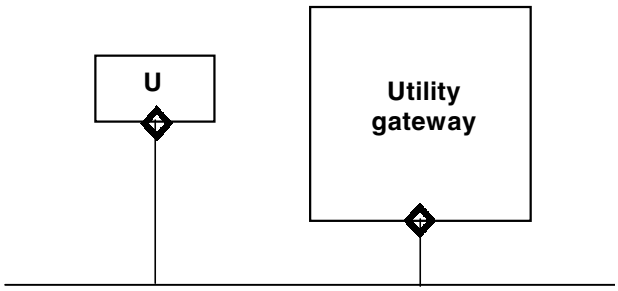

Components

U user interface
HES interface

Figure 6 – Case 1: Physical model

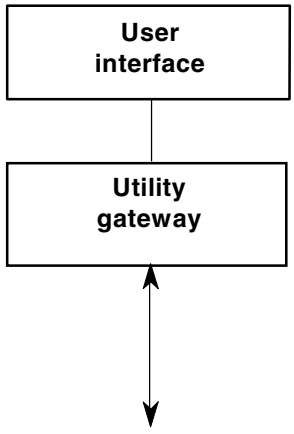

Figure 7 – Case 1: Logical model

Most local control schemes currently involve no communications to the customer. Typically, a static two tier rate is announced by the utility to customers. In more sophisticated local control the utility may establish:

– peak and off-peak rates that change with appropriate notice;

– times for peak and off-peak rates;

Copyright International Organization for Standardization
Provided by IHS under license with ISO
No reproduction or networking permitted without license from IHS Not for Resale

– multiple rate levels, such as time periods for low rates, medium rates, high rates, and emergency rates. The latter rate may be unusually high to indicate an emergency condition.

NOTE As the number of pricing tiers grows and the time of transition becomes variable, local control becomes similar to distributed control.

In all of these variations of local control, the possible communications between the utility and the customer consists of an indication of which price level is in effect. Therefore, signals flow from the utility via the gateway to a user interface. The user interface may consist of indicator lamps on a special unit with markings to indicate whether peak or off-peak or any intermediate rates are in effect.

8.2.3 Case 2: Direct control

See Figures 8 and 9.

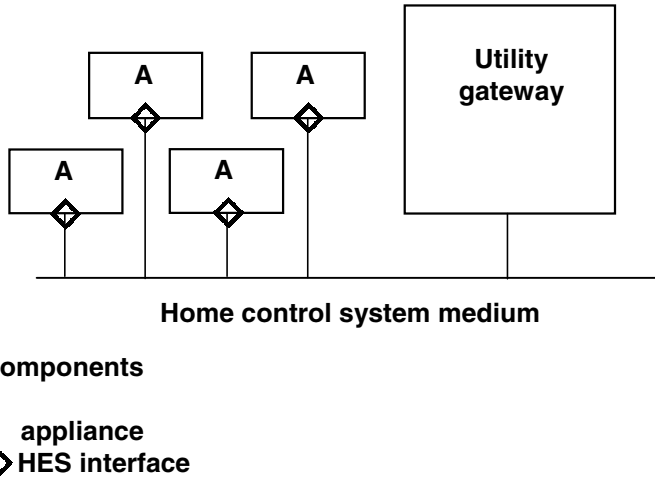

Figure 8 – Case 2: Physical model

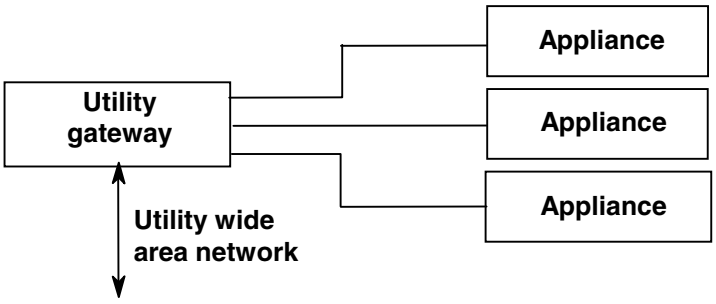

Figure 9 – Case 2: Logical model

The utility enables or disables the operation of specific appliances. This case is representative of present direct load control. Most present direct control consists of one-way communications from the utility to the customer appliances. The utility does not know if the control signal actually reached the appliance or if the appliance was operating.

The utility messages are usually limited to specifying which appliance is to be turned off or to be restored to operating status.

Copyright International Organization for Standardization
Provided by IHS under license with ISO
No reproduction or networking permitted without license from IHS Not for Resale

8.2.4 Case 3: Direct control with supervision

See Figures 10 and 11.

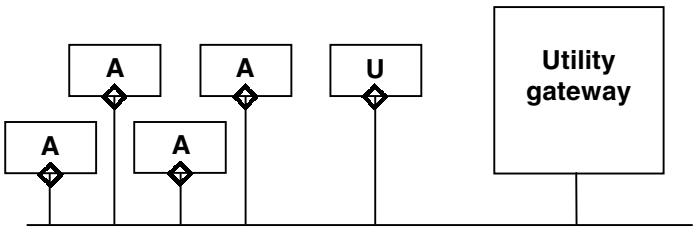

Components

A appliance
U user interface
◇ HES Interface

Figure 10 – Case 3: Physical model

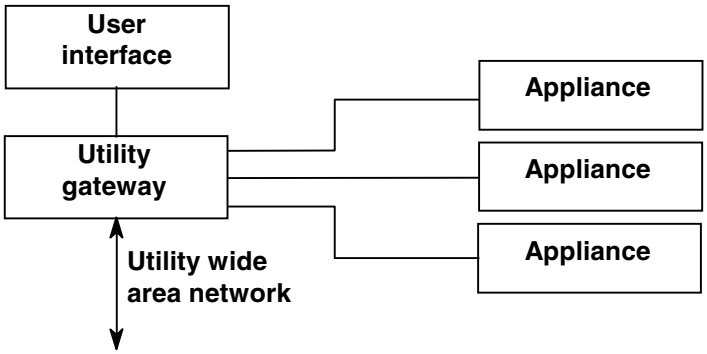

Figure 11 – Case 3: Logical model

Case 3 accommodates more advanced direct control with two-way communications. This case allows the utility to verify that specific appliances are responding to control. Also, the utility can determine the effectiveness of load shedding and, therefore, can detect free-riders. For these customers the controlled load never attempts to use energy during the controlled time period. Typically, these customers are not at home and the appliances are not operating during the controlled period.

Case 3 also allows the utility to institute control over the demand for power by setting a limit on kilowatts during a specified interval. The following expanded set of messages supports case 3.

8.2.4.1 Utility messages

– Which appliance will be controlled (turned-off) and for how long.

– For appliances that have multiple levels of power consumption, such as a heater, the utility may indicate the maximum level of operation allowed instead of sending a turn-off signal. This may consist of a specified reduction in the kilowatt demand of the appliance.

– When a specific appliance will be controlled and for how long.

Copyright International Organization for Standardization
Provided by IHS under license with ISO
No reproduction or networking permitted without license from IHS Not for Resale

– How often an appliance is likely to be controlled. Alternatively, the customer may be told when the next control time is likely after the present one being announced.

– The priority level of the control. This may indicate whether the customer has the option of over-riding the control.

– The approximate cost consequence if the customer over-rides the control. The customer is not expected to have an energy management controller. Appliance interaction is conducted by the utility via a sophisticated gateway. This gateway also controls any display device involved in direct load control.

8.2.4.2 Customer messages

– Static information about the controlled device: name and type of device, location of device, name of customer, typical power consumption, maximum power demand in an interval (typically 15 min, or must be specified), amount of power that can be shed by load control, maximum duty cycle (to indicate how often the device can be safely controlled).

– Historical information about the controlled device: Date and time the last control command was received and whether it was accepted (whether the customer allowed the device to be controlled), number of control commands and acceptances during a specified period, amount of load shed during the most recently accepted control command, average load shed during a specified period, reduction in power demand during a specified period.

– Device operating status: On, off, operating level (if appropriate), out-of-service, under direct load control.

– Customer acceptance or rejection of utility plans to control a specific appliance. A reason for rejecting direct load control may be provided: customer choice, life-safety device, device out of service, etc.

8.2.5 Case 4: Distributed control

The physical and logical arrangements contain all the elements in the generalized diagrams, see Figures 3 and 4. An energy management controller accesses real-time pricing data. This controller disables selected appliances to meet user's programmed goals of budget versus convenience. Figure 12 illustrates the signal flows into and out of the energy management controller. The utility pricing data may be provided in real-time indicating an immediate rate change. In a more realistic scenario, the utility broadcasts the rates one day in advance. These rates may change hour-by-hour.

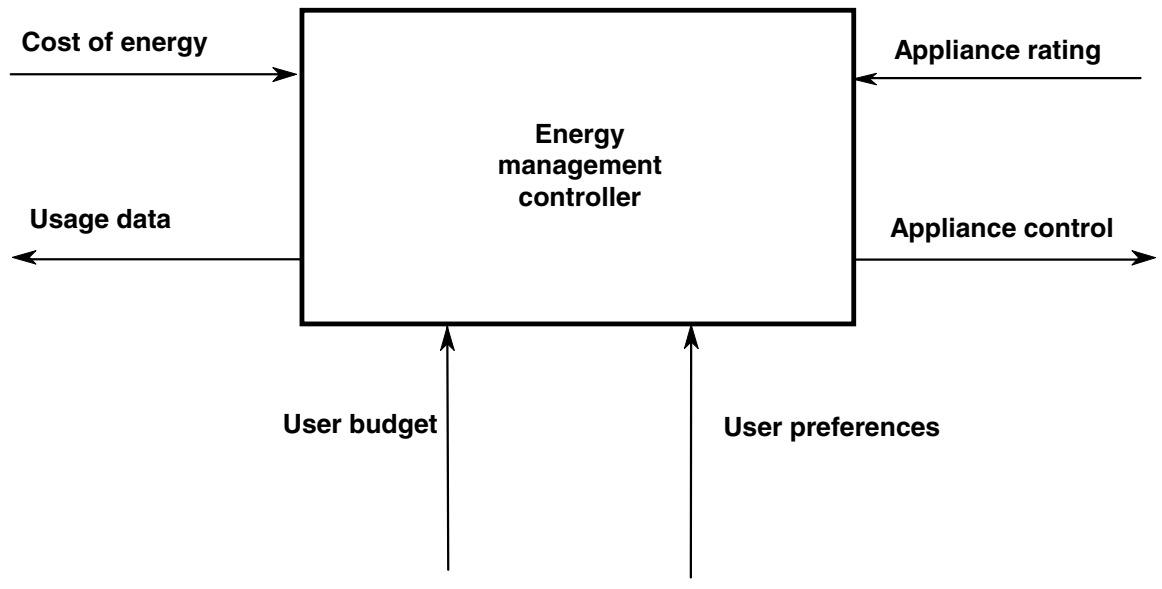

Figure 12 – Energy management controller parameters

Copyright International Organization for Standardization
Provided by IHS under license with ISO
No reproduction or networking permitted without license from IHS
Not for Resale

The energy management controller receives the electricity rate information from the utility gateway via a home automation communications network. The controller combines this information with stored data about appliance power requirements and customer information. The customer can enter preferences for appliance operation and budget limitations for electricity expenditures. For example, the customer may indicate a preference for hot water in the morning (for bathing) and heat in the early evening. Also, the customer might attempt to set a limit of monthly expenditures for energy. The energy management controller uses these inputs to allow or disallow appliance operation.

The software in the energy management controller determines which appliances to operate and when. Such software may be complex to balance economy with the user's desires for comfort and convenience. Elements of artificial intelligence are frequently required for effective operation.

The consumer benefits by attaining maximum convenience for appliance operation while controlling electricity costs. The consumer does not need to know details about time-of-use or demand-based electrical rates. The customer can over-ride the energy management controller and be informed of the cost impact. Thus, the consumer does not have to deal with technical issues but can take economic decisions.

8.2.6 Case 5: Advanced distributed control

The logical and physical arrangements contain all the elements in the generalized diagrams, Figures 3 and 4. Case 5 extends Case 4 with the additional ability of the energy management controller to monitor appliance operation and restrict the operating modes of selected appliances. Thus, the control signals to appliances are extended from on and off to operating mode or demand level (as appropriate for the appliance). Also, messages may flow from the appliance to the energy management controller.

The signals between the energy management controller and the appliance are similar to those defined for case 3, Direct control with Supervision. The fundamental difference is that all decisions about appliance control are made locally based on real-time price data. The energy management controller can calculate the cost consequences of appliance operation.

Appliances may include indicators and controls for energy management. For example, the energy management controller may determine that an appliance should not be operated. If the user attempts to run that appliance, a lamp on the appliance may indicate that this operation is deferred by the energy management controller. Furthermore, the user may be allowed to over-ride this decision by pressing a special key on the appliance. A display on the appliance or on a near-by home automation control panel may tell the user the cost consequences of over-riding the energy management controller. The user is now making an informed decision on spending money for energy.

The same set of messages between the energy management controller and appliances is required as defined in case 3. The following additional messages are needed.

– From the energy management controller:
  - data about the cost of operating the appliance in the operating mode requested by the user;
  - data suggesting operating modes and costs that will save money;
  - a request to reduce average kilowatt consumption by a stated percentage. Note that this command is intended for appliances with intelligent controls. Most appliances will not be able to respond to such a request. Most will be able either to operate normally or stop operating completely. Others may be able to operate in specified modes, as directed by the energy management controller.

Copyright International Organization for Standardization
Provided by IHS under license with ISO
No reproduction or networking permitted without license from IHS Not for Resale

– From appliances connected to the energy management controller:
  - confirmation of the mode of operation set by the user;
  - manual operation of the appliance by the user;
  - user request to over-ride control of the energy management controller;
  - power being consumed by the appliance. This information may be compiled for bill desegregation: a bill that shows how much power each major load is consuming. Also, the utility may request this data be uploaded for a load survey.

8.3 Case 6: Distributed control for intelligent appliances

The physical and logical arrangements contain all the elements in the generalized diagrams, see Figures 3 and 4. Additional energy services are possible with intelligent appliances. For example:

– Automatic adaptation to real-time pricing

  Some appliances might eventually be able to adapt energy consumption according to the price of electricity directly. This means that part of the algorithm planned for the energy management controller might be built into future appliances. The messages between the energy management controller and the appliance convey the current price and the anticipated duration of this price level.

  Intelligent appliance control has been implemented in the CELECT Intelligent Load Management System in the United Kingdom. The utility transmits electricity cost data and forecasted outdoor air temperatures to residential heater controllers that adjust the heater setting.

– Emergency load control

  The utility issues an emergency notice that supplies are limited and a specific level of power consumption must not be exceeded. The energy management controller could calculate the demands of all operating appliances to achieve this limitation. Zeltron has proposed[2)] a scheme for interleaving operating cycles among major appliances to limit the demand peak.

  An intelligent appliance might be able to control demand to a desired level automatically. The command sent to such an appliance would simply indicate the maximum energy consumption for a specified period of time.

  The utility commands to the energy management controller specify the maximum power availability and the time allowed to shed loads. The energy management controller must confirm acceptance of the power reduction within the specified time or the customer may be disconnected from the grid.

– Power consumption

  Some utilities gather power consumption statistics from major appliances for load planning purposes. Others offer these data to customers in a scheme called bill disaggregation. Bill disaggregation shows consumption by major appliance and thus encourages conservation. Such appliances must be outfitted with power meters. Current meters may be adequate if the appliances are primarily resistive loads.

  Commands to support power consumption consist of polling the appliances by the energy management controller. Each appliance returns the energy consumed since the last poll. Ancillary commands to initialize or reset power measurement in the appliance may be provided. The energy management controller may also communicate with the electric meter to gather whole-house consumption data.

  The utility may communicate with the energy management controller to request power recording and to upload data accumulated by the energy management controller. The controller would be responsible for gathering and averaging the data and producing a summary report.

---

2) Proposed by Zeltron at the 1993 Annual Symposium of the European Home Systems Association.

--`,,```,,,,````-`-`,,`,,`,`,,`---

Copyright International Organization for Standardization
Provided by IHS under license with ISO
No reproduction or networking permitted without license from IHS Not for Resale

8.3.1 Case 7: Utility telemetry services

See Figures 13 and 14.

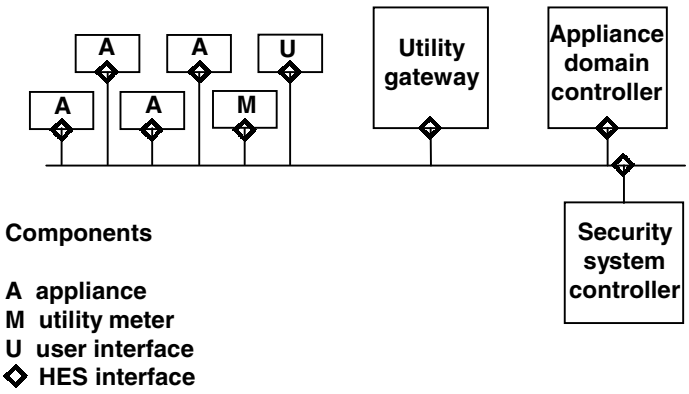

Figure 13 – Case 7: Physical model

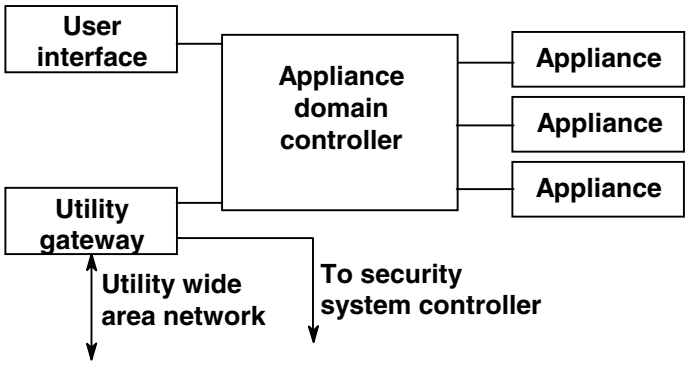

Figure 14 – Case 7: Logical model

This case accommodates a variety of new value-added services being considered by some utilities. It is not possible to anticipate all messages necessary to support services to be defined. Nevertheless, the pathways for such messages will likely be between a utility gateway and one or more local Application Domain Controllers[3)], similar to the energy management controller. The local controllers, shown in Figures 13 and 14 as an Appliance Domain Controller and a Security Controller, exchange messages with specific appliances or subsystems to be controlled. Please note that an explicit controller may not be present. In that

---

3) Application Domain – A logically related group of components that provide the functions of an application in a home or building. Typical components include sensors, actuators, user-interface devices, and controllers. Examples of Application Domains are lighting, security, energy management, and HVAC (heating, ventilating, and air-conditioning).

Application Domain Controller - A controller responsible for managing the operation of an Application Domain. An Application Domain Controller may be a physical device, or the application control functions may be distributed in related devices such as sensors, actuators, and appliances.

Copyright International Organization for Standardization
Provided by IHS under license with ISO
No reproduction or networking permitted without license from IHS Not for Resale

case, control functions are distributed among the network components comprising a Fully Distributed System.[4)]

An example of a utility telemetry service is appliance monitoring and diagnosis. A customer would subscribe to this service where the utility periodically tests the operation of a specific appliance. The utility initiates a built-in test sequence in the appliance and reads the result. Any problem requiring customer notification is presented on a local user interface.

Message sets to accommodate remote appliance diagnosis contain the test sequence identification code. The appliance responds with the result code of the test procedure. Future appliances might allow the utility to down-load special test sequences into the appliance or into the energy management controller. In the latter case, the controller is acting as a test instrument for the appliance.

An important factor is the quantity of data to be communicated between the utility and the customer. Since the control channel planned for HES is not intended for large volumes of data the increase of provided data must be considered as value added services, such as, for instance, remote testing. An information channel, defined in the HES architecture, needs to be allocated for this purpose.

8.4 HES messages for energy management

8.4.1 HES messages overview

The following messages are proposed for commands, status reports, or data to be exchanged among the logical components in the HES energy management system model. This message set does not imply that all energy management components can or must support the features of each message. Messages will be chosen to support a specific implementation. These messages represent a variety of functionality, not necessarily implemented in any one system.

These messages will be cast into HES syntax after the Working Party agrees on the energy management model and the message contents. This message set will be used as a basis for determining the suitability of the primitives in the document entitled HES Application Model and Services or changes necessary to this document.

8.4.2 HES message list

Each message may be sent to a single device, to all devices (broadcast), or to a predefined group of devices.

8.4.2.1 Gateway ←→ User interface

The user interface may consist of lamps indicating predefined price levels for energy. Alternatively, the user interface may display character data or graphical images sent by the utility via the gateway. An expanded character display would accommodate data about changes in the price tiers and applicable times.

– ON/OFF messages

  Turn on the addressed indicator lamp in the user interface.

  Turn off the addressed indicator lamp in the user interface.

– Messages about rate tiers, or unusual conditions

  A string of characters to be displayed on a suitable user interface. A string length of about 40 characters should be sufficient. For multiple line displays, multiple messages may be

---

[4)] Fully Distributed System – A system comprising multiple Application Domains where the functionality of Application Domain management is distributed over related devices. In such a system the presence of Application Domain Controllers as physical devices is optional.

Copyright International Organization for Standardization
Provided by IHS under license with ISO
No reproduction or networking permitted without license from IHS Not for Resale

sent. Future displays might support graphical (or icon) display, requiring appropriate coded messages in place of plain text.

– Cost of over-ride

This may be implemented using the method above for message display. The intent is to inform consumers of cost of over-riding a direct load control signal.

8.4.2.2 Gateway ←→ Appliances

– ON/OFF messages

Turn off the addressed appliance for a specified duration.

Turn on the addressed appliance.

(This message is sent either to the appliance or to a power module that controls the flow of power into the appliance. The specified duration parameter is optional.)

– Level of consumption

Limit the addressed appliance operation to a specified maximum kW for a specific duration.

Remove any kW restriction from the addressed appliance.

– Time of restriction

Notify the addressed appliance of the start time a specified restriction and the anticipated duration.

Notify the addressed appliance how often a specified restriction will be instituted.

Notify the addressed appliance about the start time of a specified restriction after the present restriction ends.

– Priority of restriction

Assign a priority level to the addressed appliance for future on/off or restriction messages.

(It is assumed there is prior agreement on the number and meaning of priority levels.)

– Appliance report

Request specified report from addressed appliance.

Provide requested report from addressed appliance to the gateway.

Specified reports include: static information, historical information, device operating status, customer acceptance or rejection of load control and the reason, if available. The contents of these reports are described in Case 3 above. The format of the reports consists of parameters identified by field position or by keyword.

8.4.2.3 Gateway ←→ Energy management controller

The following commands involve the exchange of data in character format.

– Rate data update

The Energy Management Controller queries the Gateway for the availability of new rate data.

The Gateway responds with the time and date of the last rate update.

– Rate data

The Energy Management Controller queries the Gateway for a down-load of rate data.

The Gateway down-loads the rate data. The format of the data is to be defined. It may follow the format used for wide area communications between the utility and the gateway[5)].

---

5) There is a project sponsored by the Electric Power Research Institute (EPRI) in the United States to define functional objects for conveying real-time price data. This is an activity of the MMS Forum. It is drawing upon related work by the Automatic Meter Reading Association and the IEEE (Institute of Electrical and Electronic Engineers).

Copyright International Organization for Standardization
Provided by IHS under license with ISO
No reproduction or networking permitted without license from IHS Not for Resale

8.4.2.4 Energy management controller ←→ Appliances

– Appliance capabilities

The Energy Management Controller queries an addressed appliance about device information and energy requirements.

An appliance responds to a query from the Energy Management Controller with static information (per case 3 above) including data about nominal energy consumption, and, if available, data about peak consumption, consumption by operating mode, and ability to reduce energy consumption upon request. The latter parameter may indicate that the appliance is in a critical mode that should not be interrupted, or involved with life safety operations.

– Appliance control

The Energy Management Controller requests the addressed appliance turn off or limit operating modes or limit power consumption to a specified level or percentage of peak usage within a specified time interval and with a specified urgency.

The Energy Management Controller requests the addressed appliance resume operating without any mode or power restriction.

The addressed appliance responds with acceptance and confirmation or rejection of the request from the Energy Management Controller or indicates it is turned off, out-of-service, or under manual control.

The Energy Management Controller informs an addressed appliance the cost of rejecting the previous request for energy consumption reduction.

The Energy Management Controller informs an addressed appliance about recommended operating modes with various degrees of conservation.

– Appliance energy consumption

The Energy Management Controller requests an addressed appliance report power consumption for the previous specified time interval.

The addressed appliance responds with the kW used or indicates it was off or out-of-service.

8.4.2.5 Energy management controller ←→ User interface

– User inputs

Numerical data providing a monthly energy budget.

Appliance operating preferences by appliance name, mode of operation, times of operation, and priority relative to other appliances.

– Displays for user

Numerical data about monthly energy consumption with optional bill disaggregation by major appliance.

Numerical data about the present and projected energy tariff.

In addition, a series of interactive menus are needed to configure the energy management system as appliances are added and deleted. A future network management computer may handle automatic configuration.

8.4.2.6 Energy management controller ←→ Meter

These commands apply to electronic meters with communications capabilities. It is possible in some installations that the meter functions as gateway. Therefore, commands defined for the gateway may be appropriate here.

Copyright International Organization for Standardization
Provided by IHS under license with ISO
No reproduction or networking permitted without license from IHS Not for Resale

– From Energy Management Controller

  Energy Management Controller requests consumption data from the meter for a specified period and peak usage (the demand), if available. Additional parameters may be requested depending on the meter functionality[6)].

– To Energy Management Controller

  The meter responds with consumption data, demand data, and applicable time period. Additional data may be returned depending on meter capabilities and requests from the Energy Management Controller.

8.4.2.7 Energy management controller ←→ Other controllers

Controllers may communicate messages for coordination or to announce unusual conditions requiring action by the other controllers. For example, the Energy Management Controller might request an HVAC unit to reduce energy consumption. If the home automation network includes an HVAC applications controller, the Energy Management Controller message might be sent to the HVAC controller rather than to the appliance. This routing would be appropriate if the HVAC controller contains algorithms for managing the operating characteristics of the HVAC equipment.

9 Suggestions for the HES application language

One the of the purposes of creating this application model is to validate the proposed HES Application Language. Following are language features desirable to support the messages described in the previous section:

– Messages with multiple parameters

  Many of the commands affect multiple parameters in the destination. If the HES language supports unitary primitives only, some compound messages will need to be decomposed into multiple commands. This will require more communications time and network resources. Although transmission throughput (on the order of milliseconds) is not critical in general for energy management, associating multiple primitives with one remote action may be cumbersome. Therefore, support of reads and writes to multiple objects is recommended. Alternatively, reads and writes to single primitives with concatenation and logical association should be supported.

– Messages with long data fields

  Transmission of real-time pricing tariffs or electronic meter data may involve considerable data[7)]. Either long data fields must be supported or messages must refer to related data sent over information channels. In this case, commands to manage information channels must be defined.

– Network configuration

  An energy management system must accommodate the addition and removal of appliances. Network management commands will be needed to achieve the often-stated goal to support plug-and-play appliances. These appliances automatically announce when they are first connected to a home control network, describe their functional capabilities to a responsible applications controller, and are logically linked to other appliances to which they need to communicate.

---

6) In the United States, the Automatic Meter Reading Association is specifying a standard set of tables with parameters that define meter capabilities. A meter manufacturer will choose a subset of features to incorporate in a particular meter model. The first table in a meter identifies which features are available in that meter and they will be defined in subsequent tables.

7) As noted, the Automatic Meter Reading Association is defining meter characteristics and operating parameters in tabular format. The data are organized into hundreds of tables.

Copyright International Organization for Standardization
Provided by IHS under license with ISO
No reproduction or networking permitted without license from IHS Not for Resale

Copyright International Organization for Standardization
Provided by IHS under license with ISO
No reproduction or networking permitted without license from IHS
Not for Resale

Standards Survey

The IEC would like to offer you the best quality standards possible. To make sure that we continue to meet your needs, your feedback is essential. Would you please take a minute to answer the questions overleaf and fax them to us at +41 22 919 03 00 or mail them to the address below. Thank you!

Customer Service Centre (CSC)

International Electrotechnical Commission
3, rue de Varembé
1211 Genève 20
Switzerland

or

Fax to: **IEC**/CSC at +41 22 919 03 00

Thank you for your contribution to the standards-making process.

Nicht frankieren
Ne pas affranchir

Non affrancare
No stamp required

A Prioritaire

RÉPONSE PAYÉE

SUISSE

Customer Service Centre (CSC)
International Electrotechnical Commission
3, rue de Varembé
1211 GENEVA 20
Switzerland

--`,,```,,,,````-`-`,,`,,`,`,,`---
Copyright International Organization for Standardization
Provided by IHS under license with ISO
No reproduction or networking permitted without license from IHS
Not for Resale

Q1 Please report on **ONE STANDARD** and **ONE STANDARD ONLY**. Enter the exact number of the standard: *(e.g. 60601-1-1)*

.....

Q2 Please tell us in what capacity(ies) you bought the standard *(tick all that apply).* I am the/a:

purchasing agent ❑
librarian ❑
researcher ❑
design engineer ❑
safety engineer ❑
testing engineer ❑
marketing specialist ❑
other.....

Q3 I work for/in/as a: *(tick all that apply)*

manufacturing ❑
consultant ❑
government ❑
test/certification facility ❑
public utility ❑
education ❑
military ❑
other.....

Q4 This standard will be used for: *(tick all that apply)*

general reference ❑
product research ❑
product design/development ❑
specifications ❑
tenders ❑
quality assessment ❑
certification ❑
technical documentation ❑
thesis ❑
manufacturing ❑
other.....

Q5 This standard meets my needs: *(tick one)*

not at all ❑
nearly ❑
fairly well ❑
exactly ❑

Q6 If you ticked NOT AT ALL in Question 5 the reason is: *(tick all that apply)*

standard is out of date ❑
standard is incomplete ❑
standard is too academic ❑
standard is too superficial ❑
title is misleading ❑
I made the wrong choice ❑
other .....

Q7 Please assess the standard in the following categories, using the numbers:
(1) unacceptable,
(2) below average,
(3) average,
(4) above average,
(5) exceptional,
(6) not applicable

timeliness.....
quality of writing.....
technical contents.....
logic of arrangement of contents .....
tables, charts, graphs, figures.....
other .....

Q8 I read/use the: *(tick one)*

French text only ❑
English text only ❑
both English and French texts ❑

Q9 Please share any comment on any aspect of the IEC that you would like us to know:

.....
.....
.....
.....
.....
.....
.....
.....
.....
.....
.....
.....

--`,,```,,,,````-`-`,,`,,`,`,,`---

Copyright International Organization for Standardization
Provided by IHS under license with ISO
No reproduction or networking permitted without license from IHS

Not for Resale

Copyright International Organization for Standardization
Provided by IHS under license with ISO
No reproduction or networking permitted without license from IHS
Not for Resale

ISBN 2-8318-5534-9



ICS 35.100.05

Typeset and printed by the IEC Central Office
GENEVA, SWITZERLAND

--`,,```,,,,````-`-`,,`,,`,`,,`---

Copyright International Organization for Standardization
Provided by IHS under license with ISO
No reproduction or networking permitted without license from IHS

Not for Resale