TECHNICAL REPORT

ISO/IEC TR 15067-2

First edition
1997-08-01

Information technology — Home Electronic Systems (HES) application model —

Part 2:
Lighting model for HES

Technologies de l'information — Modèle d'application des systèmes électroniques domestiques (HES) —

Partie 2: Modèle d'éclairage pour HES

Reference number
ISO/IEC TR 15067-2:1997(E)

Copyright International Organization for Standardization
Provided by IHS under license with ISO
No reproduction or networking permitted without license from IHS

Not for Resale

Contents

1 Scope **1**

2 Physical Lighting Model **1**
2.1 Physical components of a lighting system 1
2.1.1 Fixture 1
2.1.2 Switch 1
2.1.3 Dimmer 2
2.1.4 Sensor 2
2.1.5 Device concentrator 2
2.1.6 User interface 2
2.1.7 User interface concentrator 2
2.1.8 Lighting system controller 2
2.2 Physical architecture 3

3 Logical Lighting Model **3**
3.1 Logical architecture 3
3.2 Logical elements 3
3.2.1 Simple HES lighting system 3
3.2.2 Complex HES lighting system 3
3.2.3 Hierarchical lighting system 4
3.2.4 Distributed lighting system control 4

4 Lighting Use Cases **4**
4.1 Case 1: Figures 6 and 7 4
4.2 Case 2: Figures 8 and 9 4
4.3 Case 3: Figures 10 and 11 5
4.4 Case 4: Figures 12 and 13 5
4.5 Case 5: Figures 14 and 15 5

5 HES Messages for Lighting **5**
5.1 HES messages overview 5
5.2 HES message list 5
5.2.1 Activator — Illuminator 5
5.2.2 Activator — User interface 6
5.2.3 Coordinator — Activator 7
5.2.4 Activator, Coordinator — Other controllers 7

© ISO/IEC 1997

All rights reserved. Unless otherwise specified, no part of this publication may be reproduced or utilized in any form or by any means, electronic or mechanical, including photocopying and microfilm, without permission in writing from the publisher.

ISO/IEC Copyright Office • Case postale 56 • CH-1211 Genève 20 • Switzerland

Printed in Switzerland

Copyright International Organization for Standardization
Provided by IHS under license with ISO
No reproduction or networking permitted without license from IHS
Not for Resale

Foreword

ISO (the International Organization for Standardization) and IEC (the International Electrotechnical Commission) form the specialized system for worldwide standardization. National bodies that are members of ISO or IEC participate in the development of International Standards through technical committees established by the respective organization to deal with particular fields of technical activity. ISO and IEC technical committees collaborate in fields of mutual interest. Other international organizations, governmental and non-governmental, in liaison with ISO and IEC, also take part in the work.

In the field of information technology, ISO and IEC have established a joint technical committee, ISO/IEC JTC 1.

The main task of technical committees is to prepare International Standards, but in exceptional circumstances a technical committee may propose the publication of a Technical Report of one of the following types:

— type 1, when the required support cannot be obtained for the publication of an International Standard, despite repeated efforts;

— type 2, when the subject is still under technical development or where for any other reason there is the future but not immediate possibility of an agreement on an International Standard;

— type 3, when a technical committee has collected data of a different kind from that which is normally published as an International Standard ("state of the art", for example).

Technical Reports of types 1 and 2 are subject to review within three years of publication, to decide whether they can be transformed into International Standards. Technical Reports of type 3 do not necessarily have to be reviewed until the data they provide are considered to be no longer valid or useful.

ISO/IEC TR 15067-2, which is a Technical Report of type 3, was prepared by Joint Technical Committee ISO/IEC JTC 1, *Information technology*.

ISO/IEC TR 15067 consists of the following part, under the general title *Information technology — Home Electronic Systems (HES) application model*.

— *Part 2: Lighting model for HES*

Copyright International Organization for Standardization
Provided by IHS under license with ISO
No reproduction or networking permitted without license from IHS
Not for Resale

Introduction

The *Home Electronic System* is a standard under development by Working Group 1 (WG1) of Subcommittee 25 (SC25), *Interconnection of Information Technology Equipment*, under Joint Technical Committee 1 (JTC1) of the ISO and IEC.

The physical elements constituting lighting control systems are listed. The physical connection of these elements on a home control system medium is shown. Then, a generic logical model is presented. The relationship of this model to typical systems of varying complexity is discussed.

--`,,```,,,,````-`-`,,`,,`,`,,`---

Copyright International Organization for Standardization
Provided by IHS under license with ISO
No reproduction or networking permitted without license from IHS Not for Resale

Information technology — Home Electronic Systems (HES) application model —

Part 2:
Lighting model for HES

1 Scope

This part of ISO/IEC TR 15067 forms the basis for defining HES messages that flow among the logical components. A preliminary specification for the message set is provided.

2 Physical Lighting Model

2.1 Physical components of a lighting system

2.1.1 Fixture

- Contains one or more lamps.
- May include a microprocessor to store algorithms for lamp operation. Lamp parameters that may be controlled include on/off, light level, light color, focus, aperture, position in space and orientation, and timing parameters for changes of state.
- May contain an HES interface. If more than one HES interface is present, each interface and associated lamp(s) are treated as a separate logical unit in the HES Lighting Model.
- If a fixture does not contain an HES interface, it must be connected to a device concentrator. More than one fixture may be mounted in one physical box. Each HES interface and associated fixture(s) are treated as a logical unit. If the fixture(s) is (are) connected to a device concentrator containing an HES interface, that concentrator and all associated fixtures are treated as one logical unit in the HES Lighting Model. This logical unit may be modeled as containing multiple objects.

2.1.2 Switch

- A primitive user interface to control fixtures (individually or grouped) or to select scenes (called *lighting moments* in theater terminology). Optionally, a switch may include a visible indicator of the state of the fixtures being controlled.
- May contain an HES interface. If a switch does not contain an HES interface, it must be connected to a device concentrator. More than one switch may be mounted in one physical box. Each HES interface and associated switch(es) are treated as a logical unit. If the switch(es) are connected to a device concentrator containing an HES interface, that concentrator and all associated switches are treated as one logical unit in the HES Lighting Model. This logical unit may be modeled as containing multiple objects.

Copyright International Organization for Standardization
Provided by IHS under license with ISO
No reproduction or networking permitted without license from IHS Not for Resale

2.1.3 Dimmer

- A simple user interface. It may include a simple controller, and may be combined with a switch. It may contain power modulation circuitry. Optionally, a dimmer may include a visible indicator of the state of the fixtures being controlled.
- May contain an HES interface. If a dimmer does not contain an HES interface, it must be connected to a device concentrator. More than one dimmer may be mounted in one physical box. Each HES interface and associated dimmer(s) are treated as a logical unit. If the dimmer(s) are connected to a device concentrator containing an HES interface, that concentrator and all associated dimmers are treated as one logical unit in the HES Lighting Model. This logical unit may be modeled as containing multiple objects.

2.1.4 Sensor

- Measures external parameters, conditions and digitizes the measurement, and transmits the data. Examples include room occupancy and lighting intensity in the room or externally.
- May contain an HES interface. If a sensor does not contain an HES interface, it must be connected to a device concentrator. More than one sensor may be mounted in one physical box. Each HES interface and associated sensor(s) are treated as a logical unit. If the sensor(s) are connected to a device concentrator containing an HES interface, that concentrator and all associated sensors are treated as one logical unit in the HES Lighting Model. This logical unit may be modeled as containing multiple objects.

2.1.5 Device concentrator

- Contains an HES interface.
- Encodes the states of sensors, dimmers, and switches into HES messages. This component is typically intended for switches, dimmers, and sensors that might not contain individual HES interfaces.

2.1.6 User interface

- A method for the user to select scenes and enter relevant parameters. This component may range from a bank of switches with some form of user feedback to a video display with keyboard or other I/O, including but not limited to audio or touch screen.
- May contain an HES interface. If a user interface does not contain an HES interface, it must be connected to an interface controller. If connected to an interface controller, the combination is considered a single logical unit in the HES Lighting Model. This logical unit may be modeled as containing multiple objects.

2.1.7 User interface concentrator

- A concentrator for accommodating multiple user interface control panels. This component eliminates the need for intelligence in each user interface.
- Contains an HES interface.

2.1.8 Lighting system controller

- A controller containing algorithms for operating the lighting system. The level of supervision of this controller over the lighting system components depends on the intelligence of the components, especially the fixtures.
- A lighting system controller may not be needed for simple applications, such as a light switch controlling a light. More complex applications may be accommodated by intelligence in the switch, dimmer, or user interface and the fixtures.
- The capabilities of a controller depend on the functions required and the controllers in the fixtures. A microprocessor-based fixture might need only parameters sent by the controller. For example, for a gradual dim operation, the fixture could control the rate of dimming to reach a target level in a time interval specified by a message from the controller. For a dumb fixture, the controller would send a series of level settings.

Copyright International Organization for Standardization
Provided by IHS under license with ISO
No reproduction or networking permitted without license from IHS Not for Resale

- May include algorithms for sending and receiving messages to/from other system controllers. For example, a security system controller might send a message to the lighting system controller requesting illumination where an intruder has been detected.
- Contains an HES interface.

2.2 Physical architecture

Each component attached to a home control system network medium must contain an HES interface. Please note that the user interface concentrator and the device concentrator are present if needed to support user interfaces, switches, dimmers, and sensor components, which may or may not contain HES interfaces. Figure 1 shows an example of components for a lighting system. In Figure 1, the switches, dimmers, and sensors connected to the medium are assumed to contain HES interfaces.

3 Logical Lighting Model

3.1 Logical architecture

The basic premise for the operation of a home automation lighting system is actuation of lamps remotely. Lamp actuation may be accomplished by a simple switch or dimmer, or by a complex scene programmed into a controller. The controller may provide synchronization and sequencing among numerous fixtures. Depending on the intelligence in the fixtures, the controller may actuate each change of lighting state or may set high level parameters into an intelligent fixture. To accommodate this range of sophistication in a lighting system, logical models are proposed for a very simple HES lighting system, a complex HES lighting system, and a hierarchically arranged HES lighting system.

3.2 Logical elements

A new logical element, the *lighting activator* is introduced to simplify the logical model. The lighting activator represents a source of signals that control at least one fixture remotely. An activator may be embodied physically in a simple device that generates on and off signals, such as a switch or a sensor. A lighting activator could be a hand-held unit with an infrared link that generates HES messages. For complex lighting systems, the lighting activator may actually be implemented in a microprocessor-based controller.

For logical consistency, another element is introduced. The *illuminator* represents a source of light and is typically a physical fixture that includes one or more lamps.

3.2.1 Simple HES lighting system

A simple HES lighting system contains one illuminator and a simple lighting activator, as in Figure 2. The simple lighting activator would be physically a switch or remote control unit. The fixture may or may not be intelligent.

The next subclause describes a more complex activator. Note that a simple table lamp with a built-in switch is not included in this model because it does not need the services of a home control system.

3.2.2 Complex HES lighting system

For complex lighting systems, the lighting activator may contain a microprocessor-based controller programmed with a lighting control algorithm. As shown in Figure 3, the user interfaces, switches, dimmers, and sensors may be remotely located and linked by the home control system to the activator. The user interface in the logical model might represent a video terminal for configuring the system while multiple room switches operate various lighting zones.

The controller in the activator is responsible for establishing priority among the user interfaces. It may require semaphore software to prevent contention if peer user interfaces are operated simultaneously. For example, the user might be able to configure the lighting system from multiple locations in the house. Once a configuration session is started from one location, all other user interface units should be disabled until the configuration procedure is completed (or times-out and is ignored).

Copyright International Organization for Standardization
Provided by IHS under license with ISO
No reproduction or networking permitted without license from IHS Not for Resale

Each illuminator in Figure 3 represents a device with a single HES interface. A illuminator may be implemented as a fixture containing multiple lamps that are individually controllable. In this case, the HES interface would be programmed to contain multiple objects representing the features of each lamp that can be altered via the home control system.

The logical linkage from the activator to other HES controllers provides communications among home control subsystems. For example, a security subsystem controller might send a message to the lighting activator upon detection of an intrusion in a particular room. The lights could be illuminated there to scare an intruder. Responsibility for lighting control remains with the activator. The security controller does not turn on the lights directly, but requests appropriate action by the lighting activator. This prevents contention for system resources. Note that in some implementations, a direct connection to the lights may be required by safety codes or chosen by the manufacturer.

3.2.3 Hierarchical lighting system

An HES lighting system with multiple lighting activators may be arranged in a hierarchy. Separate activators might be responsible for different sections of the house or different lighting applications, with a coordinating controller in charge of the entire system. This arrangement is shown in Figure 4. The lighting coordinator may contain external user interfaces. Note that the coordinator does not control any illuminators directly, but issues commands to the lighting activators, which send messages to the illuminators.

In Figure 3, the activator contains a possible connection to other home control subsystems. In a hierarchical arrangement, the lighting coordinator would include this connection. Thus, the coordinator is the point of contact with other subsystems.

This hierarchical model may include more than the two levels shown. (The author is aware of a commercial lighting system may be modeled by a hierarchy of four levels.) Note that a logical hierarchical arrangement does not imply a similar physical arrangement. A flat physical configuration may be organized into a logical lighting control system.

3.2.4 Distributed lighting system control

An alternate arrangement that accomplishes the functions of a hierarchical lighting system without a coordinating controller is illustrated in Figure 5. As in Figure 4, multiple lighting activators are responsible for different sections of the house or different lighting applications. However, they share the responsibilities of the coordinating controller. Special software is required to implement distributed control, to arbitrate conflicts, and possibly to assign priorities for control by each activator.

One activator might be designated the point of contact with other subsystems. Alternatively, the responsibilities for communications with other subsystems may be shared among the activators.

4 Lighting Use Cases

This clause presents examples of lighting applications. Each application is explained in words and illustrated with physical and logical models. These models are based on the components of the HES Lighting Model.

4.1 Case 1: Figures 6 and 7

A single switch or dimmer controlling two fixtures using a home control system for the linkage.

4.2 Case 2: Figures 8 and 9

A single switch controlling two fixtures. The light levels of both fixtures are modulated according to the room ambient lighting as detected by a light sensor. The series circuit that includes the switch with the light sensor is contained in the device concentrator in Figure 8.

Copyright International Organization for Standardization
Provided by IHS under license with ISO
No reproduction or networking permitted without license from IHS Not for Resale

4.3 Case 3: Figures 10 and 11

A single switch controlling two fixtures. Also, the fixtures may be activated by an occupancy detector. The light levels of the fixtures are modulated according to the room ambient lighting as detected by a light sensor. Delays are programmed to accommodate a person who is temporarily motionless (for example, while sitting at a desk).

4.4 Case 4: Figures 12 and 13

A group of fixtures can be set into one of N predefined scenes. The user control is a switch with N settings plus off. Each scene may be static or may change the fixture parameters (intensity, color, orientation, aperture, etc.) according to a preprogrammed plan. A user interface is provided for programming this plan.

4.5 Case 5: Figures 14 and 15

The fixtures in the house can be operated in a pseudo-random pattern when no one is present as part of a security system. The physical model does not show all fixtures and switches. Multiple lighting controllers may operate lights in different rooms or sections of the house. The security controller alerts the lighting controllers to start the pseudo-random pattern.

Other home automation subsystem controllers also may communicate with the lighting activator. For example, a life safety system controller might signal the lighting system to flash a warning to alert the occupants if a fire is detected.

5 HES Messages for Lighting

5.1 HES messages overview

The following messages are proposed for commands, status reports, or data to be exchanged among the logical components in the HES lighting system model. This message set does not imply that all lighting system components can or must support the features of each message. Messages will be chosen to support a specific implementation. These messages represent a variety of functionality, not necessarily implemented in any one system.

5.2 HES message list

Each message may be sent to a single device, to all devices (broadcast), or to a predefined group of devices.

5.2.1 Activator — Illuminator

- ON/OFF messages

  Turn on the addressed lamps in the fixture.
  Turn off the addressed lamps in the fixture.
  Set a visible indicator (message from illuminator)

- ON/OFF setup, activated by a later cue (trigger)

  Set the addressed lamps to turn on at the next cue.
  Set the addressed lamps to turn off at the next cue.
  Set the addressed lamps to turn on and off in a random pattern.

--`,,```,,,,````-`-`,,`,,`,`,,`---

Copyright International Organization for Standardization
Provided by IHS under license with ISO
No reproduction or networking permitted without license from IHS
Not for Resale

- Dimmer messages

  Dim the addressed lamps to a specified level in a specified time interval.
  Dim the addressed lamps by a specified % from full or current level in a specified time interval.
  Dim the addressed lamps to off in a specified time interval.
  Dim the addressed lamps to full on in a specified time interval.
  Stop the addressed lamps from dimming.
  Set a visible indicator (message from illuminator)

- Dimmer setup, activated by a later cue

  Set the addressed lamps to dim to a specified level in a specified time interval following receipt of a cue message.

5.2.2 Activator — User interface

- Simple messages

  These may correspond to the activator-illuminator messages for turn on/off or dim.

- Scene messages

  Activate a selected scene now.
  Activate a selected scene at a specified time.
  Change selected parameters in a scene.
  Deactivate a scene.
  Select the next scene and cross-fade timing to activate upon cue.

- Configuration messages

  These messages may include menus and graphical data to assist the user in specifying fixtures to be set for a particular scene, fixture parameters, timing parameters for cross-fades, etc. Messages will be provided to query an activator to determine scenes already programmed.

- Miscellaneous messages

  Included here are diagnostic requests and results, and other messages related to system management. If the activator has semaphore software to block conflicting access from multiple user interfaces to the same fixture, messages will be required to inform the user about priority and access privileges.

- Additional fixture parameters

  Similar messages for commands and setup instructions will be required to support capabilities in fixtures that may be developed for home use. Examples of such features found in commercial and theater fixtures include light color, focus, aperture, position in space and orientation.

- Cue the fixture to execute the messages already set.

- Status report

  Messages will be defined to request a report of the state of the fixture and to contain the report results. Contents of the report may include lamp on/off, lamp dim state, color, focus, aperture, position in space and orientation, etc. If fixtures contain built-in diagnostics, messages may be needed to trigger the diagnostic program and report the results. Diagnostics may be designed to determine if all lamps are working.

Copyright International Organization for Standardization
Provided by IHS under license with ISO
No reproduction or networking permitted without license from IHS Not for Resale

5.2.3 Coordinator — Activator

These messages are similar to those for activator-user interface. In addition, messages may be required for selecting or modifying algorithms in the activator. The coordinator may also issue special messages for enabling or blocking user access for control or configuration via a user interface.

5.2.4 Activator, Coordinator — Other controllers

A message from another subsystem controller describes any unusual condition detected by the other controller. For example, a message might contain a parameter indicating the level of an emergency and the location. The lighting activator or coordinator might be programmed to react with appropriate emergency lighting. A message from the activator or coordinator might indicate whether the lighting system changed state in response to the notification from the other subsystem controller. Test messages might be defined to allow the activator or coordinator to ensure working linkages to the other subsystem controllers.

Copyright International Organization for Standardization
Provided by IHS under license with ISO
No reproduction or networking permitted without license from IHS
Not for Resale

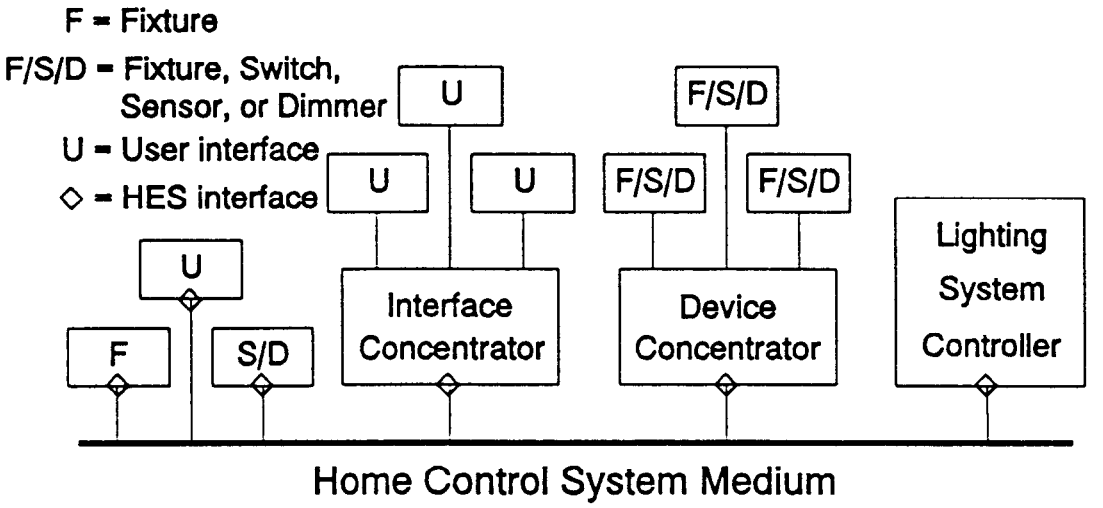

Figure 1: Example Illustrating Physical Components of an HES Lighting System

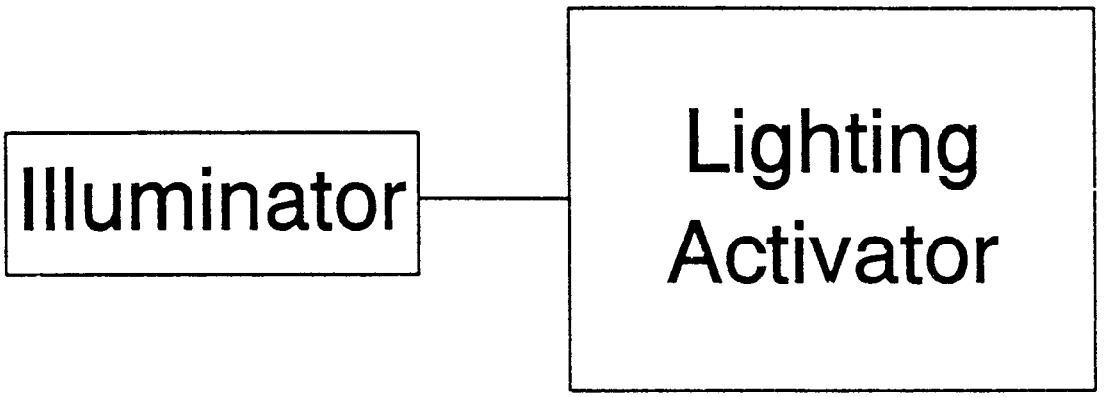

Figure 2: Logical Model of Simple HES Lighting System

Copyright International Organization for Standardization
Provided by IHS under license with ISO
No reproduction or networking permitted without license from IHS
Not for Resale

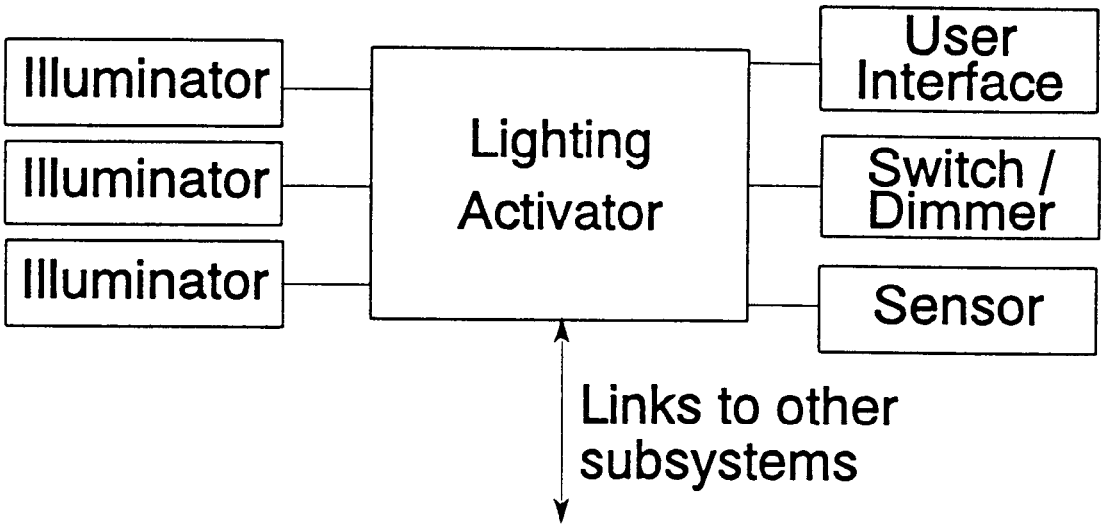

Figure 3: Logical Model of Complex HES Lighting System

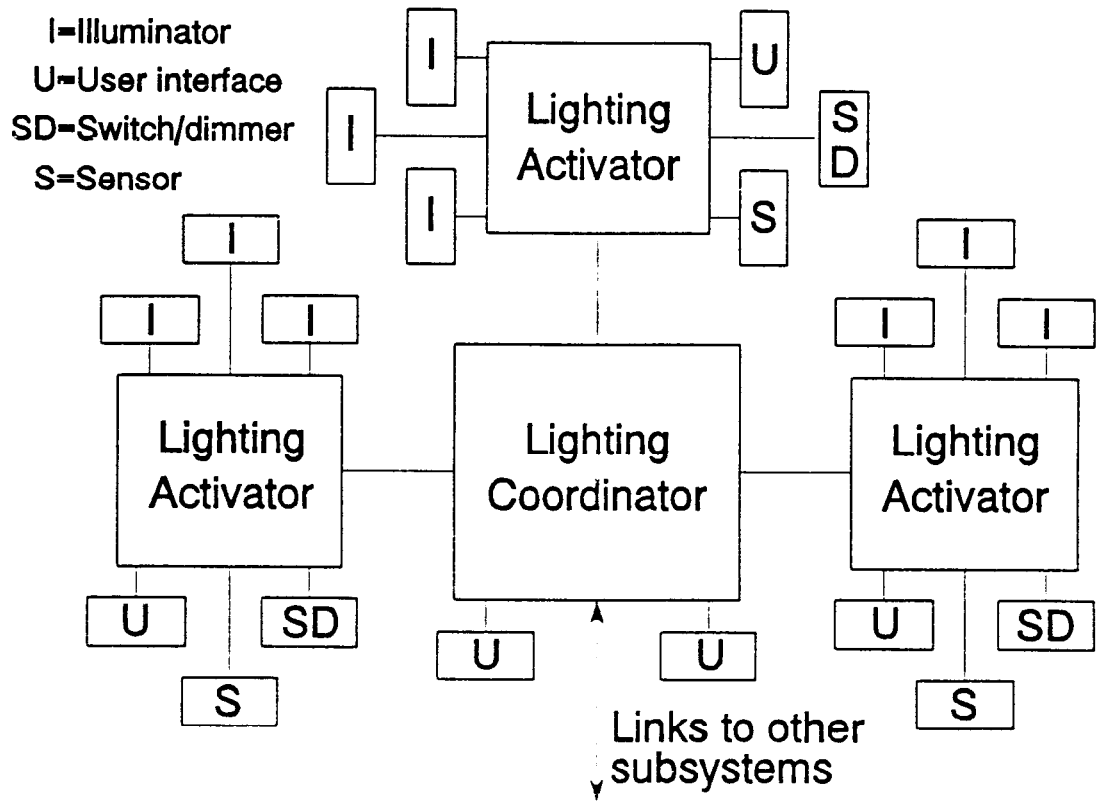

Figure 4: Logical Model of Hierarchical HES Lighting System

Copyright International Organization for Standardization
Provided by IHS under license with ISO
No reproduction or networking permitted without license from IHS
Not for Resale

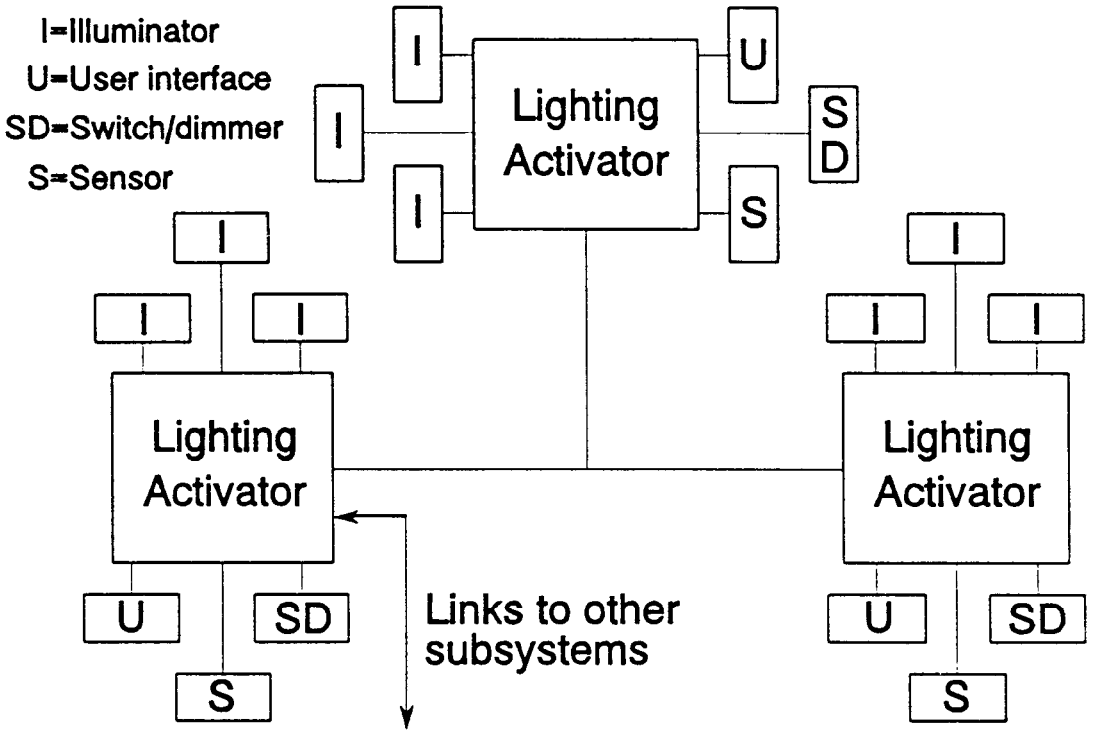

Figure 5: Logical Model of HES Distributed Lighting Control

Copyright International Organization for Standardization
Provided by IHS under license with ISO
No reproduction or networking permitted without license from IHS
Not for Resale

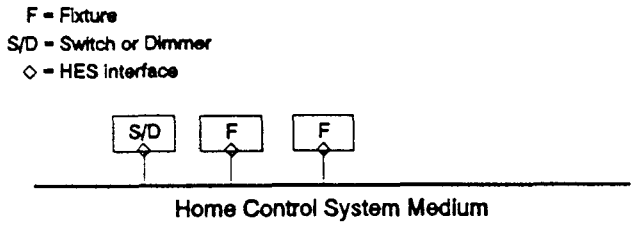

Figure 6: Case 1 — Physical Model

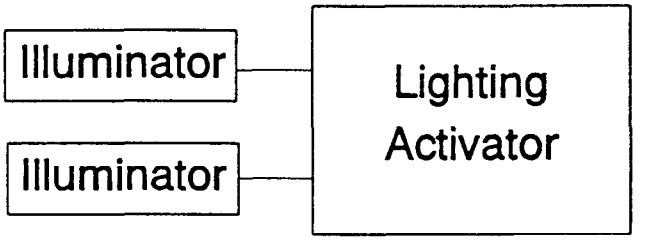

Figure 7: Case 1 — Logical Model

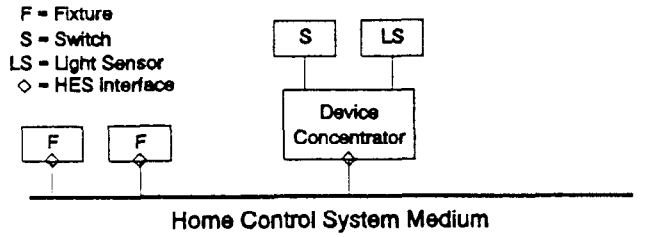

Figure 8: Case 2 — Physical Model

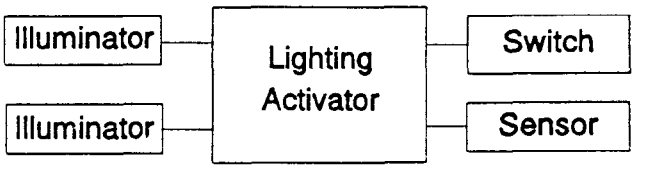

Figure 9: Case 2 — Logical Model

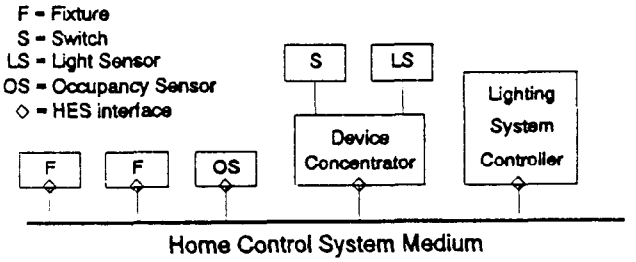

Figure 10: Case 3 — Physical Model

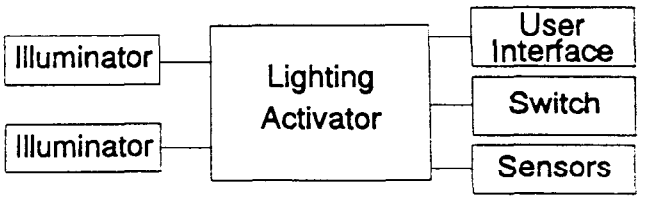

Figure 11: Case 3 — Logical Model

Copyright International Organization for Standardization
Provided by IHS under license with ISO
No reproduction or networking permitted without license from IHS
Not for Resale

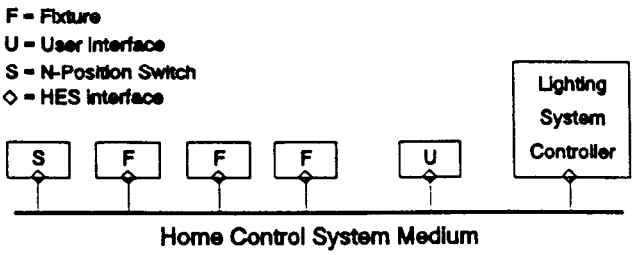

Figure 12: Case 4 — Physical Model

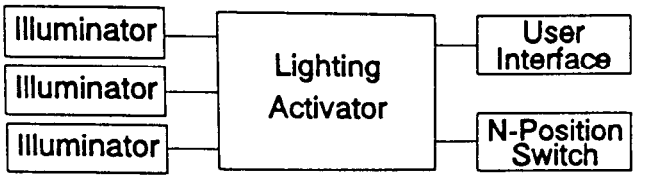

Figure 13: Case 4 — Logical Model

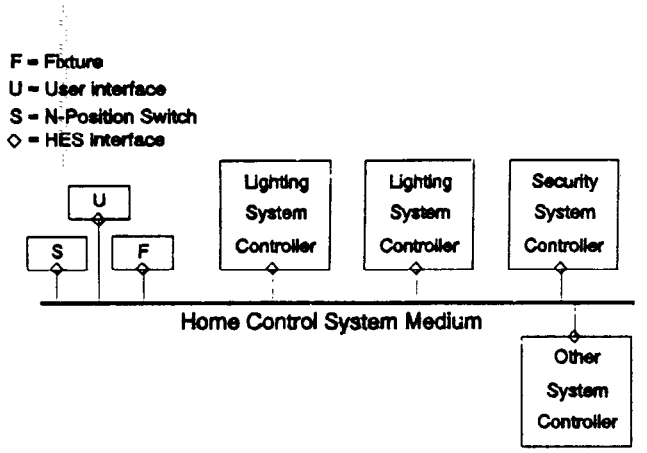

Figure 14: Case 5 — Physical Model

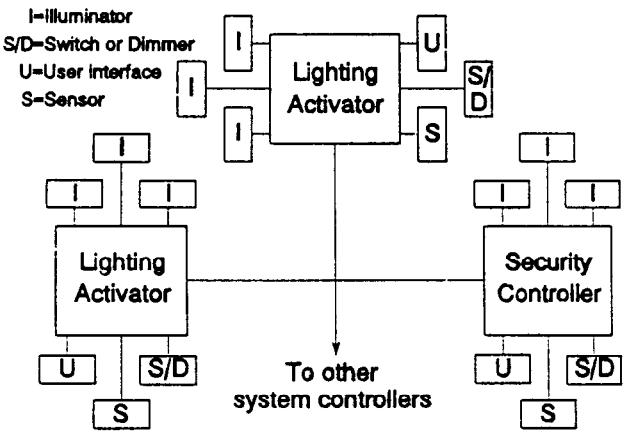

Figure 15: Case 5 — Logical Model

Copyright International Organization for Standardization
Provided by IHS under license with ISO
No reproduction or networking permitted without license from IHS
Not for Resale

© ISO/IEC

ICS 35.200

Descriptors: data processing, information interchange, home electronic systems, lighting, appliance interconnection, models.

Price based on 12 pages

Copyright International Organization for Standardization
Provided by IHS under license with ISO
No reproduction or networking permitted without license from IHS

Not for Resale