TECHNICAL REPORT

ISO/IEC TR 14543-4

First edition
2002-05

Information technology – Home electronic system (HES) architecture –

Part 4: Home and building automation in a mixed-use building



Reference number
ISO/IEC TR 14543-4:2002(E)

--`,,`-`-`,,`,,`,`,,`---

Copyright International Organization for Standardization
Provided by IHS under license with ISO
No reproduction or networking permitted without license from IHS

Not for Resale

Copyright International Organization for Standardization
Provided by IHS under license with ISO
No reproduction or networking permitted without license from IHS
Not for Resale

TECHNICAL REPORT – TYPE 2

ISO/IEC TR 14543-4

First edition
2002-05

Information technology – Home electronic system (HES) architecture –

Part 4: Home and building automation in a mixed-use building

© ISO/IEC 2002

All rights reserved. Unless otherwise specified, no part of this publication may be reproduced or utilized in any form or by any means, electronic or mechanical, including photocopying and microfilm, without permission in writing from the publisher.

ISO/IEC Copyright Office • Case postale 56 • CH-1211 Genève 20 • Switzerland



PRICE CODE J

For price, see current catalogue

Copyright International Organization for Standardization
Provided by IHS under license with ISO
No reproduction or networking permitted without license from IHS

Not for Resale

CONTENTS

FOREWORD 3
INTRODUCTION 5

1 Scope 6
2 Definitions 6
3 Relationship between home and building control 7
3.1 Control systems for a mixed-use building 7
3.2 Application interaction 8
3.2.1 Physical architecture 8
3.2.2 Logical architecture 10
3.2.3 Messages among application domains 15
4 Interconnected building and home systems 16
4.1 Linking building and home control 16
4.2 Network interface capabilities 16
4.3 An integrated control system 16

Figure 1 – Automation network spanning multiple media 9
Figure 2 – Physical components comprising application domains 10
Figure 3 – An application domain with application control 11
Figure 4 – Logical architecture of an HES application domain 11
Figure 5 – Interconnecting application domains as peers 12
Figure 6 – Interconnecting applications via an application co-ordinator 13
Figure 7 – Example of a distributed application domain 13
Figure 8 – Logical Representation of Example in Figure 7 14
Figure 9 – Multiple application domains with distributed control 15
Figure 10 – Physical integration of building services control as a controller based system 17
Figure 11 – Physical Integration of building services control as a fully distributed system 18

--`,,`-`-`,,`,,`,`,,`---

Copyright International Organization for Standardization
Provided by IHS under license with ISO
No reproduction or networking permitted without license from IHS Not for Resale

INFORMATION TECHNOLOGY – HOME ELECTRONIC SYSTEM (HES) ARCHITECTURE

Part 4: Home and building automation in a mixed-use building

FOREWORD

1) ISO (International Organization for Standardization) and IEC (International Electrotechnical Commission) form the specialized system for worldwide standardization. National bodies that are members of ISO or IEC participate in the development of International Standards through technical committees established by the respective organization to deal with particular fields of technical activity. ISO and IEC technical committees collaborate in fields of mutual interest. Other international organizations, governmental and non-governmental, in liaison with ISO and IEC, also take part in the work.
2) In the field of information technology, ISO and IEC have established a joint technical committee, ISO/IEC JTC 1. Draft International Standards adopted by the joint technical committee are circulated to national bodies for voting. Publication as an International Standard requires approval by at least 75 % of the national bodies casting a vote.
3) Attention is drawn to the possibility that some of the elements of this Technical Report may be the subject of patent rights. ISO and IEC shall not be held responsible for identifying any or all such patent rights.

The main task of IEC and ISO technical committees is to prepare International Standards. In exceptional circumstances, a technical committee may propose the publication of a technical report of one of the following types:

- type 1, when the required support cannot be obtained for the publication of an International Standard, despite repeated efforts;
- type 2, when the subject is still under technical development or where, for any other reason, there is the future but not immediate possibility of an agreement on an International Standard;
- type 3, when the technical committee has collected data of a different kind from that which is normally published as an International Standard, for example ‘state of the art’.

Technical reports of types 1 and 2 are subject to review within three years of publication to decide whether they can be transformed into International Standards. Technical reports of type 3 do not necessarily have to be reviewed until the data they provide are considered to be no longer valid or useful.

ISO/IEC TR 14543-4, which is a technical report of type 2, was prepared by subcommittee 25: Interconnection of information technology equipment, of ISO/IEC joint technical committee 1: Information technology.

This publication was drafted in accordance with the ISO/IEC Directives, Part 2.

This document is issued in the type 2 technical report series of publications (according to 15.2.2 of the Procedures for the technical work of ISO/IEC JTC 1 (1998)) as a prospective standard for provisional application in the field of the Home Electronic System (HES), because there is an urgent requirement for guidance on how standards in this field should be used.

This document is not to be regarded as an International Standard. It is proposed for provisional application so that information and experience of its use in practice may be gathered. Comments on the content of this document should be sent to IEC Central Office.

A review of this type 2 technical report will be carried out not later than three years after its publication with the option of extension for a further three years of either conversion into an International Standard or withdrawal.

Copyright International Organization for Standardization
Provided by IHS under license with ISO
No reproduction or networking permitted without license from IHS Not for Resale

ISO/IEC TR 14543, *Information technology – Home Electronic system (HES) architecture* consists of four parts:

Part 1: Introduction

Part 2: Device modularity

Part 3: Communication layers

Part 4: Home and building automation in a mixed-use building

--`,,`-`-`,,`,,`,`,,`---

Copyright International Organization for Standardization
Provided by IHS under license with ISO
No reproduction or networking permitted without license from IHS Not for Resale

INTRODUCTION

This technical report explores the similarities and differences between home and building control systems in an environment where both home and building control interact, namely, a mixed-use residential/commercial building.

A logical model for linking building and home control systems is specified. Models showing the organization of application domains, such as energy management and lighting, are included. The option of managing an application domain with a single application controller versus a Fully Distributed System is considered.

Methods for overall building management are presented. The interaction of building and home control systems requires a demarcation between building manager versus tenant responsibilities, as explained in this document. A method for implementing agreements between building managers and tenants regarding user access to and control of applications via a firewall is specified.

Copyright International Organization for Standardization
Provided by IHS under license with ISO
No reproduction or networking permitted without license from IHS Not for Resale

INFORMATION TECHNOLOGY – HOME ELECTRONIC SYSTEM (HES) ARCHITECTURE

Part 4: Home and building automation in a mixed-use building

1 Scope

This part of ISO/IEC 14543 presents methods for overall building management of the home electronic system (HES) architecture. The interaction of building and home control systems requires a demarcation between building manager versus tenant responsibilities. A method for implementing agreements between building managers and tenants regarding user access to and control of applications via a firewall is specified.

This technical report augments series ISO/IEC 14543, the architecture of HES (Home Electronic System), in order to accommodate both home and building automation in a mixed-use building. Both systems may coexist in a building with shops, offices and apartments. Some systems are applicable to the whole building versus the systems which are applicable to individual apartments and offices only. In some cases these systems need to interact.

This technical report proposes a logical model for linking building and home control systems even if the two use different physical arrangements of components. The basic recommendations are:

- allow for distinct and separate building and home automation control systems, possibly supplied by different manufacturers;
- define clear points of connection between building and home control systems;
- limit the number of points of connection between building and home control systems, preferably to one per home system;
- accommodate systems that provide building tenants with user control of local systems. This favors an architecture where products can be designed for the user to override control decisions within parameters agreed with building management. Such actions are exercised by the building automation system and affect local systems. This enhances user safety and user privacy;
- provide seamless links between systems that are based on different architectures, that incorporate different communications protocols, and that may be purchased from different manufacturers.

2 Definitions

For the purpose of this part of ISO/IEC 14543 the following definitions apply.

2.1
application controller
controller responsible for managing the operation of an application domain

An application controller may be a physical device, or the application control functions may be distributed in related devices such as sensors, actuators and appliances.

2.2
application co-ordinator
controller responsible for managing a group of application domains

The application co-ordinator may provide common scheduling for the applications and facilitate status notification among the applications. The functionality of the application co-ordinator may

Copyright International Organization for Standardization
Provided by IHS under license with ISO
No reproduction or networking permitted without license from IHS Not for Resale

be distributed among application controllers or among other network components that provide the application services.

2.3
application domain
logically related group of components that provide the functions of an application in a home or building

Typical components include sensors, actuators, user-interface devices and controllers. Examples of application domains are lighting, security, energy management and HVAC (heating, ventilating and air-conditioning).

2.4
distributed application
application domain where the functionality of application domain management is distributed over related devices

The presence of an application controller as a physical device is optional in such a system.

2.5
fully distributed system
system comprising multiple application domains where the functionality of application domain management is distributed over related devices

The presence of application controllers as physical devices is optional in such a system.

2.6
network interface
logical element linking a building control network with a Tenant Unit network

The functions of the Network Interface include adaptation across different communications media and protocols, and regulation of data flow across the interface to allow remote access and enforce privacy agreements.

2.7
tenant unit
generic term for a residential apartment or office suite within a building

A Tenant Unit may include automation systems that complement the building control system. Tenant Unit automation systems and building automation systems may be interconnected, but the control and operating parameters may differ. The term Tenant Unit in this technical report may apply to units within a building that are leased or owned. This term refers generically to a residential apartment in a building, an office, or even a hotel room. Where the usage is clear, this term may be abbreviated as Unit.

3 Relationship between home and building control

3.1 Control systems for a mixed-use building

In a mixed-use residential/commercial building, home and building control systems may need to interact, as follows.

- Building control

  Building control systems provide common-area services, such as access control and security. Offices within the building may have similar scaled-down systems for control within the office.

- Office control

  Office control systems are typically small and similar to home control systems. For convenience, office control systems and home control systems will be collectively referenced as home automation systems in this document.

--`,,`-`-`,,`,,`,`,,`---
Copyright International Organization for Standardization
Provided by IHS under license with ISO
No reproduction or networking permitted without license from IHS Not for Resale

- Home control

  Home automation applications may be installed in tenant units, as desired for providing services such as lighting and entertainment.

- Home and building control

  Certain applications of a system may need to interact among individual tenant units and the building. Examples include energy management and life safety equipment.

3.2 Application interaction

3.2.1 Physical architecture

Traditional building and home systems have been designed to provide specific applications such as lighting, security and HVAC. A hallmark of home and building automation is the integration of components into applications that may span many domains. Each application is called an application domain. This subclause illustrates the physical structure that HES-conforming systems should follow to enable integration among applications.

The components of a home or building control system include sensors, actuators, user-interface devices and controllers. Some applications do not require this complement of devices. For example, the functionality of a controller may be incorporated into a sensor or a user-interface device.

Figure 1 illustrates a physical architecture of HES devices sharing a common communications bus implemented on three different media. An HES device is one that conforms to an HES standard. The physical components constituting multiple application domains may share the same communications media[1)]. Furthermore, some components such as sensors may serve more than one application domain.

The media shown in Figure 1 are interconnected via a Media Coupler, which may be a bridge or a router. (The use of bridges or routers between media implies that all the devices use a common messaging and/or event-notification language.) The choice of a medium for a particular component depends on such practical factors as convenience, location and cost.

1) Each medium name in Figure 1 is followed by an abbreviation used in subsequent figures. In addition to the three media shown, radio frequency (RF), infrared (IR), and fibre optics (FO) are often used in home and building automation systems.

Copyright International Organization for Standardization
Provided by IHS under license with ISO
No reproduction or networking permitted without license from IHS Not for Resale

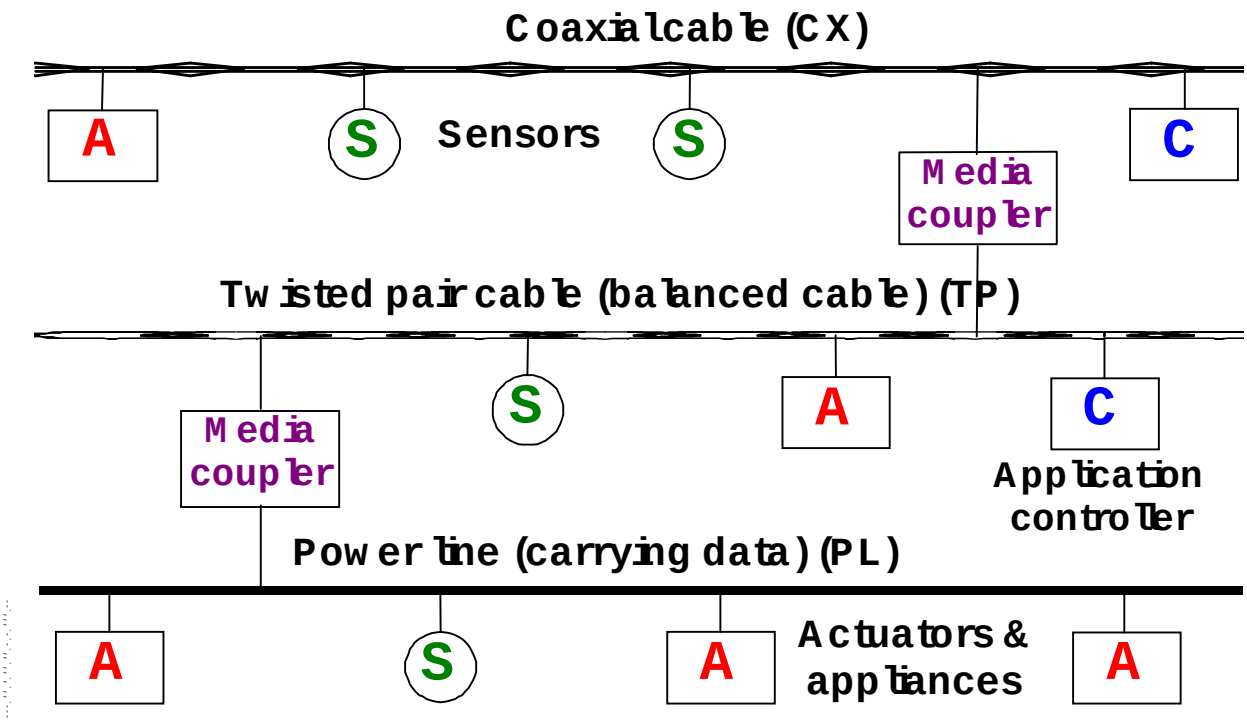

Not shown (to simplify the drawing): RF, IR, FO (see Footnote 1, previous page)

Figure 1 – Automation network spanning multiple media

The physical architecture of Figure 1 is repeated in Figure 2 where various components are grouped into different applications. Application #1 (in Figure 2) includes an actuator (or appliance), two sensors and a controller. Application #2 comprises two sensors and two actuators but no explicit application controller. The control functions may be built into the physical components. Note that Application #1 and Application #2 share an actuator and one sensor. Likewise, Application #2 and Application #3 share a sensor. An application implemented without an explicit controller is called a Distributed Application.

Copyright International Organization for Standardization
Provided by IHS under license with ISO
No reproduction or networking permitted without license from IHS
Not for Resale

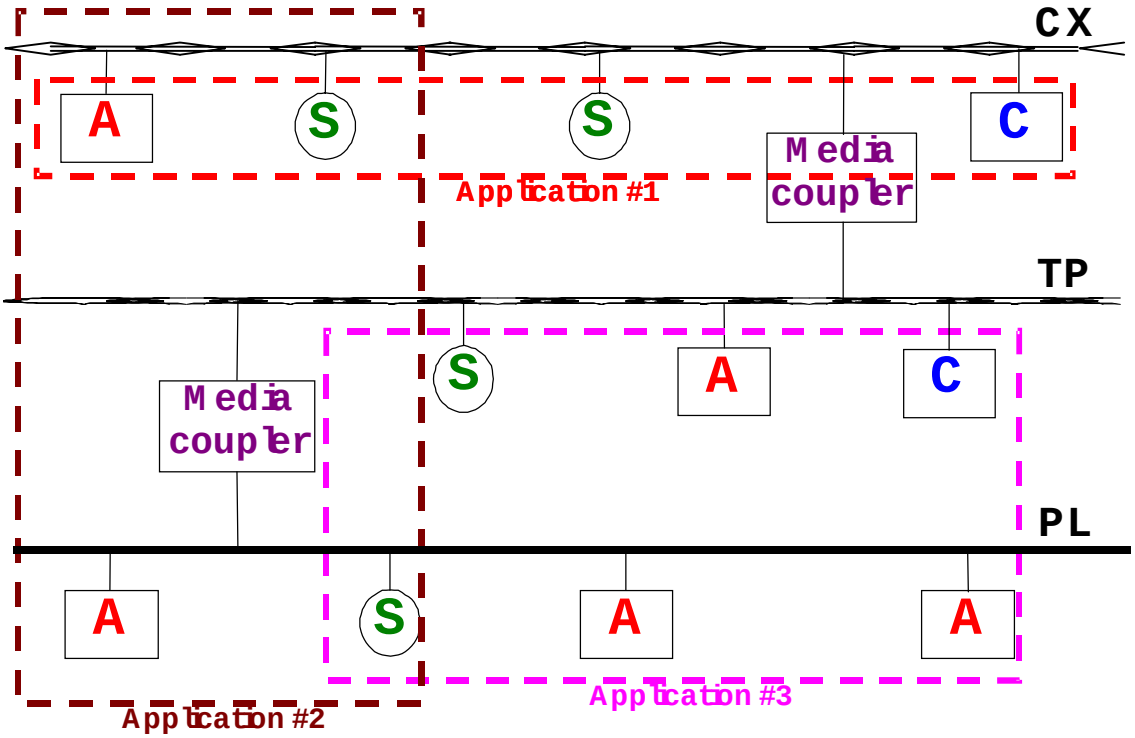

Not shown (to simplify the drawing): RF, IR, FO (see Footnote 1, see page 8)

Figure 2 – Physical components comprising application domains

3.2.2 Logical architecture

Control applications for homes and buildings, such as security and lighting, have traditionally been developed, installed and maintained by separate companies. Each application includes a complement of sensors, actuators, user interfaces and optionally an application controller. This has been the practice. However, two important trends are emerging:

a) some manufacturers are supplying system components engineered for multiple different application domains. These devices may share a common bus. The functions of these devices are defined by software. Therefore, the grouping of components into application domains is presented to indicate logical relationship not physical connections;

b) the control of applications is trending from controller-centric to control that is distributed among the components of the application. Therefore, the following logical models are divided into “controller-based” and “distributed.”

A logical diagram is an abstract representation of the association among network components. Associated components inter-communicate in order to implement an application domain. Logical associations are enabled by physical pathways and established in software and firmware. The physical pathways may range from a common bus to interconnected media joined via media couplers. The objective of a logical diagram is to focus on the relationship among the components without concern for the physical pathways.

3.2.2.1 Controller-based logical model

The devices that constitute a single application may be joined physically by a common bus, as shown in figure 3. These physical elements constitute a single application domain. A remote-controlled lamp may be represented simply with one user-interface device and an actuator. A sophisticated lighting control system might include a user-interface control panel, light-level sensors, actuators within multiple fixtures and an application controller to manage lighting scenes and timed transitions between scenes.

--`,,`-`-`,,`,,`,`,,`---

Copyright International Organization for Standardization
Provided by IHS under license with ISO
No reproduction or networking permitted without license from IHS Not for Resale

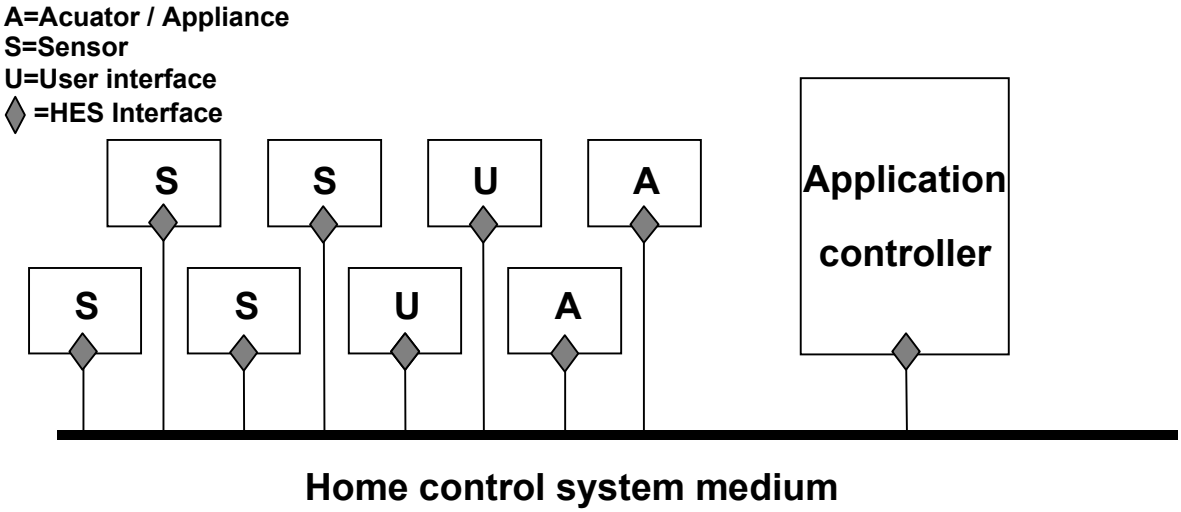

Figure 3 – An application domain with application controller

Logically, these devices may be drawn as shown in Figure 4. The dotted lines represent relationships among the components, not physical connections. These logical relationships may be established in software or firmware.

In Figure 3 and Figure 4, the control functions of the application are provided by an application controller. The devices, supervised by the application controller, may be appliances, user interfaces, sensors or actuators. The application controller is intended to augment the features of these components and provide additional services to the user.

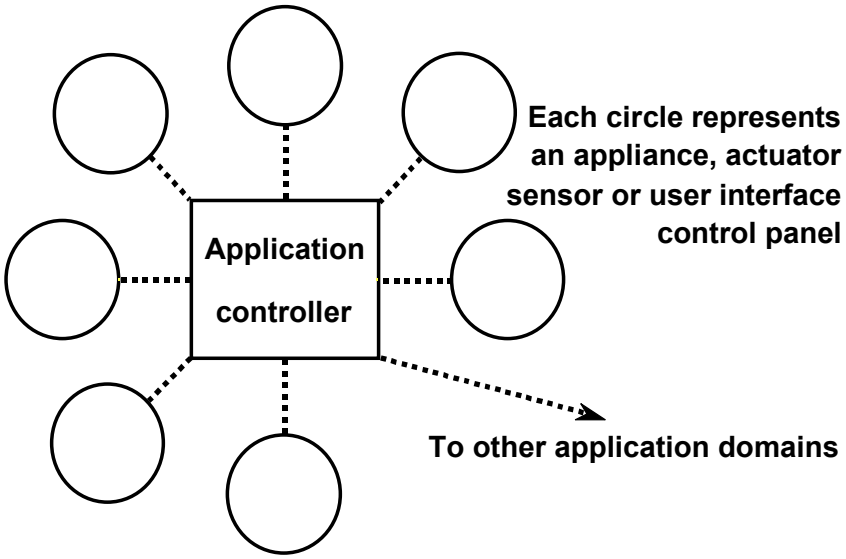

Figure 4 – Logical architecture of an HES application domain

Copyright International Organization for Standardization
Provided by IHS under license with ISO
No reproduction or networking permitted without license from IHS
Not for Resale

Multiple application domains may be connected as shown logically in Figure 5. Each application controller supervises a single application domain, as shown in Figure 4. These controllers are interconnected for exchange of status and commands. Components may be shared among application domains.

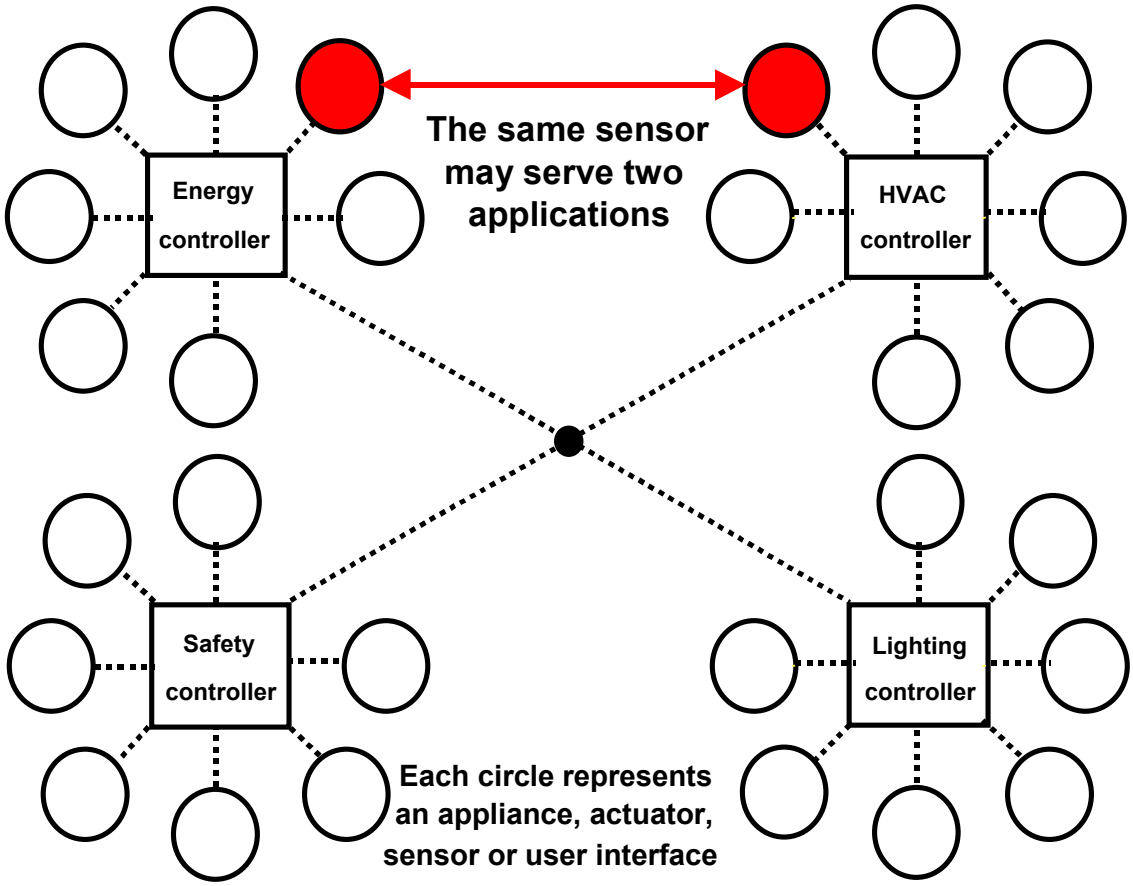

Figure 5 – Interconnecting application domains as peers

Figure 6 illustrates an alternate arrangement for multiple application domains. Here, the responsibility for scheduling and co-ordination is shifted from the application controllers to the application co-ordinator.

The application co-ordinator off-loads much of the software complexity for interaction among application domains. Also, as new application domains are added, reprogramming is simpler because changes are concentrated in the application co-ordinator module. The scheduling and co-ordinating of application control functions to establish a time sequence and orderly operation among application domains may be compared to the duties of a head butler overseeing a staff of servants performing compartmentalized chores.

The system model of Figure 6 also may represent a complex hierarchical system providing an integration application in a large building. For example, in an HVAC system the application co-ordinator might manage a central boiler and chiller while the application controllers run the VAV (Variable Air Volume) boxes.

Copyright International Organization for Standardization
Provided by IHS under license with ISO
No reproduction or networking permitted without license from IHS Not for Resale

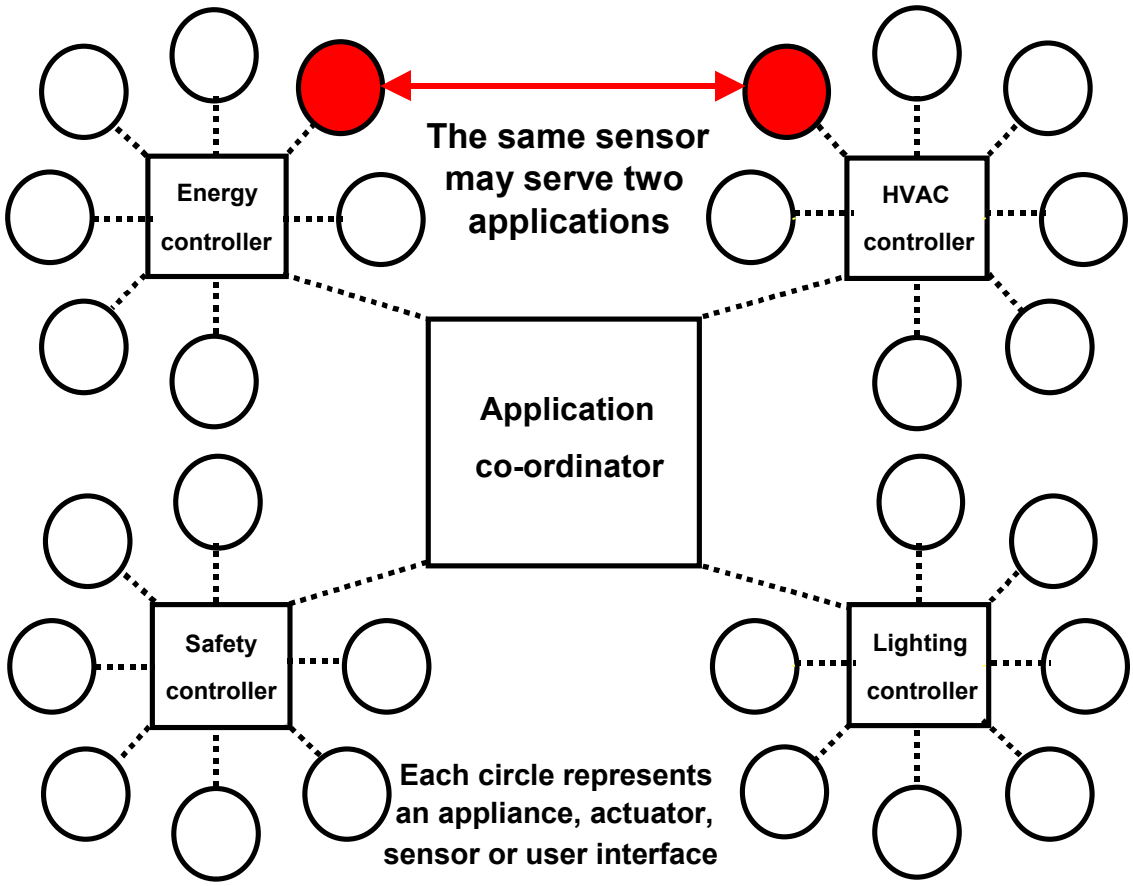

Figure 6 – Interconnecting applications via an application co-ordinator

3.2.2.2 Distributed logical model

The trend in home and building automation design is to organize intelligent appliances and related components into an integrated application domain without using a physical application controller. The physical components may share a common bus without a controller, as shown in Figure 7.

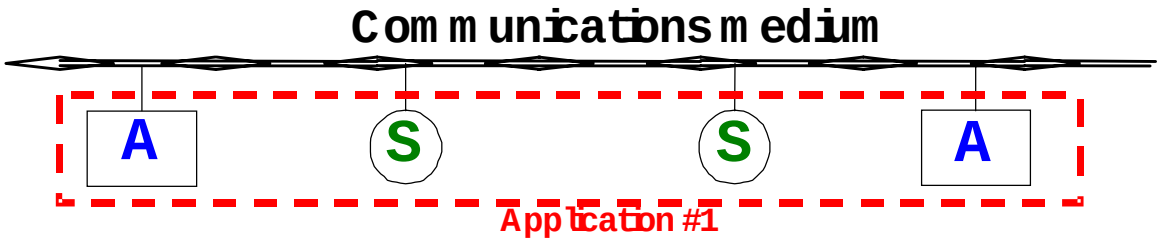

Figure 7 – Example of a distributed application domain

In Figure 8, these components are shown as circles with dotted lines to emphasize the relationships among the components. The logical connection to other applications is shown via a shared sensor. The dotted lines do not indicate physical pathways but rather logical connections. These logical connections are entirely independent of the underlying communications media and media couplers, such as bridges, routers and repeaters. A dotted line indicates that two devices exchange data to realize a function within an application domain. Some devices might exchange data with devices belonging to another application domain as indicated in Figure 8 by the arrow pointing “To other application domain.”

Copyright International Organization for Standardization
Provided by IHS under license with ISO
No reproduction or networking permitted without license from IHS Not for Resale

The two sensors in Figure 8 might represent push buttons while the two actuators represent light dimming actuators. One push button is used for switching and dimming the lights as well as for opening and closing blinds belonging to another application domain. The other push button is an “All Off” switch that turns off both lamps as well as the heating which also belongs to another application domain. Note that the logical links between devices belonging to different application domains are in principle not different from those linking devices within one application domain. Components within the dashed line serve a single application domain. However, components may be shared by one or more application domain.

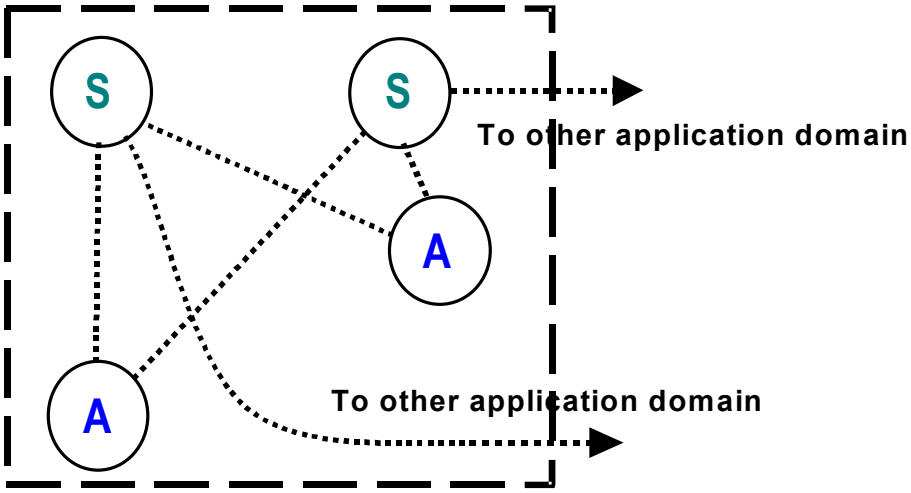

Figure 8 – Logical Representation of Example in Figure 7

Figure 9 extends the single distributed application of Figure 8 to a fully distributed system supporting multiple application domains. The example in Figure 9 includes a lighting application domain with several push buttons, each of which switches a lamp, plus an “All Off” button that also turns off the heating system. The safety application has a safety master cyclically requesting the status of several sensors. Additionally there is an energy application domain connected in some way to the HVAC system.

Copyright International Organization for Standardization
Provided by IHS under license with ISO
No reproduction or networking permitted without license from IHS
Not for Resale

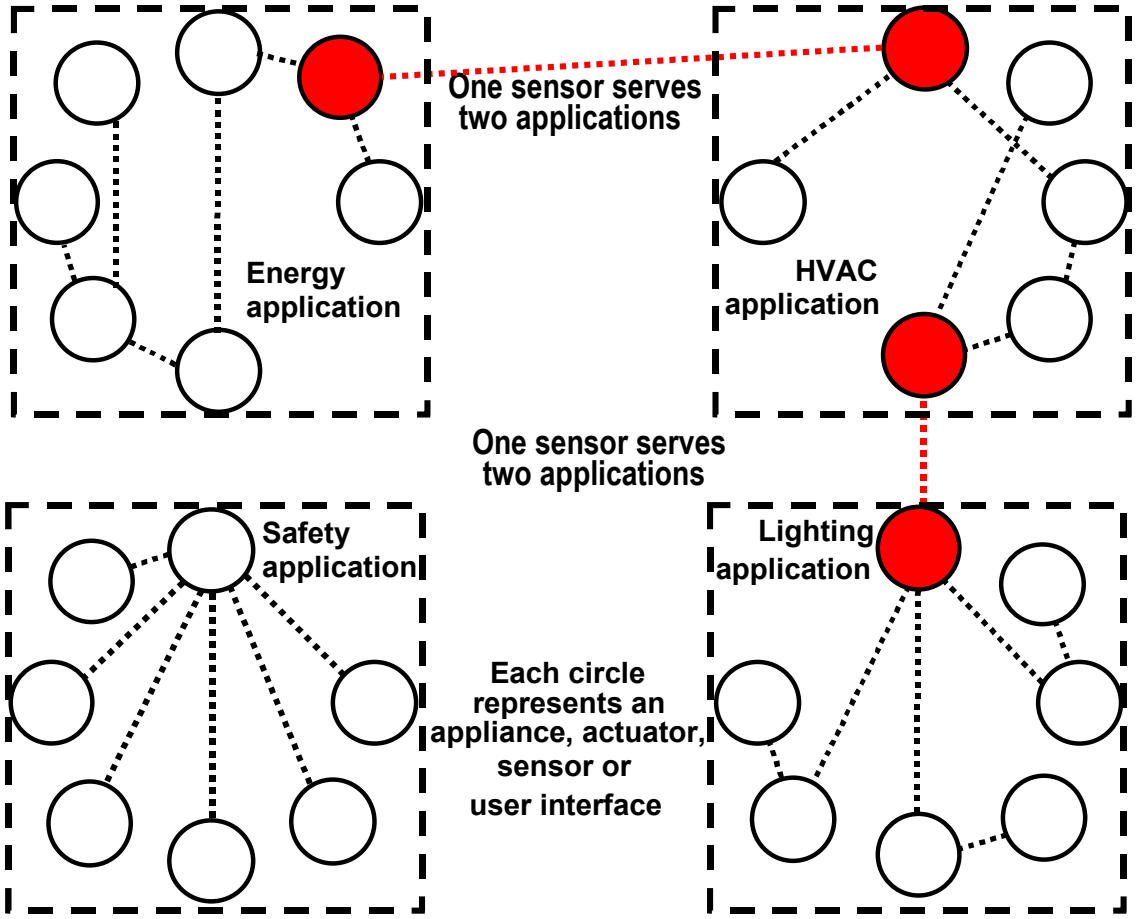

Figure 9 – Multiple application domains with distributed control

Components such as sensors that logically serve different applications may actually be physically the same and shared by the applications. Furthermore, all the components may be physically connected to a common bus. The illustration of components clustered into application domains is meant to represent the application functions logically. Different manufacturers or operations personnel may be responsible for the various application domains even while sharing components. They may view the system as separate application domains even though physical boundaries may not exist, as was shown in Figure 2. Thus, Figure 9 is an alternate representation of Figure 2.

3.2.3 Messages among application domains

As messages are passed among application domains, the appropriate reactions of the devices should be determined. For example, if a window sensor issues a message that the window has been opened, the heating might be programmed to turn down. The same sensor message could be received by the safety application domain which might initiate an intrusion alarm. In another case, if a safety application reports a fire, a lighting system might illuminate an appropriate scene to facilitate a safe exit.

Sharing of components requires that messages conform to standardized data formats. Furthermore, the relationship among the components should be programmed upon installation or dynamically. The reaction of application controllers and components to messages from other application domains depends on the device programming. It is challenging for manufacturers to anticipate all possible messages from a variety of other application domains and to program

Copyright International Organization for Standardization
Provided by IHS under license with ISO
No reproduction or networking permitted without license from IHS
Not for Resale

suitable reactions. Guidelines for interoperability (under development for HES as ISO/IEC 18012[2)] may facilitate device programming and configuration.

4 Interconnected building and home systems

4.1 Linking building and home control

Some application domains in the previous clause may be responsible for building control while others serve individual tenant units. The HES model precludes direct links from the building control system to sensors, actuators and appliances in each Tenant Unit.

A home control system within a tenant unit may be linked to the building control system by a device that adapts to any differences in communications media and protocols between the building and apartment unit systems. HES specifies a Network Interface to provide the link between building control services and the automation components in the Tenant Unit.

For example, there should be one link between a building HVAC (heating, ventilating and air-conditioning) control system and the HVAC systems in each Tenant Unit. This means that the building control system should not be able to exercise direct control over each Tenant Unit HVAC sensor and actuator. In this way, the Tenant Unit Network Interface may block certain actions according to the occupant's wishes or to protect the occupant's privacy.

4.2 Network interface capabilities

The network interface provides the following functionality.

- Bus load minimization

  Data packets with origin and destination in one Tenant Unit are prevented from leaving the Unit and thus increasing the bus load of the building control system unnecessarily. The same holds for packets within the building control system that are not destined for a Unit. The Network Interface prevents these packets from entering the Unit automation system.

- Access protection

  To use an Internet term, the HES standard defines a *firewall* for selected control of signals between the central building functions and local office or apartment functions. Please note that this technical report does not mandate any specific firewall capabilities. The firewall functions might be null. However, this architecture supports the introduction of firewall functions at the option of manufacturers. If this architecture is not instituted now, firewall protections will be difficult to install later.

  Firewall function specifications are included in the HES standard for the residential gateway, called *HomeGate*. Please see ISO/IEC 15045[3)] for details about “HES HomeGate: A Residential gateway model for HES.” This standard defines methods for data transfers via the Network Interface using an authorization mechanism.

- Functional checks

  The Network Interface may be able to perform regular functional checks of the devices connected to a home control system. If a device failure is discovered, an alarm package may be issued informing the occupants and building manager of this failure.

4.3 An integrated control system

An integrated control system among tenant units and the building is illustrated as a controller-based system in Figure 10 and as a fully distributed system in Figure 11. Note that the building controller accesses sensors and actuators for common building functions only, such as

---

2) ISO/IEC 18012 (all parts), *Information technology – Home electronic system (HES) guidelines for product interoperability* (under consideration)

3) ISO/IEC 15045 (all parts), *Information technology – Home electronic system (HES) gateway* (under consideration)

--`,,`-`-`,,`,,`,`,,`---

Copyright International Organization for Standardization
Provided by IHS under license with ISO
No reproduction or networking permitted without license from IHS Not for Resale

environmental control of building corridors. Apartment or office control messages are sent to local controllers via the Network Interface. There the messages may be conveyed into the Tenant Unit or may be altered or blocked according to a prior agreement between the tenant and the building manager. The physical unit containing the Network Interface function may also include application control functions for various application domains in the Tenant Unit. The Network Interfaces in Figure 10 and Figure 11 are assumed to manage the Tenant Unit link to the building and the application control functions within each Unit.

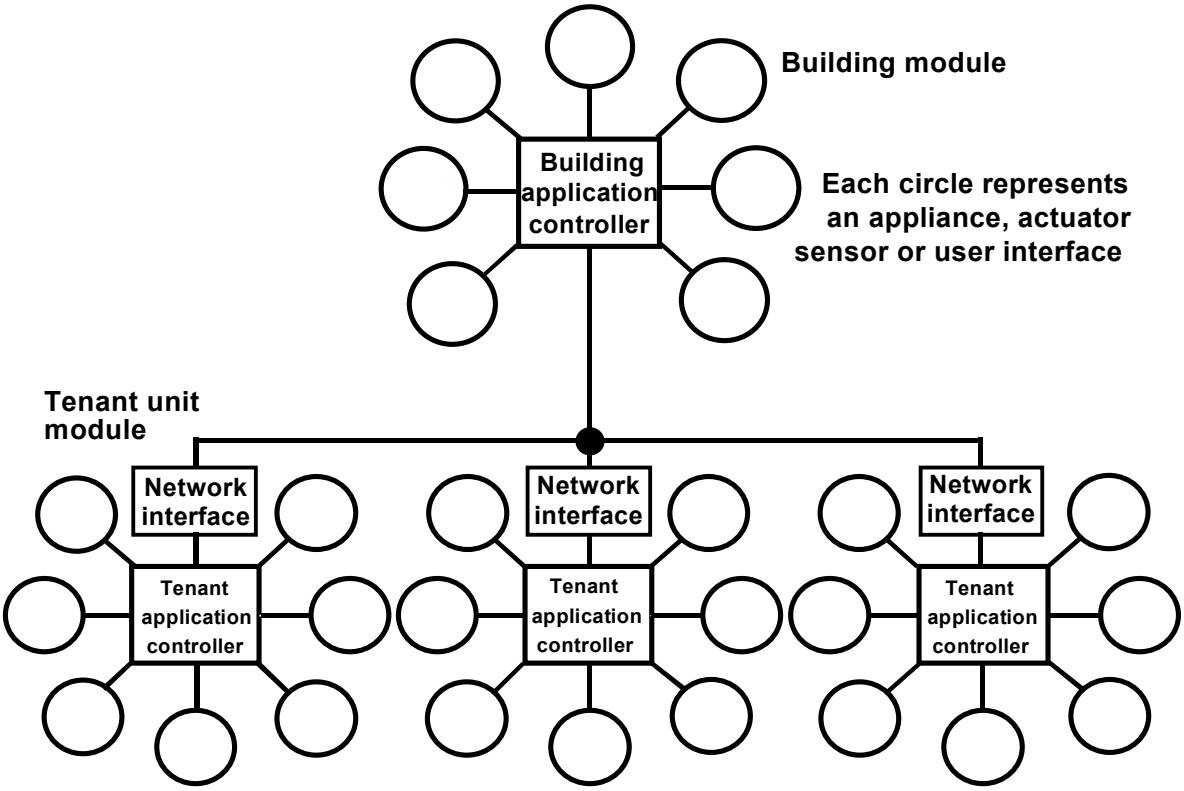

Figure 10 – Physical integration of building services control as a controller based system

--`,,`-`-`,,`,,`,`,,`---

Copyright International Organization for Standardization
Provided by IHS under license with ISO
No reproduction or networking permitted without license from IHS Not for Resale

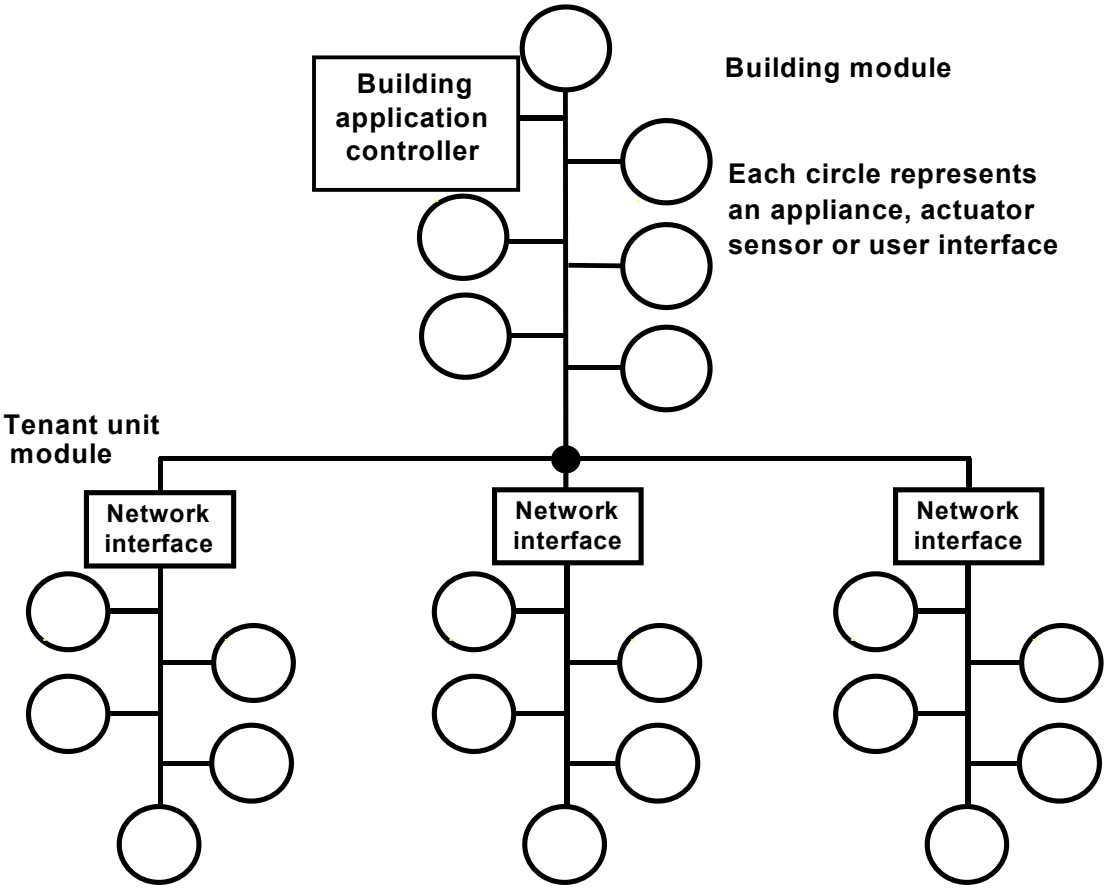

Figure 11 – Physical integration of building services control as a fully distributed system

--`,,`-`-`,,`,,`,`,,`---

Copyright International Organization for Standardization
Provided by IHS under license with ISO
No reproduction or networking permitted without license from IHS
Not for Resale

--`,,,`-`-`,,`,,`,`,,`---

Copyright International Organization for Standardization
Provided by IHS under license with ISO
No reproduction or networking permitted without license from IHS

Not for Resale

ISBN 2-8318-6244-2



ICS 35.100.05

Typeset and printed by the IEC Central Office
GENEVA, SWITZERLAND

Copyright International Organization for Standardization
Provided by IHS under license with ISO
No reproduction or networking permitted without license from IHS

Not for Resale