ISO/IEC TR 14165-117

Edition 1.0 2007-09

TECHNICAL REPORT

Information technology – Fibre channel – Part 117: Methodologies for jitter and signal quality (MJSQ)



ISO/IEC TR 14165-117:2007(E)

Copyright International Organization for Standardization
Provided by IHS under license with ISO
No reproduction or networking permitted without license from IHS
Not for Resale

THIS PUBLICATION IS COPYRIGHT PROTECTED

Copyright © 2007 ISO/IEC, Geneva, Switzerland

All rights reserved. Unless otherwise specified, no part of this publication may be reproduced or utilized in any form or by any means, electronic or mechanical, including photocopying and microfilm, without permission in writing from either IEC or IEC's member National Committee in the country of the requester.

If you have any questions about ISO/IEC copyright or have an enquiry about obtaining additional rights to this publication, please contact the address below or your local IEC member National Committee for further information.

IEC Central Office
3, rue de Varembé
CH-1211 Geneva 20
Switzerland
Email: inmail@iec.ch
Web: www.iec.ch

About the IEC

The International Electrotechnical Commission (IEC) is the leading global organization that prepares and publishes International Standards for all electrical, electronic and related technologies.

About IEC publications

The technical content of IEC publications is kept under constant review by the IEC. Please make sure that you have the latest edition, a corrigenda or an amendment might have been published.

- Catalogue of IEC publications: www.iec.ch/searchpub

The IEC on-line Catalogue enables you to search by a variety of criteria (reference number, text, technical committee,…). It also gives information on projects, withdrawn and replaced publications.

- IEC Just Published: www.iec.ch/online_news/justpub

Stay up to date on all new IEC publications. Just Published details twice a month all new publications released. Available on-line and also by email.

- Electropedia: www.electropedia.org

The world's leading online dictionary of electronic and electrical terms containing more than 20 000 terms and definitions in English and French, with equivalent terms in additional languages. Also known as the International Electrotechnical Vocabulary online.

- Customer Service Centre: www.iec.ch/webstore/custserv

If you wish to give us your feedback on this publication or need further assistance, please visit the Customer Service Centre FAQ or contact us:

Email: csc@iec.ch
Tel.: +41 22 919 02 11
Fax: +41 22 919 03 00

Copyright International Organization for Standardization
Provided by IHS under license with ISO
No reproduction or networking permitted without license from IHS
Not for Resale

ISO/IEC TR 14165-117

Edition 1.0 2007-09

TECHNICAL REPORT

Information technology – Fibre channel – Part 117: Methodologies for jitter and signal quality (MJSQ)

INTERNATIONAL ELECTROTECHNICAL COMMISSION

PRICE CODE XE

ICS 35.000

ISBN 2-8318-9290-2

Copyright International Organization for Standardization
Provided by IHS under license with ISO
No reproduction or networking permitted without license from IHS

Not for Resale

Contents

Foreword 14

1 Scope 17
2 Normative references 18
2.1 Approved references 18
2.2 Other references 18
3 Definitions and conventions 18
3.1 Overview 18
3.2 Conventions 18
3.3 Keywords 19
3.4 Acronyms 19
3.5 Terms and definitions 20
4 Background for MJSQ 27
4.1 Overview 27
4.2 Relationship to SONET and receiver tolerance requirements 27
4.3 Relationship to earlier FC standards 28
4.4 Traditional measurement methodology risks 29
5 Jitter overview 30
5.1 Serial transmissions 30
5.2 Jitter output context 31
5.3 Jitter tolerance context 32
5.4 Jitter assumptions summary 32
5.5 FC-0 and MJS(-1) interface overview 32
5.6 Fibre channel physical architecture 33
6 Jitter fundamentals 37
6.1 Purpose of addressing all important signal levels 37
6.2 Essential properties of signals 37
6.2.1 Introduction 37
6.2.2 Signal amplitude versus signal level 37
6.2.3 Time, timing reference and jitter timing reference 37
6.2.4 Considerations when using hardware based jitter timing references 38
6.2.5 Jitter and noise relationship 38
6.2.6 Rising edges and falling edges 39
6.3 Number of events per bit-period 39
6.4 Statistical distribution at a specific signal level 41
6.5 Basic relationships within statistical jitter distributions 41
6.5.1 Overview 41
6.5.2 Description of mathematical model 43
6.5.3 Relationship between jitter and BER for random jitter distributions 44
6.5.4 Effects of changing the standard deviation for Gaussian PDF's 46
6.5.5 Common mistakes relating to statistical properties of measurements. 46
6.5.6 Addition of deterministic jitter 46
6.6 Jitter eye mask methodology for signal quality specification 49
6.7 Signal measurements versus jitter eye mask signal quality specifications 51
6.8 Jitter timing reference at different signal levels during data acquisition 52
6.9 Example of a 2-dimensional jitter measurement 52
6.10 Jitter timing reference frequency response requirements 53
6.10.1 Overview 53
6.10.2 Performance specification for a hardware implementation of a Golden PLL 59
6.11 Jitter frequency concepts 62
6.12 Jitter output measurement methodologies 63
6.12.1 Time domain 63
6.12.2 Frequency domain 63
6.13 Effects of varying jitter distributions on BER 63

Copyright International Organization for Standardization
Provided by IHS under license with ISO
No reproduction or networking permitted without license from IHS
Not for Resale

6.14 Methodology for jitter and signal quality specification for “processed” signals 64
6.14.1 Background 64
6.14.2 Link components that contain compensation properties (equalization) 64
6.14.2.1 Compensation 64
6.14.2.2 Transmitter compensation. 65
6.14.2.3 Interconnect compensation 66
6.14.2.4 Receiver compensation. 66
6.15 Determination of compliance 67
6.16 Extremely stressful data patterns and scrambling 68
7 Jitter causes and jitter distribution 68
7.1 Jitter contribution elements 68
7.2 Jitter distribution 68
7.2.1 Basic types - Bounded and unbounded, correlated and uncorrelated 68
7.2.2 Unbounded (definition, concept, quantitative description) 70
7.2.3 Bounded (definition, concept, quantitative description) 70
7.2.3.1 Overview 70
7.2.3.2 Duty cycle distortion (correlated). 70
7.2.3.3 Data dependent (correlated) 70
7.2.3.3 1 Overview 70
7.2.3.3 2 Dispersion induced jitter 71
7.2.3.3 3 Reflection induced jitter 71
7.2.3.3 4 Baseline wander induced jitter. 71
7.2.3.3 5 High probability DDJ 71
7.2.3.3 6 Low probability DDJ. 71
7.2.3.4 Uncorrelated DJ 71
7.2.3.4 1 Overview 71
7.2.3.4 2 Power supply noise 72
7.2.3.4 3 Crosstalk / external noise 72
7.2.3.4 4 Applied sinusoidal 72
7.2.4 Residual jitter and variance record 72
7.2.5 Summary of jitter taxonomy 73
8 Calculation of jitter compliance values (level 1) 73
8.1 Overview - Separation of jitter components 73
8.2 Examples comparing level 1 DJ with peak-to-peak DJ 75
8.3 Methodology details for calculating level 1 DJ and level 1 TJ 78
9 Basic data forms, analysis and separation of jitter components 79
9.1 Overview 79
9.1.1 Introduction 79
9.1.2 Basic data forms 79
9.1.3 Data analysis methods 79
9.1.4 Summary of overview 80
9.1.5 Organization of the document relating to material introduced in clause 9. 82
9.2 Best fit of tails of histograms 82
9.2.1 Introduction 82
9.2.2 Tail fit jitter analysis method example 84
9.2.2.1 Jitter separation through tail fit 84
9.2.2.2 Tail fit accuracy 85
9.2.2.3 Tail fit application in serial data communication 86
9.2.2.4 DJ and RJ measurement (level 2). 87
9.2.2.5 Level 1 CDF measurement 87
9.3 Frequency spectrum method 88
10 Signal quality measurement methodologies 89
10.1 Overview 89
10.1.1 Non-jitter properties of signal quality 89
10.1.2 Overview of jitter related signal quality measurement methods 89
10.1.3 Accuracy and verification considerations 90
10.1.3.1 Accuracy 90

Copyright International Organization for Standardization
Provided by IHS under license with ISO
No reproduction or networking permitted without license from IHS Not for Resale

10.1.3.2 Verification . . . 90
10.1.3.2 1 Overview . . . 90
10.1.3.2 2 BERT method . . . 90
10.1.3.2 3 Calibrated signal source method . . . 90
10.1.4 Summary of signal quality measurement methods . . . 91
10.2 Equivalent time oscilloscope methods . . . 94
10.2.1 Introduction . . . 94
10.2.2 Equivalent time sampling . . . 95
10.2.2.1 Overview . . . 95
10.2.2.2 Asychronous equivalent time sampling . . . 96
10.2.2.3 Sequential equivalent time sampling . . . 96
10.2.3 Waveform eye mask measurements . . . 97
10.2.4 Repeated pattern measurement using an equivalent time oscilloscope . . . 98
10.3 Enhanced equivalent time oscilloscope . . . 99
10.3.1 Overview . . . 99
10.3.2 Signal edge models . . . 100
10.3.3 Periodic jitter frequency analysis beyond the Nyquist rate . . . 100
10.3.4 General process for extracting the CDF . . . 101
10.3.4.1 Overview . . . 101
10.3.4.2 Correlated Jitter . . . 101
10.3.4.3 Uncorrelated Jitter . . . 101
10.3.4.4 Aggregate Deterministic Jitter (DJ) . . . 102
10.3.5 Level 1 CDF output . . . 102
10.4 BERT scan . . . 103
10.4.1 Basic BERT scan . . . 103
10.4.2 Alternate combined process to extract level 1 DJ and TJ . . . 104
10.4.3 BERT eye contour measurements . . . 105
10.4.4 BERT with reference channel . . . 106
10.5 Time interval analysis . . . 107
10.5.1 Introduction . . . 107
10.5.2 Jitter measurements with a “bit clock” (level 1) . . . 108
10.5.3 Jitter measurements with a “pattern marker” (level 1) . . . 109
10.5.4 Jitter measurements with ‘no clock and no marker’ (level 2) . . . 113
10.5.4.1 Overview . . . 113
10.5.4.2 TIA data reduction procedure . . . 115
10.5.4.3 Total jitter calculation . . . 116
10.5.4.4 Data dependent jitter measurement (level 2) . . . 116
10.5.5 Power density spectrum of jitter (level 2) . . . 118
10.6 Real time oscilloscope methods . . . 120
10.6.1 Overview . . . 120
10.6.2 Clock recovery and waveform eye diagram . . . 121
10.6.3 Spectrum approach to jitter measurements . . . 122
10.6.3.1 Overview . . . 122
10.6.3.2 RJ/DJ analysis (level 2) . . . 123
10.6.3.3 Analyzing DJ components (level 2) . . . 123
10.6.3.4 Obtaining the jitter eye opening . . . 124
10.6.3.5 Deterministic jitter and total jitter (level 1) . . . 124
10.6.3.6 Jitter eye diagram . . . 125
10.6.4 Jitter noise floor of RT scope oscilloscope waveform data . . . 125
11 Jitter / signal tolerance measurement methodologies . . . 125
11.1 Overview . . . 125
11.2 Jitter tolerance test methodologies . . . 127
11.2.1 Overview . . . 127
11.2.2 General methodology . . . 127
11.2.3 Sinusoidal jitter modulation . . . 128
11.2.4 Jitter / signal tolerance sources . . . 128
11.2.4.1 Overview . . . 128

--`,,```,,,,````-`-`,,`,,`,`,,`---

Copyright International Organization for Standardization
Provided by IHS under license with ISO
No reproduction or networking permitted without license from IHS Not for Resale

11.2.4.2 Optical jitter / signal tolerance source example . . . 130
11.2.4.3 Electrical jitter / signal tolerance source example . . . 131
11.2.5 Calibration of a jitter tolerance signal source . . . 131
11.2.6 Direct time synthesis . . . 132
11.2.7 BER measurements . . . 132
12 Example use of jitter specification methodology for FC-PI-n . . . 133
12.1 Overview . . . 133
12.2 Dependence on signal properties other than jitter output at the average signal level . . . 133
12.3 Jitter output budget and jitter tolerance budget . . . 134
12.3.1 Overview . . . 134
12.3.2 Example jitter output budget tables . . . 134
12.3.3 Jitter tolerance specification . . . 134
13 Practical measurements . . . 135
13.1 Level 1 and level 2 measurements . . . 135
13.2 System considerations . . . 136
13.3 Component considerations . . . 137
13.4 Instrumentation considerations . . . 138
13.4.1 General . . . 138
13.4.2 FC compliant . . . 138
13.4.3 Non-FC compliant . . . 138
13.5 Reference standards / calibration considerations . . . 138
13.6 Test fixture compensation and calibration issues . . . 139
13.6.1 Overview . . . 139
13.6.2 Compensating and non-compensating test fixtures . . . 139
13.6.3 Detection and correction of test fixture degradation effects . . . 139
13.6.4 Correction for golden test fixture effects . . . 140
13.6.5 Connector type adapters . . . 140
13.7 Data output format considerations . . . 141
14 Detailed implementation examples . . . 142
14.1 TIA for optical gamma T at switching threshold for FC Ports . . . 142
14.1.1 Overview of measurement and strategy . . . 142
14.1.2 Test fixtures and measurement equipment . . . 143
14.1.3 Option 1 - optical TIA no clock, no marker . . . 144
14.1.3.1 Option 1 overview . . . 144
14.1.3.2 Option 1 test fixture . . . 144
14.1.3.3 Option 1 measurement equipment . . . 144
14.1.3.4 Option 1 calibration . . . 146
14.1.3.5 Option 1 measurement procedure . . . 146
14.1.3.6 Option 1 data output format . . . 147
14.1.3.7 Option 1 acceptable values . . . 148
14.1.4 Option 2 - TIA with Golden PLL bit clock . . . 149
14.1.4.1 Option 2 overview . . . 149
14.1.4.2 Option 2 test fixture . . . 149
14.1.4.3 Option 2 measurement equipment . . . 149
14.1.4.4 Option 2 calibration procedure . . . 149
14.1.4.5 Option 2 measurement procedure . . . 149
14.1.5 Option 2 data output format . . . 150
14.1.5.1 Option 2 acceptable values . . . 153
14.1.6 Option 3 - TIA with arming on bit sequence . . . 153
14.1.6.1 Option 3 overview . . . 153
14.1.6.2 Option 3 test fixture . . . 154
14.1.6.3 Option 3 measurement equipment . . . 154
14.1.6.4 Option 3 calibration procedure . . . 154
14.1.6.5 Option 3 measurement procedure . . . 154
14.1.6.6 Option 3 data output format . . . 155
14.1.6.7 Option 3 acceptable values . . . 156
14.2 Electrical Gamma T using a real time oscilloscope . . . 156

Copyright International Organization for Standardization
Provided by IHS under license with ISO
No reproduction or networking permitted without license from IHS
Not for Resale

14.2.1 Overview . . . 156
14.2.2 Test Fixture and termination . . . 156
14.2.3 Measurement Equipment . . . 157
14.2.4 Measurement Procedure . . . 158
14.2.5 Measurement results . . . 159
14.3 Optical and electrical Gamma T using a jitter optimized sampling oscilloscope . . . 160
14.3.1 Overview . . . 160
14.3.2 Measurement configuration . . . 160
14.3.3 Measurement equipment . . . 162
14.3.4 Measurement procedure . . . 162
14.3.5 Measurement results . . . 163
14.3.5.1 Electrical Gamma T results at 2,125 Gbit/s. . . . 163
14.3.5.2 Optical Gamma T results at 10,518 75 Gbit/s . . . 164
14.4 BERT Delta R signal tolerance . . . 165
14.4.1 Overview . . . 165
14.4.2 Measurement configuration for signal calibration . . . 165
14.4.3 Calibration test fixtures . . . 166
14.4.4 Signal calibration procedure . . . 166
14.4.4.1 Initial DDJ calibration . . . 166
14.4.4.2 Initial RJ calibration . . . 166
14.4.4.3 SJ (sine jitter) calibration . . . 166
14.4.4.4 Final DJ and TJ calibration . . . 167
14.4.4.5 Eye amplitude calibration . . . 168
14.4.4.6 Add SJ. . . . 168
14.4.5 Signal tolerance testing . . . 168
14.4.6 Data output format . . . 168
14.4.7 Acceptable values . . . 169
Annex A - (informative) **Test bit sequences** . . . 170
A.1 Test bit sequence characteristics . . . 170
A.1.1 Introduction . . . 170
A.1.2 Low-frequency pattern . . . 171
A.1.3 Low-transition density patterns . . . 173
A.1.3.1 Overview . . . 173
A.1.3.2 Half-rate and quarter-rate square patterns . . . 174
A.1.3.3 Ten contiguous runs of 3 . . . 175
A.1.4 Composite patterns . . . 176
A.2 Compliant jitter test bit sequences . . . 176
A.2.1 Introduction . . . 176
A.2.2 Random test bit sequence . . . 177
A.2.2.1 Overview . . . 177
A.2.2.2 Background - Fibre Channel frame . . . 177
A.2.2.3 Original RPAT . . . 178
A.2.2.4 Compliant RPAT (CRPAT) . . . 178
A.2.3 Compliant receive jitter test bit sequences . . . 181
A.2.3.1 Overview . . . 181
A.2.3.2 Receive jitter tolerance pattern - JTPAT . . . 181
A.2.3.3 Compliant receive jitter tolerance pattern - CJTPAT . . . 182
A.2.4 Supply noise test bit sequences . . . 184
A.2.4.1 Overview . . . 184
A.2.4.2 Supply noise pattern - SPAT . . . 184
A.2.4.3 Compliant supply noise pattern - CSPAT . . . 184
A.3 Practical issues with compliant patterns in operating FC systems . . . 185
Annex B - (informative) **Practical measurements** . . . 187
B.1 Introduction . . . 187
B.2 Basic architecture . . . 187
B.3 Instrumentation interface adapters . . . 188
B.3.1 Overview . . . 188

Copyright International Organization for Standardization
Provided by IHS under license with ISO
No reproduction or networking permitted without license from IHS
Not for Resale

B.3.2 Balanced copper . . . 189
B.3.2.1 Introduction . . . 189
B.3.2.2 Source and sink adapters for balanced copper variants . . . 190
B.3.2.2.1 Balanced - unbalanced . . . 190
B.3.2.2.2 Balanced - balanced (alternative 1) . . . 191
B.3.2.2.3 Balanced - balanced (alternative 2) . . . 192
B.3.2.3 Tap adapters for balanced copper variants . . . 193
B.3.2.3.1 Balanced-balanced (alternative 1) . . . 193
B.3.2.3.2 Balanced - balanced (alternative 2) . . . 195
B.3.2.3.3 Balanced-unbalanced . . . 196
B.3.2.4 Extracting a balanced trigger signal . . . 197
B.3.3 Unbalanced copper . . . 198
B.3.3.1 Overview . . . 198
B.3.3.2 Source and sink adapters for unbalanced copper variants (alternative 1) . . . 198
B.3.3.3 Source and sink adapters for unbalanced copper variants (alternative 2) . . . 199
B.3.3.4 Tap adapters for unbalanced copper variants (alternative 1) . . . 199
B.3.3.5 Tap adapters for unbalanced copper variants (alternative 2) . . . 201
B.3.4 Optical . . . 201
B.3.4.1 Overview . . . 201
B.3.4.2 Source interface adapters . . . 201
B.3.4.3 Sink interface adapter . . . 202
B.3.4.4 Optical tap . . . 203
B.3.5 Specific tests . . . 203
B.3.6 Description of baluns . . . 204
B.3.6.1 Overview . . . 204
B.3.6.2 Balun requirements . . . 205
B.3.6.2.1 Overview . . . 205
B.3.6.2.2 Core and transmission-line requirements . . . 206
B.3.6.3 Specific wound core construction details . . . 206
B.3.6.3.1 Overview . . . 206
B.3.6.3.2 Alternative 1 - wound toroid construction . . . 206
B.3.6.3.3 Alternative 2 - wound toroid construction . . . 207
B.3.6.3.4 Alternative 3 - wound bead construction . . . 207
B.3.6.4 Connection of wound cores into baluns . . . 208
B.3.6.5 Other source/sink adapter components . . . 208
Annex C - (informative) **Choosing the corner frequency: fc / 1 667** . . . 209
C.1 Overview . . . 209
Annex D - (informative) **Extrapolation to low-probability CDF levels** . . . 212
D.1 Introduction . . . 212
D.2 Effects of DJ calculation and encoding scheme . . . 212
D.3 Example extrapolations . . . 213
D.4 Relationship to data pattern . . . 218
D.5 Summary . . . 218
Annex E - (informative) **Frequency domain measurement (spectrum analyzer)** . . . 219
E.1 Overview . . . 219
E.2 Frequency domain measurement algorithm . . . 220
Annex F - (informative) **Positioning of jitter eye mask relative to the data** . . . 222
F.1 Introduction . . . 222
F.2 Peak-to-peak vs mean . . . 222
F.3 Restrictions on jitter distributions . . . 223
F.4 Jitter tolerance and jitter output issues . . . 223
F.5 Special consideration for optical delta T points . . . 224
F.6 Summary . . . 224
Annex G - (informative) **Crosstalk jitter components** . . . 225
G.1 Overview . . . 225
G.2 Equipment set-up . . . 225
G.3 Measurement set-up . . . 226

Copyright International Organization for Standardization
Provided by IHS under license with ISO
No reproduction or networking permitted without license from IHS Not for Resale

G.4 Results for test 1 (zero crosstalk added) . . . 226
G.5 Results for test 2: (50mV of crosstalk added) . . . 228
G.6 Results for test 3: (100mV of crosstalk added) . . . 230
G.7 Combined results . . . 231
G.8 Conclusions . . . 233
Annex H - (informative) **Developing a signal budget at connectors** . . . 235
H.1 Introduction . . . 235
H.2 Physical architecture . . . 235
H.3 Options for connectors other than Gamma . . . 235
H.4 Determining the budgets when using a compliance interconnect methodology . . . 236
15 Bibliography . . . 239

Copyright International Organization for Standardization
Provided by IHS under license with ISO
No reproduction or networking permitted without license from IHS
Not for Resale

Figure 1 - Drawing conventions . . . 18
Figure 2 - PLL response . . . 27
Figure 3 - Mask of the sinusoidal component of jitter tolerance - Log-Log Plot . . . 28
Figure 4 - Waveform eye diagrams from different jitter distributions . . . 30
Figure 5 - FC-0 transmitter interface . . . 33
Figure 6 - FC-0 receiver interface . . . 33
Figure 7 - Fibre channel fabric link . . . 34
Figure 8 - Example fibre channel link storage system implementation . . . 35
Figure 9 - Interoperability points examples at connectors . . . 36
Figure 10 - Noise and jitter in the same portion of the signal . . . 38
Figure 11 - Example of multiple events within the same bit time . . . 40
Figure 12 - Signals crossing a threshold level at different times . . . 42
Figure 13 - Probability of signal event errors from adjacent signal transitions . . . 43
Figure 14 - Jitter eye diagram statistics, linear scale . . . 45
Figure 15 - Jitter eye diagram statistics, log scale . . . 45
Figure 16 - Jitter eye diagram statistics pure Gaussian different sigmas . . . 46
Figure 17 - Jitter eye diagram statistics, dual-Dirac function . . . 47
Figure 18 - Jitter eye diagram statistics, increased RJ . . . 48
Figure 19 - Various combinations of DJ and RJ . . . 48
Figure 20 - General form for the CDF bathtub curve at the specified signal level . . . 49
Figure 21 - Relationship of a jitter eye mask to a family of limiting bathtub curves . . . 50
Figure 22 - General form of a jitter eye mask used for signal quality specification . . . 51
Figure 23 - Example of an eye contour with a jitter eye mask . . . 52
Figure 24 - Practical example using a TIA at three different signal levels . . . 53
Figure 25 - Block diagram for a serial receiver with clock and data recovery . . . 54
Figure 26 - A typical PLL phase modulation frequency tracking response . . . 54
Figure 27 - Schematic of a basic measurement system . . . 55
Figure 28 - Phase modulation frequency response of the time difference function . . . 56
Figure 29 - Single pole low-pass filter passband characteristic for a Golden PLL . . . 57
Figure 30 - Example of DJ effects caused by rapid transition density changes in CJTPAT . . . 58
Figure 31 - Golden PLL delay property . . . 62
Figure 32 - Measurement set-up for evaluating transmitters . . . 65
Figure 33 - Measurement set-up for evaluating receivers . . . 67
Figure 34 - Taxonomy of jitter terminology and relationships . . . 73
Figure 35 - The two step process for calculating level 1 DJ and TJ . . . 74
Figure 36 - Three different DJ PDFs used to create CDF's in figure 37 . . . 75
Figure 37 - CDFs and associated level 1 DJ values from PDFs in figure 36 . . . 76
Figure 38 - Real data comparisons using PDFs . . . 77
Figure 39 - Real data comparisons using CDFs . . . 77
Figure 40 - Histogram of a set of jitter events . . . 83
Figure 41 - Schematic drawing of the total jitter histogram in the presence of DJ and RJ . . . 84
Figure 42 - Accuracy simulation for tail fit with a "noisy" total jitter histogram . . . 85
Figure 43 - Set-up schematic for jitter output measurement. . . . 86
Figure 44 - Waveforms of CRPAT data and the recovered bit clock . . . 86
Figure 45 - Total jitter histogram measured with a Golden PLL clock as the reference . . . 87
Figure 46 - Level 1 CDF "bathtub curve" for the PDFs in figure 45 . . . 88
Figure 47 - Time domain jitter output test (Golden PLL) . . . 96
Figure 48 - Asychronous ET sampling . . . 96
Figure 49 - Sequential ET sampling . . . 97
Figure 50 - Waveform eye mask . . . 97
Figure 51 - Repeated pattern measurements using a sampling oscilloscope . . . 98
Figure 52 - BERT Scan signal quality measurement . . . 103
Figure 53 - Example of eye contour measurement and waveform eye . . . 106
Figure 54 - An example of time interval analysis for jitter spectrum output measurement . . . 107
Figure 55 - Data jitter histogram (PDF) measured and referenced to a bit clock . . . 108

--`,,```,,,,````-`-`,,`,,`,`,,`---

Copyright International Organization for Standardization
Provided by IHS under license with ISO
No reproduction or networking permitted without license from IHS Not for Resale

Figure 56 - BER/CDF function corresponding to jitter PDF in figure 55 . . . 109
Figure 57 - Measurement setup for “known pattern with marker” . . . 110
Figure 58 - Correlated DJ distribution as a function of bit number . . . 111
Figure 59 - Power spectrum density (PSD) function of PJ and RJ . . . 111
Figure 60 - BER/CDF function measured with “known pattern with marker method” . . . 112
Figure 61 - Setup for TIA measurement without an external timing reference signal . . . 113
Figure 62 - Correlated DJ histogram measurement . . . 114
Figure 63 - BER/CDF function measured without an external timing reference . . . 114
Figure 64 - Histogram of raw TIA data . . . 115
Figure 65 - Histogram of reduced TIA data (multiples of UI removed) . . . 115
Figure 66 - Background on the 2 versus sqrt (2) issue . . . 116
Figure 67 - Portion of two alternating disparity K28.5 characters and resulting waveform eye . . . 117
Figure 68 - Distribution of jitter measured by TIA . . . 118
Figure 69 - Real-time acquisition, analysis and display . . . 120
Figure 70 - Real-Time (RT) sampling (single trigger event) . . . 120
Figure 71 - Fibre Channel IDLE sequence . . . 121
Figure 72 - Recovered clock, TIE trend and waveform eye diagram . . . 122
Figure 73 - Frequency spectrum of time interval error (TIE) . . . 123
Figure 74 - Jitter analysis bathtub curve . . . 124
Figure 75 - General methodology for jitter / signal tolerance measurements . . . 128
Figure 76 - Sinusoidal jitter modulation . . . 128
Figure 77 - Example of an optical signal tolerance source . . . 130
Figure 78 - Example of an electrical signal tolerance source . . . 131
Figure 79 - Direct time synthesis jitter tolerance test setup for a 10 bit deserializer . . . 132
Figure 80 - General allowed range calibration strategy . . . 139
Figure 81 - Compensating degradation calibration strategy . . . 140
Figure 82 - Use of passive adapters as part of the optical test fixture . . . 141
Figure 83 - Physical location of Gamma points (in a GBIC example) . . . 143
Figure 84 - Test fixture and basic test configuration . . . 144
Figure 85 - Option 1 measurement equipment detail . . . 145
Figure 86 - Option 1 measurement setup . . . 147
Figure 87 - Data output format for Option 1 measurement . . . 148
Figure 88 - Summary for Option 1 measurement . . . 148
Figure 89 - Configuration for option 2 measurements . . . 149
Figure 90 - Option 2 measurement setup . . . 150
Figure 91 - Option 2 data output format rendition 1 - histogram . . . 151
Figure 92 - Option 2 data output format rendition 2 - bathtub curve . . . 152
Figure 93 - Option 2 data output format rendition 3 - Summary statistics . . . 153
Figure 94 - Option 3 configuration . . . 153
Figure 95 - Option 3 measurement configuration . . . 154
Figure 96 - Option 3 data output format rendition 1 - Bathtub curve . . . 155
Figure 97 - Option 3 data output format rendition 2 - Summary . . . 156
Figure 98 - Test fixture and termination Option 1 . . . 157
Figure 99 - Test fixture and termination Option 2 . . . 157
Figure 100 - Real time waveform display . . . 158
Figure 101 - Controls for setting the measurement and analysis parameters . . . 159
Figure 102 - Measurement results . . . 159
Figure 103 - Reference clock trigger configuration for optical DUT . . . 160
Figure 104 - Golden PLL trigger configuration . . . 161
Figure 105 - Reference clock trigger configuration for electrical DUT . . . 161
Figure 106 - PLL trigger configuration . . . 162
Figure 107 - CJTPAT Electrical Gamma T results . . . 163
Figure 108 - Electrical Gamma T CRPAT results . . . 163
Figure 109 - Electrical Gamma T CSPAT results . . . 164
Figure 110 - Optical gamma T at 10,518 75 Gbit/s . . . 164
Figure 111 - Measurement configuration for signal calibration . . . 165
Figure 112 - Final BERT scan results . . . 167

Copyright International Organization for Standardization
Provided by IHS under license with ISO
No reproduction or networking permitted without license from IHS
Not for Resale

Figure 113 - Example of an automated BERT scan similar to figure 112 . . . 169
Figure A.1 - 8B/10B code trellis diagram . . . 171
Figure A.2 - FFT of original RPAT . . . 179
Figure A.3 - FFT of compliant RPAT . . . 179
Figure B.1 - Ideal test configuration architecture . . . 187
Figure B.2 - Placement of adapters in test configurations . . . 189
Figure B.3 - Source/sink interface adapter matching network . . . 190
Figure B.4 - Balanced-balanced source-sink adapter (alternative 1) . . . 192
Figure B.5 - Half of balanced-balanced source-sink adapter (alternative 2) . . . 193
Figure B.6 - Tap adapter matching network (balanced-balanced) . . . 194
Figure B.7 - Half of balanced-balanced tap adapter (alternative 2) . . . 195
Figure B.8 - Balanced-unbalanced tap adapter configuration . . . 197
Figure B.9 - Extracting a balanced trigger for a single-ended instrument . . . 198
Figure B.10 - Source/sink interface adapter matching network for unbal - unbal copper . . . 199
Figure B.11 - Unbalanced-unbalanced copper tap adapter . . . 200
Figure B.12 - Basic optical system . . . 201
Figure B.13 - Source interface adapter . . . 202
Figure B.14 - Sink interface adapter . . . 202
Figure B.15 - Optical tap adapter . . . 203
Figure B.16 - Source/sink adapter - schematic plus assembly view . . . 205
Figure C.1 - Tolerance mask asymptotes for 1 062,5 MBd . . . 210
Figure C.2 - Comparison of low-frequency clock jitter and tolerance mask . . . 211
Figure D.1 - 32 000 bit data pattern results . . . 213
Figure D.2 - 32 000 bit data pattern results . . . 214
Figure DD.3 - 32 000 bit data pattern results . . . 214
Figure D.4 - 32 000 bit data pattern results . . . 215
Figure D.5 - 10 000 000 bit data pattern results . . . 215
Figure D.6 - 10 000 000 bit data pattern results . . . 216
Figure D.7 - 10 000 000 bit data pattern results . . . 216
Figure D.8 - 10 000 000 bit data pattern results . . . 217
Figure D.9 - 10 000 000 bit data pattern results . . . 217
Figure D.10 - Example 1 jitter distribution versus data pattern . . . 218
Figure D.11 - Example 2 (more loss) jitter distribution versus data pattern . . . 218
Figure E.1 - Representative spectrum analyzer plot . . . 219
Figure E.2 - Frequency domain test setup (spectrum analyzer) . . . 219
Figure F.1 - Examples of jitter distributions . . . 223
Figure G.1 - Equipment setup . . . 225
Figure G.2 - Voltage versus time output of FC test board . . . 227
Figure G.3 - Clock to data transfer characteristic . . . 227
Figure G.4 - Distribution of the rising edges with no crosstalk . . . 228
Figure G.5 - Output of FC test board with 50 mV crosstalk added . . . 228
Figure G.6 - Jitter distributions for the rising and falling edges . . . 229
Figure G.7 - Same as figure G.4 with 50 mV crosstalk added . . . 229
Figure G.8 - Output of FC test board with 100 mV crosstalk added . . . 230
Figure G.9 - Jitter distributions with 100 mV crosstalk . . . 230
Figure G.10 - Same as figure G.4 with 100 mV crosstalk added . . . 231
Figure G.11 - Base line plot with zero crosstalk added . . . 231
Figure G.12 - Overlay of results with and without crosstalk added . . . 232
Figure G.13 - Correlation between CDFs from three methods . . . 233
Figure H.1 - One end of a duplex link with added connector . . . 235
Figure H.2 - Signal budgeting options . . . 236
Figure H.3 - Compliance interconnect mask to accommodate the Alpha T to Gamma T loss . . . 237
Figure H.4 - Adjusting the Alpha R mask to accommodate the Gamma R to Alpha R loss . . . 238

Copyright International Organization for Standardization
Provided by IHS under license with ISO
No reproduction or networking permitted without license from IHS Not for Resale

Table 1 - Input characteristics for a Golden PLL . . . 59
Table 2 - Output characteristics for a Golden PLL . . . 60
Table 3 - Jitter transfer characteristics for a Golden PLL . . . 61
Table 4 - Signal quality contribution elements . . . 69
Table 5 - Comparison of basic data forms and analysis methods . . . 80
Table 6 - Signal quality measurement method summary comparison . . . 91
Table 7 - Jitter tolerance components . . . 126
Table 8 - 4,25 GBd jitter output budget example . . . 135
Table 9 - 4,25 GBd jitter tolerance budget example . . . 136
Table A.1 - Eye closure penalties for low-frequency pattern with n=12 . . . 172
Table A.2 - Low-frequency pattern . . . 173
Table A.3 - Low-transition density pattern . . . 174
Table A.4 - Half-rate and quarter-rate patterns - see text . . . 175
Table A.5 - Ten runs of 3 assuming positive disparity . . . 176
Table A.6 - Ten runs of 3 assuming negative disparity . . . 176
Table A.7 - Fibre Channel frame . . . 177
Table A.8 - Valid fibre channel frame delimiters . . . 177
Table A.9 - CRPAT test bit sequence . . . 180
Table A.10 - JTPAT . . . 182
Table A.11 - CJTPAT . . . 182
Table A.12 - Supply noise test bit sequence . . . 184
Table A.13 - Compliant supply noise test bit sequence . . . 185
Table B.1 - Ideal transfer function for source/sink adapter matching network of figure B.3 . . . 191
Table B.2 - Transfer function for alternative 1 balanced - balanced source/sink network of figure B.4 . 192
Table B.3 - Transfer function for balanced - balanced source/sink interface network of figure B.5 193
Table B.4 - Transfer function for balanced - balanced tap adapter of figure B.6 . . . 194
Table B.5 - Ideal transfer function for balanced - balanced tap adapter of figure B.7 . . . 196
Table B.6 - Ideal transfer function for unbalanced - unbalanced copper adapter of figure B.10 . . . 199
Table B.7 - Ideal transfer function for unbalanced - unbalanced copper tap adapter of figure B.11 . . . 200
Table B.8 - Sample test configuration specifications . . . 204
Table E.1 - Frequency domain conversion . . . 220
Table E.2 - Frequency domain conversion . . . 221

Copyright International Organization for Standardization
Provided by IHS under license with ISO
No reproduction or networking permitted without license from IHS
Not for Resale

INFORMATION TECHNOLOGY – FIBRE CHANNEL –

Part 117: Methodologies for jitter and signal quality (MJSQ)

FOREWORD

1) ISO (International Organization for Standardization) and IEC (International Electrotechnical Commission) form the specialized system for worldwide standardization. National bodies that are members of ISO or IEC participate in the development of International Standards. Their preparation is entrusted to technical committees; any ISO and IEC member body interested in the subject dealt with may participate in this preparatory work. International governmental and non-governmental organizations liaising with ISO and IEC also participate in this preparation.

2) In the field of information technology, ISO and IEC have established a joint technical committee, ISO/IEC JTC 1. Draft International Standards adopted by the joint technical committee are circulated to national bodies for voting. Publication as an International Standard requires approval by at least 75 % of the national bodies casting a vote.

3) The formal decisions or agreements of IEC and ISO on technical matters express, as nearly as possible, an international consensus of opinion on the relevant subjects since each technical committee has representation from all interested IEC and ISO member bodies.

4) IEC, ISO and ISO/IEC publications have the form of recommendations for international use and are accepted by IEC and ISO member bodies in that sense. While all reasonable efforts are made to ensure that the technical content of IEC, ISO and ISO/IEC publications is accurate, IEC or ISO cannot be held responsible for the way in which they are used or for any misinterpretation by any end user.

5) In order to promote international uniformity, IEC and ISO member bodies undertake to apply IEC, ISO and ISO/IEC publications transparently to the maximum extent possible in their national and regional publications. Any divergence between any ISO/IEC publication and the corresponding national or regional publication should be clearly indicated in the latter.

6) ISO and IEC provide no marking procedure to indicate their approval and cannot be rendered responsible for any equipment declared to be in conformity with an ISO/IEC publication.

7) All users should ensure that they have the latest edition of this publication.

8) No liability shall attach to IEC or ISO or its directors, employees, servants or agents including individual experts and members of their technical committees and IEC or ISO member bodies for any personal injury, property damage or other damage of any nature whatsoever, whether direct or indirect, or for costs (including legal fees) and expenses arising out of the publication of, use of, or reliance upon, this ISO/IEC publication or any other IEC, ISO or ISO/IEC publications.

9) Attention is drawn to the reference documents cited in this publication. Use of the referenced publications is indispensable for the correct application of this publication.

10) Attention is drawn to the possibility that some of the elements of this Technical Report, type 3, may be the subject of patent rights. ISO and IEC shall not be held responsible for identifying any or all such patent rights.

The main task of IEC and ISO technical committees is to prepare International Standards. In exceptional circumstances, ISO/IEC JTC 1 or a subcommittee may propose the publication of a technical report of one of the following types:

- type 1, when the required support cannot be obtained for the publication of an International Standard, despite repeated efforts;
- type 2, when the subject is still under technical development or where, for any other reason, there is the future but not immediate possibility of an agreement on an International Standard;
- type 3, when the technical committee has collected data of a different kind from that which is normally published as an International Standard, for example ‘state of the art’.

Technical reports of types 1 and 2 are subject to review within three years of publication to decide whether they can be transformed into International Standards. Technical reports of type 3 do not necessarily have to be reviewed until the data they provide are considered to be no longer valid or useful.

Copyright International Organization for Standardization
Provided by IHS under license with ISO
No reproduction or networking permitted without license from IHS Not for Resale

ISO/IEC TR 14165-117, which is a technical report of type 3, was prepared by subcommittee 25: Interconnection of information technology equipment, of ISO/IEC joint technical committee 1: Information technology.

This Technical Report has been approved by vote of the member bodies, and the voting results may be obtained from the address given on the second title page.

This publication has been drafted in accordance with the ISO/IEC Directives, Part 2.

--`,,```,,,,````-`-`,,`,,`,`,,`---

Copyright International Organization for Standardization
Provided by IHS under license with ISO
No reproduction or networking permitted without license from IHS Not for Resale

INFORMATION TECHNOLOGY – FIBRE CHANNEL –

Part 117: Methodologies for jitter and signal quality (MJSQ)

1 Scope

The measurement methods and specifications are intended to be used as part of a total signal performance compliance requirement set where the phase content of the signal is involved. A more generalized concept for jitter compliance testing is developed where the phase properties of the signals at signal levels other than the nominal receiver switching point are considered as well as the phase properties at the nominal receiver detection threshold. The purpose of this report is to provide background information for revising and expanding the signal specifications presently contained within the FC-PH-n, FC-PI-n, FC-100-DF-EL-S and 10GFC standards and draft standards. The MJSQ technical report is used as a basis for many of the signal specification methodologies in these documents. A further purpose is to increase the general understanding of jitter in multi-gigabaud serial transmissions for application to transports other than Fibre Channel. Documenting high speed serial signal measurement methods provides encouragement to instrument companies to create compatible measurement systems and fixturing capable of supporting 1 GBd and higher transmission rates and more generalized jitter concepts.

Although this document is optimized for use with Fibre Channel, the measurement methodologies are applicable to a broad range of serial transmission schemes.

This Technical Report applies to fully functional Fibre Channel subsystem and FC port implementations as well as to the individual components that comprise the link. This allows device and enclosure level qualification and the inclusion of system jitter contributions such as power supply noise, motor noise, crosstalk and signal rejuvenaters.

A major goal of MJSQ is to improve the relationship between measurements on signals and receiver performance in terms of bit errors.

The report adds to or extends previous work in the following areas:

a) Exposing serious implementation errors commonly found from improper use of BERT's and sampling oscilloscopes (improper use of time references and improper extraction of total jitter from sampling oscilloscopes)
b) Algorithms for separating jitter components
c) Complete specifications for executing tests including test fixtures, instrumentation specifications, calibration schemes, measurement processes and data output formats - examples for several electrical and optical applications
d) Methodology for specifying launched and received signals when pre-emphasis or receiver signal processing is used
e) Inclusion of events occurring at all signal levels within the allowed eye opening at the specified total population probability (e.g., 10^{-12})
f) Extending the receiver tolerance methodology to consider effects of different population distributions.

The MJSQ Technical Report is informative and advisory only. Certain contents of this document may be incorporated into the appropriate INCITS standards in the future.

Copyright International Organization for Standardization
Provided by IHS under license with ISO
No reproduction or networking permitted without license from IHS Not for Resale

2 Normative references

The following referenced documents are indispensable for the application of this document. For dated references, only the edition cited applies. For undated references, the latest edition of the referenced document (including any amendments) applies.

2.1 Approved references

[1] ISO/IEC 14165-115, *Information technology - Fibre channel - Part 115: Physical interfaces (FC-PI) [INCITS 352 -2002, Rev 13]*

[2] ISO/IEC 14165-116, *Information technology - Fibre channel - Part 116: 10 Gigabit fibre channel (10 GFC) [INCITS 364 -2003]*

[3] ISO/IEC 8802-3, *Information technology - Telecommunications and information exchange between systems – Local and metropolitan area networks – Specific requirements - Part 3: Carrier sense multiple access with collision detection (CSMA/CD) access method and physical layer specifications, Clause AE: Media Access Control Parameters, Physical Layer, Repeater and Management Parameters for 10 Gbit/s Operation (10 Gigabit Ethernet) [IEEE P802.3ae]*

2.2 Other references

All references in this subclause were correct at the time of approval of this Technical Report. The provisions of the referenced specifications, as identified in this subclause, are valid within the context of this Technical Report. The reference to a specification within this Technical Report does not give it any further status within ISO or IEC.

[4] ANSI INCITS 230 (R1999) - Fibre Channel - Physical and Signaling Interface (FC-PH)

[5] Synchronous Optical Network (SONET) Transport Systems: Common Criteria (GR-253-CORE, December 2005)

[6] ANSI T1.105, *Synchronous Optical Network (SONET) Basic Description Including Multiplex Structures, Rates and Formats*

[7] ANSI T1.105.06, *SONET: Physical Layer Specifications*

[8] OFSTP-4A (EIA/TIA-526-4) - Optical Eye Pattern Measurement Procedure

3 Definitions and conventions

3.1 Overview

For the purposes of this document the following acronyms, definitions, conventions and symbols apply .

3.2 Conventions

All drawings in this document conform to the conventions in figure 1.

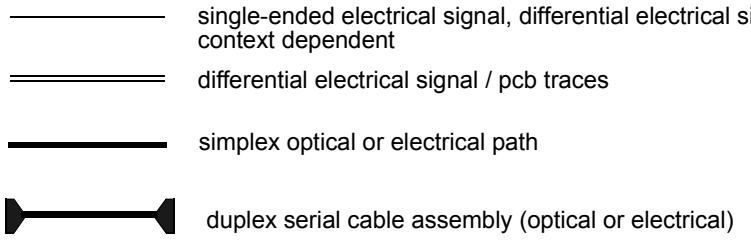

Figure 1 - Drawing conventions

Copyright International Organization for Standardization
Provided by IHS under license with ISO
No reproduction or networking permitted without license from IHS Not for Resale

In the event of conflicts between the text, tables and figures in this document, the following precedence shall be used: text, tables and figures.

Certain words and terms used in this American National Technical Report have a specific meaning beyond the normal English meaning. These words and terms are defined either in clause 3 or in the text where they first appear.

All parametric data are specified in terms of fundamental MKSA units - meters, kilograms, seconds, amperes - and their derivatives - ohms, henrys, mhos, farads, volts, coulombs, etc.

Decimals are indicated with a comma (e.g., two and one half is represented as 2,5).

Decimal numbers with more than three significant digits on either side of the decimal point are separated into groups of three digits by means of a space, for example, 2,997 924 58 x 10^8 or 1 062,5 MBd.

Units prefixed by k, M and G refer to 1E3, 1E6 and 1E9 respectively, not 2^{10}, 2^{20} and 2^{30}.

An alphanumeric list (e.g., a, b, c or A, B, C) of items indicate the items in the list are unordered.

A numeric list (e.g., 1,2,3) of items indicate the items in the list are ordered (i.e., item 1 shall occur or complete before item 2).

Bold fonts, when used in body text, indicate additional emphasis.

3.3 Keywords

Expected: anticipated to be true, assumed to exist

May: Indicates flexibility of choice with no implied preference; also means that the ability exists in the referenced topic.

Optional: Features that are not required to be implemented by this document. However, if any optional feature defined by this document is implemented, it shall be implemented as defined in this document.

Shall: Indicates a requirement for compliance to this document. Since this is a technical report there are no enforceable requirements.

Should: Indicates flexibility of choice with a preferred alternative; equivalent to the phrase “it is recommended”.

3.4 Acronyms

ARB	A specific primitive bit sequence as defined in FC-PH
BER	Bit Error Ratio
BERT	Bit Error Rate Tester
BUJ	Bounded Uncorrelated Jitter
BWJ	Baseline Wander Jitter
CDF	Cumulative Distribution Function
CDR	Clock and Data Recovery
CJTPAT	Compliant Jitter Tolerance PATtern
CRC	Cyclic Redundancy Check
CRPAT	Compliant Random PATtern
CRU	Clock Recovery Unit
CSPAT	Compliant SSO pattern
DCD	Duty Cycle Distortion
DJ	Deterministic Jitter
DDJ	Data Dependent Jitter
DIJ	Dispersion Induced Jitter

--`,,```,,,,````-`-`,,`,,`,`,,`---

Copyright International Organization for Standardization
Provided by IHS under license with ISO
No reproduction or networking permitted without license from IHS Not for Resale

DTS	Direct Time Synthesis
DUT	Device Under Test
EOF	End Of Frame; a primitive bit sequence as defined in FC-PH
EQ	EQuivalent time (OscilloScope)
ESD	Electrostatic Discharge
FC	Fibre Channel
FCS	Fibre Channel Standard
FFT	Fast Fourier Transform
FUT	fibre Under Test
HA	Host Adapter
HDD	Hard Disk Drive
IDLE	A specific primitive bit sequence as defined in FC-PH
ISI	Inter-Symbol Interference
JBOD	Just a Bunch Of Disks
JTPAT	Jitter Tolerance test PATtern
LPDDJ	Low Probability Data Dependent Jitte
MJSQ	Methodologies for Jitter and Signal Quality Specification
MM	Multi Mode (fibre)
OFSTP	Optical Fibre System Test Practice
PBC	Port Bypass Circuit
PDF	Probability Density Function
PLL	Phase Locked Loop
PMD	Physical Media Dependent sublayer
R_RDY	Receive Ready, a specific primitive bit sequence as defined in FC-PH
RBC	Recovered Byte Clock (one tenth of signaling rate as defined in 10 bit TR
RJ	Random Jitter
RIJ	Reflection Induced Jitter
RPAT	Random Pattern
RSS	Root-Sum-of-Squares
RT	Real Time (oscilloscope) or retimer (link component)
RX	Receive
SERDES	SERializer and DESerializer function. The CDR function is included in the deserializer.
SM	Single Mode (fibre)
SPAT	Simultaneous Switching Outputs (SSO) Pattern
SOF	Start Of Frame; a primitive bit sequence defined in FC-PH
SSO	Simultaneous Switching Outputs
TBC	Transmit Byte Clock
TIA	Timing Interval Analyzer
TJ	Total Jitter
TX	Transmit
UI	Unit Interval
WMV	Waveform Mask Violation (event where the allowable limits are exceeded)

3.5 Terms and definitions

3.5.1 α_T, α_R**:** Alpha T, Alpha R; reference points used for establishing signal budgets at the chip pins of the transmitter and receiver in an FC device or retiming element

3.5.2 β_T, β_R**:** Beta T, Beta R; interoperability points used for establishing signal budget at the internal connector nearest the alpha point unless the point also satisfies the definition for delta or gamma where it is either a delta or a gamma point

3.5.3 δ_T, δ_R**:** Delta T, Delta R; interoperability points used for establishing signal budget at the internal connector of a removable PMD element

3.5.4 γ_T, γ_R**:** Gamma T, Gamma R; interoperability points used for establishing signal budgets at the external enclosure connector

Copyright International Organization for Standardization
Provided by IHS under license with ISO
No reproduction or networking permitted without license from IHS Not for Resale

3.5.5 Alpha T, Alpha R: see α_T, α_R

3.5.6 attenuation: the transmission medium power loss expressed in units of dB

3.5.7 average power: the optical power measured using an average reading power meter when transmitting valid 8B/10B transmission characters

3.5.8 bandwidth: in jitter context, the corner frequency of a low-pass transmission characteristic, such as that of an optical receiver. The modal bandwidth of an optical fibre medium is expressed in units of MHz-km

3.5.9 bathtub curve: a description of the shape of a BER or CDF curve that has steep walls to a noise floor (a flat bottom) where the probability of population is small

3.5.10 baud (Bd): a unit of signalling speed, expressed as the maximum number of times per second the signal may change the state of the transmission line or other medium (Units of baud are symbols/ s)

NOTE With the Fibre Channel transmission scheme, a symbol represents a single transmission bit. [(Adapted from IEEE Std. 610.7-1995 [A16].12)].

3.5.11 Beta T, Beta R: see β_T, β_R

3.5.12 bit error ratio (BER): the probability of a correct transmitted bit being erroneously received in a communication system. For purposes of this report BER is the number of bits output from a receiver that differ from the correct transmitted bits, divided by the number of transmitted bits

3.5.13 bit clock: clock used in a jitter measurement that generates a single positive and a single negative transition per unit interval for the purpose of triggering the measuring device. Note that the bit clock frequency is twice the fundamental frequency of an alternating 1010... data stream and is equal numerically to the signalling rate expressed in baud

3.5.14 bulkhead: the boundary between the shielded system enclosure (where EMC compliance is maintained) and the external interconnect attachment

3.5.15 cable plant: all passive communications elements (e.g., optical fibre, twisted pair, coaxial cable, connectors, splices, etc.) between a transmitter and a receiver

3.5.16 clock data recovery (CDR): the function is provided by the SERDES circuitry responsible for producing a regular clock signal from the serial data and for aligning this clock to the serial data bits. The CDR uses the recovered clock to recover the data

3.5.17 character: a defined set of n contiguous bits where n is determined by the encoding scheme. For FC that uses 8b10b encoding, n = 10

3.5.18 coaxial cable: an unbalanced electrical transmission medium consisting of concentric conductors separated by a dielectric material with the dimensions and material arranged to give a specified electrical impedance

3.5.19 compliance point: an interoperability point where the interoperability specifications are met. Compliance points may include beta, gamma and delta points for transmitters and receivers

3.5.20 component: entities that make up the link. Examples are connectors, cable assemblies, transceivers, port bypass circuits and hubs

3.5.21 connector: electro-mechanical or opto-mechanical components consisting of a receptacle and a plug that provides a separable interface between two transmission media segments. Connectors may introduce physical disturbances to the transmission path due to impedance mismatch, crosstalk, etc. These disturbances may introduce jitter under certain conditions

3.5.22 coupler: a connector that mates two like media together

3.5.23 cumulative distribution function (CDF): the integral of the PDF from - infinity to a specific time or from a specific time to + infinity

3.5.24 delta function: a pulse with zero width and unity amplitude. See also Dirac delta function

Copyright International Organization for Standardization
Provided by IHS under license with ISO
No reproduction or networking permitted without license from IHS Not for Resale

3.5.25 Delta T, Delta R: see δ_T, δ_R

3.5.26 deterministic jitter, (level 1 DJ): the value returned by the calculation for DJ defined in clause 8. Any valid CDF may be used as input to this calculation. DJ used for compliance and budgeting is level 1 DJ. See also jitter, deterministic

3.5.27 Dirac delta function: a pulse with zero width and unity area. See also delta function

3.5.28 dispersion: (1) A term used to denote pulse broadening and distortion from all causes. The two causes of dispersion in optical transmissions are modal dispersion, due to the difference in the propagation velocity of the propagation modes in a multimode fibre and chromatic dispersion, due to the difference in propagation of the various spectral components of the optical source. Similar effects exist in electrical transmission lines. (2) Frequency dispersion caused by a dependence of propagation velocity on frequency, that leads to a pulse widening in a system with infinitely wide bandwidth. The term 'dispersion' when used without qualifiers refers to definition (1)

3.5.29 dual-Dirac: a pair of Dirac delta functions

3.5.30 duty cycle distortion (DCD): (1) The absolute value of one half the difference in the average pulse width of a '1' pulse or a '0' pulse and the ideal bit time in a clock-like (repeating 0,1,0,1,...) bit sequence. (2) One-half of the difference of the average width of a one and the average width of a zero in a waveform eye pattern measurement. Definition (2) contains the sign of the difference and is useful in the presence of actual data. DCD from definition (2) may be used with arbitrary data and is approximately the same quantitatively as that observed with clock like patterns in definition (1). DCD is not a level 1 quantity. DCD is considered to be correlated to the data pattern because it is synchronous with the bit edges. Mechanisms that produce DCD are not expected to change significantly with different data patterns. The observation of DCD may change with changes in the data pattern. DCD is part of the DJ distribution and is measured at the average value of the waveform

3.5.31 effective DJ: DJ used for level 1 compliance testing and determined by curve fitting a measured CDF to a cumulative or integrated dual-Dirac function, where each Dirac impulse, located at +DJ/2 and -DJ/2, is convolved with separate half-magnitude Gaussian functions with standard deviations sigma1 and sigma2. Equivalent to level 1 DJ. See clause 8

3.5.32 electrical fall time: the time interval for the falling edge of an electrical pulse to transit between specified percentages of the signal amplitude. In the context of MJSQ the measurement points are the 80 % and 20 % voltage levels

3.5.33 electrical rise time: the time interval for the rising edge of an electrical pulse to transit between specified percentages of the signal amplitude. In the context of MJSQ, the measurement points are the 20 % and 80 % voltage levels

3.5.34 enclosure: the outermost electromagnetic boundary (that acts as an EMI barrier) containing one or more FC devices

3.5.35 event: the measured deviation of a single signal edge time at a defined signal level of the signal from a reference time. The reference time is the jitter-timing-reference specified in 6.2.3. Events are also referred to as jitter events or signal events without changing the meaning. Examples include a sample in a sampling oscilloscope, a single TIA measurement, an error or non error reported by a BERT at a reference time and signal level

3.5.36 external connector: a bulkhead connector, whose purpose is to carry FC signals into and out of an enclosure, that exits the enclosure with only minor compromise to the shield effectiveness of the enclosure

3.5.37 eye contour: the locus of points in signal level - time space where the CDF = 1E-12 in the actual signal population determines whether a jitter eye mask violation has occurred. Either time jitter or signal level jitter may be used to measure the eye contour

3.5.38 FC device: an entity that contains the FC protocol functions and that has one or more of the connectors defined in this document. Examples are: host bus adapters, disk drives and switches. Devices may have internal connectors or bulkhead connectors

Copyright International Organization for Standardization
Provided by IHS under license with ISO
No reproduction or networking permitted without license from IHS Not for Resale

3.5.39 FC device connector: a connector defined in this document that carries the FC serial data signals into and out of the FC device

3.5.40 Gamma T, Gamma R: see γ_T, γ_R

3.5.41 Golden PLL: a function that conforms to the requirements in subclause 6.10.2 that extracts the jitter timing reference from the data stream under test to be used as the timing reference for the instrument used for measuring the jitter in the signal under test

3.5.42 internal connector: a connector, whose purpose is to carry the FC signals within an enclosure (may be shielded or unshielded)

3.5.43 internal FC Device: an FC device whose FC device connector is contained within an enclosure

3.5.44 Intersymbol Interference (ISI): reduction in the distinction of a pulse caused by overlapping energy from neighboring pulses. (Neighboring means close enough to have significant energy overlapping and does not imply or exclude adjacent pulses - many bit times may separate the pulses especially in the case of reflections). ISI may result in DDJ and vertical eye closure. Important mechanisms that produce ISI are dispersion, reflections and circuits that lead to baseline wander

3.5.45 jitter: the collection of instantaneous deviations of a signal edge times at a defined signal level of the signal from the reference times for those events. The reference time is the jitter-timing-reference specified in 6.2.3 that occurs under a specific set of conditions

3.5.46 jitter, baseline wander induced (BWJ): a form of DDJ that is caused by the effects of the transfer function of a of a high-pass filter circuit in the signal transmission process. Coupling circuits may cause ISI effects that produce correlated deterministic jitter

3.5.47 jitter, bounded and uncorrelated (BUJ): the part of the deterministic jitter that is not aligned in time to the HPDDJ and DCD in the data stream being measured. Sources of BUJ include, (1) power supply noise that affects the launched signal, (2) crosstalk that occurs during transmission and (3) clipped Gaussian distributions caused by properties of active circuits. BUJ usually is high population DJ, with the possible exception of power supply noise

3.5.48 jitter, data dependent (DDJ): jitter that is added when the transmission pattern is changed from a clock like to a non-clock like pattern. For example, data dependent deterministic jitter may be caused by the time differences required for the signal to arrive at the receiver threshold when starting from different places in bit sequences (symbols). DDJ is expected whenever any bit sequence has frequency components that are propagated at different rates. For example when using media that attenuates the peak amplitude of the bit sequence consisting of alternating 0,1,0,1... more than peak amplitude of the bit sequence consisting of 0,0,0,0,1,1,1,1... the time required to reach the receiver threshold with the 0,1,0,1… is less than required from the 0,0,0,0,1,1,1,1…. The run length of 4 produces a higher amplitude that takes more time to overcome when changing bit values and therefore produces a time difference compared to the run length of 1 bit sequence. When different run lengths are mixed in the same transmission the different bit sequences (symbols) therefore interfere with each other. Data dependent jitter may also be caused by reflections, ground bounce, transfer functions of coupling circuits and other mechanisms

3.5.49 jitter, deterministic (DJ): jitter with non-Gaussian probability density function. Deterministic jitter is always bounded in amplitude and has specific causes. Deterministic jitter comprises (1) correlated DJ (data dependent (DDJ) and duty cycle distortion (DCD)) and (2) DJ that is uncorrelated to the data and bounded in amplitude (BUJ). DJ is characterized by its bounded, peak-to-peak value. Level 1 DJ, see 3.5.26 and 3.5.66, is defined by an assumed CDF form and may be used for compliance testing

3.5.50 jitter, dispersion induced (DIJ): a form of DDJ that is caused by dispersion in the signal transmission process. Dispersion may cause ISI effects that produce correlated deterministic jitter

3.5.51 jitter, periodic (PJ): spectral peaks in the BUJ frequency spectrum

--`,,```,,,,````-`-`,,`,,`,`,,`---

Copyright International Organization for Standardization
Provided by IHS under license with ISO
No reproduction or networking permitted without license from IHS Not for Resale

3.5.52 jitter, reflection induced (RIJ): a form of DDJ caused by reflections in the signal transmission process. Reflections may cause ISI effects that produce correlated deterministic jitter

3.5.53 jitter, sinusiodal (SJ): single tone jitter applied during signal tolerance testing

3.5.54 jitter distribution: a general term describing either PDF or CDF properties

3.5.55 jitter eye opening (horizontal): the time interval, measured at the signal level for the measurement (commonly at the time-averaged signal level), between the 10^{-12} CDF level for the leading and trailing transitions associated with a unit interval (see figure 20 and figure 21)

3.5.56 jitter frequency: the frequency associated with the jitter waveform produced by plotting the jitter for each signal edge against bit time in a continuously running bit stream. See 6.11

3.5.57 jitter output: the quantity of jitter at a specific physical position in the link

3.5.58 jitter, random, RJ: jitter that is characterized by a Gaussian distribution and is unbounded

3.5.59 jitter, residual: jitter that remains after the DDJ and the DCD is removed

3.5.60 jitter, total, TJ: total jitter in UI is calculated from (1 - jitter eye opening) where jitter eye opening is measured in UI

3.5.61 jitter timing reference: the signal used as the basis for calculating the jitter in the signal under test. The jitter timing reference has specific requirements on its ability to track and respond to changes in the signal under test (see 6.2.3). The jitter timing reference may be different from other timing references available in the system

3.5.62 jitter transfer: the ratio as a function of jitter frequency between the jitter output and jitter input for a link element (component, device, or system) often expressed in dB. A negative dB jitter transfer indicates the element removed jitter. A positive dB jitter transfer indicates the element added jitter. A 0 dB jitter transfer indicates the element had no effect on jitter

3.5.63 jitter tolerance for links: the ability of the link downstream from the receive interoperability point (γ_r, β_r, or δ_r) to recover transmitted bits in an incoming data stream in the presence of specified jitter in the signal. Jitter tolerance is measured by the amount of jitter required to produce a specified bit error ratio. The required jitter tolerance performance depends on the frequency content of the jitter. Since detection of bit errors is required to determine the jitter tolerance, receivers embedded in an FC Ports require that the Port be capable of reporting bit errors. For receivers that are not embedded in FC Ports the bit error detection and reporting may be accomplished by instrumentation attached to the output of the receiver. Jitter tolerance is always measured using the minimum allowed signal amplitude unless otherwise specified. See also 3.5.89

3.5.64 jitter tolerance for receivers: the ability of a receiver to recover transmitted bits in an incoming data stream in the presence of specified jitter in the signal. Jitter tolerance is measured by the amount of jitter required to produce a specified bit error ratio. The reference point for the jitter tolerance of the receiver is the α_R point. The required jitter tolerance performance depends on the frequency content of the jitter. Since detection of bit errors is required to determine the jitter tolerance, receivers embedded in an FC Port require that the Port be capable of reporting bit errors. For receivers that are not embedded in an FC Port the bit error detection and reporting may be accomplished by instrumentation attached to the output of the receiver. Jitter tolerance is always measured using the minimum allowed signal amplitude unless otherwise specified. See also 3.5.89

3.5.65 level:

1. A document artifice, for example, FC-0, used to group related architectural functions. No specific correspondence is intended between levels and actual implementations.

2. In FC-PI-n context, a specific value of voltage or optical power (e.g., voltage level).

3. The type of measurement: level 1 is a measurement intended for compliance, level 2 is a measurement intended for characterization/diagnosis

Copyright International Organization for Standardization
Provided by IHS under license with ISO
No reproduction or networking permitted without license from IHS Not for Resale

3.5.66 level 1 DJ: term used in this document for the effective DJ value that is used for DJ compliance purposes

3.5.67 limiting amplifier: an active non-linear circuit with amplitude gain that keeps the output levels within specified levels, but are generally not designed to reduce jitter and may increase jitter

3.5.68 media: (1) General term referring to all the elements comprising the interconnect. This includes fibre optic cables, optical converters, electrical cables, pc boards, connectors, hubs and port bypass circuits. (2) May be used in a narrow sense to refer to the bulk cable material in cable assemblies that are not part of the connectors. Due to the multiplicity of meanings for this term its use is not encouraged

3.5.69 optical fall time: the time interval required for the falling edge of an optical pulse to transit between specified percentages of the signal amplitude. For lasers the transitions are measured between the 80 % and 20 % points

3.5.70 optical fibre: any filament or fibre, made of dielectric material, that guides light

3.5.71 optical modulation amplitude: the positive difference in power between the settled and averaged value of a long string of contiguous logic one bits and the settled and averaged value of a long string of contiguous logic zero bits. A long string for 8B10B encoding should be considered to be 5 bits high or 5 bits low

3.5.72 optical rise time: the time interval required for the rising edge of an optical pulse to transit between specified percentages of the signal amplitude. For lasers the transitions are measured between the 20 % and 80 % points

3.5.73 physical media dependent (PMD): a transmit and receive network used to launch into a specific type of electrical or optical interconnect or to receive from a specific type of electrical or optical interconnect. The details of the network design depend on the type of interconnect

3.5.74 Port (or FC Port): a generic reference to a Fibre Channel Port. In this document, the components that together form or contain the following: the FC protocol function with elasticity buffers to re-time data to a local clock, the SERDES function, the transmit and receive network and the ability to detect and report errors using the FC protocol

3.5.75 Port bypass circuit (PBC): an active multiplexer that is used to bypass FC ports or other ports that are unused or nonfunctional. PBC's that do not re-time the signals to a local clock are considered part of the interconnect

3.5.76 probability density function (PDF): a histogram of the jitter event population

3.5.77 random: random in this document always refers to Gaussian distribution. These distributions may apply to time jitter or signal level noise

3.5.78 receiver (Rx): an electronic component (Rx) that converts an analog serial input signal (optical or electrical) to an electrical (retimed or non-retimed) logic output signal

3.5.79 receive network: a receive network consists of all the elements between the interconnect connector inclusive of the connector and the deserializer or repeater chip input. This network may be as simple as a termination resistor and coupling capacitor or this network may be complex including components like photodiodes and transimpedance amplifiers

3.5.80 reclocker: a type of repeater specifically designed to modify data edge timing such that the data edges have a defined timing relation with respect to a bit clock recovered from the (FC) data at its input

3.5.81 repeater: an active circuit designed to modify the (FC) signals that pass through it by changing any or all of the following parameters of that signal: amplitude, slew rate and edge to edge timing. Repeaters have jitter transfer characteristics. Types of repeaters include retimers, reclockers and amplifiers

3.5.82 retimer (RT): a type of repeater specifically designed to modify data edge timing such that the output data edges have a defined timing relation with respect to a bit clock derived from a timing reference other than the (FC) data at its input. A retimer shall be capable of inserting and removing

Copyright International Organization for Standardization
Provided by IHS under license with ISO
No reproduction or networking permitted without license from IHS Not for Resale

words from the (FC) data passing through it. In the context of jitter methodology, a retimer resets the accumulation of jitter such that the output of a retimer has the jitter budget of alpha T

3.5.83 return loss: the ratio (expressed in dB) of incident power to reflected power, when a component or assembly is introduced into a link or system. May refer to optical power or to electrical power in a specified frequency range

3.5.84 run length: number of consecutive identical bits in the transmitted signal e.g., the pattern 0011111010 has a run lengths of five (5), one (1) and indeterminate run lengths at either end

3.5.85 running disparity: A binary parameter indicating the cumulative disparity (positive or negative) of all transmission characters since the most recent of (a) power on, (b) exiting diagnostic mode, or (c) start of frame

3.5.86 signal: the entire voltage or optical power waveforms within a data pattern during transmission

3.5.87 signal level: the instantaneous intensity of the signal measured in the units appropriate for the type of transmission used at the point of the measurement. The most common signal level unit for electrical transmissions is voltage while for optical signals the signal level or intensity is usually given in units of power: dBm and microwatts

3.5.88 signal amplitude: a property of the overall signal that describes the peak or peak-to-peak values of the signal level . When signal transitions interfere with or overlap each other in a signal the effective signal amplitude may be expressed as a vertical waveform eye opening (e. g. optical modulation amplitude)

3.5.89 signal tolerance: the ability of the link downstream from the receive interoperability point (γ_r, β_r, or δ_r) to recover transmitted bits in an incoming data stream in the presence of a specified signal. Signal tolerance is measured by the amount of jitter required to produce a specified bit error ratio at a specified signal amplitude. The required signal tolerance performance depends on the frequency content of the jitter and on the amplitude of the signal. Since detection of bit errors is required to determine the signal tolerance, receivers embedded in an FC Port require that the Port be capable of reporting bit errors. For receivers that are not embedded in an FC Port the bit error detection and reporting may be accomplished by instrumentation attached to the output of the receiver. Signal tolerance is always measured using the minimum allowed signal amplitude and maximum allowed jitter unless otherwise specified. See also jitter tolerance

3.5.90 spectral noise floor: the Fourier transform of the jitter remaining after BUJ is removed from residual jitter

3.5.91 transceiver: a transmitter and receiver combined in one package

3.5.92 transmission bit: a symbol of duration one unit interval that represents one of two logical values, 0 or 1. For example, for 8b10b encoding, one tenth of a transmission character

3.5.93 transmission character: any encoded character (valid or invalid) transmitted across a physical interface. Valid transmission characters are specified by the transmission code and include data and special characters

3.5.94 transmission code: a means of encoding data to enhance its transmission characteristics. The transmission code specified by FC-FS is byte-oriented, with both valid data bytes and special (control) codes encoded into 10-bit transmission characters

3.5.95 transmit network: a transmit network consists of all the elements between a serializer or repeater output and the connector inclusive of the connector. This network may be as simple as a pull-down resistor and ac capacitor or this network may include laser drivers and lasers

3.5.96 transmitter (Tx): a circuit (Tx) that converts a logic signal to a signal suitable for the communications media (optical or electrical)

3.5.97 TxRx connection: the complete signal path between a transmitter in one FC device and a receiver in another FC device

Copyright International Organization for Standardization
Provided by IHS under license with ISO
No reproduction or networking permitted without license from IHS Not for Resale

3.5.98 unit interval (UI): the normalized (dimensionless) nominal duration of a single transmission bit. Unit interval is a measure of time that has been normalized such that 1/Bd s is 1 UI

3.5.99 waveform mask violation, WMV: a recorded signal event where an incursion occurs into the jitter eye opening in the signal level/time space defined for a particular CDF level for the signal population. For some compliant receivers this event could produce a link bit error. Note that a maximum of one WMV event may be recorded within a single bit period. Multiple incursions into the eye opening from the same signal within the same bit time shall be counted only once. WMV's are not failures unless the number exceeds that allowed

3.5.100 word: in Fibre Channel protocol, a string of four contiguous bytes occurring on boundaries that are zero modulo 4 from a specified reference

4 Background for MJSQ

4.1 Overview

Clause 4 describes the historical background of MJS and MJSQ and some of the reasons that the original MJS technical report was produced. The concepts and terminology in this clause are more fully developed throughout MJSQ and may not be fully understood without exploring the remainder of MJSQ.

4.2 Relationship to SONET and receiver tolerance requirements

The methodologies in this document are extensions of the SONET 5, 6, 7 jitter specification concepts. In SONET the term 'network interface jitter' is used in approximately the same way as the term 'jitter' is used in this document. SONET also defines a term 'frame jitter' that is not equivalent to the term 'jitter' used in this document.

The extensions to SONET implicitly specify the assumed receiver CDR characteristic. The specification for the frequency response of the clock recovery circuit is determined by defining a jitter tolerance mask for the clock and data recovery function. Jitter occurring below the characteristic frequency is tracked and modifies the recovered clock frequency whereas jitter above the characteristic frequency is not tracked. This PLL characteristic exists for digital as well as analog (PLL-based) CDR's. Figure 2 schematically shows this tracking or frequency response characteristic. Additionally, at certain frequencies jitter peaking may occur whereby the output jitter is greater than the input jitter. It should be noted that the jitter peaking and CDR bandwidth property of some CDR's is a potential source of jitter degradation when used in repeaters within the interconnect. This document does not specify a separate requirement for jitter peaking and CDR bandwidth.

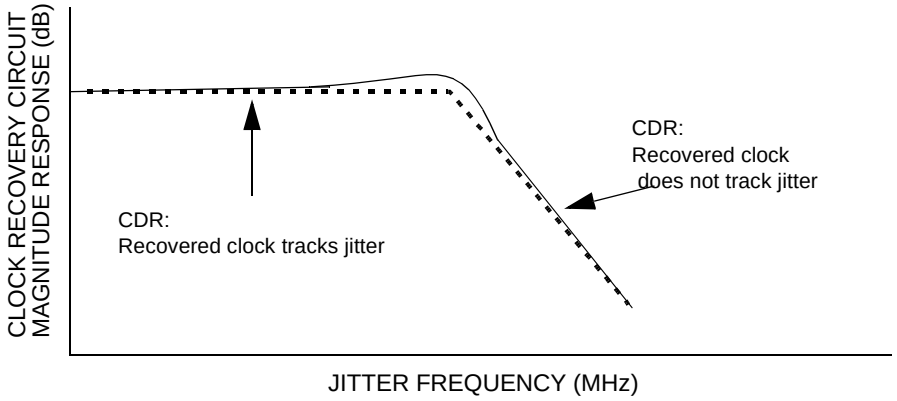

Figure 2 - PLL response

A spectral characteristic is imposed on the specification to differentiate between jitter that may be benign to a link's bit error ratio performance because of the receiver's ability to track low frequencies and jitter that is

Copyright International Organization for Standardization
Provided by IHS under license with ISO
No reproduction or networking permitted without license from IHS Not for Resale

detrimental to a link's bit error ratio performance. The jitter tolerance specification in figure 3 creates a jitter tolerance spectral requirement that is not currently specified in the FC-PH document. The implication of this specification is that jitter output specifications at all compliance points include frequency content based on the jitter tolerance mask.

When comparing this jitter specification to SONET jitter specification, the jitter tolerance masks are based on different test conditions.

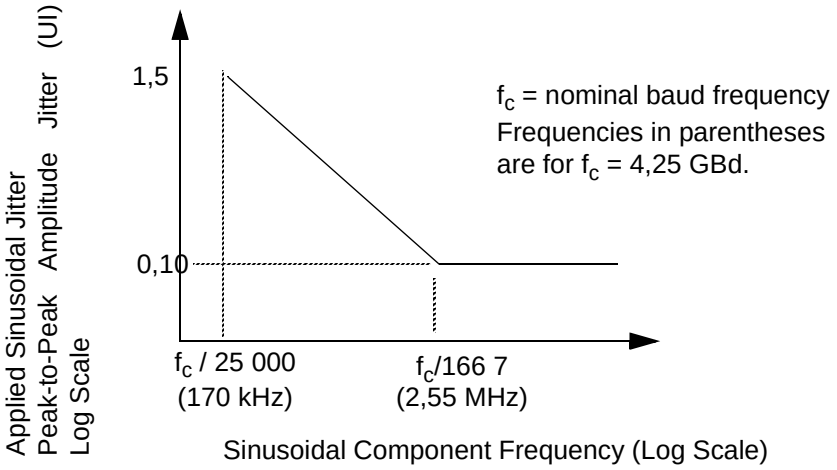

Figure 3 - Mask of the sinusoidal component of jitter tolerance - Log-Log Plot

For most receivers high-frequency jitter has greater impact on bit error ratio than low-frequency jitter because the receiver is capable of tracking the low-frequency jitter. Jitter specifications that include frequency content require additional testing; but lower systems costs may be achieved with the relaxation of the clock stability requirements.

A real example of being able to build lower cost systems by imposing the spectral characteristics to jitter relates to using lower cost reference clocks for the serializer clock multiplier PLL. Clock synthesizers are lower cost than crystal oscillators. Analysis of low-cost clock synthesizers shows an unacceptably large jitter content. Further analysis shows that most of the clock jitter is low frequency that passes unattenuated out of the optical or electrical transmitter. However, the receiver CDR reliably tracks this low-frequency jitter and recovers the data.

4.3 Relationship to earlier FC standards

The ANSI Fibre Channel specification X3.230-1994 (FC-PH) 4 only specifies measurement techniques for jitter. Two jitter generation measurement techniques are specified in X3.230-1994. One measurement is for deterministic jitter using a special Fibre Channel K28.5 pattern that contains the longest and shortest runs. The other measurement is for random jitter using a special Fibre Channel defined character, K28.7, that is a "clock-like" data sequence assumed not to contain deterministic jitter. The deterministic jitter measurement results in a peak-to-peak value and the random jitter measurement results in an RMS value. As stated in Annex J of FC-PH, the peak-to-peak value of random jitter is 14 times the RMS value for a 10^{-12} bit error ratio. Total jitter is equal to peak-to-peak random jitter plus peak-to-peak deterministic jitter.

The methodology relying on repeated K28.7 characters for measuring RJ and repeated K28.5 for measuring DJ are flawed for the following reasons:

Copyright International Organization for Standardization
Provided by IHS under license with ISO
No reproduction or networking permitted without license from IHS Not for Resale

First, the assumption that all deterministic jitter is absent in the square-wave-like K28.7 is often incorrect. For instance, deterministic sub-harmonic processes in the transmitter may show up in this measurement. Ten picoseconds of such DJ could be accounted as 14*10/2=70 pS of RJ.

Second, while the maximum and minimum run length pulses in K28.5 are ideal for measuring data-dependent jitter due to cable skin effect, this method may completely miss some components of DJ. For instance, the sub-harmonic process described above (or any jitter effect not synchronous with the K28.5 pattern) would be completely removed by averaging. Also, transmitter mistiming of any of the 5 edges out of 10 missing in K28.5 would go undiscovered.

In addition to differentiating between trackable and non-trackable jitter, a need exists to clarify the existing receiver jitter tolerance allocation indicated in Annex J of FC-PH. What is 70 % eye closure? What is this intended to test? Two CDR characteristics are important for reliable serial communication: CDR loop dynamics and CDR strobe error. These CDR characteristics become increasingly important as repeaters are used in Disk Arrays and Hubs.

Some of the features described in MJSQ are implemented in FC-PI but some significant extensions are not. MJSQ is being developed in parallel with FC-PI-2 where most extensions are implemented.

4.4 Traditional measurement methodology risks

The workhorse for evaluating signals has been the sampling oscilloscope for many years. For the properties required of high speed serial signals ordinary sampling oscilloscopes may not be suitable.

Using oscilloscope waveform eye mask methods with histogram measurements in present oscilloscope technology does not provide the statistical population required to accurately represent behavior at 10^{-12} population levels in a reasonable measurement time period. See figure 4 for examples of this issue. See also Annex A. See clause 9 for more information on different measurement methodologies. Measurements are made at the appropriate physical point in the link.

The actual signal quality may be very different at the low population levels from the appearance at high populations as seen in a typical waveform eye diagram from an oscilloscope. Figure 4 shows the waveform eyes as would result on a sampling oscilloscope from two different jitter distributions that have the same jitter eye opening at the 10^{-12} level. The distributions are taken at the nominal switching threshold level of the signals. Notice that EYE “A” seems to be considerably worse than EYE “B” but is actually equivalent in terms of its total jitter.

--`,,```,,,,````-`-`,,`,,`,`,,`---

Copyright International Organization for Standardization
Provided by IHS under license with ISO
No reproduction or networking permitted without license from IHS Not for Resale

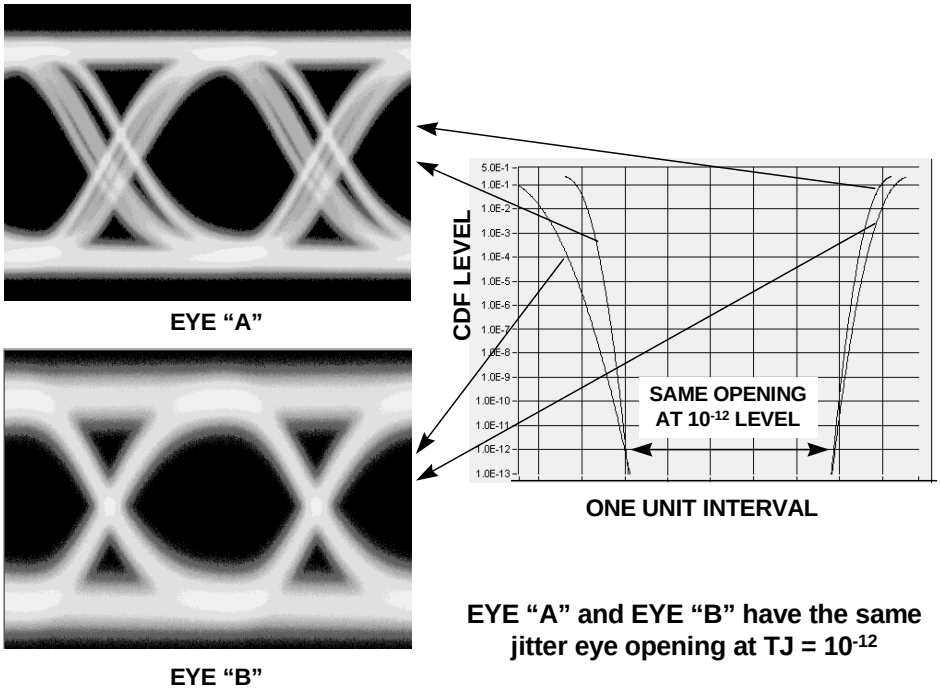

Figure 4 - Waveform eye diagrams from different jitter distributions

Traditional measurements are all recorded at the nominal receiver switching level. The most common nominal switching levels are zero differential volts for balanced electrical links and the average optical power level. Behavior at signal levels other than the nominal switching threshold is also important. For example if a signal enters the eye mask above or below the nominal switching threshold, errors may occur.

More detail concerning the important signal properties is contained in 6.2.

A signal quality measurement needs a reference time to quantify the timing properties. See 6.8.

Signal quality acceptance criteria are specified within the allowed jitter eye opening at the specified total population probability (e.g. CDF = 10^{-12}).

A major goal of MJSQ is to specify signal quality measurement methodologies that approximate more closely the observed bit error ratio of receivers.

Signal quality measurements that include results at signal levels other than the nominal switching threshold may be termed 2-dimensional or eye contour in this document.

5 Jitter overview

5.1 Serial transmissions

Serial data communication complements parallel communication schemes where the clock and data transmissions are on physically separate paths and the clock path is used as a timing reference for the others in the receiver. These separate paths behave slightly differently due to physical and bandwidth differences with resulting timing differences between the clock and data signals. Although one may employ methods to compensate the propagation time skew between the different parallel signals, ultimately the same clock signal shall be used for all data signals. This limits the bandwidth of parallel schemes that use a single clock.

--`,,```,,,,````-`-`,,`,,`,`,,`---

Copyright International Organization for Standardization
Provided by IHS under license with ISO
No reproduction or networking permitted without license from IHS Not for Resale

In serial data communication, a separate data clock is not transmitted with the data. Rather the transmit clock is embedded along with the data so the problem of maintaining the temporal alignment between the clock signals and the data signals is eliminated. However, other problems are created in that signal transitions need to be available at intervals that are not too long so that a clock signal may be reconstructed from the single serial stream and the relationship of the reconstructed clock to the bits in the serial stream are maintained within strict limits. Even in the case of serial transmissions there is a basic requirement to maintain adequate alignment between the recovered clock (or whatever timing reference is used by the receiver to latch the bits) and the incoming data. A requirement in high speed serial communication is management of jitter involved with the data transmission and detection so that high quality data extraction from the serial signal is possible.

MJSQ assumes that a recovered clock methodology is used for the receivers.

MJSQ does not address the issues associated with encoding schemes where the phase and signal level contain information, for example phase modulation or multi-level encoding. Simple NRZ schemes are assumed.

5.2 Jitter output context

The term “jitter” refers to the deviation of the timing properties of a signal with respect to a specified reference time. Historically, the jitter is measured at the nominal switching threshold of the signal. The subclauses in this clause provide a detailed description of the context and general requirements to specify generalized jitter effectively.

When the term “jitter” is used in this document it refers to the time behavior of the signal at a specific signal level. If the signal level is not specified, either the context of the usage defines the meaning or the signal level is the nominal switching threshold for the receivers expected in the link.

Jitter is characterized by two generalized types of jitter, deterministic (DJ) and random jitter (RJ). The two categories of jitter are used in jitter analysis because each category accumulates differently in the link and because compliance and budgeting schemes require some restrictions on the jitter distributions.

Deterministic jitter is jitter that is due to non-Gaussian jitter event distributions. Deterministic jitter is always bounded in amplitude and has specific causes. Three kinds of deterministic jitter are identified: duty cycle distortion, data dependent and uncorrelated (to the data) bounded. Examples of deterministic jitter that is uncorrelated to data are power supply noise injection into the serial link and cross talk from other parts of the system. Deterministic jitter is measured as a peak-to-peak value for any distribution. Both the peak-to-peak value and the distribution contribute to the overall system performance.

Random jitter is all jitter that is Gaussian in nature. The overall observed random jitter may consist of a collection of random jitter sources. Because root-sum-of-squares (rss) addition is used in this document independence of the constituent jitter sources is required. Dependence could occur in some cases. For example, if truly random data was transmitted through an AC coupling network, the jitter pdf will be essentially Gaussian. If that data travelled through multiple stages of such networks, the jitter mechanisms would be correlated and Gaussian accumulation would be more linearly additive than rss additive. Since 8b10b encoding imposes a structure on all data we don't have truly random data for 8B10B. The surviving random jitter after encoding is therefore jitter that is uncorrelated to the data. Random jitter after 8b10b encoding is composed only of independent sources and we are therefore allowed to use rss addition for random jitter. This also validates the use of convolution where independence is required.

Because random jitter is practically measured as an RMS value (the same as the standard deviation for a Gaussian distribution), a seemingly small amount of RMS random jitter corresponds to a large peak-to-peak value. The RMS value for random jitter is multiplied by approximately 14 to result in a peak-to-peak random jitter value that corresponds to a 10^{-12} bit error ratio; refer to the jitter mathematics in 6.5. A 10 ps RMS random jitter measurement represents a 140 ps peak-to-peak value, or almost 15 % of the bit period, for Fibre Channel at 1063 MBd.

Copyright International Organization for Standardization
Provided by IHS under license with ISO
No reproduction or networking permitted without license from IHS Not for Resale

5.3 Jitter tolerance context

CDR circuits, whether analog PLL-based (Phase-Locked Loops) or digital-based, react differently depending on the rate of change or frequency of the timing misplacement. If the rate of change is gradual and "trackable" by the CDR, no bit errors occur. If jitter is instantaneous (within one bit time) and of sufficient amplitude (such as 50 % of a bit time), the CDR cannot track the timing shift and the recovered bit may be in error.

The ability to recover data successfully in the presence of jitter is called jitter tolerance. Jitter tolerance is measured as the jitter amplitude over a jitter spectrum where the link achieves a specified bit error ratio. A jitter tolerance measurement is performed as a bit error ratio measurement under the presence of a controlled amount of jitter.

Since BER performance also depends on the signal amplitude (many receivers tolerate more jitter if the signal is larger), a complete signal tolerance that includes both amplitude and jitter is required to determine compliance. If the amplitude is not separately specified in a tolerance measurement, it is assumed that the jitter tolerance is measured with the smallest allowed signal amplitude.

5.4 Jitter assumptions summary

The basic assumptions used in this document are summarized below:

The acquisition of the raw data is based on the assumptions listed immediately below:

a) Simple NRZ schemes are used.
b) JItter is composed of a collection of jitter events that occur at most once per bit period.
c) Clock recovery schemes are used in the link receivers.

In order to separate DJ from TJ and to do signal budgeting based on that separation the following assumptions apply:

a) RJ is uncorrelated to anything else.
b) DJ does not have a Gaussian probability density function when measured with the repeating data patterns prescribed in this document.
c) 8B10B encoding is used and has a DJ ceiling around BER~1E-4 for the data and around 1E-6 when BUJ (e.g.,crosstalk is included) - other encoding schemes that have similar DJ ceilings are also applicable.
d) These methods may use extrapolation, requiring the assumption that CDF/BER floors are less than 10E-12.
e) Spectral noise floors have a Gaussian PDF.
f) Jitter budgeting (separation of DJ and TJ and assigning values to each) is done by a single curve fitting method regardless of the method used to acquire the raw data.
g) Coding other than 8b10b may violate the assumptions above and not produce accurate budgeting results with the methods described.

The methods described for acquisition of TJ and the jitter population distribution (PDF or CDF) are applicable down to the noise floor regardless of the encoding scheme used.

5.5 FC-0 and MJS(-1) interface overview

The physical architecture within a transmitter interface and a receiver interface is assumed to be representable by the forms shown in figure 5 and figure 6. For simplicity, the entire interface structure is termed transmitter or receiver in this document and the transmitter and receiver shown in figure 5 and figure 6 are subsumed.

NOTE Figure 5 corresponds to Figure 9 in FC-PH.

--`,,```,,,,````-`-`,,`,,`,`,,`---

Copyright International Organization for Standardization
Provided by IHS under license with ISO
No reproduction or networking permitted without license from IHS Not for Resale

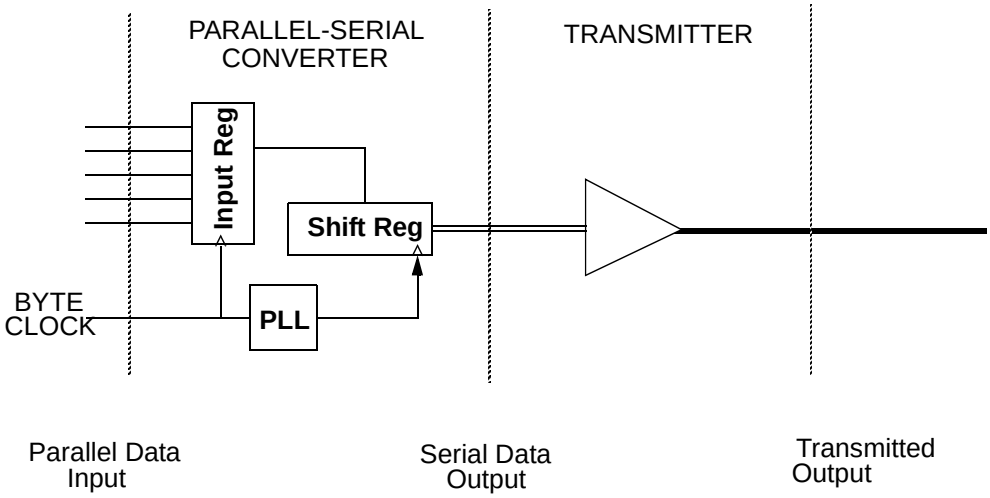

Figure 5 - FC-0 transmitter interface

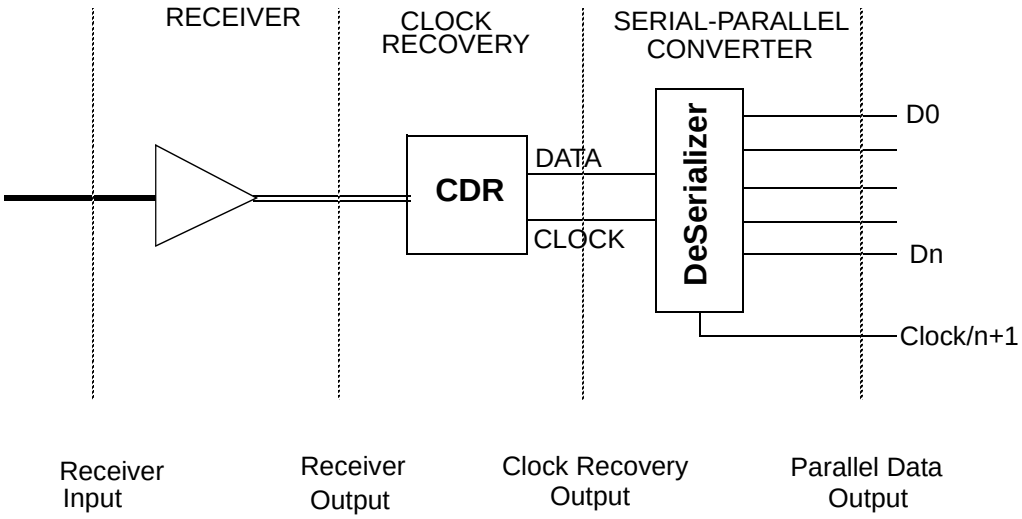

Figure 6 - FC-0 receiver interface

The reference times used to quantify the jitter and signal quality vary with specific method and physical location.

5.6 Fibre channel physical architecture

A brief description of the FC physical architecture is contained in this subclause. See FC-PI for a more complete description.

A Fibre Channel fabric link consists of the functional blocks shown in figure 7. The TxRx connection in an FCAL architecture is the same as for fabrics for MJSQ purposes. From a timing and jitter perspective, the following characteristics shall be noted. Fibre Channel uses plesiochronous timing where the port may transmit data at a slightly different frequency from its receive data frequency. Elastic storage exists within the protocol function to absorb the frequency differences as well as the maximum wander present in the link. The serializer function is responsible for suppressing jitter components present in the port from propa-

--`,,```,,,,````-`-`,,`,,`,`,,`---

Copyright International Organization for Standardization
Provided by IHS under license with ISO
No reproduction or networking permitted without license from IHS Not for Resale

gating onto the link. The deserializer recovers a bit clock from the serial data that reliably allows the deserializer to provide parallel data and a recovered byte clock to the protocol function.

A Fibre Channel fabric link is a duplex serial data connection between two ports including the serializer, deserializer, PMD, connectors and cable assemblies. A link is necessary for communication between two ports. A link includes a minimum of a pair of transmitter-receiver connections. A TxRx connection is a simplex link consisting of one transmitter-receiver pair. A link and a TxRx connection are shown in figure 7.

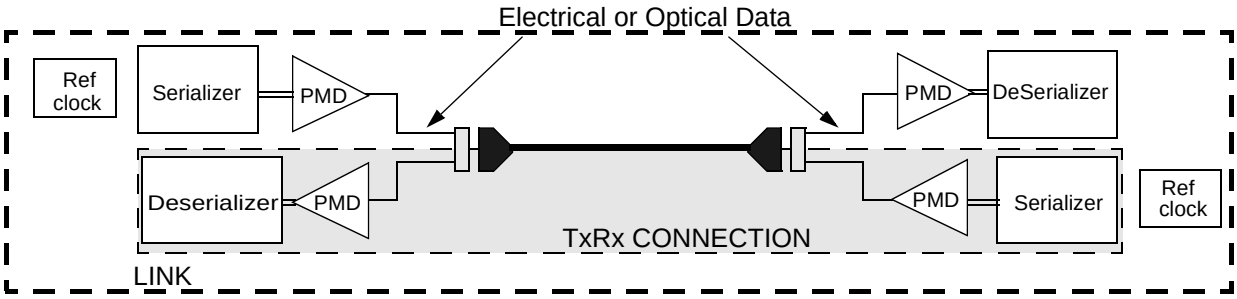

Figure 7 - Fibre channel fabric link

A port by definition contains protocol intelligence, elasticity mechanisms to absorb wander and locally timed serial data transmission. Other components in a TxRx connection may be used that attenuate jitter or re-amplify the signal to improve the signal quality. In actual system implementations, these may include active buffers, port bypass circuits, or reclockers. An example of a complex system implementation for storage application using Fibre Channel Arbitrated Loop is given in figure 8. In this system, a link between the host adapter Port and the disk drive in Port 2 is rather complex. This link would include a HA Tx to HDD Rx connection through a hub with repeaters, an enclosure with repeaters and a backpanel with one PBC and a HDD Tx to HA Rx connection through multiple HDD Ports acting as retimer circuits, several port bypass circuits, an enclosure repeater and a hub repeater.

--`,,```,,,,````-`-`,,`,,`,`,,`---

Copyright International Organization for Standardization
Provided by IHS under license with ISO
No reproduction or networking permitted without license from IHS Not for Resale

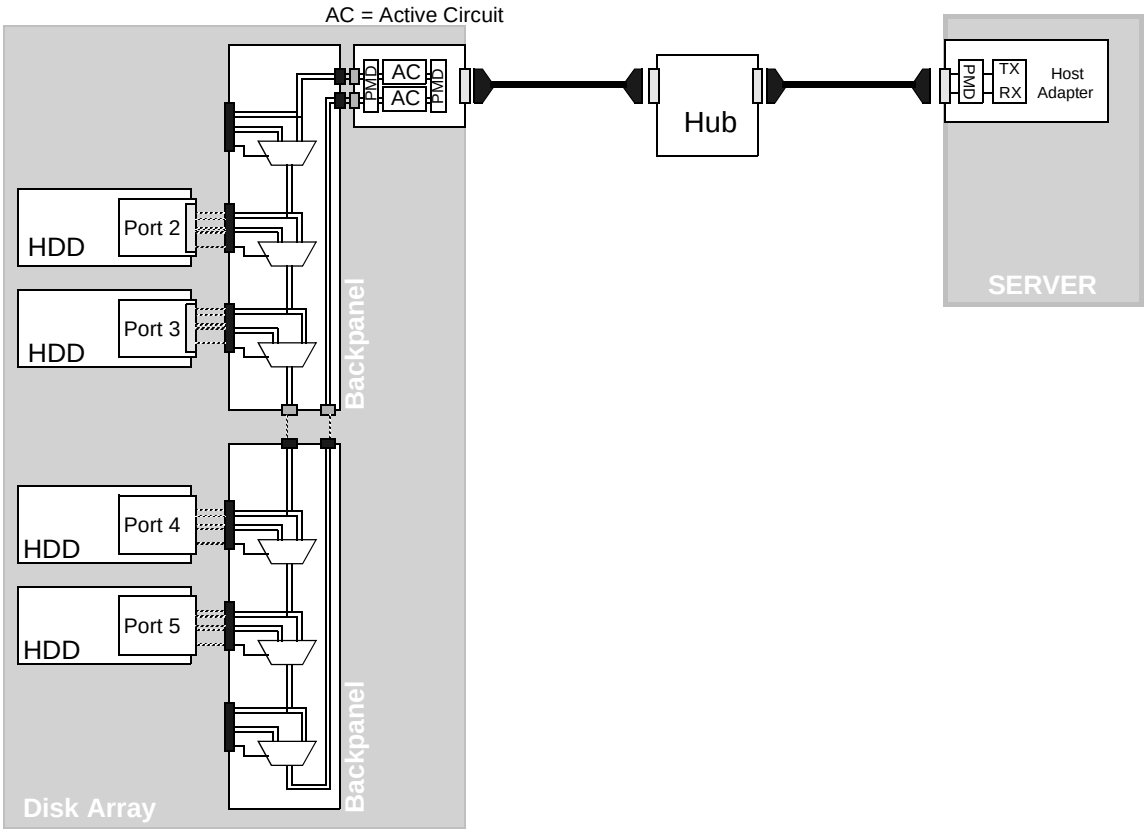

Figure 8 - Example fibre channel link storage system implementation

As shown in figure 8, a Fibre Channel Arbitrated Loop is not necessarily a point to point link with only bulkhead compliance points. It shall be clearly understood where TxRx connection interfaces exist within a system, so that jitter allocation compliance may be enforced at those points.

Figure 9 shows two examples illustrating the interoperability / compliance points with and without the use of internal connectors for media interchange and with and without the use of retimers. Interoperability points are defined at the internal device (β), the internal PMD connector (δ) and the external enclosure (or equivalently, system bulkhead) connector (γ). A reference point (α) is defined at the serialize/deserializer chip containing the re-timing function. A device such as a host adapter or disk drive intended for embedding into a larger system may have a connector that is not the actual system bulkhead connection. An enclosure is something that houses a Fibre Channel port that passes emissions and safety certification.

All measurements shall be made through mated connectors, as appropriate (β, δ, γ). For signal output measurements the mated connectors are always upstream of the signal measurement point. For signal tolerance measurements the signals to be applied to the DUT are calibrated with the connector upstream of the calibrating instrument but the actual tolerance measurement is made with the calibrated signal applied to the connector on the DUT that is downstream of the connector separation point.

A system bulkhead connector (γ) is equivalent to the current S and R points in the FC-PH specification. The terminology, TPx, used in IEEE 802.3 for γ and α for applications with no internal connectors, is also shown in the upper left portion of figure 9.

The β point is defined to be the internal connector closest to the retimer element as shown in the upper right and lower right examples. If a β point is connected to a δ point a retimer is required between the β and the δ points in order to isolate the internal TxRx connections from the external TxRx connections. The

Copyright International Organization for Standardization
Provided by IHS under license with ISO
No reproduction or networking permitted without license from IHS
Not for Resale

retimer resets an internal compliance point such that all the jitter elements used internal to the storage array may use all the jitter budget allowed from β_T to β_R (not shown).

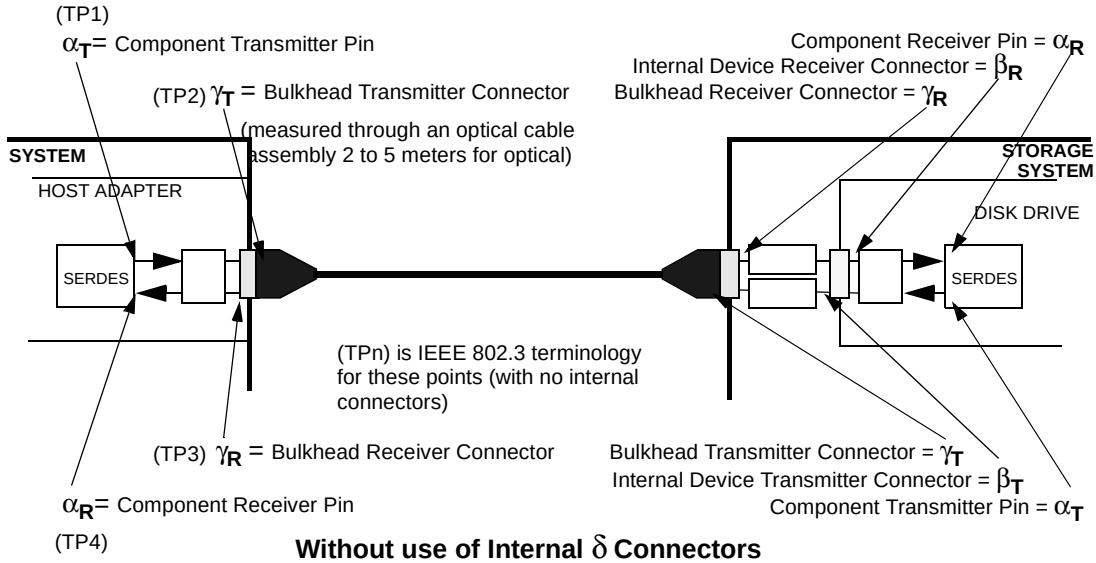

Without use of Internal δ Connectors

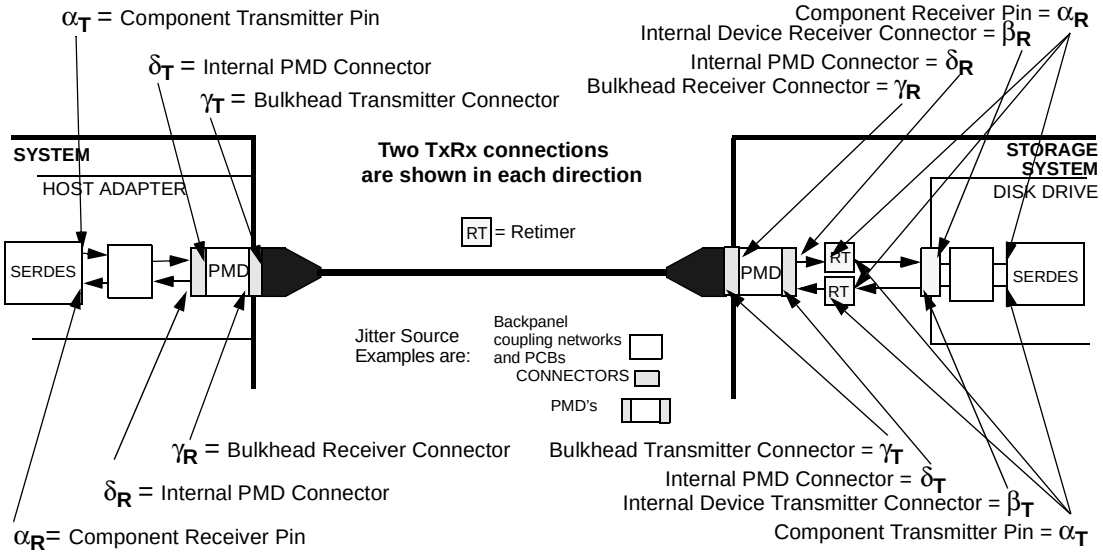

With use of internal δ connectors and retimers

(α is a reference point, not an interoperability point)

Figure 9 - Interoperability points examples at connectors

--`,,```,,,,````-`-`,,`,,`,`,,`---

Copyright International Organization for Standardization
Provided by IHS under license with ISO
No reproduction or networking permitted without license from IHS Not for Resale

6 Jitter fundamentals

6.1 Purpose of addressing all important signal levels

In order to have the measurement of signal properties relate in a definitive way to the performance of receivers one recognizes that receivers may react to signals at other than the nominal switching threshold and may react differently to different jitter distributions or other signal properties. As a consequence, the jitter distribution at other than the nominal switching threshold level may be critical. The method for specifying acceptable performance limits at these other signal levels is an eye mask similar to that used for oscilloscopes as described in 6.6 along with bathtub curves described in 6.4.

6.2 Essential properties of signals

6.2.1 Introduction

Fundamentally, a signal is a specific relationship between signal level and time.

The level of a signal, or signal level, is its instantaneous intensity measured in the units appropriate for the type of transmission used at the point of the measurement. The most common signal level unit for electrical transmissions is voltage while for optical signals the signal level or intensity is usually given in units of power: decibel meters and microwatts (optical modulation amplitude).

Electrical signals are assumed to be baseband (i.e., not the result of modulation).

Since the information of interest in optical serial communications is transmitted as an amplitude modulation of a single carrier wavelength, the signal level of interest is the average optical power around an instant in time at the carrier wavelength. This average is taken in the optical receiver where the optical signal is converted into an electrical signal. The details of the averaging process are not important to this document since the data rates of interest are orders of magnitude which are lower than the optical carrier frequency for all practical Fibre Channel applications.

Even though the baseband electrical signal and the envelope of the modulated optical carrier may appear similar for similar data content, the physical mechanisms of transmission are very different. Nevertheless, from a signal quality point of view there is a great deal of commonality and in many cases in this document there is no distinction drawn between electrical and optical signals.

A number of properties of signals may affect the response of receivers. Since real signals may have very complex shapes and different receivers may react differently to the same signal it is important to define the most important signal properties that are known to affect receivers. Among the properties that could be important are: distribution of signal level, distribution of jitter population, whether rising edge or falling edge, slew rate, rise/fall time, spectral content, common mode content and imbalance. The methodologies described in MJSQ consider the signal level, the timing distribution (at different signal levels) and the rising or falling edge (for some methodologies) in full recognition that other properties may be important. The effort required to address the signal level, timing distribution and signal edge is significant. These properties are described in the remainder of 6.2.

6.2.2 Signal amplitude versus signal level

Signal amplitude is a property of the overall signal that describes the peak or peak-to-peak values of the the signal level. When signal transitions interfere with or overlap each other in a signal the effective signal amplitude may be expressed as a vertical waveform eye opening.

6.2.3 Time, timing reference and jitter timing reference

Time measurements require a reference time in order to be reproducible. In other words, all time measurements are the difference between a reference time and the time where the measured event is recorded. For MJSQ the time reference used for calculating jitter is called the jitter timing reference. This reference may be different from other timing references available in the system.

Copyright International Organization for Standardization
Provided by IHS under license with ISO
No reproduction or networking permitted without license from IHS Not for Resale

In order to comply with the methodologies in MJSQ the jitter timing reference shall be derived only from the data stream. See 6.10. No other jitter timing reference shall be used including: reference bit clocks supplied externally by the transmitting device (e.g. BERT's) and internal clocks used to create the transmit signal.

The present state of the art requires that the same jitter timing reference be used for all parts of the signal. It is beyond the scope of this document to create a relationship between different jitter timing references at different signal levels. This statement is similar to stating for oscilloscope based measurements that the trigger level shall remain constant for all measurements. Some choices for jitter timing reference are discussed in 6.8.

The jitter timing reference choice is perhaps the single most important part of selecting a practical measurement method for signal quality.

6.2.4 Considerations when using hardware based jitter timing references

Since jitter timing references are the references in much the same way that a ground is the reference for a single ended electrical signal any noise in the reference directly affects the accuracy of the basic measurement. In general, if the jitter timing reference has jitter, X_t, then the jitter that is measured is X_m minus X_t where X_m is the actual time of the measured signal. MJSQ does not deal with jitter in the jitter timing reference other than that required for Golden PLLs. It is up to the suppliers of the instrumentation to deliver very low noise jitter timing references.

6.2.5 Jitter and noise relationship

Consider a portion of a signal as shown in figure 10. When the nominal signal is disturbed by noise or jitter the position of the signal changes. Figure 10 shows two disturbed signals that were derived from the nominal signal. Noise properties and jitter properties may both be measured in the immediate neighborhood of a point in signal level - time space. Noise may cause jitter and jitter may cause noise. However, the cause of the disturbance to the nominal signal does not intrinsically alter the measured noise or measured jitter.

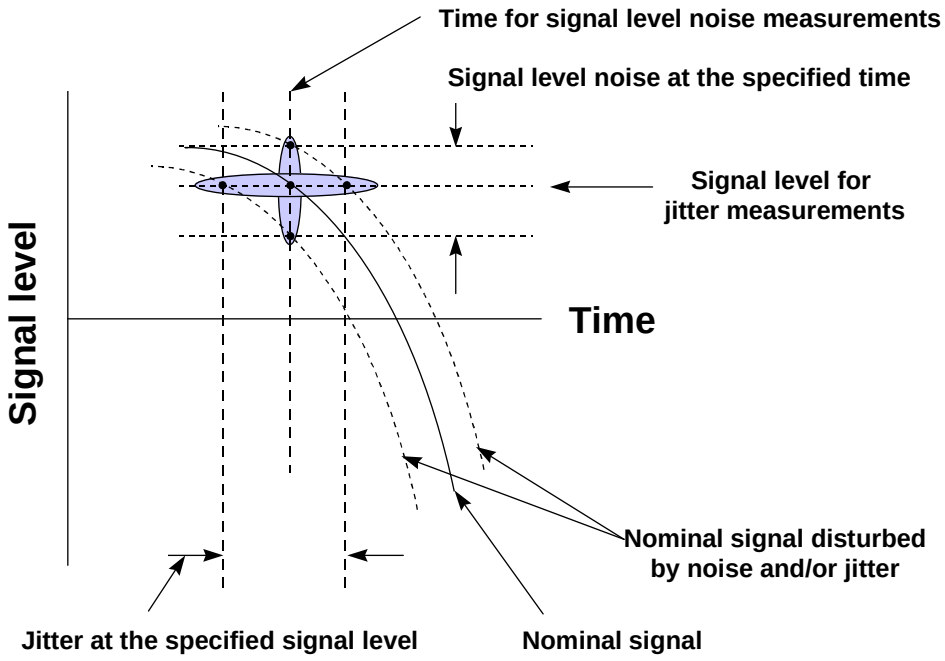

Figure 10 - Noise and jitter in the same portion of the signal

Copyright International Organization for Standardization
Provided by IHS under license with ISO
No reproduction or networking permitted without license from IHS
Not for Resale

Most of the content of MJSQ assumes the constant signal level (constant measurement threshold), jitter condition. For many purposes a constant sample time (within the eye), signal level noise condition could also be a valid representation of the disturbed signal. Noise, like jitter, is also comprised of deterministic and random components that may degrade the signal quality and lead to data errors. Effective signal amplitude reduction (or vertical waveform eye closure) is a predominant limitation in many links.

For measurements near the nominal receiver switching threshold the jitter method is traditional. For measurements near the center of the bit time the signal noise method is traditional. In fact, either method allows a complete mapping of the signal level - time space.

If one knows the shape of the signal in the vicinity of the measurement then a jitter measurement may be converted to a signal level noise measurement and vice versa. In fact, the jitter optimized oscilloscope data acquisition method described later in this document is partially based on that conversion.

If a conversion is required between noise and jitter, limitations may exist to the validity range for this conversion. The nonlinearity of the signal, the bit time of the data pattern and the amplitude of the signal may all impose limits on this conversion. For example, in the case of a Gaussian noise (that is unbounded) the conversion to unbounded jitter cannot be based on the properties of a signal transition since that signal transition is bounded by the amplitude of the signal. Jitter derived via conversion from noise in this way is limited to a single rise time that is clearly bounded. There are other limitations with conversions. In general, conversion limitations may lead to a large understatement of the Gaussian jitter. This document assumes that any conversions done remain valid over the 1E-12 range within a single bit time.

Another important issue is the validity of extrapolations that are used. The conditions required for a valid extrapolation depend on the specific conversions used and on the point in signal level - time space of interest. For example, in figure 10 the changing slope of the signal causes distortions in the noise induced jitter distribution - a Gaussian noise source may not produce a Gaussian jitter distribution. In general, one should attempt to validate that the conditions of the measurement support the assumptions required for the extrapolation.

This topic is expected to be further explored in MJSQ-2.

6.2.6 Rising edges and falling edges

One consideration for acquiring signal quality data is whether the reference time and/or event being measured are associated with a rising or falling signal “edge”. Whenever the signal level changes state from high to low or low to high a signal edge or transition is produced. Usually, the signal in the transition period between the states has a monotonically changing signal level. However, conditions may exist in acceptable links where slope reversals occur during this transition.

The signal quality measurement results may depend on the choice of whether the timing reference is derived from rising edges, falling edges or a combination thereof. Complete signal quality specification methodology requires examination of all combinations of rising and falling edges for both the jitter timing reference and the signal under consideration.

It may be useful for diagnostic purposes to separate results from specific combinations of rising and falling edges.

In order to avoid effect of DCD in the jitter timing reference only the rising edge or the falling edge (but not both) may be used from the jitter timing reference signal.

6.3 Number of events per bit-period

A major goal of MJSQ is to specify methodology that enables direct comparison of signal events with bit errors experienced by a link receiver. One key requirement toward realizing this goal is that no more than one event be reported from the signal in any single bit time since receivers cannot generate more than one bit error per bit time. As a corollary, the total number of signal events reported shall not exceed the total number of bits transmitted in any given time period.

--`,,```,,,,````-`-`,,`,,`,`,,`---

Copyright International Organization for Standardization
Provided by IHS under license with ISO
No reproduction or networking permitted without license from IHS Not for Resale

The signal is assumed to be continuous in time and if instrumentation were fast enough, theoretically multiple events per bit-period could be captured for some signals. For example, detection of multiple events per bit-period is possible for measurements of slow edges when using over-sampled real time digitizing oscilloscope technology. In data acquisition schemes that allow multiple signal events per bit period some scheme to filter the reported WMV events to no more than one per bit-period shall be used.

This single event per bit-period constraint is useful when dealing with signals that have slope reversals because it guarantees that no double counting is possible for the same bit time.

The number of times the signal crosses the signal level of interest per bit-period is affected by the pulse time compared to the bit-period, the level of the signal being examined, whether slope reversals are present, whether distinction is made between rising and falling edges and the positioning of the timing reference with respect to the signal edges. Slope reversals are common in links operating at less than 1 Gbit/s electrical applications due to reflections and crosstalk. Optical transmitters are also capable of producing slope reversals through relaxation oscillations for example.

The number of events could be seriously misreported if one had the possibility of multiple events per bit time. There are several possibilities for the number of events occurring at different signal levels as shown in the signal level versus time, an example is shown in figure 11. Since the ultimate goal of signal quality specifications is to relate the signal quality to the receiver performance and the receiver reports at most one bit error per bit received, it would be possible for the signal to be measured as producing six signal events where only one detected bit is possible in this time period.

Figure 11 only shows multiple counting due to slope reversals occuring in conjunction with a signal transition. Noise and transmitter signal distortions allow multiple counting to be theoretically possible anywhere in the bit time including during signal transitions, in the center region of the bit time and when the signal state is not changing due to the data pattern (several 1's or 0's in a row).

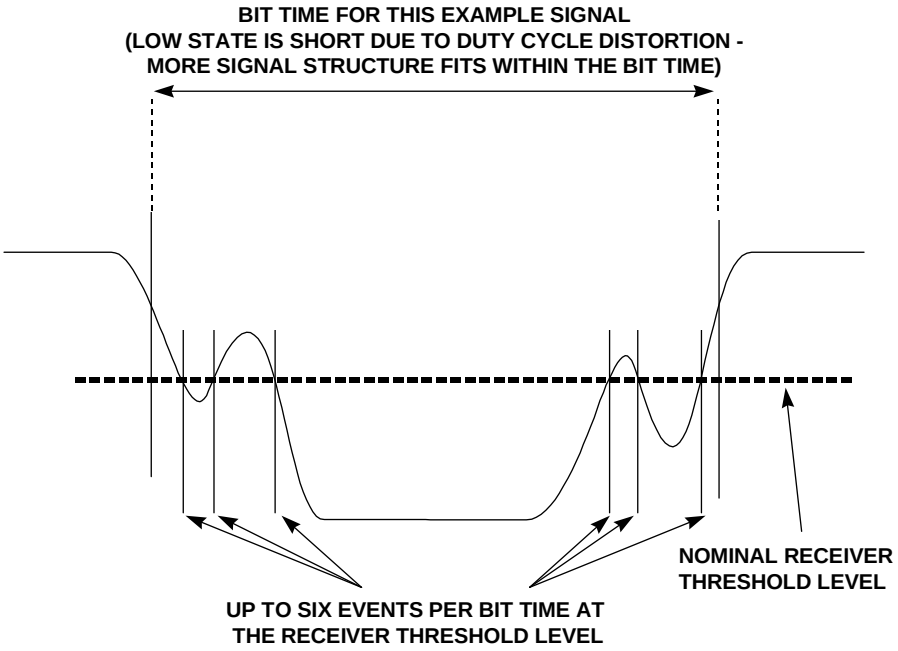

Figure 11 - Example of multiple events within the same bit time

At most a single event per rising of falling edge shall be reported.

Copyright International Organization for Standardization
Provided by IHS under license with ISO
No reproduction or networking permitted without license from IHS Not for Resale

Signal quality measurements are significantly coupled to receiver detected errors by the same counting statistics maintaining at any signal level measured.

6.4 Statistical distribution at a specific signal level

A requirement that signal quality data be acquired at specified signal levels pervades this document. The more signal levels are examined the more complete the signal quality measurement.

The population of times observed (events) when the signal crosses a specified level of interest may be compiled into a histogram. This histogram constitutes the statistical distribution.

Statistical distribution properties are critically important to the way receivers set their internal timing references (the one used to detect the bits in the receiver). More discussion of this issue is in 6.13.

6.5 Basic relationships within statistical jitter distributions

6.5.1 Overview

Subclause 6.5 describes the mathematical basis for jitter distributions and specification methodologies. Concepts and terminology that lead to the jitter eye mask and signal eye contour are developed. Insight into the relationship between jitter events, PDF's, CDF's, RJ, DJ, jitter eye opening, waveform eye opening and bit error ratio results.

The bit error ratio in the signal in this clause is based on the population of signal events that exist at time positions where there should be no signal events in the known data pattern and data rate being used. This population of erroneous signal events may be detected, for example, by a BERT strobed at a specific time and signal level within the unit interval. The signal bit error ratio is the number of erroneous signal events divided by the total number of bits transmitted over the measurement time period. A BERT with an instrumentation quality receiver is assumed.

Using a BERT methodology for signal quality measurements is different from using the same BERT to determine the bit error ratio as detected by the actual receiver in the link. This distinction is important because events reported as bit errors when performing a signal quality measurement may have only a loose relationship to link bit error ratio reported by a real link receiver. The closer the real link receiver comes to being a 'worst case' receiver the tighter the relationship between signal event errors and link errors. Signal event errors are conditions that are capable of producing link bit errors in a compliant (but perhaps just barely compliant) link receiver.

The mathematics that apply to the statistics of bit errors in signals are derivable from those that apply to schemes that sample the signal level and time properties of signals. One integrates the population of signal events from the time of the strobe point to infinity (or to - infinity) to determine the total population of erroneous signal events.

The distinction between BERT measurements on signals and direct signal level and time measurements from other instruments may be easy to miss since the distributions have similar shape over the Gaussian tail regions (the integral of an exponential function is still an exponential function). The numbers associated with the probability distributions are significantly different, however.

In figure 12, consider a portion of a typical eye diagram display that may be seen near the receiver switching threshold signal level. This discussion assumes that the source used to trigger the instrument is the same as that used to create the signal being measured and that the trigger source itself has no jitter. Typically only the rising or falling edge (not both) of the trigger source is used. In this case duty cycle distortion on the trigger source is not a concern. Jitter in the signal at the signal threshold level is indicated by the time between the trigger source and the time of the crossings of the threshold signal level as the data toggles between logic states. Histograms of the recorded population of the times of threshold crossings may be calculated as shown in figure 12.

Copyright International Organization for Standardization
Provided by IHS under license with ISO
No reproduction or networking permitted without license from IHS Not for Resale

The timing reference used for this subclause was chosen for ease of conceptual understanding. Using different timing references leads to different distributions but the treatment of jitter and bit errors has the same mathematical basis. Actual measurements shall use the jitter timing references specified in 6.2.3.

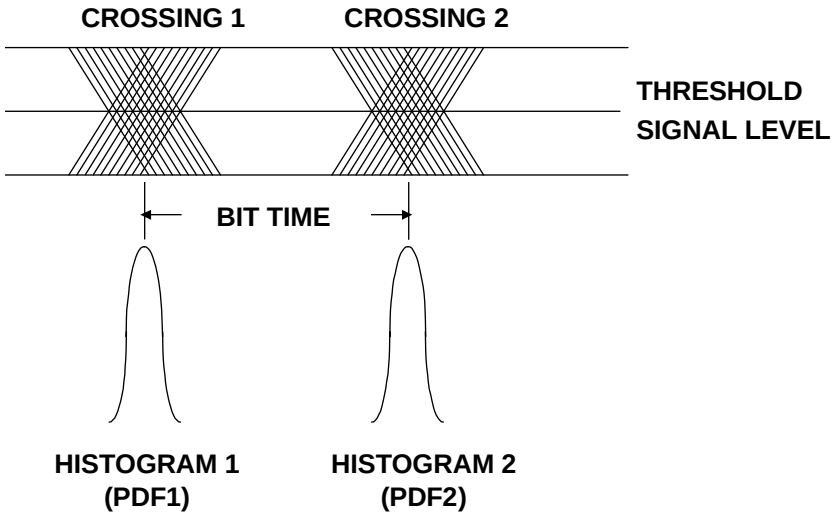

Figure 12 - Signals crossing a threshold level at different times

In the limit of infinite number of events these histograms represent continuous probability density functions (PDFs) of the population of signal events at different times when the signals cross the signal level defined. The means of the PDFs determine the bit cell boundaries. To simplify matters, the time scale is given in terms of unit intervals (UI) with 0,5 located at the exact center of the bit time as determined by the two means.

In figure 13, the BERT receiver is shown measuring the errors in the signal at the center of the eye opening at the sampling time where the tails of the transition histograms are small. A signal error occurs if a transition is on the wrong side of the sample time, st. The error conditions are (1) when a transition from histogram 1 occurs to the right of (after) st and/or (2) when a transition from histogram 2 occurs to the left of (before) st. Because the tails of a normal (Gaussian) function are infinitely long there is always some population from all transitions in every measurement (even from transitions well before or after the transitions of primary interest). Fortunately, it is usually possible to ignore contributions from non-adjacent edges because the population is very small. The remainder of this subclause considers only contributions from adjacent signal transitions.

To calculate the probability of either transition causing a signal event error due to jitter, the area under its PDF tail on the errored side of st is calculated. This calculation assumes that each PDF may be analyzed independently and that they are the same functions but displaced by exactly one unit interval. This displacement does not imply that the left and right tails of the same PDF are symmetrical. Under this assumption in figure 12 PDF1 is PDF (t) and PDF 2 is PDF (t-UI). Practically, if there is significant overlap between PDFs from adjacent edges it may be difficult to determine which edge is responsible for the population.

Copyright International Organization for Standardization
Provided by IHS under license with ISO
No reproduction or networking permitted without license from IHS Not for Resale

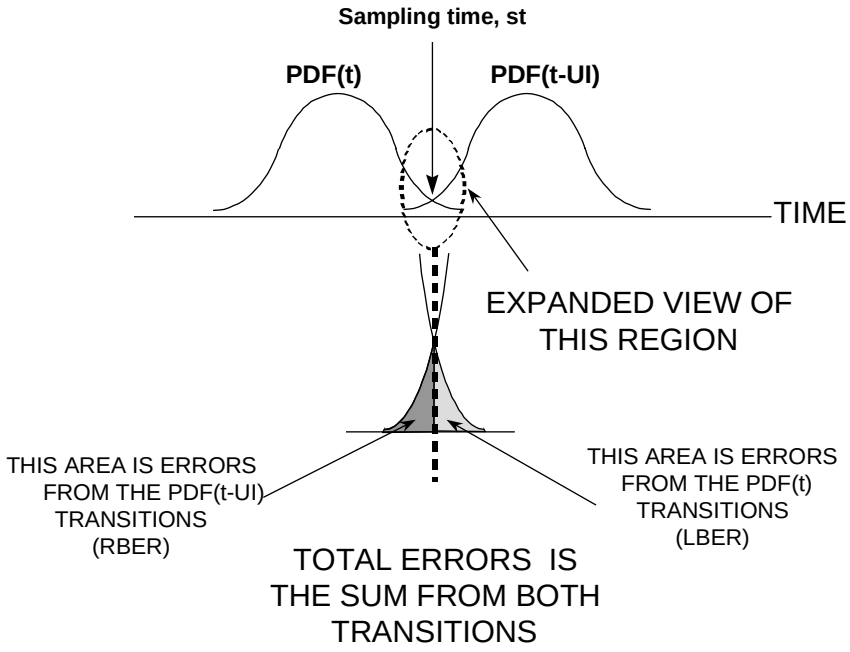

Figure 13 - Probability of signal event errors from adjacent signal transitions

NOTE st is shown at the midpoint of the bit time but may be at any point.

This area under the tail for each PDF is the cumulative distribution function, or CDF and is the bit error contribution from that tail. For PDF (t), the CDF is produced by integrating the right tail of PDF (t) from st to $+\infty$; for PDF (t-UI) the CDF is produced by integrating the left tail of PDF (t-UI) from $-\infty$ to st. The overall probability of bit errors due to both transitions is the sum of the two CDFs (assuming that the tails from neighboring bits contribute negligibly to the probability of error).

In normal statistics, a CDF is simply the integral of its PDF where the final value of the CDF is unity. However, in this document, to calculate a CDF that matches a bit error ratio (BER) concept for the signal, the probability of a transition-caused error is multiplied by the probability of actually having transitions at 50 % (usually interpreted as the average transition density). This discussion assumes typical data streams have a transition at 50 % of the bits (i.e., a transition density, TD, of 50 %).

The following describes the properties of the jitter CDF:

a) each total jitter PDF has an area of unity;
b) BER = CDF = TD * integral of PDF (the jitter CDF includes the transition density factor);
c) the CDF reaches a maximum value of TD, not unity.

From this point on in the document the term CDF refers to the jitter CDF only.

6.5.2 Description of mathematical model

Assume a general jitter PDF, JT (t, W, σ), centered at 0 where t is time, W is the peak-to-peak value of deterministic jitter and σ is the rms value of random (Gaussian) jitter. The right tail of the PDF from the left signal transition, JT (centered at 0) causes bit errors as:

Copyright International Organization for Standardization
Provided by IHS under license with ISO
No reproduction or networking permitted without license from IHS Not for Resale

Equation 1 – Left bit error ratio

$$\mathrm{LBER}\,(\mathrm{st},W,\sigma) = \mathrm{TD} \cdot \int_{st}^{\infty} \mathrm{JT}(\tau, W, \sigma)\,\delta\tau$$

where st is the sampling instant in time and TD is the transition density. LBER is the CDF for the right tail of PDF(t). Similarly, the left tail of the PDF from the right signal transition JT (shifted and centered at 1 UI) causes bit errors as:

Equation 2 – Right bit error ratio

$$\mathrm{RBER}\,(\mathrm{st},W,\sigma) = \mathrm{TD} \cdot \int_{-\infty}^{st} \mathrm{JT}(\tau - \mathrm{UI}, W, \sigma)\,\delta\tau$$

RBER is the CDF for the left tail of PDF(t-UI).

The total BER due to jitter from both transitions, TBER, is given by (see figure 13):

Equation 3 – Total bit error ratio

$$\mathrm{TBER}\,(\mathrm{st}, W, \sigma) = \mathrm{LBER}\,(\mathrm{st}, W, \sigma) + \mathrm{RBER}\,(\mathrm{st}, W, \sigma)$$

In a BERT scan, BER (CDF) is measured as the sample time, st, is swept between the two bit time boundaries. From these BERT scan results, the jitter in the signal may be estimated.

This is also done (simulated) below with the model by generating the CDFs. Again, summing the two CDF's yield the total probability of error from both transitions. This expression indicates the BER as a function of st and PDF width. This is commonly known as a BER bathtub curve.

6.5.3 Relationship between jitter and BER for random jitter distributions

This subclause demonstrates the model using only random, or Gaussian, jitter (RJ). For RJ, the key parameter to be specified is the standard deviation, σ, of the PDF. W, the deterministic jitter magnitude, is 0 in this case. $\mathrm{JT}\,(\tau, W, \sigma)$ for Gaussian jitter, centered at 0, is:

Equation 4 – Gaussian jitter PDF

$$\mathrm{JT}\,(\mathrm{t}, \mathrm{W}, \sigma) = \frac{1}{\sqrt{2 \cdot \pi}} \cdot \frac{1}{\sigma} \cdot e^{-\left(\frac{t^2}{2 \cdot \sigma^2}\right)}$$

The CDF (BER distribution) for a Gaussian PDF (jitter distribution) involves error functions. Figure 14 shows plots of the PDFs (dashed) and corresponding CDFs (solid) plotted on a linear scale. (The PDFs displayed have been normalized to unity-height to make them plot better - the CDFs were generated from unity-area PDFs as required for all PDFs). The CDF includes the multiplier for transition density (50 %). In

Copyright International Organization for Standardization
Provided by IHS under license with ISO
No reproduction or networking permitted without license from IHS Not for Resale

this example, the standard deviation of the PDFs is 0,05 UI rms.

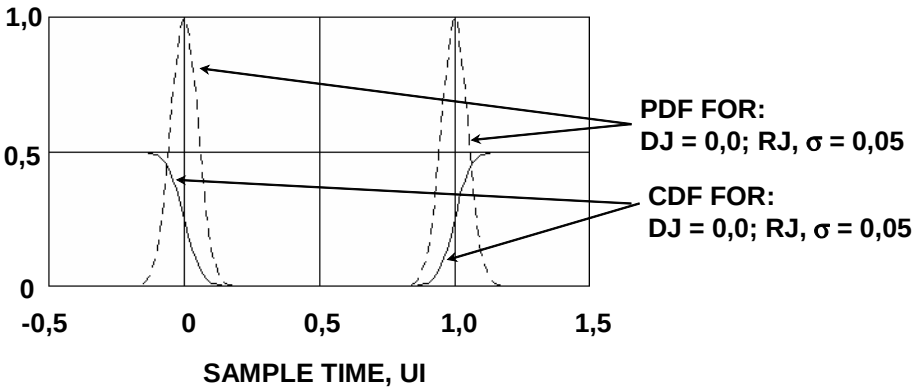

Figure 14 - Jitter eye diagram statistics, linear scale

The sum of the CDFs, shown as total BER in figure 15, from the two sides shows the bathtub shape. The bathtub appears to have a wide central region where the probability of error is small. Fibre Channel specifies the bit error ratio to be better than 10^{-12}. In order to visualize such small values of probability, a log scale is used for the BER axis. See figure 15. The eye opening based on the BER distribution is approximately 0,3 UI at 10^{-12}. Eye opening is based on CDFs not PDFs.

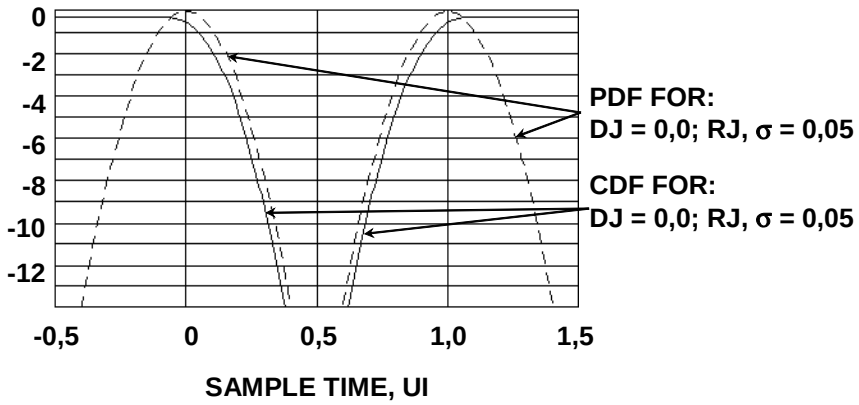

Figure 15 - Jitter eye diagram statistics, log scale

For example, a visual estimate in figure 15 based on the PDF eye opening at 10^{-12} suggests a smaller opening than the opening for the BER based at the same level. This interpretation is incorrect due to the normalization used for the displaying the (PDF) and because of the integration required to produce bit error ratios from PDFs.

BER eye opening, CDF eye opening and jitter eye opening are all equivalent terms. The total jitter (TJ) is defined by this eye opening at a specified BER. The term jitter eye opening is preserved in this document but is not the eye opening of the PDF (the jitter population).

Total jitter measurements made by some common oscilloscopes may differ significantly from the jitter eye opening based on the CDF as defined in 6.5.1.

Copyright International Organization for Standardization
Provided by IHS under license with ISO
No reproduction or networking permitted without license from IHS Not for Resale

In order to ensure that the behavior across the entire bit time is captured it is required that BERT measurements sweep “st” (see Figure 13 for the definition of “st”) across the entire bit time. See also 6.3.

Summarizing: the concept of an excluded region, or opening, applies only to the CDF or to the bit error ratio. Instruments that record the timing of signal events (i.e. record elements of the PDF) calculate the CDF from the PDFs of the signal edges. Some instruments may do this calculation internally, other instruments may not. The calculations, whether internal or external, should be done using the methods required in this document.

6.5.4 Effects of changing the standard deviation for Gaussian PDF’s

The plots in figure 16 show the error probabilities for σ values of 0,03 UI rms, 0,05 UI rms and 0,1 UI rms. The curve for σ = 0,1 UI shows there is no margin against the 10^{-12} error ratio specification. The σ = 0,03 UI curve indicates a BER based eye opening of around 58 % at 10^{-12} and σ = 0,05 UI has a BER based opening of about 0,3 UI.

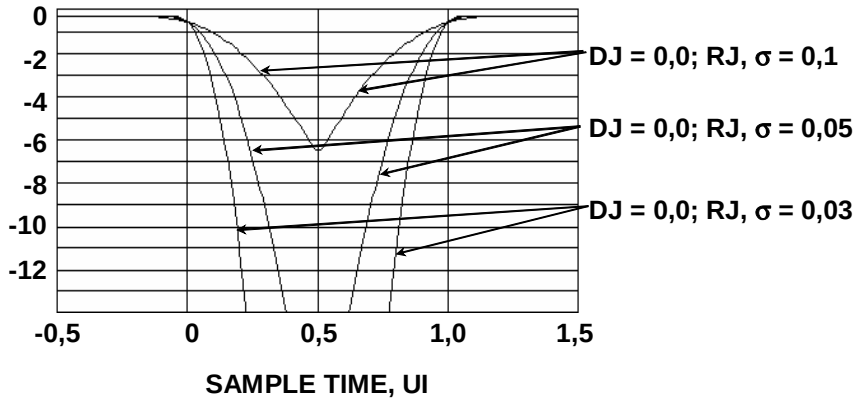

Figure 16 - Jitter eye diagram statistics pure Gaussian different sigmas

6.5.5 Common mistakes relating to statistical properties of measurements.

The following list documents common mistakes that may be made.

a) Drawing a narrow histogram box near the signal threshold on a normal oscilloscope and multiplying the calculated one standard deviation reported from the population in the histogram box by 14 and stating the result as the peak-to-peak total jitter. This generally yields significantly erroneous results because this standard deviation may include mostly DJ population.
b) Using the peak-to-peak jitter number reported by an oscilloscope histogram as the total jitter. This understates the total jitter required by MJSQ (as that existing at the 10^{-12} population level based on the CDFs).
c) Some scopes use +/- 3 sigma for peak-to-peak. Therefore, scope peak-to-peak may also overstate, for example, if the shape of the DJ pdf has a high moment and if the relative magnitude of RJ is very low.
d) In the oscilloscope eye diagram measurement mostly the deterministic components of the signal are seen due to the low 1 000 to 10 000 population levels used to form the eye diagram - ineffective visibility to Gaussian content.
e) Not using the Golden PLL for jitter measurements and simulations (see 6.10).

6.5.6 Addition of deterministic jitter

Total jitter is usually comprised of both random and deterministic components. Consider now that the PDF’s include deterministic jitter (DJ). The general theory for mapping total jitter PDF’s with DJ to BER through the CDF is identical to the theory for RJ alone.

In general, the DJ component has its own PDF and the combined total jitter PDF is a convolution of the DJ and RJ PDFs. For purposes of simplification in the present discussion, it is assumed that the DJ PDF is

Copyright International Organization for Standardization
Provided by IHS under license with ISO
No reproduction or networking permitted without license from IHS Not for Resale

comprised only of a pair of Dirac delta functions (dual-Dirac). Other PDF's are certainly possible. An example of such a DJ PDF is pure duty cycle distortion (DCD). When convolved with RJ, two Gaussian functions result, one for each of the DJ terms. If they are close together (DJ small relative to RJ), the two density functions overlap.

The magnitude of DJ, W, is given as peak-to-peak. Therefore, each Dirac delta function is offset from the mean crossing position by the peak value of DJ, W/2. The magnitude of σ for RJ, in this case, is 0. The PDF for deterministic jitter, centered at 0, is given by:

Equation 5 – DJ PDF

$$JT(t,W,\sigma) = \frac{\delta\left(t,-\frac{W}{2}\right)}{2} + \frac{\delta\left(t,\frac{W}{2}\right)}{2}$$

When convolved with random jitter, the PDF, centered at 0, becomes:

Equation 6 – PDF for DJ convolved with RJ

$$JT(t,W,\sigma) = \frac{1}{2\cdot\sqrt{2\cdot\pi}}\cdot\frac{1}{\sigma}\cdot\left(e^{-\left[\frac{\left(t-\frac{W}{2}\right)^2}{2\cdot\sigma^2}\right]} + e^{-\left[\frac{\left(t+\frac{W}{2}\right)^2}{2\cdot\sigma^2}\right]}\right)$$

Figure 17 shows the total jitter PDF and BER functions for 0,2 UI DJ peak-to-peak with low values of RJ (0,005 UI rms).

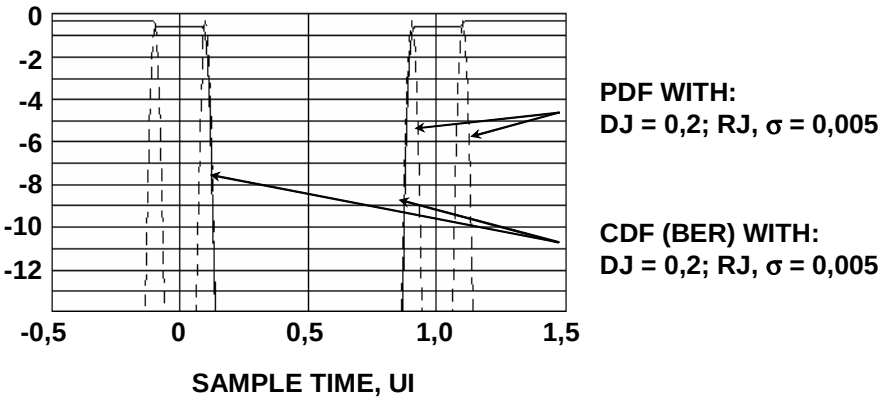

Figure 17 - Jitter eye diagram statistics, dual-Dirac function

The overall jitter eye opening at 10^{-12} is approximately 0,73 UI. Figure 18 shows the 10 base exponent of the total jitter PDF and BER functions again with DJ = 0,2 UI peak-to-peak, but now with RJ = 0,03 UI rms.

Copyright International Organization for Standardization
Provided by IHS under license with ISO
No reproduction or networking permitted without license from IHS Not for Resale

Note how the dual-Dirac function / RJ convolution terms now overlap within each total jitter histogram. The jitter eye opening at 10^{-12} is approximately 0,38 UI in figure 18.

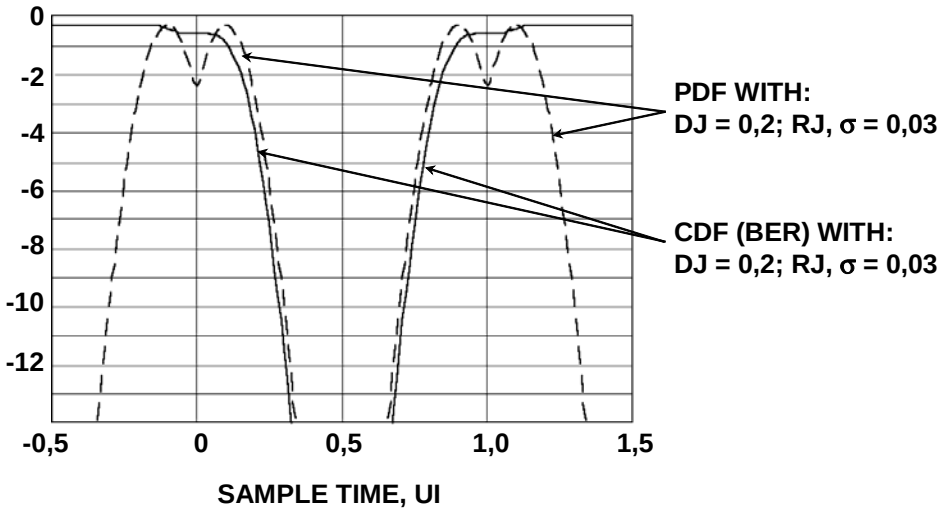

Figure 18 - Jitter eye diagram statistics, increased RJ

The eye may be closed by DJ and RJ in different combinations. Figure 19 shows 3 combinations, with each showing approximately 0,3 UI eye opening at 10^{-12}.

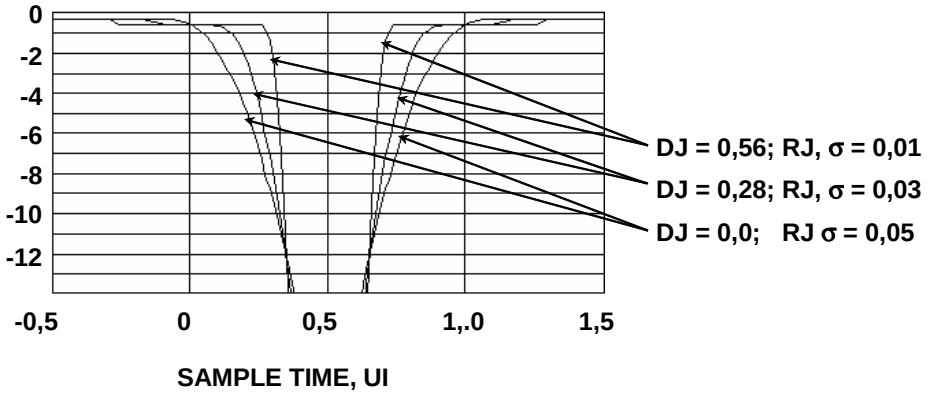

Figure 19 - Various combinations of DJ and RJ

A convenient way to present histogram results acquired at specific signal level is the bathtub format shown in Figure 20. This log-linear plot format shows approximately straight lines for normal distributions in the tail regions. Sometimes extrapolation to low population levels is convenient from this format.

--`,,```,,,,````-`-`,,`,,`,`,,`---

Copyright International Organization for Standardization
Provided by IHS under license with ISO
No reproduction or networking permitted without license from IHS Not for Resale

6.6 Jitter eye mask methodology for signal quality specification

A generalized, simplified form of the CDF is shown in figure 20.

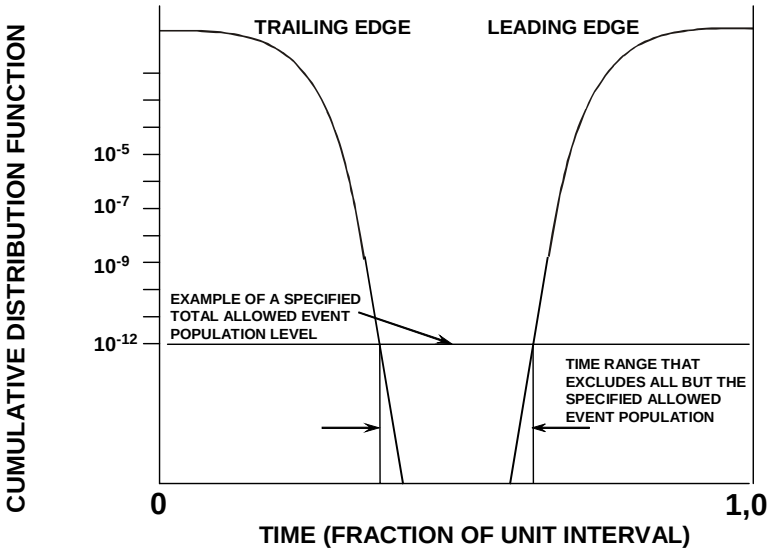

Figure 20 - General form for the CDF bathtub curve at the specified signal level

The CDF bathtub curve is a convenient way to specify the acceptable limits for the time range where all except the allowed population of events may occur. In Figure 20 a 10^{-12} fractional population is shown as an example where the time range is measured. Since this time range may be expressed as a simple number it lends itself to use in describing the acceptable limits at other signal levels.

Notice that the low population time range occurs near the center of the bit time where the signal is the most stable and where the internal strobe in the receiver (if an internal strobe methodology is used) latches the signal as a high or low state.

When the time range and time values at the allowed population (see Figure 20) and at all signal levels are combined into a single graphical representation the result is a concise specification of the total signal quality requirements at all signal levels. A direct connection between a small family of limiting bathtub curves at different signal levels is shown three dimensionally in figure 21.

Copyright International Organization for Standardization
Provided by IHS under license with ISO
No reproduction or networking permitted without license from IHS
Not for Resale

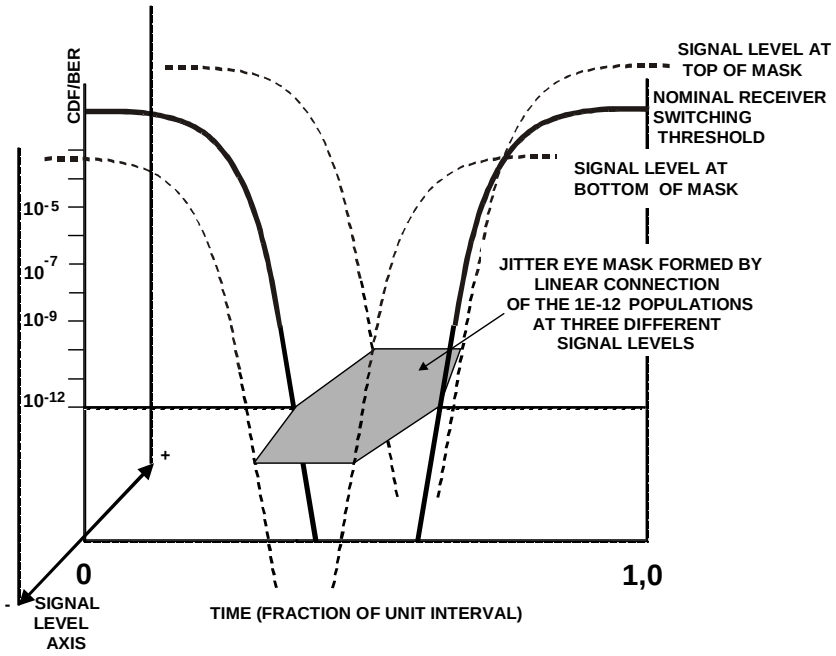

Figure 21 - Relationship of a jitter eye mask to a family of limiting bathtub curves

Two key points concern the relationship of a jitter eye mask to bathtub curves:

a) the shape and size of the mask is expected to depend significantly on the CDF level chosen. For example if 10^{-9} were used instead of 10^{-12} in figure 21 the mask would be larger in all time dimensions;
b) the bathtub curves represent a signal that just meets the eye requirement at the specified CDF level - actual bathtub curves depend on the sample under test and measurement details and are NOT used to define the jitter eye mask.

Only the limiting behavior at a single CDF level and for a single signal measurement process is specified by the mask.

The signal should not exist (as detected by sampling) within the excluded region more often than the allowed population for any signal level. In other words, bathtub curves from compliant signals at all signal levels shall not encroach inside the mask at the specified population level. This is the essence of determining whether a signal is compliant with the jitter eye mask as described in more detail in 6.7.

Jitter eye masks are usually drawn two dimensionally, as shown in Figure 22.

Copyright International Organization for Standardization
Provided by IHS under license with ISO
No reproduction or networking permitted without license from IHS Not for Resale

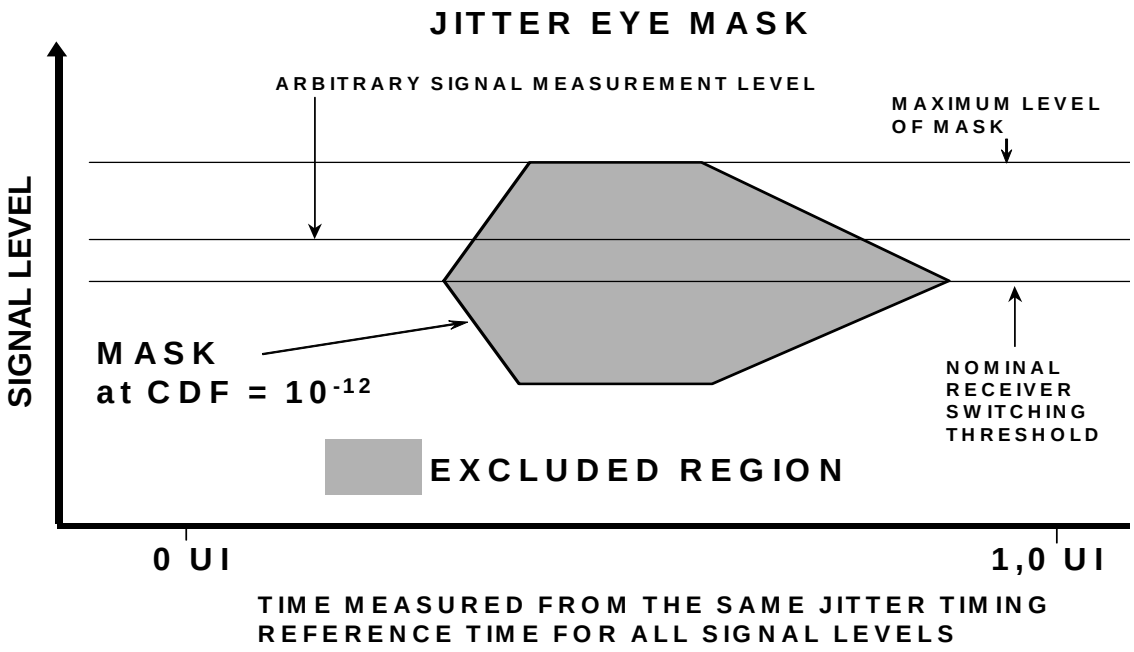

Figure 22 - General form of a jitter eye mask used for signal quality specification

Notice that since there is at most one event per bit-period per signal level and that there are the same number of signal edges at all signal levels, that the signal level that has the CDF with the greatest fractional population within the excluded region is the lowest margin level. For some systems, this lowest margin level occurs at or near the nominal switching threshold of the receiver as has been the tradition in the past. However, the lowest margin point may be the upper or lower mask corners in optical links or in electrical links with high amounts of dispersion.

The signal specifications in FC-PI-n are ambiguous about the intent of the masks in those standards. FC-PI-n specifies the X1 point (at the nominal receiver switching threshold) to be at the CDF = 10^{-12} population but is silent on the meaning of the points at other than X1. In order to comply with the jitter eye mask described in this MJSQ document all points on the jitter eye mask are at the CDF = 10^{-12} population. MJSQ does not address the ambiguity in the FC-PI-n standards as that is a matter for those standards.

6.7 Signal measurements versus jitter eye mask signal quality specifications

The general idea described for jitter eye masks (i.e., the definition of the allowed boundaries of the CDF of signals at the specified population level over the entire signal level - time space) is also useful for displaying signal measurements.

In a signal measurement one does not necessarily expect to see the sharp corners commonly found in jitter eye mask specifications. Real signals rarely have sharp corners. The locus of points in signal level - time space where the CDF = 1E-12 in the actual signal population determines whether a jitter eye mask violation has occurred. Such a locus in a signal measurement is called an ‘eye contour’. If the eye contour encroaches into the jitter eye mask at any point then the signal fails to meet the signal quality requirements.

Figure 23 shows a hypothetical example of an eye contour plotted on the same axes as the jitter eye mask.

Copyright International Organization for Standardization
Provided by IHS under license with ISO
No reproduction or networking permitted without license from IHS Not for Resale

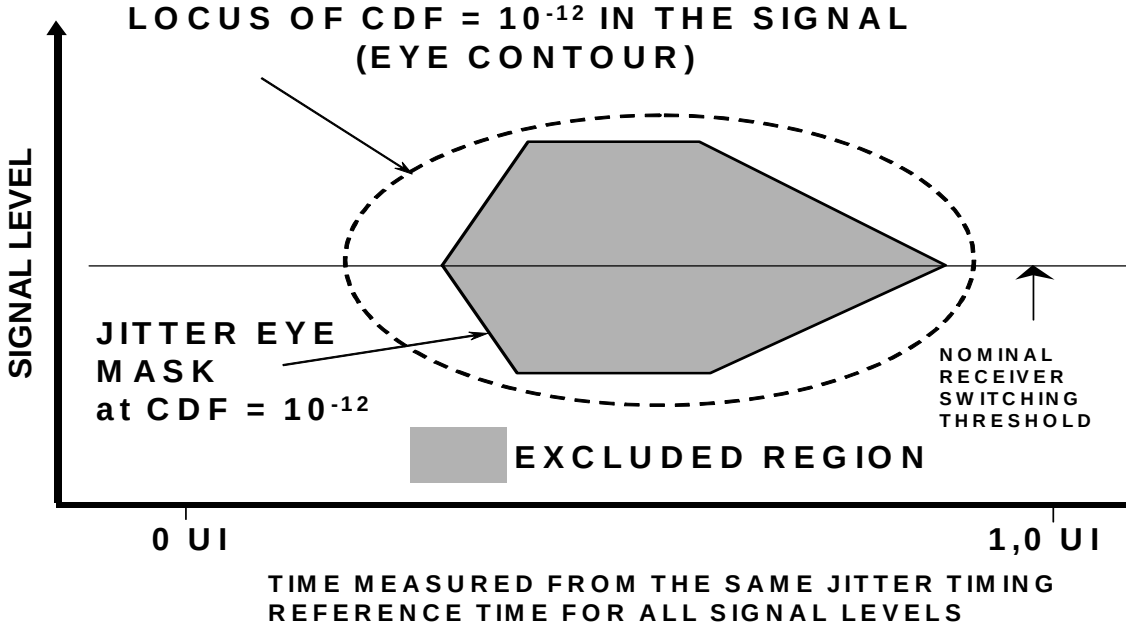

Figure 23 - Example of an eye contour with a jitter eye mask

Since the eye contour does not penetrate the excluded region defined by the jitter eye mask the signal passes the requirements defined by the jitter eye mask at CDF = 1E-12.

6.8 Jitter timing reference at different signal levels during data acquisition

The jitter timing reference is the point in time that is used as the zero for the measurement of reported timing events. Events may occur at signal levels other than that used for establishing the jitter timing reference.

Due to different DJ values at different signal levels, MJSQ requires that only the nominal switching threshold level be used to generate the jitter timing reference for any signal level. The nominal switching threshold is the only point where the jitter does not depend on the signal level of the signal. Allowing other signal levels to be used for the jitter timing reference would effectively allow different answers from different laboratories or different operators. The data pattern and jitter timing reference shall remain constant for data acquisition at all levels.

In order to avoid effect of DCD in the jitter timing reference only the rising edge or the falling edge (but not both) may be used from the jitter timing reference signal.

6.9 Example of a 2-dimensional jitter measurement

A practical example of a simple 2-dimensional time jitter measurement using a TIA at three different signal levels is shown in Figure 24. Measurements were acquired at the signal levels at the top and bottom of the mask and at the nominal switching threshold. From the raw jitter measurements the CDF was calculated prior to plotting the measured distributions in figure 24 and the 10^{-12} CDF level is the edge of the plotted measured distribution (indicated by the RJ arrow with the black head). Some separation of the components of the populations into the different types (as described in clause 6) was also done with the RJ boundary and the DJ boundary indicated. The DJ boundary is the mean of the left and right Gaussian distributions. See 9.2 . The RJ boundary is the time where the CDF = 10^{-12}. Since the measured RJ boundary does not intersect the mask boundaries in Figure 24 this signal meets the total signal quality requirements.

Copyright International Organization for Standardization
Provided by IHS under license with ISO
No reproduction or networking permitted without license from IHS Not for Resale

A linear connection between the three measured points (high signal level, nominal threshold level and low signal level) was made on both sides of the signal distributions for ease of graphical presentation. Additional measurements at other signal levels are required to validate that these linear interpolations are accurate. In many cases the distributions are convex away from the mask between the end points and the switching threshold and the high and low signal levels represent the worst case. However, if reflections or synchronous crosstalk are present, the distribution may not be convex and could have its closest approach to the mask between the nominal threshold and the high/low levels. In this case the use of only the high and low level and nominal switching threshold level would not reveal the true signal quality.

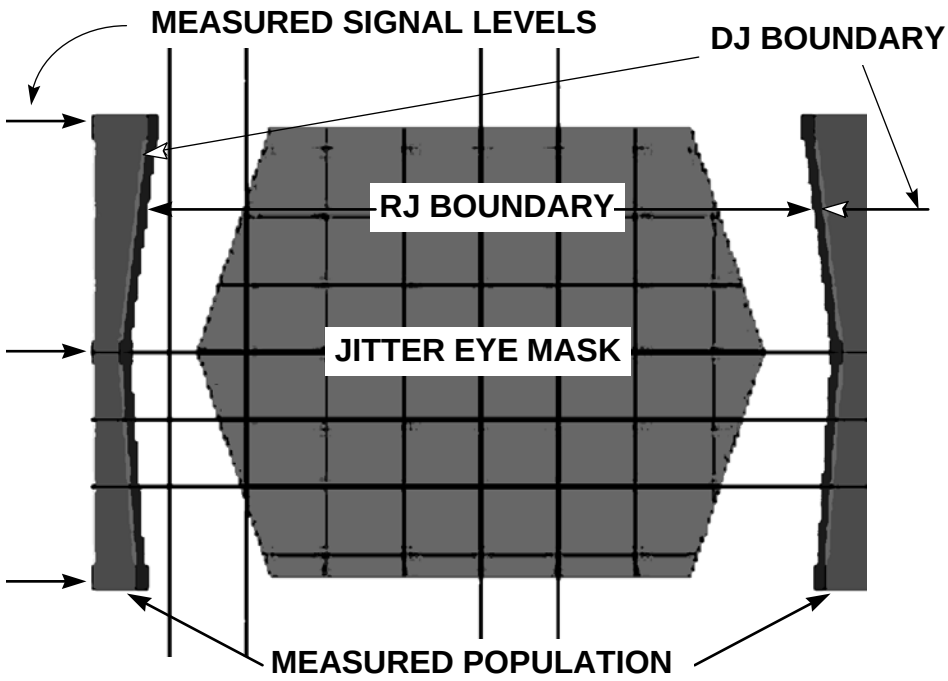

Figure 24 - Practical example using a TIA at three different signal levels

6.10 Jitter timing reference frequency response requirements

6.10.1 Overview

Serial data communication embeds the clock signal in its transmitting data bit stream. At the receiver side, this clock needs to be recovered through a clock and data recovery device where PLL circuits are commonly used. It is well known that a PLL typically has certain phase modulation frequency response characteristics. Therefore, when a receiver uses the recovered clock to time/retime the received data, the jitter seen by the receiver will follow certain frequency response functions as well. Figure 25 shows a receiver that incorporates a typical clock and data recovery system.

Copyright International Organization for Standardization
Provided by IHS under license with ISO
No reproduction or networking permitted without license from IHS Not for Resale

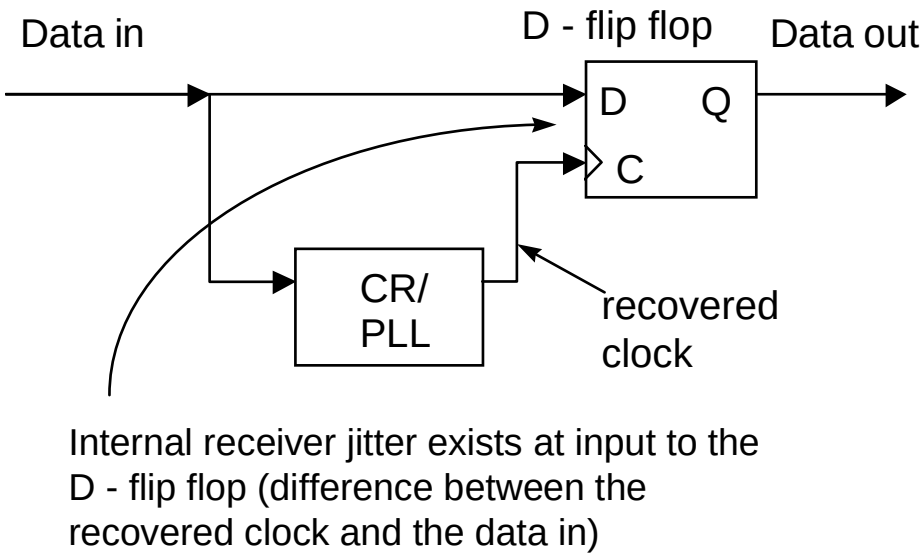

Figure 25 - Block diagram for a serial receiver with clock and data recovery

A PLL typically has a low-pass phase modulation frequency tracking response function $H_L(f)$ with roughly the characteristics shown in figure 26.

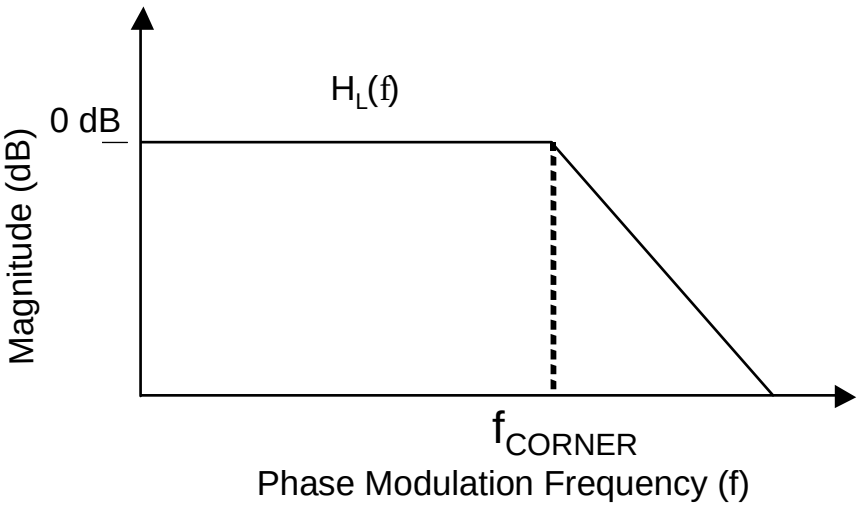

Figure 26 - A typical PLL phase modulation frequency tracking response

Any good signal measurement methodology should emulate the actual device behavior. The measurement setup should be such that it measures the jitter in the same way as it would affect the receiver. A receiver detects bits based on the timing of its recovered clock with respect to the data, therefore this timing is a difference function from recovered clock to data, as shown in figure 27. The measurement of jitter on the sig-

--`,,```,,,,````-`-`,,`,,`,`,,`---
Copyright International Organization for Standardization
Provided by IHS under license with ISO
No reproduction or networking permitted without license from IHS
Not for Resale

nal is executed with a measurement system (see figure 27) that is functionally identical to the receiver (see figure 25). The data latch function of “D” flip-flop in figure 25 is replaced by the time difference function to emulate the receiver jitter behavior.

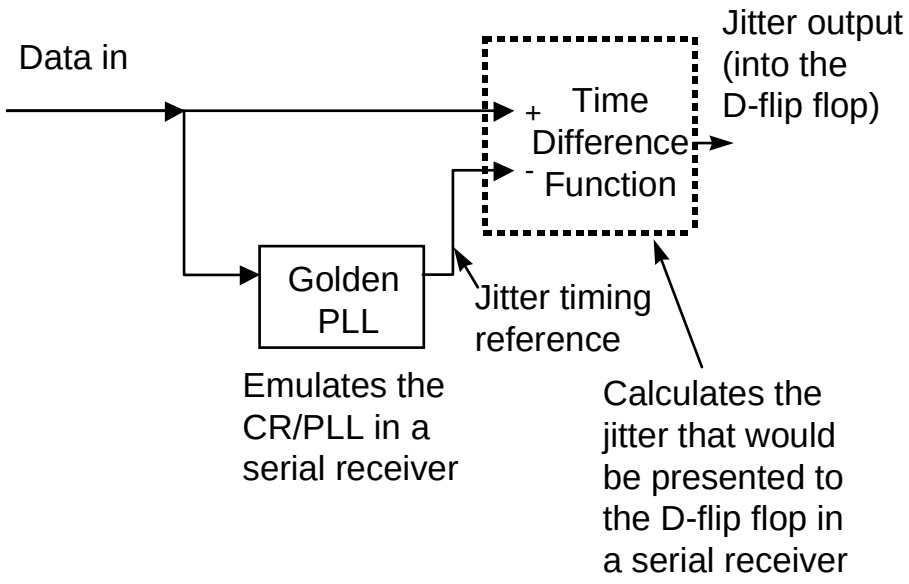

Figure 27 - Schematic of a basic measurement system

If the data edge occurs before the jitter timing reference the jitter out is negative.

The PLL has a low-pass transfer tracking function H_L (f). The time difference function is given by 1 - H_L The time difference function has the form of a high-pass transfer function H_H (f) as shown in figure 28. In general the vector sum H_L (f) + H_H (f) = 1.

H_H (f) may actually attain values slightly higher than unity (‘peaking’) in the vicinity of the crossover frequency because of the time delay (phase shift) through the PLL. Our current delay specifications do allow about 0,3 dB of peaking. The delay matching should be from the point the Golden PLL taps the signal to the inputs of the actual sampler function. Any relative delays anywhere within those paths contribute to the delay and in the case of some instruments, there may be delays not due to the Golden PLL at all (such as internal scope trigger delays).

Copyright International Organization for Standardization
Provided by IHS under license with ISO
No reproduction or networking permitted without license from IHS Not for Resale

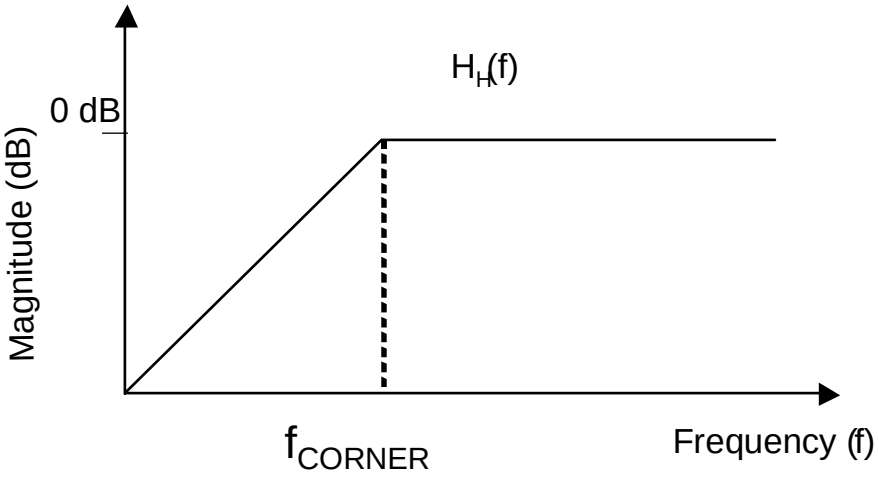

Figure 28 - Phase modulation frequency response of the time difference function

The time difference function shown in figure 28 suggests that a receiver is able to track more low-frequency jitter at frequencies of $f < f_{corner}$ than at higher frequencies of $f > f_{corner}$. This implies that a receiver may tolerate more low-frequency jitter than high-frequency jitter. Assuming that the bit clock frequency expressed in Hz (numerically equal to the signaling rate expressed in baud) is f_c, then f_{corner} is typically set to be $f_{corner} = f_c/166\ 7$. This is the case for Fibre Channel (FC), SAS and others. Gigabit Ethernet (GBE) uses 637 kHz at a signalling rate of 1,25 GBd. Sonet uses $f_{corner} = f_c/250\ 0$.

Most serial data standards specify the slope as 20 dB/decade. If the clock recovery device (or Golden PLL) has the characteristics required by the standard for $H_L(f)$ response, then the clock-to-data jitter measurement emulates the receiver jitter behavior.

The jitter timing reference shall be synthesized from the data stream by passing the time phase information from the data stream through the Golden PLL that incorporates both the high and low-frequency responses according to the spectral mask requirement shown in figure 29. The reported jitter is the difference between the output of the Golden PLL and the signal (at the appropriate signal level threshold). The jitter timing reference may be implemented in hardware, as shown in figure 27, or by post processing of the acquired data. The properties of a hardware implementation are described in 6.10.2.

If post processing is used to include the required Golden PLL frequency response properties in the reported jitter, the timing reference for the instrument used to acquire the raw data may be derived from the source clock that generated the signal, from a pattern marker in the data stream, from the same bit in a repeating pattern or from a clock synthesized from sampling a long series of bits.

If the corner frequency is too low or if frequency tracking is not implemented in the signal measurement, the measured signal will typically appear more degraded, due to more low-frequency jitter (drift) being present in the measured signal, than would be measured with the Golden PLL response or by the real receiver. Signals calibrated in this way make the receiver tolerance appear better than it should. If the corner frequency is too high then the measured signal will appear with less jitter than it should.

Similarly, if the high-frequency response is not implemented in the signal measurement then the signal measurement will not show the jitter content seen by the receiver such as when the transition density changes abruptly as in the CJTPAT. The signal will appear better than it should.

Copyright International Organization for Standardization
Provided by IHS under license with ISO
No reproduction or networking permitted without license from IHS Not for Resale

By adding appropriate guardbands, determined by characterization of representative samples tested with and without the Golden PLL, it may be possible to eliminate the use of the Golden PLL for pass-fail applications but this is beyond the scope of this document.

Even if the specified Golden PLL is used for measuring the jitter, the measured bit error ratio in a link may be significantly different from the jitter population that exceeds the specified limit in the signal. This is caused by receivers having different frequency and amplitude response from that specified for the Golden PLL used to measure the signal quality. Receiver designers should consider how the signal quality measurement is specified when executing the designs. See 6.13.

Jitter output measurements shall be done with a Golden PLL that meets the passband characteristics found in figure 29. The plot in figure 29 depicts the asymptotic response. The actual response should be -3 dB (0,707) at f_c/1 667.

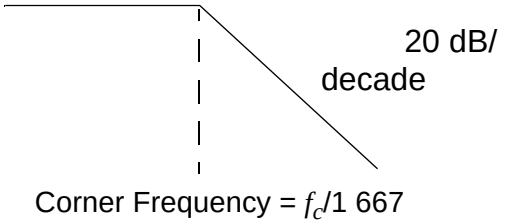

Figure 29 - Single pole low-pass filter passband characteristic for a Golden PLL

Contributors to low-frequency jitter include but are not limited to: source drift, low-frequency sinusoidal noise and other uncorrelated effects occurring below a lower cutoff frequency. Low-frequency deterministic jitter may also be caused by broadband changes in transition density coupled with ISI mechanisms.

If the jitter out is plotted against bit position in a data pattern the format may be presented in a way similar to that shown in figure 30. In figure 30 the jitter measurement system emulates jitter as seen by a serial data receiver.

Figure 30 shows the measured jitter at the nominal threshold crossing point in an ISI intensive link, using a pattern marker method with averaging around each transition point, with two different receiver response functions. This method records only the DDJ and the DCD. See 7.2.3. The unfiltered trace is what one would obtain if, for example, a BERT timing reference (external reference clock) were used. The filtered trace is obtained by using a high-pass function with a corner frequency of bit clock (baud) / 1 667 that is intended to emulate the frequency response of the receiver. One may implement this function by using the Golden PLL specified in 6.10 or apply a high-pass filter function meeting the same criteria to the data stream as was done in Figure 30 using a TIA.

Note that immediately after the change from the low transition density section to the high transition density that the highest negative peak is found when using the filter. The highest positive peak is found immediately after the change from the high transition density section to the idles section using the filter. The filtered peak-to-peak value is 30 % to 40 % higher than the unfiltered value. Up to twice the difference between the filtered and unfiltered measurements have been reported for other similar measurements.

--`,,```,,,,````-`-`,,`,,`,`,,`---

Copyright International Organization for Standardization
Provided by IHS under license with ISO
No reproduction or networking permitted without license from IHS Not for Resale

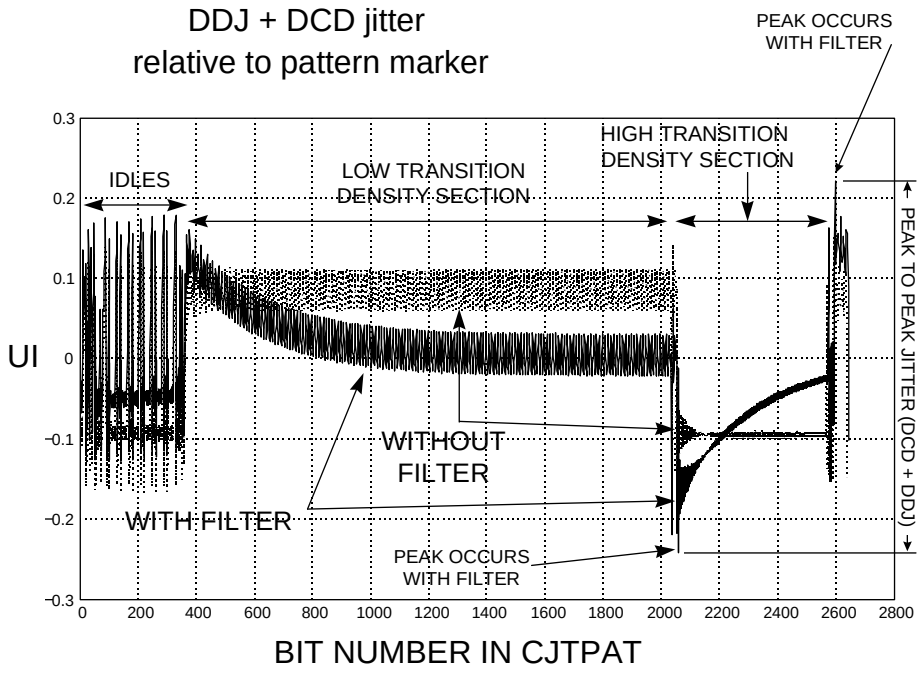

Figure 30 - Example of DJ effects caused by rapid transition density changes in CJTPAT

Copyright International Organization for Standardization
Provided by IHS under license with ISO
No reproduction or networking permitted without license from IHS
Not for Resale

6.10.2 Performance specification for a hardware implementation of a Golden PLL

Table 1, table 2 and table 3 define the properties needed for a hardware implementation of a Golden PLL.

Table 1 - Input characteristics for a Golden PLL

Parameter	Units	1,062 5 GBd	2,125 GBd	4,25 GBd
Data rate, NOTE 1	MBd	1 062,5	2 125	4 250
Data rate tolerance	ppm	+/- 100	+/- 100	+/- 100
Data encoding		8b10b	8b10b	8b10b
Differential input signal amplitude				
Maximum	mV peak-to-peak	2 500	2 500	2 500
Minimum	mV peak-to-peak	50	50	50
Return Loss between lower and upper frequency limits				
Minimum	dB	20	20	20
Lower frequency limit	MHz	10	10	10
Upper frequency limit	MHz	2 000	4 000	8 000
Input rise/fall times 20 % to 80 %, NOTE 2				
Maximum	ns	2	1	0,5
Minimum	ns	0,05	0,025	0,012 5
Max input Jitter f > fc/1667, NOTE 3, NOTE 4				
Data-Dependent (DDJ)	UI peak-to-peak	0,38	0,38	0,38
Sinusoidal (SJ)	UI peak-to-peak	0,10	0,10	0,10
Random (RJ)	UI at 1E-12	0,6	0,6	0,6
Total Jitter, all sources	UI at 1E-12	0,70	0,70	0,70
Other requirements				
Input impedance	Ω, nominal	50	50	50
Frequency response low-frequency corner	kHz	10	20	40

NOTE 1 It is desirable that the 1 062,5 MBd unit also be able to operate at 1 250 MBd to support Gigabit Ethernet testing.

NOTE 2 Measured with square wave at {data rate/10} Hz or equivalent.

NOTE 3 As measured with an ideal Golden PLL.

NOTE 4 DDJ + RJ shall not exceed 0,6 UI.

--`,,```,,,,````-`-`,,`,,`,`,,`---

Copyright International Organization for Standardization
Provided by IHS under license with ISO
No reproduction or networking permitted without license from IHS Not for Resale

Table 2 - Output characteristics for a Golden PLL

Parameter	Units	1,062 5 GBd	2,125 GBd	4,25 GBd
Frequency, NOTE 1		exactly the same as the average input frequency		
Amplitude, NOTE 2	mV peak-to-peak,	1 000 +/- 30 %	1 000 +/- 30 %	1 000 +/- 30 %
Output waveshape		binary or sinusoidal as desired		
Output Impedance	Ω, nominal	50	50	50
Output return loss, sine, NOTE 3				
Minimum	dB	12	12	12
Lower frequency limit	MHz	900	1 800	3 600
Upper frequency limit	MHz	1 200	2 400	4 800

NOTE 1 This is the whole purpose of the phase-locked loop.

NOTE 2 AC coupled.

NOTE 3 If the 1 062,5 MBd unit also handles 1 250 MBd, the upper frequency limit becomes 1 400 MHz.

Copyright International Organization for Standardization
Provided by IHS under license with ISO
No reproduction or networking permitted without license from IHS Not for Resale

Table 3 - Jitter transfer characteristics for a Golden PLL

Parameter NOTE 1	Units	1,062 5 GBd	2,125 GBd	4,25 GBd
Function shape		identical to a single-pole low pass		
Corner frequency NOTE 2	kHz	637,5 +/-5 %	1 275 +/-5 %	2 550 +/-5 %
High-frequency response, NOTE 3				
f1	kHz	637,5	1 275	2 550
f2	MHz	20	40	80
f3	MHz	531	1 063	2 125
Amplitude congruence to single-pole high-pass filter, NOTE 4	dB	+/- 0,1 from DC to f1 +/- 0,5 from f1 to f2		
Frequency response	dB	<-40 from f2 to f3		
Maximum delay from input phase step to output (see figure 31)	ns	10	5	2,5
Maximum output jitter not attributable to input jitter				
Random	ps, rms	2	1	1
DJ	ps, peak-to-peak	12	6	3

NOTE 1 All specifications are operative with a transition density of 50 %, a typical figure, but this is not necessarily always the case.

NOTE 2 If the 1 062,5 MBd unit also handles 1 250 MBd, the corner frequency shall remain at 637 kHz.

NOTE 3 If the 1 062,5 MBd unit also handles 1 250 MBd, the amplitude congruence frequencies may remain the same as for 1 062,5 MBd.

NOTE 4 Congruence is the absolute difference at any frequency.

Figure 31 shows the response from a candidate Golden PLL and a CDR compared to the input signal at 1,062 5 GBd. The data pattern is ISI intensive and consists of 200 D30.3s and 200 D21.5s. The candidate Golden PLL has a delay of approximately 140 ns and therefore does not meet the 10 ns maximum delay from input phase step to output requirement at 1,062 5 GBd. The CDR shown is 720 kHz at Transition Density = 0,5 and almost meets the delay specifications (15 ns compared to a requirement of 10 ns).

Copyright International Organization for Standardization
Provided by IHS under license with ISO
No reproduction or networking permitted without license from IHS
Not for Resale

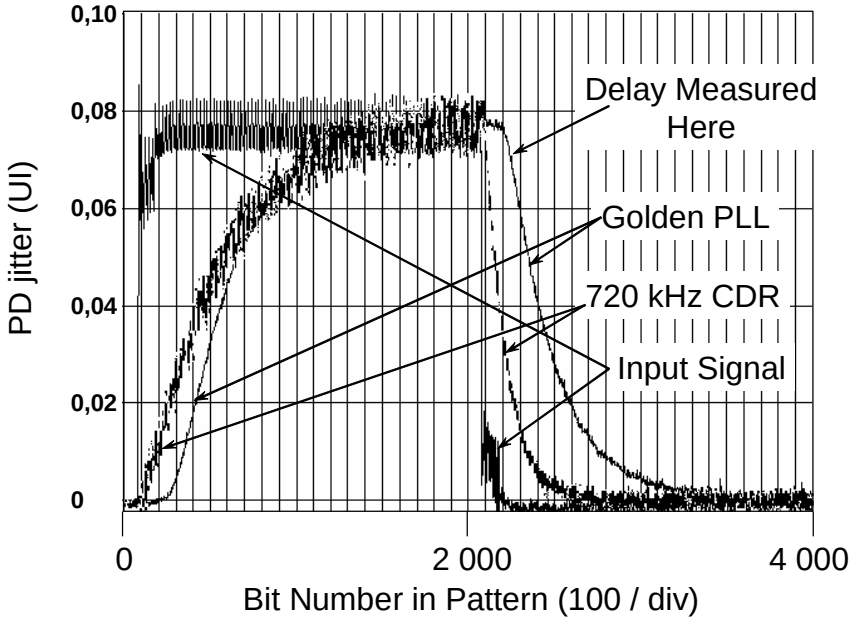

Figure 31 - Golden PLL delay property

Hardware Golden PLLs may be verified by using the configuration, as shown in figure 27, with a jitterless data source. The time difference function reports the jitter contribution of the Golden PLL. Since jitterless sources may be impractical, an independent calibration of the jitter in the data source may be done and accounted for in the time difference function.

Care is required to minimize the distortion from tapping the signal under measurement with the Golden PLL. Tapping is discussed in Annex A and examples are shown in clause 14. If the Golden PLL function is executed in software this issue does not exist.

6.11 Jitter frequency concepts

A concept of jitter frequency is sometimes useful for specifying the spectral content of the jitter for example. A jitter event itself is just a number measured in units of time and has no intrinsic frequency properties. However, when a continuous stream of data is present one may plot the discrete jitter event values (deviation from the jitter timing reference) versus bit number or time for a sequence of adjacent bits.

The result appears much as a sampled waveform would appear on a sampling oscilloscope except that the time intervals between jitter events is generally not uniform due to non clock-like data patterns. In order to convert to frequency using FFT methods some type of interpolation is used to fill in the gaps where there is no signal transition between bits. This interpolated sampled jitter waveform may be analyzed by the same methods used on any sampled waveform. The jitter frequency is the frequency associated with some part of the FFT. For signals that have only a single tone sinusoidal jitter content, the jitter frequency is that of the tone.

Validity of the jitter frequency concept is similar to the validity of the frequency content derived from any sampled signal. When there are many samples per period validity is high. As the number of samples per period decreases the validity reduces. Jitter frequency in this document may be assumed to be much less than the fundamental operating frequency of the link for low-frequency tracking purposes or may be high when constructing a jitter frequency spectrum from an FFT.

Copyright International Organization for Standardization
Provided by IHS under license with ISO
No reproduction or networking permitted without license from IHS
Not for Resale

6.12 Jitter output measurement methodologies

6.12.1 Time domain

The following methods are described for making jitter output signal quality measurements in the time domain:

a) **Equivalent Time (ET) Oscilloscope** – uses a jitter timing reference signal derived from the data stream via a Golden PLL to trigger an equivalent time sampling oscilloscope. An analog signal eye diagram and waveform mask (not to be confused with a jitter eye mask that is based on the CDF at the 10^{-12} level) is created. The DCD component and the high probability DDJ component of DJ may be extracted. A version that is optimized for jitter measurements is described in clause 10.

b) **Time Interval Analysis (TIA)** – based on accurate measurement of the time interval between signal crossings at a defined signal level of the signal. The jitter timing reference, including the required Golden PLL properties, is created within the instrument from the input signal for some methods. Others require the Golden PLL. RJ, DJ and BER are calculated within the instrument using the methodologies defined in MJSQ from the time intervals measured.

c) **BERT scan** - based on comparing detected data at a predefined signal threshold and strobe time with the expected data. The jitter timing reference signal is derived from the data stream via a Golden PLL and is used as the strobe time reference. The signal level and strobe time are retained constant until an error ratio at the set conditions is determined. The strobe time is scanned across the bit time to directly measure the value of the CDF at each strobe position. For statistical validity, a target number of errors is required at each strobe position before moving to the next position.

d) **Real-Time (RT) Oscilloscope** – based on over-sampled Real-Time oscilloscope measurements. A real-time eye diagram and waveform mask (not to be confused with a jitter eye mask that is based on the CDF at the 10^{-12} level) is created. In addition, a method is described for estimating RJ, DJ and BER using a spectrum approach.

More detail on these methods is in clause 10.

6.12.2 Frequency domain

Frequency domain measurements are based on spectrum analyzer measurements with clock-like data patterns. They may be useful for diagnostic applications (level 2, see 13.1) but are not suitable for total signal quality specification. See Annex A for more information.

6.13 Effects of varying jitter distributions on BER

As shown in 6.10 the distribution of the jitter population may affect the way the receiver sets its internal timing reference that it uses to sample the signal level for purposes of determining whether a logical one or a logical zero is detected. It therefore follows that presenting the same receiver with different distributions will have different outcomes and that if the distribution is not specified, an intrinsic disconnect between the signal quality measurement and the observed bit error ratio in the link results.

There are only limited standardized requirements on receivers that specify how the receiver shall react to different jitter distributions. One constraint is that the sinusoidal portion of the deterministic jitter specified by the jitter tolerance mask shall be tolerated by compliant receivers.

Similarly, there are only limited requirements on the jitter distributions allowable in the signals. The separation of the jitter budget into a deterministic portion and the total places some bounds on the distributions for signals. The distribution within the deterministic portion for signals is presently unconstrained except for the Delta T point. Optical Gamma T jitter is indirectly constrained by the waveform eye mask methodology in OFSTP-4A [8], where the mask location is determined by the mean of the histogram of the jitter population at the receiver threshold.

Fundamentally, this partially constrained distribution methodology for signal specification results in receivers needing to be able to handle any deterministic distribution that may exist within the limits allowed by the budget and causes receivers to be over designed for many applications.

--`,,```,,,,````-`-`,,`,,`,`,,`---
Copyright International Organization for Standardization
Provided by IHS under license with ISO
No reproduction or networking permitted without license from IHS Not for Resale

These effects of distribution have first order impact on the practical methods used for measuring signals. The measurement method shall create a timing reference from the signal. Unless the method used for extracting the timing reference is essentially the same as that used by the receiver for setting its internal timing reference, a difference between the BER of the receiver and the jitter population lying outside the allowed values is expected.

See Annex A for a more detailed discussion on this topic.

6.14 Methodology for jitter and signal quality specification for “processed” signals

6.14.1 Background

It has been recognized for many years that it is possible to compensate for predictable signal degradation caused by the transmission process.

The most popular of these compensations attempt to flatten the frequency response of the interconnect by boosting signals at frequencies where the interconnect attenuates (active filter) and/or by attenuating frequencies where the interconnect has low loss such that the low-frequency loss becomes the same as the high-frequency loss (passive filter). When the attempt is to compensate for non-constant frequency response of the cable plant, the general methodology is called “equalization”.

Other types of compensation may remove skew in differential electrical signaling. Certain filtering in optical receivers may be used to compensate for known high-frequency noise (e.g., relaxation oscillations) from certain types of optical sources. Yet others may apply some optimization scheme within the receiving device that adjusts to the properties of the incoming signal. All of these compensation / optimization schemes are termed “signal processing” in this document.

In all cases except the cable plant, the methodology for measuring the signals takes into account that part of the processing that is expected to be in place. Failure to take the processing into account may make signal quality specification effectively impossible in one extreme and make it significantly misleading in another view.

The general approach to dealing with signal specifications in the presence of transmitter or receiver processing is to emulate the expected processing to the signal before measuring the signal’s properties. To do this intrinsically requires knowledge of the processing that is expected.

6.14.2 Link components that contain compensation properties (equalization)

6.14.2.1 Compensation

Compensation is the attempt to mitigate the deleterious effects occurring during signal transmission by adding or subtracting features from the signal. Compensation may be executed in the transmitter, in the interconnect and in the receiver. Compensation may be applied to properties of the signal that depend on the specific data pattern and to properties that are predictable upon subsequent use such as line-to-line propagation time skew and DCD. The basic assumption for compensation is that the degradation intensity and type remains stable over periods of at least several bit times.

Compensation schemes that may adjust the parameters of the compensating mechanism are termed “adjustable”. Compensation schemes that use active circuitry are termed “active”. Compensation schemes that pass the signal through a transfer function are termed “filtered” or “equalized”, the latter being derived from the common practice of matching the transmission losses across part of the frequency spectrum. Adjustable schemes that change the parameters of the compensating mechanism in response to specific received signal measurements are termed “adaptive”. It is usually assumed that adaptive schemes will use some sort of automatic means to do the adapting.

For purposes of MJSQ only linear, non-adaptive schemes are considered.

The mechanisms of degrading signals fall broadly into two modes: (1) primary losses along the

Copyright International Organization for Standardization
Provided by IHS under license with ISO
No reproduction or networking permitted without license from IHS Not for Resale

transmission path such as attenuation, reflections and resonances and (2) secondary losses due to causes that are external to the transmission path such as crosstalk noise. In some cases the secondary losses may exceed the primary losses. Losses may be in amplitude or timing precision or both.

Details concerning the important differences between the location of the compensation are explored in the following subclauses.

6.14.2.2 Transmitter compensation

Any compensation scheme that is implemented in the transmitter either (a) makes assumptions concerning the nature and intensity of the degradation that occurs during the transmission or (b) has some sort of feedback from the receiver that allows adjustment of the parameters of the compensation scheme. As such a mechanism relies on higher level protocol (as yet not specified) MJSQ does not consider any schemes that incorporate transmitter feedback compensation schemes.

When transmitter compensation is used, the results are visible in the signal launched from the transmitter. However, it may be necessary to use special methods to determine the quality of the signal from the transmitter since the compensation process may significantly alter the signal.

The general method for verifying transmitter compensation is to pass the transmitter signal through a transfer function that emulates the loss mechanism, in both magnitude and phase, for a standard interconnect attached to the transmitter before examining the signal. One measurement set up for such a methodology is shown in Figure 32 where models are used instead of hardware, where possible.

The mathematical description of a compliance interconnect is not a specification for the interconnect itself (although the specifications for the compliance interconnect are derived from assumptions about the interconnect). It is a specification of the load that is placed on the transmitter for purposes of enabling measurement of transmitter signals.

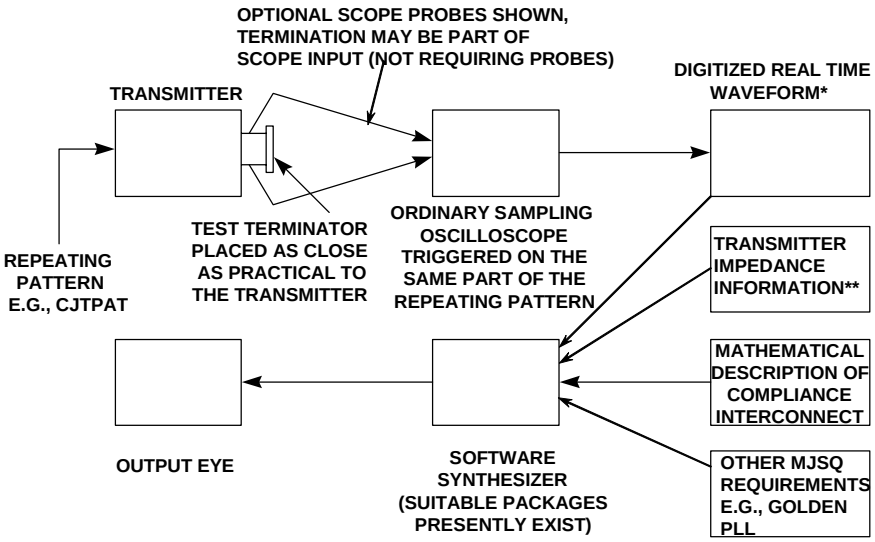

Figure 32 - Measurement set-up for evaluating transmitters

It is also possible to evaluate the transmitter by using a golden physical sample of compliance interconnect attached to the transmitter. In this case the mathematical description of the compliance interconnect is built

Copyright International Organization for Standardization
Provided by IHS under license with ISO
No reproduction or networking permitted without license from IHS Not for Resale

into the golden hardware and direct observation of the output eye is possible without the software synthesizer. Even in this case the specification for a physical compliance interconnect is not the same as the specification for the link interconnect where a much more complete set of requirements are specified including items such as crosstalk and EMI performance.

6.14.2.3 Interconnect compensation

Interconnect is specified by its ability to transport a minimum quality launched signal to an adequate quality signal coming out of the far end. If compensation is incorporated into the interconnect itself then the interconnect includes the compensation as part of its performance and no special treatment is required.

6.14.2.4 Receiver compensation

Figure 33 shows the basic scheme used to specify input signals for devices whose internal circuity (receiver itself or other circuitry) incorporates compensation. If this compensation is included as part of the link budgeting process the effects of this compensation must be visible at the connector where the interoperability specifications apply. In an extreme example the signal may exhibit no jitter eye opening and/or no waveform eye opening at all at the connector unless the effects of the compensation are included in the signal measurement process. The device itself is evaluated based on its ability to produce small error ratios with a minimum quality incoming signal. This evaluation demands the ability to specify and calibrate a signal at the interoperability point for use with signal tolerance measurements.

Since the device with the receiver processes the signal internally, the observed signal at the connector needs to be processed to emulate the internal signal in the device at point “A” during the signal measurement. This is done by passing the signal at the connector through a standard compensation transfer function (possibly, but not necessarily, the same as that used internally in the device) before evaluating the signal. The standard compensation transfer function is that assumed when creating the link budgets. Real receivers need not implement exactly the same function or method but the properties of the signal used for signal tolerance measurements are known and the device may be designed to work with this signal. The standard compensation function allows

a) Visibility of the signal properties at the receiver device interoperability point
b) Use of the same signal quality specification methodology as for non-compensated signals
c) Link budgeting to be done without compromising the ability to do proprietary receiver designs.

For signal tolerance testing the signal observed downstream of the standard compensation function is then adjusted to have the properties of a minimum quality signal. This calibrated signal then applied to the device and the device bit error ratio is measured. Bit errors are detected at point “B” after passing through the internal receiver.

Copyright International Organization for Standardization
Provided by IHS under license with ISO
No reproduction or networking permitted without license from IHS Not for Resale

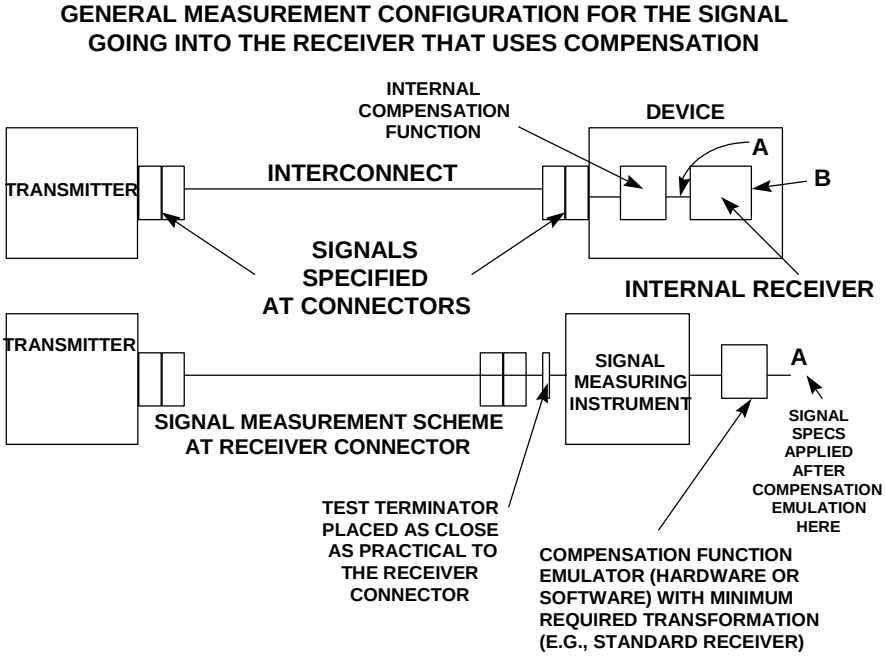

Figure 33 - Measurement set-up for evaluating receivers

Since the measurement system shown in figure 33 is linear, one could place the compensation function before the signal measurement instrument by using a hardware version of a golden receiver signal processor. In all cases, specification of a standard compensation function is required.

6.15 Determination of compliance

Signal quality compliance is determined by the standard that specifies the requirements. The MJSQ document does not alter the specifications in existing standards in any way. However, it is possible that existing standards may not have fully considered the requirements for predicting link bit error ratio performance from signal quality measurement. The more complete approach taken in this document is now available for consideration and adoption by the various governing standards' bodies to reduce that risk.

The requirement for no more than a single event being recorded within the same bit time as described in 6.3 allows direct application of population requirements specified at the nominal receiver threshold crossing to the population requirements at every signal level within the range of the maximum and minimum values of the eye opening. If you require no more than 1E-12 within the eye at the nominal receiver crossing level then you require no more than 1E-12 within the eye at any other signal level where there is a finite eye opening as well, but the time values applicable to the other signal level will be determined by the eye mask values at that signal level.

The jitter eye opening specification may require modification if compensation schemes are used in the transmitted signal or in the receiver, see 6.14. If modifications to the jitter eye opening specification are used then the modified jitter eye opening shall be used to determine the population at each signal level.

The jitter population at every signal level shall be determined using the methodologies specified in 6.4, 6.8 and 6.10.

Compliance to a more general jitter population specification that considers different signal levels requires that the jitter population at every signal level be less than that allowed for the bit error ratio for the link.

Copyright International Organization for Standardization
Provided by IHS under license with ISO
No reproduction or networking permitted without license from IHS Not for Resale

For electrical links, the masks and specifications shown in FC-PI-n apply to special test loads - not to the system in operation - and they apply at all interoperability points, not just for the transmitter. However, for signal tolerance measurements (e.g. receiver response properties) the link downstream from the interoperability point shall tolerate the worst case signal. This is accomplished by setting up the signal from an instrumentation quality source into a special test load with nearly ideal termination. The test load is then replaced with the downstream link under test and the BER from the receiver is measured. Any departure from ideal termination in the downstream link under test will further degrade the signal but does not change the requirements on the signal tolerance for the downstream link. In this way the downstream link is appropriately penalized for not having good termination. For receiver testing the downstream link consists of only the receiver. Signal output requirements are specified in the context of measuring with a test load placed at the interoperability point.

6.16 Extremely stressful data patterns and scrambling

As shown in figure 30, some data patterns are capable of producing high stress in the receiver under some conditions. For example, the CJTPAT is capable of producing 30 % to 40 % greater DDJ + DCD compared to CRPAT or repeating K28.5's in dispersion related ISI dominated links. These stress conditions are possible in compliant frames and are a legitimate way to stress the transmission process.

Annex A contains descriptions of several data patterns that contain various types of stress conditions.

Even more stressful conditions may exist when scrambling is used on encoded data streams after encoding. Scrambling is sometimes used in an attempt to limit the peak energy at any specific frequency for EMI management purposes. This occurs because the deterministic nature of the code (8b10b for example) is eliminated by the probabilistic nature of the scrambling. However, an undesirable side effect with probabilistic coding schemes is that it is statistically possible to produce very unusual bit pattern relationships and excessive run lengths. One therefore needs to consider the probability of truly excessive stress resulting from the probabilistic nature and the allowed error ratio.

MJSQ does not include any methodologies that specifically accommodate effects caused by scrambled transmissions.

If scrambling is done before encoding into 8b10b then only the payload data is scrambled and the run length is limited by 8b10b. However, the spectral distribution in the transmitted data stream will be changed by the scrambling so one cannot assume that the link stresses caused by the data stream, notably those that are caused by transition density changes, are the same as without scrambling. In this case it is necessary to pre-unscramble before transmission so that the 8b10b characters required by the pattern are actually present on the transmission media and are presented to the CDR as specified.

Annex A contains more information concerning low probability issues.

7 Jitter causes and jitter distribution

7.1 Jitter contribution elements

The implementation examples in figure 9 shows several elements that degrade signal quality or enhance signal quality and ports that re-time to a local clock. The typical effect of each of these elements on signal quality is summarized in table 4.

7.2 Jitter distribution

7.2.1 Basic types - Bounded and unbounded, correlated and uncorrelated

For ease of analysis this document divides jitter into two basic types: bounded and unbounded. The jitter distribution consists of combinations of bounded and unbounded components. The total jitter is the time interval where all but a specified fraction of the population falls. The specified fraction is frequently 10^{-12}. The allowed total jitter varies with signal level. Total jitter is abbreviated TJ.

Subclause 7.2 describes the bounded and unbounded types in more detail.

Copyright International Organization for Standardization
Provided by IHS under license with ISO
No reproduction or networking permitted without license from IHS Not for Resale

Table 4 - Signal quality contribution elements

Element	Typical effect on signal	Description
FC Ports / other protocol aware PMD sublayer Ports	Originating signal source - defines the quality of the launched signal - used as the signal quality reference for other points in the transmit/receive connection	A fabric Port that launches a signal with original jitter and amplitude content. Generally amplitude decreases and jitter increases during the transmission process. A full FC-AL Port also launches a signal with original jitter and amplitude content by amplifying and re-timing the incoming signal to its local clock. An elasticity buffer is included that absorbs the worst-case frequency mismatch between the receive data (recovered clock) and the local clock for the maximum frame length.
Retimer repeater	Originating signal source - defines the quality of the launched signal - used as the signal quality reference for other points in the transmit/receive connection	A re-timer is a serial data in and serial data out node that re-times data to a local transmit clock. The use of a retimer element has the same effect on resetting the jitter and amplitude budget as an FC Port. An elasticity mechanism is included that absorbs the worst-case frequency mismatch between the receive data (recovered clock) and the local transmit clock for the maximum frame length.
Reclocker repeater	Amplify amplitude, attenuate jitter, restores rise and fall time	A reclocker repeater or ‘reclocker’, is a serial data in and serial data out node that attenuates jitter by re-generating the serial data using the recovered and filtered bit clock derived from the incoming data stream and resets the launch amplitude typically by amplifying.
Amplifier repeater, buffer element (e.g., limiting amplifier)	Amplify amplitude, increase jitter, restores rise and fall time	An amplifier repeater, or ‘amplifier; amplifies the incoming signal, but typically transfers all the jitter present at the input to the output and may introduce additional jitter through duty cycle distortion, crosstalk, power supply noise and data dependent jitter. Duty cycle distortion may be exacerbated or reduced depending on the direction of the duty cycle distortion.
PMD repeater	Change signal type, effect on jitter depends on the type of repeater	Circuits for converting or coupling serializer output to transmission media or transmission media to deserializer input. Behaves like amplifier, reclocker or retimer depending on design.
Passive equalizer	Attenuate jitter, may increase usable amplitude	A passive filter that improves signal quality by compensating the frequency dependent effects of a bandwidth limited medium. Although the peak amplitudes are attenuated due to the passive nature of the filter, the usable signal may have significantly greater amplitude due to the reduction in jitter.
Transmission media	Attenuate amplitude, increase jitter	Fibre optics or electrical cables attenuate amplitude due to losses and increase intersymbol interference (ISI) jitter due to dispersion. May also increase jitter and/or decrease amplitude through crosstalk, reflections and resonances.
Connector	Attenuate amplitude, increase jitter	Electrical and optical connectors introduce reflections, crosstalk and attenuation that causes loss of transmitted amplitude and increased jitter.

The jitter distribution is the histogram of all the jitter components in the data stream.

Jitter that has a defined timing relationship with a specific data edge in a repeating data pattern for the signal under test is correlated to the data pattern. Jitter that does not have such a defined relationship is

Copyright International Organization for Standardization
Provided by IHS under license with ISO
No reproduction or networking permitted without license from IHS Not for Resale

uncorrelated. Uncorrelated jitter has a mean value of zero with respect to the same signal edge in a repeating data pattern.

7.2.2 Unbounded (definition, concept, quantitative description)

Unbounded jitter has the property that some finite population exists at all values of jitter (assuming an infinite sample size). Unbounded jitter of practical interest to MJSQ has a Gaussian distribution.

The word ‘random’ is sometimes used correctly to describe Gaussian jitter and is sometimes used incorrectly to describe jitter in general. Unbounded jitter or random jitter, is abbreviated RJ and is uncorrelated to anything.

7.2.3 Bounded (definition, concept, quantitative description)

7.2.3.1 Overview

Bounded jitter has the property that no population exists beyond specific limits regardless of the number of events obtained.

All bounded jitter is deterministic (by definition) and all unbounded jitter is Gaussian. The word ‘deterministic’ does not exclusively apply to data dependent jitter. Data dependent jitter is one of the classes of deterministic jitter. The word ‘deterministic’ implies that something determines the value of the jitter and the word is retained in this document because of common usage. If jitter is deterministic, it may or may not come from a known cause.

Bounded jitter consists of one or more of the following classes: duty cycle, applied sinusoidal, data dependent and uncorrelated (to the data stream in the link under test). Bounded jitter, or deterministic jitter, is abbreviated DJ and may or may not be correlated to the data pattern used on the signal under test. DJ is commonly used for compliance and budgeting as a level 1 quantity.

7.2.3.2 Duty cycle distortion (correlated)

Duty cycle distortion jitter (DCD) has the dual Dirac delta function distribution and is due to different pulse widths for logical “1” signals compared to logical “0” signals. Duty cycle distortion jitter is most easily observed in a clock-like data pattern. DCD is synchronous to the data pattern and is considered to be correlated to the data pattern in the signal being measured even though DCD does not change with changes in the data pattern. There are also benefits from using arbitrary data with DCD definition 2, see 3.5.30.

DCD is compensatable in principle by inversing the DCD.

7.2.3.3 Data dependent (correlated)

7.2.3.3.1 Overview

Data dependent jitter (DDJ) is jitter that varies if the data pattern changes. The data is strictly the data transmitted in the same path as the signal being measured. Data on other paths contribute to crosstalk jitter and is not considered data dependent in this document. Data dependent jitter is abbreviated DDJ and is commonly caused by ISI.

ISI is a general term for one signal feature causing a distortion in the signal away from the signal feature itself. For example, if the signal feature is a signal edge the ISI distortion may be seen in the neighboring signal edges, in the nominally stable portion of the signal or far away from the signal edge. The ISI distortion is predictable and is correlated to the data pattern. The signal distortion is the ISI and the jitter that results from that distortion is the DDJ component.

The details of the link determine where and how the distortion exists. ISI commonly is caused by high-frequency dispersion, reflections, low-frequency coupling or control components and other mechanisms related to the frequency response of the link. The three most common forms of jitter that result from the different ISI mechanisms are identified as follows: dispersion induced jitter (signal edge roll off occurring during signal transmission), reflection induced jitter and baseline wander induced jitter. Other less important forms of ISI induced DDJ are also possible. For example, in differential electrical links common mode

Copyright International Organization for Standardization
Provided by IHS under license with ISO
No reproduction or networking permitted without license from IHS Not for Resale

reflections may create differential noise with resulting jitter in the differential signal. Because the manifestation of ISI is widely varying depending on the causal mechanism the term 'ISI induced jitter' is not as useful as referring to the causal mechanisms directly.

ISI induced jitter is compensatable in principle by inverting the high-frequency response properties of the link that caused the ISI. The compensation required will be significantly different depending on the causal mechanisms and the intensity of the distortions.

DDJ may also be caused by non ISI mechanisms such as power supply noise on the transmitter device that correlates to the data pattern and ground bounce.

It is possible that any ISI mechanism may be affected by crosstalk (crosstalk is an uncorrelated mechanism). For example, crosstalk may affect the differential and common mode impedance of the signal path under test or may affect the shape of the original signal edge that caused the ISI. In this case, the crosstalk is affecting the jitter in the signal under test and introducing some BUJ via an ISI mechanism. The ISI mechanisms that apply to DDJ are only the correlated portions.

7.2.3.3.2 Dispersion induced jitter

Dispersion induced jitter (DIJ) is a form of DDJ caused by signal edge dispersion or roll off in the signal transmission process. Dispersion causes ISI effects that produce correlated deterministic jitter. DIJ is most important for long lossy links. Historically, some people have referred to DIJ as being the same as DDJ and it is common for people to use the term ISI and DDJ interchangeably. MJSQ uses these terms more carefully.

7.2.3.3.3 Reflection induced jitter

Reflection induced jitter (RIJ) is a form of DDJ caused by reflections in the signal transmission process. Reflections cause ISI effects that produce correlated deterministic jitter. RIJ is most important for short, low loss links with poor return loss in the transmitter device or the receiver device or both.

7.2.3.3.4 Baseline wander induced jitter

Baseline wander induced jitter (BWJ) is a form of DDJ caused by by inadequate low-frequency response in a link. One good example is the use of a.c. coupling components, such as an RC circuit, where the low-frequency corner is too high. The transfer function of the coupling circuit causes ISI effects that produce correlated deterministic jitter. Another good example is where the loop bandwidth of an average power laser diode control circuit is too high.

7.2.3.3.5 High probability DDJ

High probability data dependent jitter (HPDDJ) is DDJ jitter that comes from relatively short data patterns. In 8b10b FC the longest data pattern presently defined for measurement purposes is CJTPAT that has 2640 bits. HPDDJ is defined for this document as DDJ resulting from the CJTPAT and shorter data patterns.

7.2.3.3.6 Low probability DDJ

Low probability data dependent jitter (LPDDJ) is DDJ that is associated with patterns having repeating structures longer than CJTPAT. Encoding schemes and associated data patterns such as scrambling and 64/66 encoding may require dealing with LPDDJ. For data patterns that have no significant population of LPDDJ, existing equipment is expected to be able to practically acquire sufficient data. Extrapolation to 10^{-12} CDF levels may be significantly in error if data patterns with LPDDJ are used. To avoid these extrapolation errors direct measurement at 1E-12 levels may require BERT methodologies. A more detailed discussion of low probability issues is contained in Annex A.

7.2.3.4 Uncorrelated DJ

7.2.3.4.1 Overview

Uncorrelated DJ, (BUJ) is the part of the deterministic jitter that is not aligned in time to the HPDDJ and DCD in the data stream being measured. There are three main sources of BUJ, (1) power supply noise

Copyright International Organization for Standardization
Provided by IHS under license with ISO
No reproduction or networking permitted without license from IHS Not for Resale

that affects the launched signal, (2) crosstalk that occurs during transmission and (3) sinusoidal applied to the receiver input for jitter tolerance measurements. Clipped Gaussian distributions caused, for example, by active circuits is also considered BUJ. BUJ usually is high population DJ, with the possible exception of power supply noise and the 'tails' of clipped Gaussian distributions.

BUJ may or may not be compensatable. Inversing the PJ peaks in the BUJ frequency distribution may be partially effective.

7.2.3.4.2 Power supply noise

Jitter in the launched signal caused by power fluctuations within the transmitting chip is the power supply induced BUJ. Power supply noise may also affect the BER produced by receivers but in this case does not directly affect the methodologies for making signal quality measurements.

7.2.3.4.3 Crosstalk / external noise

Jitter caused by crosstalk from adjacent lines or from other sources not part of the transmission path under test is crosstalk jitter. Power supply noise from supplies other than that used for the launched signals are unlikely to couple into the signal under test because of the low frequency of the power supply (including switching power supplies). Such coupling, if any, is conductive and affects the power supply for the launched signal. Since most crosstalk comes from adjacent lines or from other high-frequency sources, the populations of crosstalk jitter is expected to be relatively high ($> 10^{-6}$) even though the crosstalk noise may only occasionally have a phase match to the signal transition in the signal being measured. The fraction of transmitted bits that are significantly affected by crosstalk from adjacent uncorrelated links is typically >1E-6. Crosstalk that comes from low-frequency or only occasionally occurring conditions (like lightning strikes) may cause low population DJ (i.e., low population BUJ). Crosstalk may or may not have discrete spectral peaks and so may be difficult to isolate from RJ.

7.2.3.4.4 Applied sinusoidal

Applied sinusoidal jitter consists of a sequence of jitter events that vary sinusoidally as one moves from one signal edge to the next signal edge, reaches a peak and then decreases again. The sinusoidal jitter oscillates with a frequency significantly less than the data rate of the signal under test. Sinusoidal jitter is abbreviated SJ. PJ (periodic jitter) is not a type of jitter but rather is a way to describe peaks in the jitter frequency spectrum of residual jitter.

Sinusoidal jitter may be purposefully launched in the signal for jitter tolerance measurement for example or may be induced into the data stream by crosstalk mechanisms.

7.2.4 Residual jitter and variance record

Jitter that remains after the DDJ and the DCD is removed is called residual jitter. Residual jitter is important because several practical measurements methodologies are capable of determining the DDJ and DCD. Extraction of the RJ intrinsically involves working with residual jitter.

Residual jitter consists of RJ and BUJ. Properties of residual jitter include:

a) Uncorrelated to the data patterns
b) Is the focus for calculating total jitter
c) Unbounded because residual jitter includes RJ
d) Contains all the low population events

Residual jitter is a key differentiator amongst various measurement methodologies because the population of residual jitter events may be sparse. Removing the DDJ and the DCD increases the noise margin available for determining total jitter.

The square of the standard deviation of the residual jitter distribution for a specific signal edge is the variance for that edge. The collection of variance values for consecutive edges is the variance record for that data stream. Variance records are useful for producing FFTs (i.e. power spectrum) of the residual jitter.

Copyright International Organization for Standardization
Provided by IHS under license with ISO
No reproduction or networking permitted without license from IHS Not for Resale

This power spectrum is especially useful, using existing mathematical algorithms, for separating the PJ, RJ and BUJ.

7.2.5 Summary of jitter taxonomy

Figure 34 shows the terminology and relationships related to jitter distributions.

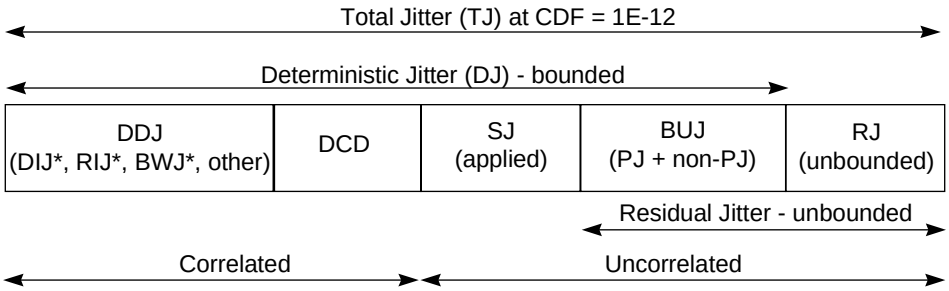

DDJ = Data Dependent Jitter
DCD = Duty Cycle Distortion Jitter
SJ = Sinsoidal Jitter (applied periodic jitter during signal tolerance testing)
BUJ = Bounded Uncorrelated Jitter
RJ = Random Jitter (Gaussian - unbounded)
DIJ = Dispersion Induced Jitter
RIJ = Reflection Induced Jitter
BWJ = Baseline Wander Induced Jitter
PJ = Periodic Jitter refers to spectral peaks in the jitter frequency distribution of BUJ
* Crosstalk may also induce uncorrelated jitter via these mechanisms -
only the correlated portions apply to DDJ

Figure 34 - Taxonomy of jitter terminology and relationships

8 Calculation of jitter compliance values (level 1)

8.1 Overview - Separation of jitter components

Calculations defined in this clause are required to extract the DJ and TJ values that are used for budgeting and compliance. These calculations are derived from the methods used in FC-PI termed ‘equivalent jitter’. The term ‘effective jitter’ has also been used for this same purpose. In this document, the term ‘level 1 DJ’ refers to the level 1 result.

The CDF distribution resulting from the measurement scheme used is the input to the calculations and the method described in this subclause shall be used to calculate DJ and TJ for level 1 uses. Measurement schemes that produce PDF outputs shall convert the PDF distribution to a CDF distribution prior to applying the equivalent jitter calculations. This process is graphically shown in figure 35.

Copyright International Organization for Standardization
Provided by IHS under license with ISO
No reproduction or networking permitted without license from IHS Not for Resale

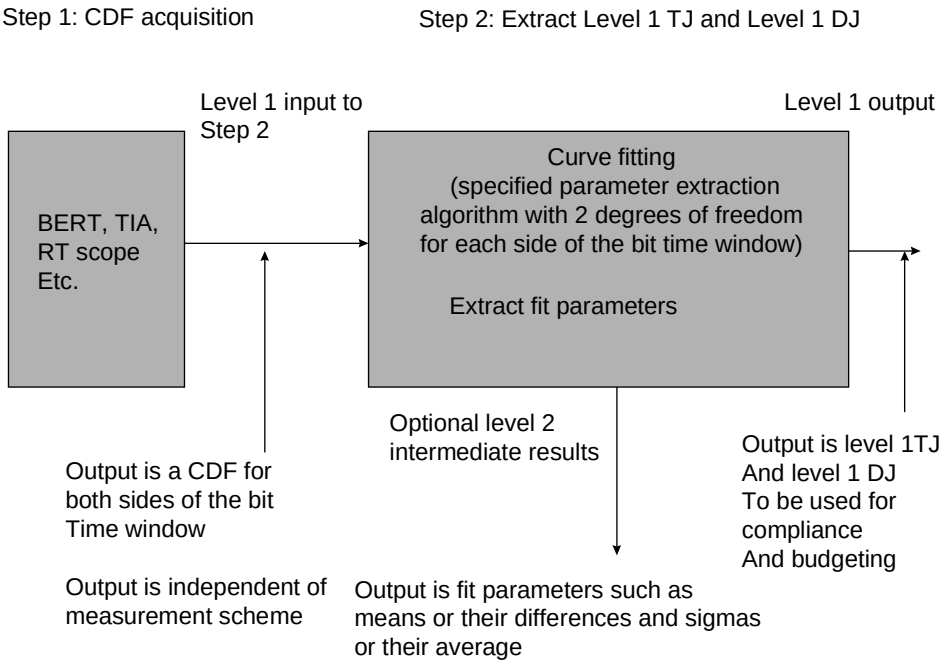

Figure 35 - The two step process for calculating level 1 DJ and TJ

The CDF itself is a level 1 quantity that may be used if there are no requirements on DJ or TJ.

A primary goal of using the same calculations to produce the compliance values is to reduce the error from attempting to extract DJ, RJ and TJ from any particular measurement scheme. Several measurement schemes included in this document define methods for calculating DJ, RJ and TJ. These calculations associated with particular measurement schemes produce level 2 results that may be useful for characterization or diagnosis. Measuring the same signal with different schemes may or may not produce the same level 2 DJ, RJ and TJ results. An RJ value is extracted in the process of calculating level 1 DJ and level 1 TJ but this RJ value is not used specifically for budgeting or compliance purposes and is therefore not a level 1 parameter.

The only valid method for producing a level 1 TJ or DJ value is via the calculations in this subclause.

It is expected that a fitted curve to the raw CDF data has been done as part of the process of producing the CDF output and that accurate expected time values associated with exactly the 10^{-6} and 10^{-12} CDF levels are available as input to the equivalent jitter calculation. Level 1 jitter calculations assume a functional form for the CDF output below the DJ ceiling but do not execute any curve fitting. The burden of producing an accurate CDF output lies with the individual measurement scheme.

The assumed form is a dual-Dirac PDF function, where each Dirac impulse, located at +DJ / 2 and -DJ / 2, is convolved with separate half-magnitude Gaussian functions.

Level 1 DJ ‘weights’ the measured distribution (after removing the RJ) in a manner that rewards benign DJ and penalizes harsh DJ. A benign DJ distribution is where the majority of the events are near the center of the distribution. A harsh DJ distribution is where the majority of the events are near the boundaries of the distribution. Therefore, level 1 DJ is usually less than peak-to-peak of the measured deterministic distribution, because the peaks of measured distribution usually occur with some lower probability. Total jitter must always be the same regardless of whatever form of DJ is used.

--`,,```,,,,````-`-`,,`,,`,`,,`---

Copyright International Organization for Standardization
Provided by IHS under license with ISO
No reproduction or networking permitted without license from IHS
Not for Resale

The constraints of an assumed CDF form and of using values at specific population levels are required to enable data acquisition methodology independence.

The choice of the dual Dirac is based on the historical forms used in MJS and FC-PI. The assumed form allows a simple calculation.

Level 1 DJ is *not* only a BERT method; it may be used by any instrument that measures or calculates a histogram (PDF) or CDF. Level 1 DJ does not understate DJ any more than peak-to-peak DJ overstates it. These are different definitions. Neither is the 'real' or 'true' DJ.

8.2 Examples comparing level 1 DJ with peak-to-peak DJ

Figure 36 shows three different DJ PDF's that all have the same peak-to-peak value of 0,1 UI.

The uniform distribution is harsh, the triangular distribution is less harsh and the raised cosine distribution is relatively benign.

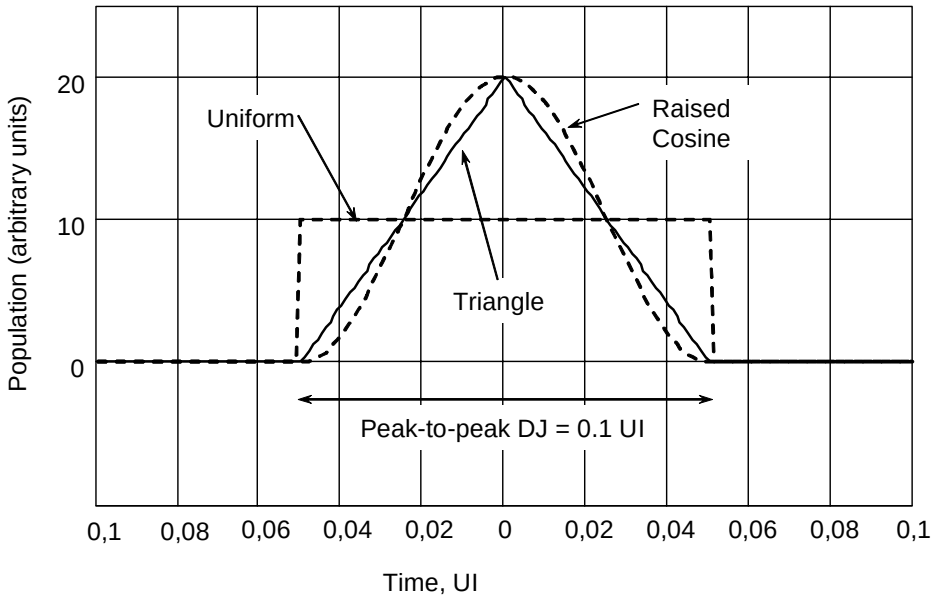

Figure 36 - Three different DJ PDFs used to create CDF's in figure 37

Figure 37 shows the CDFs that result when the DJ PDFs in figure 37 are convolved with RJ of exactly 0,020 UI rms.

--`,,```,,,,````-`-`,,`,,`,`,,`---

Copyright International Organization for Standardization
Provided by IHS under license with ISO
No reproduction or networking permitted without license from IHS Not for Resale

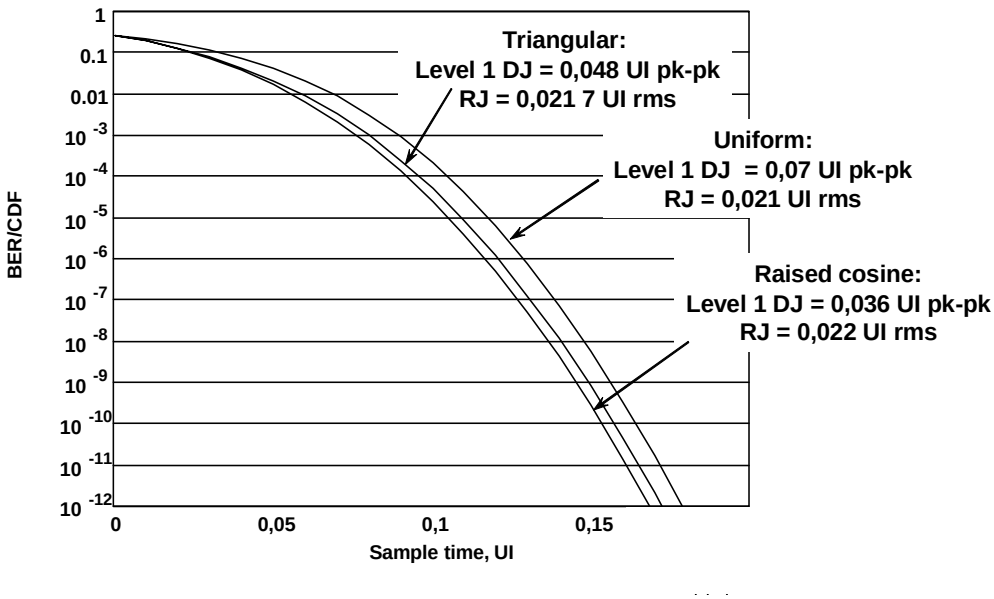

Figure 37 - CDFs and associated level 1 DJ values from PDFs in figure 36

Also shown in figure 37 are the values of RJ and level 1 DJ and that result from the calculations required in clause 8. Notice that the different level 1 DJ values account for the different TJ values and that the RJ values are almost exactly 0,02 UI. The shape of the DJ distribution makes a difference and is important for compliance.

Figure 38 shows an example of real data and the associated PDFs calculated from the methods in this clause. The term level 1 TJ PDF is used for convenience because it resulted from the level 1 calculations but there is presently no compliance requirement for TJ PDFs. The measured DJ PDFs and the measured peak-to-peak DJ were derived from a TIA measurement where no BUJ (bounded uncorrelated DJ) is present. In this case, the DJ may be separated from the RJ by averaging out all the uncorrelated jitter (i.e., by removing the RJ).

Copyright International Organization for Standardization
Provided by IHS under license with ISO
No reproduction or networking permitted without license from IHS Not for Resale

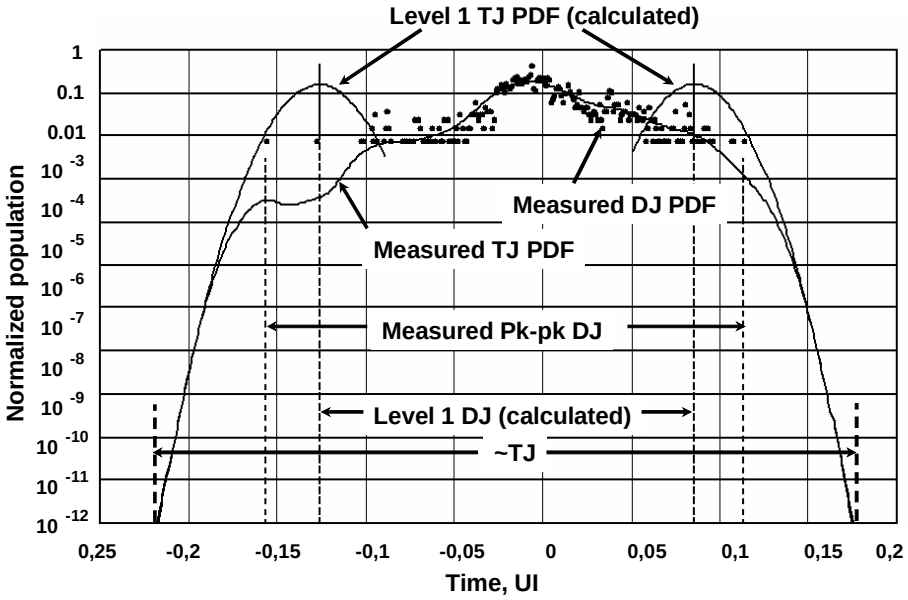

Figure 38 - Real data comparisons using PDFs

Figure 39 shows the CDFs that result from the PDFs in figure 38.

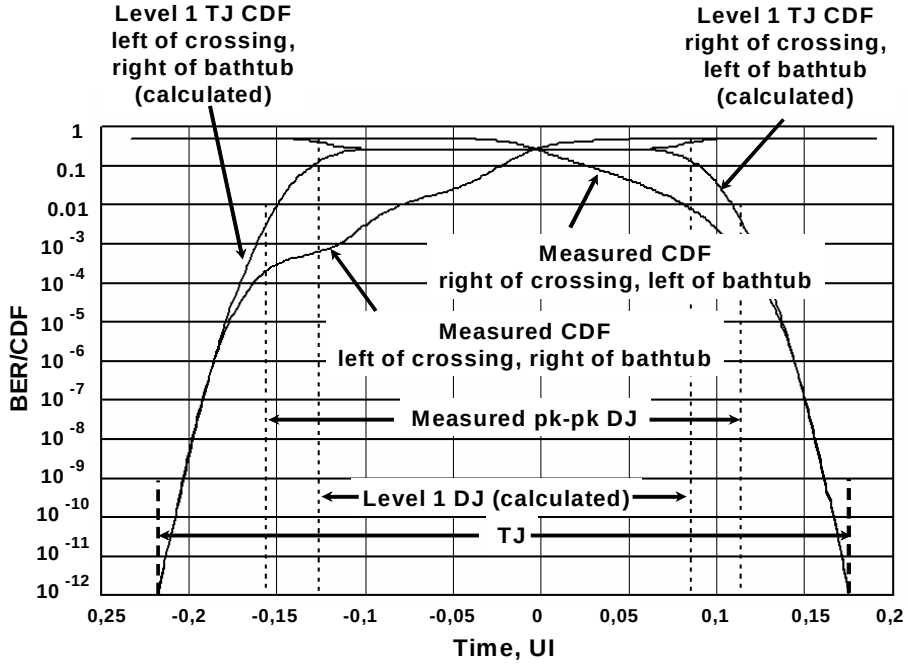

Figure 39 - Real data comparisons using CDFs

Copyright International Organization for Standardization
Provided by IHS under license with ISO
No reproduction or networking permitted without license from IHS
Not for Resale

8.3 Methodology details for calculating level 1 DJ and level 1 TJ

A CDF measured by any valid means is used as the starting point for the calculations specified in this subclause. Valid extrapolation methods may have been used in the measurement of this CDF - direct measurement at CDF = 1E-12 is not explicitly required.

Define the jitter eye opening at the CDF = 10^{-6} level as t_0 and the jitter eye opening at the CDF = 10^{-12} level as t_1. Both sides of the bathtub curve are required to determine the jitter eye opening.

Calculate Q_0 = -qnorm[(2/TD)*10^{-6},0,1] where qnorm is defined in Mathcad™ [1] and the transition density, TD, is assumed to be 0,5 for 8b10b encoded data.

Calculate Q_1 = -qnorm[(2/TD)*10^{-12},0,1] where qnorm is defined in Mathcad™ and the transition density, TD, is assumed to be 0,5 for 8b10b encoded data.

The resulting values under these assumptions are:

Q_0 = 4.465

Q_1 = 6,839

Calculate the jitter results from the equations below. RJ_{rms} is the rms (1 sigma) value for RJ. DJ and TJ are given as peak-to-peak values.

Q_n is the peak number of RMS jitter magnitudes for the given BER. TJ may then be expressed as:

Equation 7 – Level 1 total jitter

$$TJ = UI - t_1 = DJ + 13{,}68\ RJ_{rms}$$

where UI is the bit period (e.g., 941,2 ps for 1 062,5 GBd).

Equation 8 – Level 1 Deterministic jitter

$$DJ = UI - t_0 - (2xQ_0xRJ_{rms}) = (UI - t_0 - (8,93)(xRJ_{RMS}))$$

DJ and TJ when presented without subscripts are the level 1 values.

RJ_{rms} for use in equation 7 and equation 8 may be calculated from:

$$RJ_{rms} = 0{,}5\left|\frac{t_1 - t_0}{Q_1 - Q_0}\right| = (0{,}210\ 6)\left|t_1 - t_0\right|$$

This is not a level 1 RJ_{rms} since RJ_{rms} is not a level 1 parameter.

1. Mathcad™ is the trade name of a product supplied by Mathsoft Engineering and Education Inc. This information is given for the convenience of users of this document and does not constitute an endorsement by ISO or IEC of the product named. Equivalent products may be used if they can be shown to lead to the same results.

Copyright International Organization for Standardization
Provided by IHS under license with ISO
No reproduction or networking permitted without license from IHS Not for Resale

9 Basic data forms, analysis and separation of jitter components

9.1 Overview

9.1.1 Introduction

Clause 9 describes the basic data forms, analysis methods and methods for separating the components of the jitter distribution in addition to accurately determining the total jitter. These methods may be required to produce the CDF that is used for the level 1 calculations in clause 8 and are useful for characterization, design, diagnosis and other level 2 uses. The method described in clause 8 is required to produce DJ and TJ values for compliance purposes (level 1). The values of level 2 DJ, RJ and TJ produced from the methods described in clause 9 and in some subclauses of clause 10 may vary between the methods and before MJSQ was developed this was a source of error between measurements. Since TJ is directly contained in the CDF one does not expect significant differences in TJ from different measurement methods. However, even in the TJ case, only the method described in clause 8 may be used for level 1 purposes.

This clause is written without always making the distinction between level 1 values and level 2 values. Similar lack of distinction may also persist in documentation for specific instruments. It is up to the user to be diligent in avoiding to use any DJ or TJ values calculated by methods other than that described in clause 8 for level 1 purposes.

9.1.2 Basic data forms

There are five basic data forms considered:

a) time domain measurement of jitter events at a specific signal level from a jitter timing reference;
b) measurement of error rate at specific signal level and time from a jitter timing reference;
c) single shot capture of a signal waveform;
d) measurement of the time between a known number of signal edges at a specific signal level;
e) RF power spectrum.

Each of these data forms is accessible via known measurement processes and each has its own advantages and disadvantages. See table 5 for a mapping.

9.1.3 Data analysis methods

There are five data analysis methods considered:

a) direct PDF/CDF analysis on jitter events;
b) over-sampled sequential time analysis on a waveform;
c) under-sampled sequential time analysis on residual jitter from specific signal edges;
d) statistical bin analysis on time between n signal edges;
e) spectral density analysis on the jitter population.

Each of these data analysis methods, or combinations of these data analysis methods, may be used in the process of generating the CDF required for use in clause 8 to calculate the level 1 DJ and TJ. See table 5 for a mapping.

--`,,```,,,,````-`-`,,`,,`,`,,`---

Copyright International Organization for Standardization
Provided by IHS under license with ISO
No reproduction or networking permitted without license from IHS Not for Resale

9.1.4 Summary of overview

Table 5 provides a brief comparison of the methods.

Table 5 - Comparison of basic data forms and analysis methods (Sheet 1 of 3)

Analysis method	Data form	Processing to prepare CDF	Assumptions & comments	Other potential information (level 2) from data form	Instrument types described in this document that are capable of creating the data form (See also table 6)
PDF/CDF analysis	Time-based PDF of many jitter events or direct measurement of CDF at specific times via bit error measurements	• Some form of smoothing and/or extrapolation may be required • If PDF integrate into CDF	• Bit-timing reference and Golden PLL are already applied • Sufficient number of events for accurate fitting and/or extrapolation of tails • If extrapolation is required, assumed tails are Gaussian	• peak-to-peak DJ, • Other DJ PDF or CDF details • Cannot isolate sub-components of DJ	• BERT • TIA (clocked, pattern marker, markerless) • RT scope • Enhanced EQ scope
Over-sampled sequential time analysis	Single shot sampled capture of multiple pattern repetitions	• Interpolate jitter events between samples, interpolate missing signal edges, calculate FFT • Isolate DDJ • Isolate PJ from RJ • Calculate inverse FFTs for DDJ and PJ • Apply SW Golden PLL • Convolve DJ*RJ terms • Integrate into CDF	• Sufficient number of pattern repetitions for statistical relevance • Noise floor is Gaussian and uncorrelated • Broadband crosstalk in the measured signal may affect the validity of the CDF due to separation of DJ from RJ required prior to producing the CDF	• Any components from CDF preparation (peak-to-peak DJ, frequency content, PJ terms, etc.) • Info on run lengths, transition density, etc. • Can isolate DCD • Provides other waveform information including eye patterns	• RT scope

--`,,```,,,,````-`-`,,`,,`,`,,`---

Copyright International Organization for Standardization
Provided by IHS under license with ISO
No reproduction or networking permitted without license from IHS Not for Resale

Table 5 - Comparison of basic data forms and analysis methods (Sheet 2 of 3)

Analysis method	Data form	Processing to prepare CDF	Assumptions & comments	Other potential information (level 2) from data form	Instrument types described in this document that are capable of creating the data form (See also table 6)
Under-sampled sequential time analysis on residual jitter from specific signal edges	Under-sampled waveform of residual jitter from specific signal edges in a repeating pattern	• Calculate FFT and create histogram • Isolate PJ from RJ • Remove PJ (remaing spectrum contains the RJ) • Intgrate to produce the RJ value • Deconvolve RJ from the uncorrelated histogram to determine spectral peaks in the BUJ • Create composite PDF and integrate into CDF	• Bit-timing reference and Golden PLL are already applied • Broadband BUJ is not present • No important information is lost by the aliasing of high freqency components • Noise floor is Gaussian	•	• Enhanced EQ scope
Statistical bin analysis	Repetitive measures of jitter/time intervals per each UI bin of pattern	• Extract means and variances for bins; • DDJ is peak-to-peak of means, apply SW Golden PLL • For variances, interpolate missing signal edges, calculate FFT, apply spectral power density analysis • Convolve DJ*RJ terms • Integrate into CDF	• Sufficient number of pattern repetitions or averaging for statistical relevance • Noise floor is Gaussian and uncorrelated • PJ terms are not correlated • Broadband crosstalk in the measured signal may affect the validity of the CDF	• Any components of CDF preparation (peak-to-peak DJ, frequency content, PJ terms, etc.) • Info on run lengths, transition density, etc. • Can isolate DCD • Cannot reconstruct complex PJ tones (no vector phase information)	• TIA (markerless, pattern marker) • Enhanced EQ scope (for correlated DJ portion only - requires Golden PLL during data acquisition) • Uncommonmly, RT scope

Copyright International Organization for Standardization
Provided by IHS under license with ISO
No reproduction or networking permitted without license from IHS Not for Resale

Table 5 - Comparison of basic data forms and analysis methods (Sheet 3 of 3)

Analysis method	Data form	Processing to prepare CDF	Assumptions & comments	Other potential information (level 2) from data form	Instrument types described in this document that are capable of creating the data form (See also table 6)
Spectral power density analysis	RF power spectrum	• This method can analyze uncorrelated jitter but not DDJ so cannot develop a complete CDF by itself • Apply SW Golden PLL • Isolate PJ from RJ	• Sufficient number of pattern repetitions for statistical relevance • Jitter is the only variation (no signal level noise) • Noise floor is Gaussian and uncorrelated • PJ terms are not correlated	• Can isolate magnitudes of certain features with restricted data patterns such as square waves • Cannot reconstruct DDJ or complex PJ tones (no vector phase information)	• RT scope (with post processing) • TIA (markerless, pattern marker) • RF spectrum analyzer (with post processing)

Listing of an analysis method or an instrument type in table 5 or in table 6 does not imply that every method or instrument of that category is capable of delivering the required signal quality measurements. Specialized hardware and/or software may be required to extract the desired signal quality properties. Users are strongly cautioned to verify that the entire hardware / software combination delivers the accuracy required.

9.1.5 Organization of the document relating to material introduced in clause 9.

The details for the data forms and data analysis methods are given in the description for the different signal quality measurement methodologies in clause 10. The best fit of the tails method is described in 9.2 since it does not apply to any specific measurement methodology. The details of the 'jitter frequency spectrum derived from FFT of time domain measurements on repeating patterns method' differs somewhat between measurement methods and these details are embedded along with the specific measurement methods documented in clause 10. Some general properties of this method are described in 9.3.

9.2 Best fit of tails of histograms

9.2.1 Introduction

The starting point for this method is a PDF or histogram of the signal at the signal level of interest. This technique uses the basic assumption that only the tails of the jitter distribution are truly Gaussian and unbounded and that all other sources are bounded and deterministic. The attributes of this scheme are shown in figure 40.

In this approach, the magnitudes of the Gaussian functions are also variable and fittable, not just mean and sigma (in contrast, the level 1 dual-Dirac calculation described in clause 8 freezes the magnitudes).

This best fit of tails method only fits the entire Gaussian function in the tail regions at/below the measured DJ ceiling. That is, the Gaussian magnitudes are reduced to match the DJ magnitudes at μ^+ and μ^-.

Copyright International Organization for Standardization
Provided by IHS under license with ISO
No reproduction or networking permitted without license from IHS Not for Resale

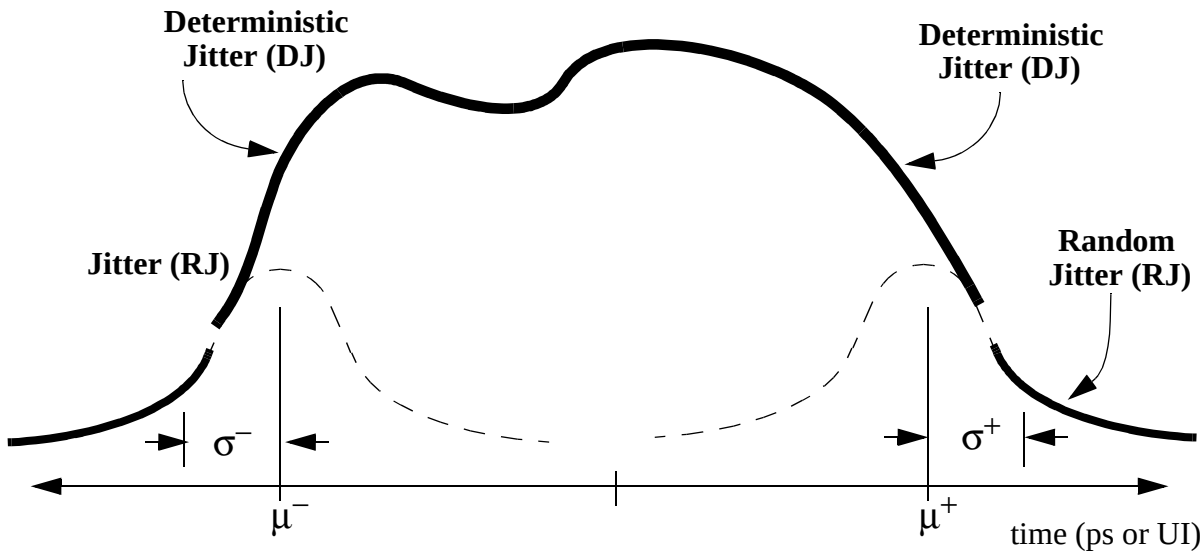

Figure 40 - Histogram of a set of jitter events

In this approach, a jitter histogram is collected by any means (sampling scope, time interval analyzer, BERT, etc.). If a BERT is used the PDF is produced by differentiating the CDF from the BERT. Alternatively, tail fitting in the CDF domain directly may be used. In this case, fitting assumes integrated Gaussian PDFs for the tail regions. The best-fit Gaussian PDF distributions for each tail are then determined. These Gaussian distributions are characterized by their respective means and standard deviations: μ^+, μ^-, σ^+, σ^-. The total jitter histogram is assumed to be the convolution of some deterministic jitter distribution (tailless) with the left and right Gaussian random components of jitter. The deterministic component is, in general, not symmetric -- μ^+ is generally not the same as $-\mu^-$. These means are measured with respect to the jitter timing reference.

The level 2 DJ, RJ (peak-to-peak) and TJ are calculated as follows:

a) **DJ is defined to be the time between μ^+ and μ^- (i.e., μ^+ minus μ^-)**. The means of the right and left Gaussian distributions may be different. The data patterns defined by FC encoding schemes do not allow DDJ distributions below approximately 1E-4. DCD is also a very high probability component. If the BUJ is caused by the high speed serial activity on other links then the BUJ distribution will also typically be greater than 1E-6 (possible exception is power supply induced jitter). If the BUJ is caused by rare conditions (e.g. lightning) then some DJ distribution may exist below 1E-6. Link-induced BUJ in FC is filtered by the loop response of the Golden PLL. This filtering limits the distribution of BUJ. Separation of the DJ distribution from the TJ distribution is straightforward because of the wide difference between 10^{-12} and the actual DJ distribution. Other encoding schemes (e.g. non 8b/10b) may have lower probability DDJ distributions, LPDDJ, that may require additional work to do the separation. See Annex A for more information on alternate encoding schemes and issues involved with other low-probability DJ distributions.

b) **TJ is defined to be the time associated with the CDF - 1E-12 population**.

c) **RJ peak-to-peak is defined to be the measured total jitter (TJ) minus the calculated deterministic peak-to-peak jitter (DJ)**. TJ is the CDF eye opening and DJ is derived from the PDF calculation. If the Gaussian contributions constitute most of the total population then RJ peak-to-peak is approximated by $7\sigma^+ + 7\sigma^-$.

Copyright International Organization for Standardization
Provided by IHS under license with ISO
No reproduction or networking permitted without license from IHS
Not for Resale

9.2.2 Tail fit jitter analysis method example

9.2.2.1 Jitter separation through tail fit

Figure 41 is a schematic drawing of a jitter histogram in the presence of both DJ and RJ components. The Gaussian PDFs and the tail part of the distributions are shown.

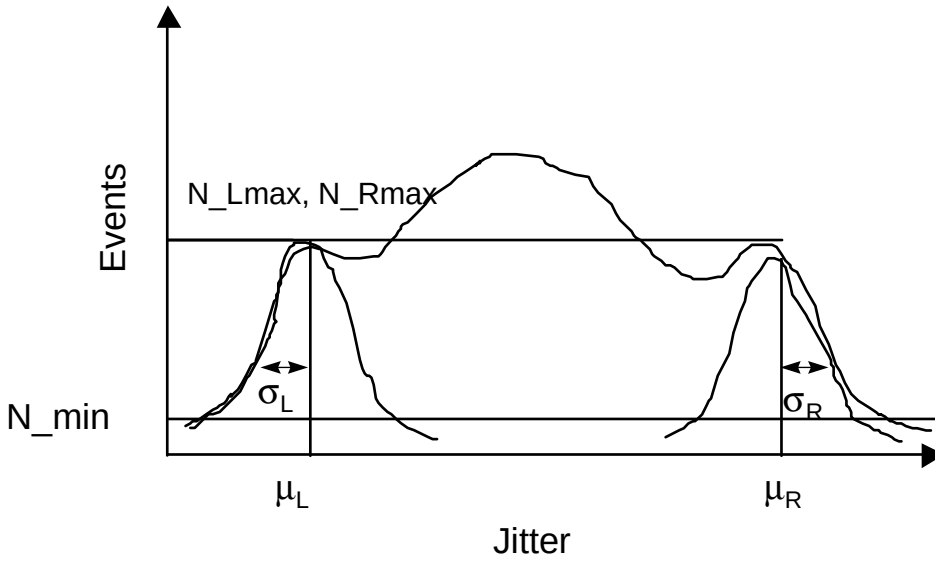

Figure 41 - Schematic drawing of the total jitter histogram in the presence of DJ and RJ

RJ is described by a Gaussian function. On the other hand, the DJ PDF could have many arbitrary forms, depending on the DJ root cause mechanisms. A single Gaussian jitter histogram dirstribution is defined as:

Equation 9 – Simplified Gaussian histogram

$$h(t) = N_{\max} e^{\frac{-(t-\mu)^2}{2\sigma^2}}$$

where N_{max} is the count of events at the peak of the DJ histogram for each side, t is the jitter, μ and σ are the Gaussian mean and standard deviation respectively. N_{max} depends on the granularity of the histogram. This is essentially a 3 degree curve fit where the parameters for the fit are N_{max}, μ, and σ.

Due to the nature that DJ and RJ PDF's interact through convolution and the fact that DJ PDF is bounded, the tail part of the total jitter PDF preserves properties of the RJ PDF. Therefore, the tail portion of the total jitter PDF may be used to determine the μ (mean) and σ (rms) values for RJ Gaussian PDF's by fitting the Gaussian function to the measured tail portion of the PDF.

If there is no bias and statistical sampling noise in the measurement, the two tails that represent the random process should be symmetrical. Since the rising and falling edges normally have difference slew rates, it is not possible to completely randomize measurements and reduce the sampling error to zero, the σ values for the far left and far right Gaussian tails will not be the same in general. The RJ σ value should be the average of these two and DJ is the distance between two peaks of far left and far right Gaussian tails, namely: $\sigma_{RJ} = (\sigma_L + \sigma_R)/2$ and $DJ = \mu_R - \mu_L$.

--`,,```,,,,````-`-`,,`,,`,`,,`---
Copyright International Organization for Standardization
Provided by IHS under license with ISO
No reproduction or networking permitted without license from IHS
Not for Resale

The tail fit algorithm is composed of two parts, one is the tail search that identifies the tail portion of the distribution. The other is the fitting procedure that fits the Gaussian function to the tail portion of the distribution. Difficulties encountered are:

a) Statistical fluctuation. The morphology of the fluctuation may have many forms and irregularities and a rule based artificial intelligence algorithm is needed so that tail search may be automated.
b) Nonlinearity. Since the Gaussian function is nonlinear with regards to its mean and σ parameters, a nonlinear fitting algorithm needs to be used, and it has to be an iterative process.
c) Weighting. Care shall be taken for the lower tail distribution statistics. A weighting function based on Poisson statistics is used to ensure the accuracy and repeatability of the fitting results.

Tail fit theory was discussed in the MJS ad hoc in 1998 (98-521v0) and was also described in 1999 at the IEEE International Testing Conference [32]. A patent, number 6298315, was filed on December 11, 1998 and was granted by US patent office on October 2nd, 2001 [33]. These references contain the details for executing the tail fit.

9.2.2.2 Tail fit accuracy

To study the tail fit accuracy, start with a Gaussian bimodal histogram distribution. The mean and rms values are known. Ramdon noise generated via the Monte Carlo method is then added to the histogram. Even when the noise amplitude reaches 15 % of the TJ histogram maximum, the error on the fitting parameter is less than 4 %. In other words, the algorithm is relatively immune to the statistical sampling error. In short, tail fit error is virtually zero when the distribution is clean and is less than 4 % when the distribution is very “noisy”.

Figure 42 shows that tail fit may give very accurate DJ and RJ estimation through Monte Carlo simulation.

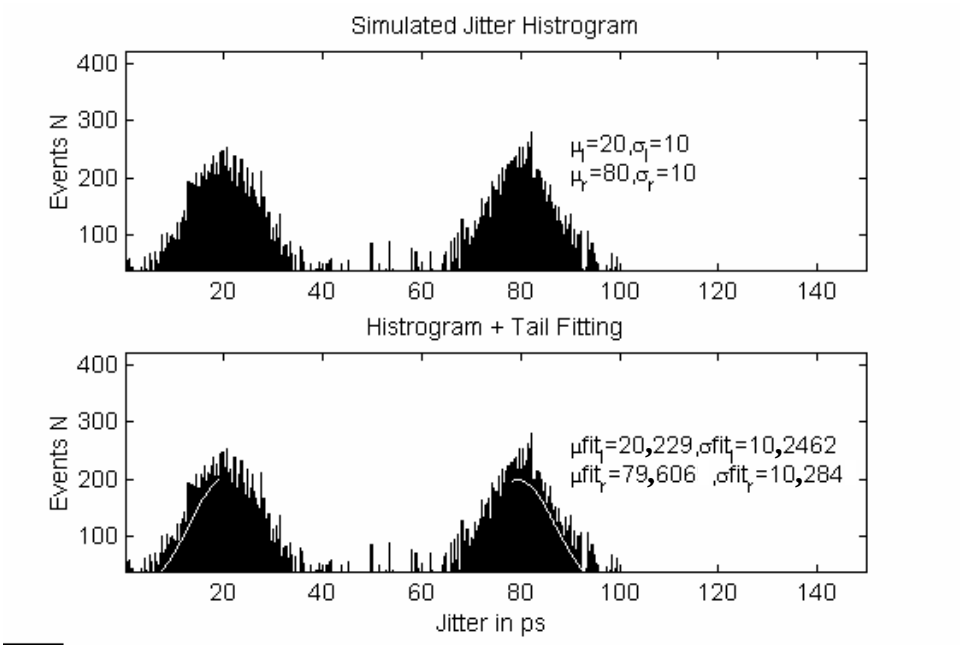

Figure 42 - Accuracy simulation for tail fit with a “noisy” total jitter histogram

It has been demonstrated that the tail fit method gives rise to TJ and BER that are consistent with those obtained through BERT measurement [32].

Copyright International Organization for Standardization
Provided by IHS under license with ISO
No reproduction or networking permitted without license from IHS Not for Resale

9.2.2.3 Tail fit application in serial data communication

Tail fit has been implemented and tested in a commercially available system. The system is typically composed of a clock recovery sub-system, a jitter measurement sub-system and system software that controls the data acquition and data analysis. A typical measurement set-up is shown in figure 43.

.

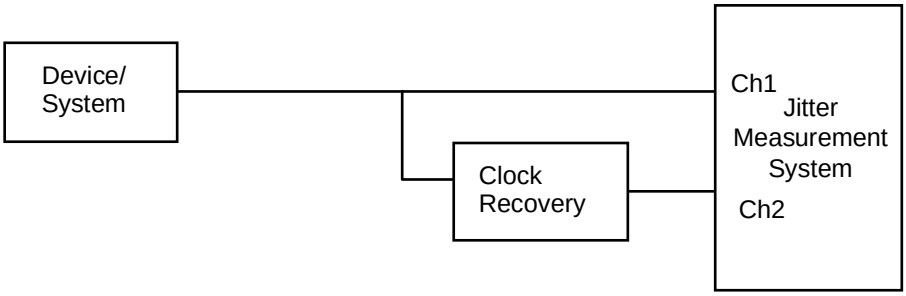

Figure 43 - Set-up schematic for jitter output measurement.

The jitter measurement system produces the jitter event population used to create the PDF. The device output has both DJ and RJ components. The recovered clock provides the jitter timing reference signal for the measurement. The jitter measurement system acts as a difference function. The whole measurement system emulates an actual receiver system in a serial communication receiver.

Figure 44 shows an example of a signal and its recovered clock using part of a CRPAT signal waveform running at 4,0 Gbit/s.

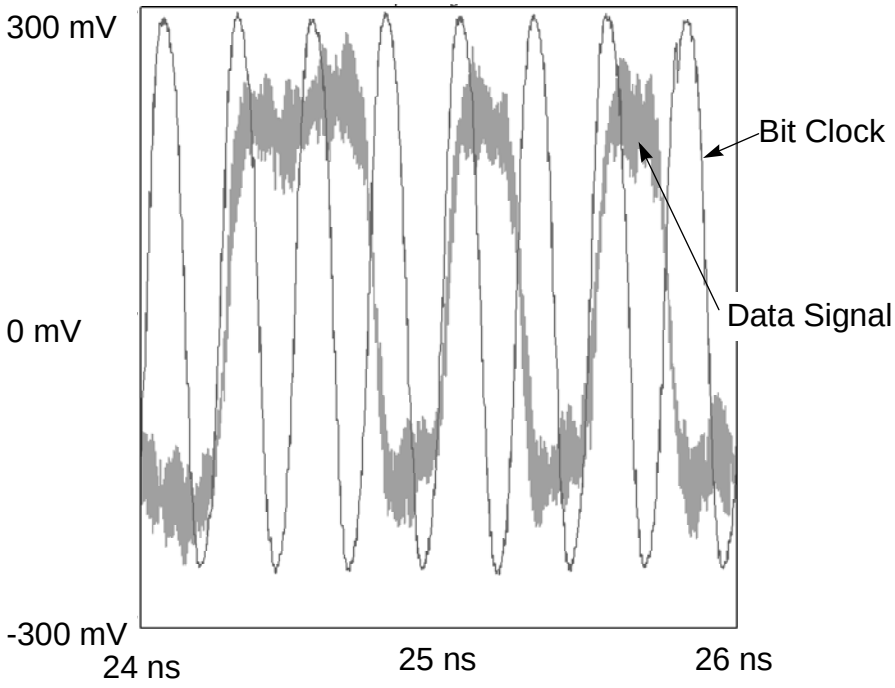

Figure 44 - Waveforms of CRPAT data and the recovered bit clock

Copyright International Organization for Standardization
Provided by IHS under license with ISO
No reproduction or networking permitted without license from IHS
Not for Resale

9.2.2.4 DJ and RJ measurement (level 2)

DJ and RJ separation is done using the definitions in 9.2.2.1. First the clock to data histograms are measured for both rising and falling edges. Then the tail fit method is applied to the histograms to obtain DJ and RJ. Figure 45 shows the signal in figure 44 with tail fits to the rising and falling edges.

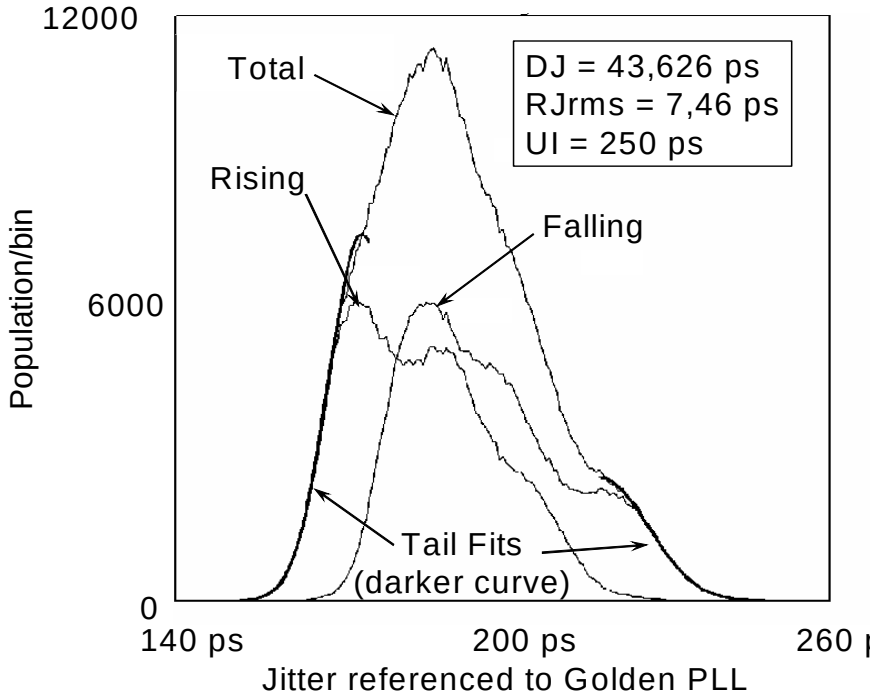

Figure 45 - Total jitter histogram measured with a Golden PLL clock as the reference

The tail fits in figure 45 are optimized for matching in the low population tail regions. Tail fits may not match well in the high population regions where significant DJ exists - see figure 41.

9.2.2.5 Level 1 CDF measurement

When the DJ and RJ measurement is done, the total jitter histogram has already covered the entire DJ PDF and the upper part of the RJ PDF. This means that it is possible to determine the entire TJ PDF function mathematically. A complete TJ PDF provides a solid base for calculating the level 1 CDF required for use in clause 8.

Figure 46 shows the level 1 CDF/BER functions and TJ at 10^{-12} for the signal in figure 44 and figure 45. This CDF/BER calculation and TJ determination virtually does not add any overhead to the total measurement time since today's fast microprocessors require only a matter of micro-seconds to calculate these results.

Copyright International Organization for Standardization
Provided by IHS under license with ISO
No reproduction or networking permitted without license from IHS
Not for Resale

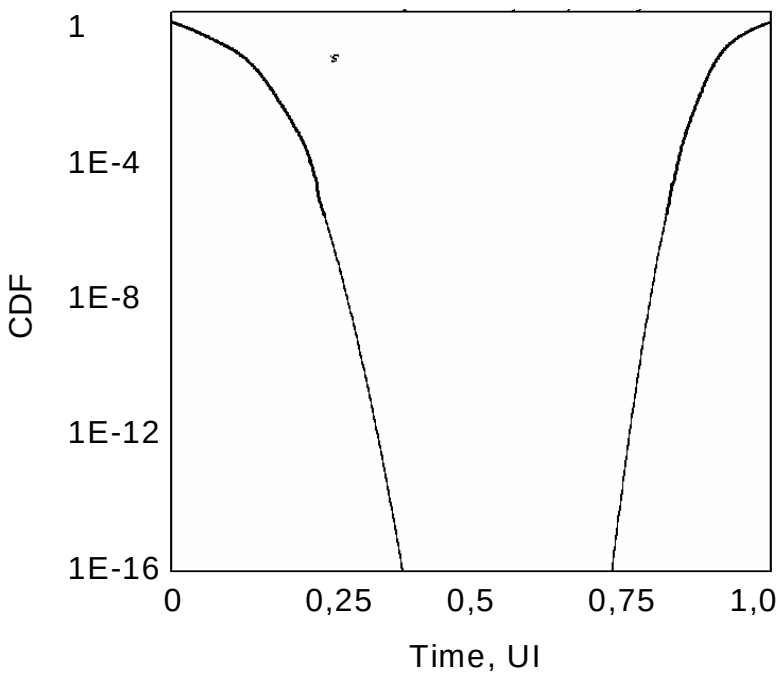

Figure 46 - Level 1 CDF "bathtub curve" for the PDFs in figure 45

9.3 Frequency spectrum method

This method uses repeating data patterns with a real time oscilloscope, an Enhanced EQ scope, a TIA with pattern marker or an RF spectrum analyzer. The output is a frequency domain spectrum that may have been produced by an FFT. An assumption common to all methods is that all uncorrelated DJ is revealed via the peaks in the spectrum. If there is any significant broadband BUJ (e.g., cross talk induced jitter, power supply induced jitter, circuit that clips the tails of a Gaussian distribution) or LPDDJ the RJ calculation is affected. In other words, some forms of BUJ may not be distinct from RJ in the frequency domain. Details are described in 10.3, 10.5 and 10.6.

--`,,```,,,,````-`-`,,`,,`,`,,`---

Copyright International Organization for Standardization
Provided by IHS under license with ISO
No reproduction or networking permitted without license from IHS Not for Resale

10 Signal quality measurement methodologies

10.1 Overview

10.1.1 Non-jitter properties of signal quality

The complete specification of signal quality requires more than the jitter performance at different signal amplitude levels. Other signal quality properties that may be important for various reasons include transient behavior, rise time, overshoot, ringing, peak amplitudes and amplitude noise, common mode content, balance levels in differential signals and other features that are not directly addressed in this document. See for example the following references:

Standards for Pulse measurements such as Rise Time, Fall Time, Overshoot, Ringing, etc:

a) IEEE Std. 181, 1977 Transitions, Pulses and Related Waveforms [18]
b) IEEE Std. 194, 1977 Pulse Terms and Definitions [19]

Waveform eye diagram measurements using histograms:

c) US Patent 5,343,405; Automated extraction of pulse-parametrics from multi-valued functions; Dennis Kucera and Paul Meyers, Tektronix, Inc. Aug. 30, 1994 [37].

Copper cable assemblies:

d) SFF 8410, HSS copper testing and performance requirements [23]
e) SFF-8415, Measurement methodolgy and signal integrity requirements for high performance electrical interconnect (HPEI) [24].

10.1.2 Overview of jitter related signal quality measurement methods

The signal quality measurement methods relating to jitter are summarized in table 6 and are documented in the following portions of clause 10. All of these signal quality measurement methodologies use the jitter timing reference specified in [6.8] in one way or another. A goal for clause 10 is to describe signal quality measurement methodologies that produce accurate, correlatable results suitable for use for verifying compliance test requirements (level 1). Inclusion of a method in this clause does not guarantee that this goal has been met for that method. Suitable jitter timing references may not be directly available at Fibre Channel compliance points and some methods described in this clause were created to address this situation.

Eight methodologies (3 scope based, 3 TIA based and 2 BERT scan based) for measuring signal quality are described in clause 10. The spectrum analyzer method is described in Annex A. Each measurement approach has its advantages and disadvantages. Table 6 summarizes the status of the measurement methods described in this document. To date, no comprehensive empirical testing has been conducted to correlate the jitter output results of all the test methods.

There are significant differences in the maturity of the methods. The equivalent time oscilloscope as used in the early nineties was found to be inadequate for high-speed serial data signal evaluation and this was one of the main reasons for starting the MJS effort in 1995. The timeline for introduction of methods to the MJS ad hoc is:

1) 1995 - Simple BERT methods
2) 1996 - TIA methods
3) 2001 - RT scope
4) 2003 - Enhanced EQ scope

This timeline defines the relative maturity of these methods. Work is underway to further understand the limitations and benefits of all methods. Users should consider that the less mature methods are not as proven as the more mature methods.

--`,,```,,,,````-`-`,,`,,`,`,,`---

Copyright International Organization for Standardization
Provided by IHS under license with ISO
No reproduction or networking permitted without license from IHS Not for Resale

10.1.3 Accuracy and verification considerations

10.1.3.1 Accuracy

For level 1 CDF outputs it is expected that the following accuracy requirements are met:

> Accuracy at CDF = 1E-12 to be within +-0,02 UI of the expected value with a 3 sigma confidence on repeated execution of the measurement. For example, if the expected value is 0,26 UI there should be no more than 3 results out of 1000 (99,7 %) at 1E-12 that fall out of the 0,24 to 0,28 UI range in 1 000 measurements.

In general it is expected that signals have significant amounts of RJ, DCD, DDJ and BUJ where the BUJ is significantly caused by noise (signal level noise such as crosstalk). The jitter output test is performed under emulated worst-case operating conditions. For example, to ensure that the jitter output from a duplex link has the BUJ that will be encountered in service the measurement shall be performed while the adjacent (same port) receiver is receiving an asynchronous data stream over the $\pm$100 ppm frequency range.

Although not a requirement in MJSQ it is expected that the DJ consists significantly of both compensatable DJ and uncompensatable DJ. There are also a set of expectations on the waveform properties that are not defined in this subclause.

It is likely that more than one measurement method may be needed for complete signal quality evaluation.

10.1.3.2 Verification

10.1.3.2.1 Overview

The task of determining the measurement accuracy and repeatability verification is left to MJSQ-2. However, the following discussion describes two approaches that have been used or suggested. In both methods there is still development work required to arrive at a transportable verification capability.

10.1.3.2.2 BERT method

A common technique to verify measurement accuracy is to make comparisons to CDF measurements made with a BERT. The BERT measurements can be performed directly to low probability levels without extrapolation and this property is assumed to remove uncertainty better than other methods. This scheme assumes that the conditions described in [10.1.3.1] for the signal under test are used. Since the detailed requirements for the signal are not completely specified the conditions for general verification are not complete and transportability of results may suffer. This method is presently not traceable to internationally recognized standards and the requirements for confidence have not been established. This verification method is useful for determining how well different jitter measurement methods agree with each other if the same signal source is used.

The actual jitter content of the signal under test may affect the results. If a standard signal is developed as described in [10.1.3.2.3] then that is the signal that should be used for this method as well.

10.1.3.2.3 Calibrated signal source method

Another approach is to verify jitter measurements using a signal source with known values of jitter and with no presupposition of the properties of the measurement method. This is not a trivial engineering problem, as jitter can be comprised of many different signal types. Thus the ideal jitter source must be capable of simultaneously producing several types of jitter, each with adjustable magnitudes. This must all be done in such a way that the jitter of the signal is known with a high degree of accuracy and the values are traceable.

To use this approach a transmitter with adjustable jitter that is traceable to NIST is required. The calibration of the jitter output from this transmitter is performed as follows:

1) PJ is verified through spectral analysis and a Bessel null technique providing jitter levels known within 1 %.
2) DDJ (dispersion type) is produced using various lengths of copper traces on common backplane

Copyright International Organization for Standardization
Provided by IHS under license with ISO
No reproduction or networking permitted without license from IHS Not for Resale

material. DDJ quantities are determined through S-parameter analysis using precision network analyzers. DDJ values are known to 1 %

3) DCD is provided through an adjustable pattern generator and verified through oscilloscope amplitude measurements. DCD values are known to 1 %.
4) RJ is produced through an arbitrary waveform generator using random number generators. Number lengths allow statistical variation to below 1 in a trillion values, thus providing truly random jitter beyond the typical 1E-12 total jitter values generally measured.

The verification of measurement accuracy is performed by subjecting jitter measurement tools to a large variety of jitter combinations. Specifically, RJ, DDJ, DCD and PJ are systematically adjusted to low, medium and high levels (as well as 'off'). In addition, PJ waveform types are also adjusted. Thus an extensive matrix of jitter conditions are presented to the instruments under test. For example, one signal configuration would be to have high RJ, low DDJ, no DCD and medium amplitude triangle wave PJ. Another configuration might be to have low RJ, high DDJ, medium DCD and large sinusoidal PJ. The validity of the analysis is based upon the quantity of jitter being known and adjustable.

The scheme described above assumes that all BUJ is represented by the PJ. There is no provision for non periodic BUJ. This method as described does not completely verify the accuracy of measurement methods intended for use on signals that contain non periodic BUJ. If such a non-periodic BUJ property were added a more complete signal would result. Also other signal properties such as amplitude and rise/fall time need to be standardized and added to the signal source before a truly transportable standard signal would result.

10.1.4 Summary of signal quality measurement methods

Table 6 lists a summary of the signal quality measurement method described in this document.

Listing of an acquisition method in table 5 or in table 6 does not imply that every instrument of that category is capable of delivering the required signal quality measurements. Specialized hardware and/or software may be required to extract the desired signal quality properties. Users are strongly cautioned to verify that the entire hardware / software combination delivers the accuracy required.

Table 6 - Signal quality measurement method summary comparison (Sheet 1 of 4)

Acquisition HW , method. and subclause	Acquisition requirements	Primary output data form	Attributes	Alternate output data forms
Conventional EQ scope eye histogram, [10.2]	• HW Golden PLL	• Time-based PDF of many jitter events	**Advantages** • Familiar and provides good qualitative information on jitter • Includes time and signal level information • No restrictions on pattern **Disadvantages** • Difficult to meet requirements for accurate analysis in any reasonable test time.	NA

Copyright International Organization for Standardization
Provided by IHS under license with ISO
No reproduction or networking permitted without license from IHS Not for Resale

Table 6 - Signal quality measurement method summary comparison (Sheet 2 of 4)

Acquisition HW , method. and subclause	Acquisition requirements	Primary output data form	Attributes	Alternate output data forms
Basic BERT, [10.4.1]	• Known pattern repetition (challenged by fill words) • HW Golden PLL	• Time-based CDF of many errors	**Advantages** • Emulates the receiver funtion in figure 25 • Little restriction on pattern length • Examines every bit in the data pattern for fastest exposure to all existing errors events • Can scan any direction in eye to get full eye contour • Level 2 information with analysis of error free intervals, etc. • Provides pattern information	NA
BERT with reference data channel, [10.4.4]	• HW Golden PLL • No signal induced errors in center of the eye	• Time-based CDF of many error events	**Advantages** • Emulates the receiver funtion in figure 25 • No restrictions on pattern • Examines every bit in the data pattern for fastest exposure to all existing errors events • Can scan any direction in eye to get full eye contour • Level 2 information with analysis of error free intervals, etc. • Provides pattern information	NA
TIA no clock, no marker, [10.5]	·	• Time-based PDF of many jitter events	**Advantages** • No clock required • No trigger jitter • No restrictions on pattern • Can measure across the entire eye to get full eye contour **Disadvantages** • May be less accurate than other TIA methods for the same data acquisition time	• Spectral power density (all components)
TIA bit clock. [10.5]	• HW Golden PLL	• Time-based PDF of many jitter events	**Advantages** • No restrictions on pattern • Emulates the receiver function in figure 27 as in a typical receiver • Can measure across the entire eye to get full eye contour	NA

Copyright International Organization for Standardization
Provided by IHS under license with ISO
No reproduction or networking permitted without license from IHS Not for Resale

Table 6 - Signal quality measurement method summary comparison (Sheet 3 of 4)

Acquisition HW , method. and subclause	Acquisition requirements	Primary output data form	Attributes	Alternate output data forms
TIA pattern marker, [10.5]	• HW Pattern marker • Repetitive pattern (requires edge counting or other methods to deal with fill words)	• Repetitive measures of jitter/time intervals per per each UI bin of pattern	**Advantages** • No trigger jitter • Provides accurate separation of DDJ • Provides pattern information • Can measure across the entire eye to get full eye contour	• Spectral power density (uncorreleated components)
RT scope, [10.6]	• Known length repetitive pattern (requires special handling for fill words) • Max pattern length limited to 2^{15} bits	• Single shot over sampled (sampling rate greater that the Nyquist rate of the signal under test) waveform of multiple pattern repetitions	**Advantages** • No clock required, no trigger jitter • SW Golden PLL • Provides pulse shape information. • Can re-analyze at different thresholds with same acquisition • Can scan in any direction in eye to get full eye contour. • Provides pattern information **Disadvantages** • Lower front end bandwidth than ET scopes • Validity of interpolation of the waveform may be compromised in the presence of noise higher than the Nyquist frequency of the signal under test	• Time-based PDF of many jitter events • Repetitive measures of jitter/time intervals per per each UI bin of pattern • Spectral power density (all components)

--`,,```,,,,````-`-`,,`,,`,`,,`---

Copyright International Organization for Standardization
Provided by IHS under license with ISO
No reproduction or networking permitted without license from IHS Not for Resale

Table 6 - Signal quality measurement method summary comparison (Sheet 4 of 4)

Acquisition HW , method. and subclause	Acquisition requirements	Primary output data form	Attributes	Alternate output data forms
Enhanced EQ scope, [10.3]	• HW Golden PLL • Requires a known repeating pattern (requires no change in fill word population) • Max pattern length limited to 2^{15} bits • Uncorrelated jitter does not exceed rise/fall times	• Full waveform with residual jitter included	**Advantages** • Common lab instrument for general waveform analysis • Targeted data acquistion for jitter is much more efficient than conventional EQ scope • Low intrinsic jitter • Very wide bandwidth/data rate range **Disadvantages** • Requires a model mapped to each signal edge for signal level to time conversion- the conversion is compromised if uncorrelated noise changes the shape of the edge • A tradeoff is made between accuracy and the number of edge models used • Identification of frequency components and aliasing issues is a current development topic	NA
RF spectrum analyzer Annex A	• Jitter is the only variation (no amplitude noise) • Square wave test patterns required to isolate uncorrelated from correlated jitter terms	• RF power spectrum (all components present)	**Advantages** • No clock required • No trigger jitter • Good tool for diagnostics due to ease of spotting frequency peaks to isolate deterministic and random noise sources. **Disadvantages** • Level 2 only • Not intuitive for digital designers who operate in the time domain • No vector phase information (cannot reconstruct DDJ and complex PJ)	NA

10.2 Equivalent time oscilloscope methods

10.2.1 Introduction

Although there are a number of different implementations of sampling technology, today's digital oscilloscopes utilize only two basic sampling methods: Real-Time (RT) sampling described in [10.6] and Equivalent Time (ET) sampling described in [10.2][]. Equivalent Time sampling may be divided further into two

Copyright International Organization for Standardization
Provided by IHS under license with ISO
No reproduction or networking permitted without license from IHS Not for Resale

sub-categories: asychronous and sequential. Each method has distinct advantages depending on the kind of measurements being made.

Real-Time Oscilloscopes are digital oscilloscopes that are capable of performing RT sampling, although they are frequently capable of performing ET sampling as well. Sampling Oscilloscopes are only capable of performing ET sampling, although typically at much higher signal bandwidths than for real-time oscilloscopes.

The following subclauses discuss each of the sampling methods in greater detail.

10.2.2 Equivalent time sampling

10.2.2.1 Overview

When a clock or data signal is repetitive, equivalent time digitizers may take advantage of this property. Samples may be acquired over many repetitions (trigger events) of the signal, with one or more samples taken on each repetition. This allows the oscilloscope to accurately capture signals whose frequency components are much higher than the scope's sample rate. Typically many bits, even many repetitions of the data pattern, may occur between samples.

There are two types of equivalent time sampling methods in use today, asychronous equivalent time sampling and sequential equivalent time sampling. Asychronous equivalent time sampling is sometimes called ’random’ equivalent time sampling in oscilloscope literature but the word ’random’ means Gaussian in this document. Asychronous equivalent time sampling allows display of the input signal prior to the trigger point, without the use of a delay line. Sequential equivalent time sampling provides much greater time resolution and accuracy. Both require that the input signal be repetitive.

Informative documents further describing oscilloscope sampling theory are:

a) Tektronix, Sampling oscilloscope techniques, Technique primer 47W-7209 [42].
b) IEEE Std 1057-1994 “IEEE Standard for Digitizing Waveform Recorders” [17].

Equivalent time sampling is often used in an oscilloscope to display a waveform eye diagram similar to that in figure 50.

Equivalent time techniques rely on a trigger event for its time reference. Many oscilloscopes have an internal clock recovery feature, where the Golden PLL as described in this document is implemented as part of the trigger system. This allows the oscilloscope to properly display the data signal without need for a separate timing reference. Alternatively, an external Golden PLL may be introduced as shown in figure 47. The accuracy of the measurement is always dependent on the jitter noise floor of the trigger system whether the Golden PLL is internal or external.

Copyright International Organization for Standardization
Provided by IHS under license with ISO
No reproduction or networking permitted without license from IHS Not for Resale

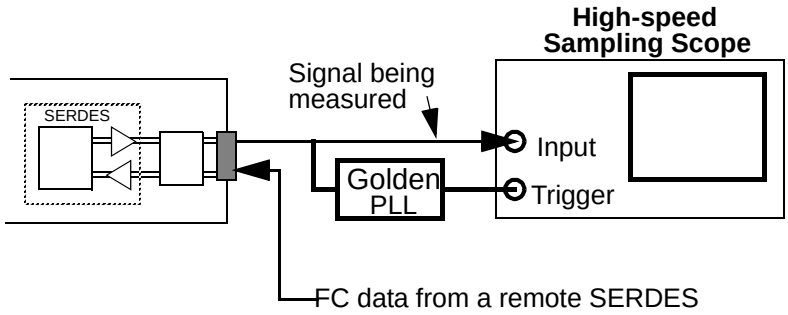

Figure 47 - Time domain jitter output test (Golden PLL)

10.2.2.2 Asychronous equivalent time sampling

Asynchronous equivalent time sampling uses an internal clock that runs asynchronously to the input signal and to the signal trigger ('T' in figure 48). Samples are taken as fast as possible, independent of the trigger position and are displayed based on the difference between the sample and the signal trigger times. The samples are taken sequentially but are not sequential with respect to the signal trigger.

The asychronous ET technique is often used to display waveform eye diagrams. Figure 48 shows an example of an asynchronous equivalent time data acquisition. In figure 48 the waveform shown is actually a very slow signal where many samples are possible in the same bit. For high-speed serial data streams each sampled point is actually many bits or many data pattern repeats apart in time. If triggering is adjusted on a repeating high-speed waveform such that 'T' is at the same point in the pattern, ET oscilloscopes may display a signal similar to that shown in figure 48. See 10.2.4 for more details. "Real time oscilloscopes" typically support both asychronous ET mode and real time (RT) sampling, see [10.6].

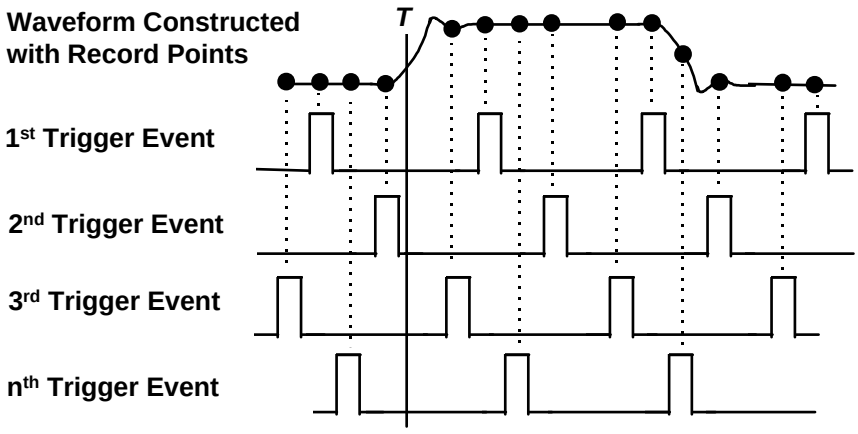

Figure 48 - Asychronous ET sampling

10.2.2.3 Sequential equivalent time sampling

The sequential ET technique is often used in "Sampling Oscilloscope" architectures to display waveform eye diagrams. Figure 49 shows this technique.

Copyright International Organization for Standardization
Provided by IHS under license with ISO
No reproduction or networking permitted without license from IHS Not for Resale

This method acquires one sample per signal trigger, independent of the time division setting. When a signal trigger is detected, a sample is taken after a very short, but well defined, delay. When the oscilloscope next experiences a signal trigger, a small time increment is added to the most recently used sample delay and another sample is taken. This process is repeated for four samples as shown in Figure 49. The process is repeated until a target number (N) of waveforms is acquired to fill the time window.

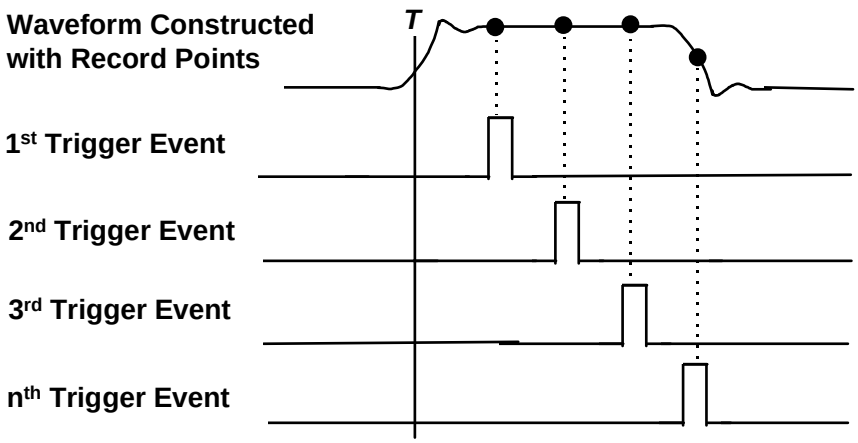

Figure 49 - Sequential ET sampling

10.2.3 Waveform eye mask measurements

Equivalent time measurement uses the high-speed sampling scopes to view the waveform eye. Most high-speed sampling scopes today provides features to collect and present data on the output jitter. Some oscilloscopes provide a feature to compare the measured data to a “waveform eye mask.” A waveform eye mask is a specification for allowed eye opening for the waveforms (not the same as the jitter eye mask where the 10^{-12} CDF level forms the mask boundary). The advantage of an waveform eye mask is that it tests for amplitude as well as some types of timing compliance. Figure 50 shows a graphical representation of a waveform eye pattern and the inner portion of a waveform eye mask used for testing for compliance to waveform properties. A complete waveform eye mask would include high and low limits not shown in Figure 50.

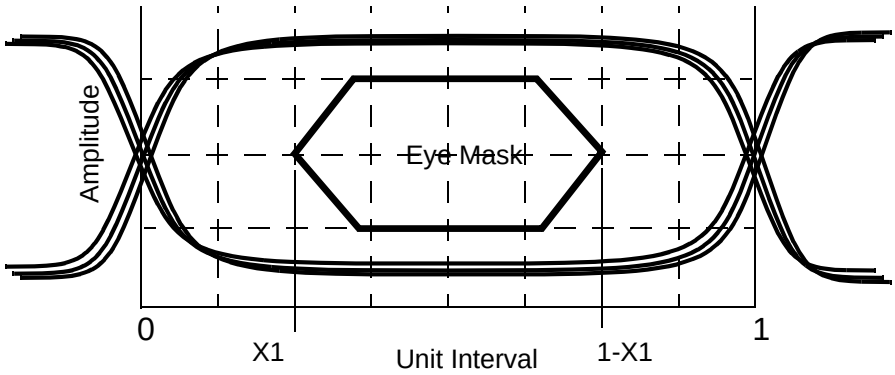

Figure 50 - Waveform eye mask

The waveform characteristics are specified in the form of a transmitter waveform eye mask at any of the interoperability points. Properties of waveforms that may cause waveform eye mask violations include noise, jitter, rise time, fall time, pulse overshoot, pulse undershoot and ringing. Detailed observation of some of these waveform properties may be made using the methods described in 10.2.4 . For the purpose of an assessment of the signal, it is important to not only consider the eye opening, but also the peak

Copyright International Organization for Standardization
Provided by IHS under license with ISO
No reproduction or networking permitted without license from IHS Not for Resale

excursions. The parameters specifying the mask may be found in the clause of the applicable physical layer specification.

An informative document describing the test procedure for measuring optical eyes may the found in the following reference:

TIA/EIA-526-4 OFSTP-4A “Optical Eye Pattern Measurement Procedure” [8]

The waveform eye mask is valid when a worst case data pattern is used to establish a worst case data dependent jitter for the eye diagram measurement.

FC-PH-n defines the low pass filter to be used when measuring optical waveforms (in addition to the golden PLL required by MJSQ). An optical waveform eye measurement usually assumes that a fourth order Bessel-Thomson filter is used for the low-pass filter with a filter bandwidth of 0,75*baud (for 1,062 5 GBd, 0,75*1,062 5 GHz = 797 MHz). For the optical waveform eye, the Bessel-Thomson filter is used in order to approximate the filter characteristics of the link optical receiver, thus filtering any high frequency ringing of the optical waveform that would not be transferred through the link receiver. In addition, the Bessel-Thomson filter is a linear phase filter (i.e., phase proportional to frequency over the frequency reange of interest) and thus does not introduce additional jitter while filtering the high frequencies. Measuring copper signals presently has no similar requirement for low pass filters.

It is strongly advised not to use the waveform eye mask to verify that total jitter is within specification because of the nature of the test. The waveform eye mask test is generally a short test and thus the waveform eye diagram is not captured for a sufficient time to capture the full extent of the random jitter’s peak-to-peak value. It is necessary to capture the waveform eye pattern for a sufficient period to ensure that the full extent of the deterministic jitter is captured by the test instrument. Further, it is required to convert to CDF form and to use the calculations in clause 8 to perform compliance tests. The waveform eye mask test produces PDF results if a histogram is used for the population at the signal level of interest.

10.2.4 Repeated pattern measurement using an equivalent time oscilloscope

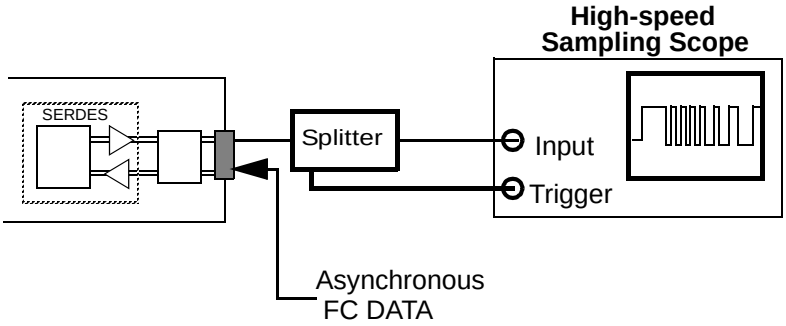

Figure 51 - Repeated pattern measurements using a sampling oscilloscope

This level 2 method is based on using the same part of a repeating data pattern for the timing reference and a sequential equivalent time oscilloscope. See 10.2.2.3 . There are two ways available to trigger the oscilloscope: pattern marker and direct signal edge triggering. The pattern marker is derived from the logical content of the data stream where only specific, identical portions of the data stream are examined. The direct signal edge triggering method described in this subclause requires a short repeating bit sequence and an analog trigger adjustment so that the same edge in the pattern is used as the timing reference.

This method is valuable for determining waveform properties from high-speed signals. The method is not suitable for jitter measurements because

a) it does not use a Golden PLL,
b) it does not allow adequate population for accurate RJ and TJ measurement.

Copyright International Organization for Standardization
Provided by IHS under license with ISO
No reproduction or networking permitted without license from IHS Not for Resale

The waveform used for the measurement is repetitive over a sufficiently small number of bit periods to allow the entire run length to be displayed. In practice this means not more than 40 bit periods. The pattern also repeats such that it is both continuous and contiguous.

The Fibre Channel LIP F7 primitive is a good choice being comprised of K28.5, D21.0 (in following the K28.5 gives an 8 bit time sequence of 01010101), D24.7 and D23.7. This pattern, or a similar one, is also typically the default output by an FC device that is unconnected to any other FC device.

The measurement is set up by adjusting the timebase of the 'scope until not less than 40 bit times are displayed, then adjust the trigger hold-off of the scope until the four byte pattern 'freezes'[1]. When this occurs, then the scope is triggering from the same edge in the four byte sequence. If averaging is then applied, the time delay to the crossing of zero differential voltage of each edge may then be measured, as any jitter (both random and deterministic) not synchronous with the 40-bit repeating pattern has been 'removed' by the averaging.[2] Use a window or delayed trace to increase the resolution of the measurement. Once the data has been collected, it may be analyzed as follows:

1) From the time between the average position of the first measured edge and the average position of the same edge 40 bit periods away the mean bit time t_{mb} may be calculated.
2) Using t_{mb} the time that each edge would have crossed if no correlated jitter had been present may be calculated. The difference between the edge time exclusive of correlated jitter and the actual average time for each crossing may then be calculated. This difference is the correlated jitter for that crossing.

Beyond these correlated jitter results, each edge may be displayed, in turn, at increased resolution by using a window or delayed trace. The scope is then set up to measure (in statistical mode) the 'crossing point' of each edge, including the first edge of the second sequence and also the jitter (peak-to-peak) present on each edge with respect to the average position of the edge. This represents the statistical difference of the residual jitter (both random and uncorrelated deterministic) on the displayed edge and the prior data edge used for the trigger. As such, histograms of these jitter components may be analyzed using the technique outlined in 10.5.4.3. Since the range of bit periods covered is relatively small, detection of the frequency spectra of this jitter (see 10.5.5) is limited to those components above about 25 MHz to 50 MHz. Residual jitter measured this way does not contain the required Golden PLL effects.

10.3 Enhanced equivalent time oscilloscope

10.3.1 Overview

Enhanced EQ scope methods use the same basic data acquistion methods used in ordinary equivalent time sampling oscilloscope methods (see 10.2.2) including the hardware Golden PLL. The Enhanced EQ scope measures every edge in the pattern with a fixed internal scope delay that minimizes any autocorrelation effect from the Golden PLL. The effective sampling efficiency of the equivalent time sampling oscilloscope may be significantly enhanced for jitter analysis by focusing the waveform samples only on the ideal (zero jitter) edge location rather than on a complete reconstruction of a waveform edge to determine edge placement. An enabler to increased measurement efficiency is a transfer function that allows the signal level measured with any single sample taken from a known edge in a data pattern to be directly translated to a time jitter value. This transfer function is achieved by generating models that apply to the specific signal edges in a repeating data pattern.

If the time of the sampling is set up to take place at the middle of the ideal edge (e.g., zero volts for a differential NRZ signal) an early arriving signal has a signal level above the middle at the sampling time, while a

1. Some scopes have the ability to trigger after 'n' instances of some condition such as zero crossings. In this case set the number of instances to the number of falling edge zero crossings, (or rising edges depending on trigger polarity setting) contained within the 40 bit time pattern. (For the LIP F7 n is 11).
2. Some scopes have a statistical measurement mode that averages in time. This is a better alternative than typical waveform averaging that is done by voltage.

Copyright International Organization for Standardization
Provided by IHS under license with ISO
No reproduction or networking permitted without license from IHS Not for Resale

late arriving edge has an signal level below the middle level at the sampling time. This is essentially a direct measurement of the signal level noise at a specified time, as shown in figure 10.

To determine the amount of time jitter on the edge where the sample was taken, one must know the signal level versus time shape of the nominal signal edge in figure 10. This shape is effectively a signal level-to-jitter transfer function - or a model of the edge. Once the edge is modelled, every sample that is taken along that same edge in the data pattern yields a time jitter measurement, as long as the edge has the assumed shape when the sample is taken.

A pattern measurement consists of many repetitions of the pattern where each repetition produces at most a single data point and every edge in the pattern is measured multiple times to get a population distribution for each edge. Uncorrelated jitter is measured from a single edge in the pattern.

Uncorrelated jitter cannot exceed the rise and fall times for the signal. Correlated jitter does not have this limitation because the instrument has determined where the nominal edge position is in the "setup" and afterwards positions the edge model and all subsequent measurements at that point. This allows correlated jitter (DDJ and DCD) to be much larger than the rise and fall times for the signal.

10.3.2 Signal edge models

Two types of edge models are considered - single-edge models and composite-edge models. Single edge models are used in uncorrelated jitter measurements while the composite edge models are used for data dependent jitter measurements. A single-edge model is constructed by taking samples across the entire span of one edge. A mathematical function is constructed that delivers the best fit, in a least squares sense, to the sampled data. A composite-edge model is very similar, except the samples used to construct the model are taken from multiple edges.

A single-edge model is used to describe the signal level-to-jitter characteristics of a specific edge of a pattern. Composite-edge models are composed of many points and are used to describe the signal level-to-jitter characteristics of a class of edges. The shape of an edge may be dependent upon the preceding bits. For example, if the 'memory' lasts for only three or four bits, there are several classes or groups of edge shapes possible. A class is defined by two factors - rising versus falling and the number of preceding bits. For example, '00001' is one class of rising edge and '00101' is another. Similarly, '11110' is one class of falling edge and '11010' is another. Consequently, many edge classes are defined - both rising and falling. The number of classes required for an accurate measurement depends on the data pattern, the encoding scheme used, the channel dispersion, a.c. coupling, reflections and other factors that affect ISI.

There is some measurement time overhead associated with generating edge models for the several edge classes. However, consider that once the models have been generated, from that point forward almost every sample obtained provides a jitter value resulting in significant measurement efficiency.

10.3.3 Periodic jitter frequency analysis beyond the Nyquist rate

ET scopes sample rates are below 1 MHz (e.g., 40 KSa/s for some Enhanced EQ scope instruments) and are therefore subject to Nyquist considerations for the high-speed signals of interest to MJSQ. According to Nyquist, for a 40 KSa/s rate jitter frequencies above 20 kHz will be aliased (power levels are accurately identified, but without bandwidth limiting the frequency values are ambiguous).

To improve on the results available from a single sampling rate one may take advantage of the ET oscilloscope’s ability to alter the sampling rate. By measuring with the sample rate altered by a known amount a unique ‘aliased’ spectrum may be created. This allows better resolution than the single sampling rate condition assumed in the Nyquist criteria. Only those frequencies that produce the peaks observed for both (or a multiplicity of) sampling rates are valid (the signal did not change so the actual frequency content in the signal did not change). Comparing spectra from different (known) sample rates allows proper identification of the frequency associated with the spectral peaks observed.

Limitations still exist similar to isolating the random from the periodic spectra

Copyright International Organization for Standardization
Provided by IHS under license with ISO
No reproduction or networking permitted without license from IHS Not for Resale

a) very low power harmonics/spectra of a periodic signal can be difficult to isolate from noise spectrum,
b) range of this approach is limited to jitter spectra from about 10 Hz to bit rate/4.

10.3.4 General process for extracting the CDF

10.3.4.1 Overview

The process to determine the time jitter CDF that may be used for extracting the level 1 DJ and TJ as described in clause 8 is achieved by extracting a level 2 RJ and a level 2 DJ to accurately reconstruct the level 2 TJ used in the Enhanced EQ scope method.

A pattern trigger is required (commonly derived internally within the instrument). The pattern trigger is determined by dividing the trigger clock input by the pattern length. The pattern trigger is manipulated to execute the edge modelling process within the pattern. Samples are acquired only on the edges and converted directly to jitter values.

The level 2 jitter separation methodology approaches the task by independently targeting the jitter that is correlated to the data pattern and the jitter that is uncorrelated from the data pattern. The correlated jitter is by definition the data dependent jitter (DDJ) and the duty cycle distortion jitter (DCD). The uncorrelated jitter is made up of random jitter (RJ) and uncorrelated deterministic jitter (BUJ). (See [7.2]).

10.3.4.2 Correlated Jitter

Averaging is used to isolate the DDJ and DCD. Averaging eliminates the uncorrelated elements. The jitter that remains is that correlated to the data pattern - the DDJ and DCD. Composite-edge modeling is used in order to maintain maximum sampling efficiency, as each edge in the pattern must be measured in order to characterize the DDJ + DCD. The pattern trigger is "walked" through the pattern and samples are taken from every edge. The composite-edge model associated with each edge's class is used to translate each signal level measurement into a jitter measurement.

The jitter on edges is segregated for the rising edges and the falling edges. A probability distribution function (PDF) histogram is created for both the jitter of the rising edges and the jitter of the falling edges as well as a jitter histogram of all edges. The DDJ + DCD is given by the peak-to-peak spread of the histogram of all edges. It is the arrival time difference between the earliest arriving edge and the latest arriving edge. Asuming that the DDJ consists entirely of jitter from ISI mechanisms then the jitter induced by inter-symbol interference (ISI) is given by the peak-to-peak spread of the histogram of rising edges or of the histogram of the falling edges, whichever is greater. Duty cycle distortion (DCD) is given by the difference between the mean of the rising edge positions and the mean of the falling edge positions.

10.3.4.3 Uncorrelated Jitter

The mechanism for determining the uncorrelated jitter, also called residual jitter (RJ and uncorrelated DJ consisting of added PJ, crosstalk and power-supply noise - see [7.2.3] and [7.2.3.4]), takes advantage of the fact that any edge taken in isolation has no knowledge of the pattern dependent elements that affect it. Its deviation about its mean position is totally dictated by the uncorrelated elements. For each data acquisition cycle targeted at uncorrelated jitter, the oscilloscope acquires all of its samples on a specific edge within the pattern, thus all pattern dependent jitter is removed from this data. A single-edge model is used and samples are taken specifically at the edge. The edge model technique is used to efficiently convert signal level samples to jitter values. Subsequent acquisitions are taken from other edges in the pattern, but each individual acquisition record uses data from a single edge. Data from all acquisitions is accumulated in a histogram.

The pattern trigger is controlled such that the sampling interval is very precise and consistent sample-to-sample. The result is that the samples are taken in a highly periodic fashion. This allows the jitter values to be transformed into the frequency domain using a fast Fourier transform (FFT). This results in the spectrum of the jitter that is uncorrelated from the data pattern, that includes the RJ and uncorrelated DJ.

Copyright International Organization for Standardization
Provided by IHS under license with ISO
No reproduction or networking permitted without license from IHS Not for Resale

If there is no broadband crosstalk or power supply jitter then the RJ makes up the noise floor of the spectrum and the uncorrelated DJ consists of only PJ (that may be partly due to crosstalk and power supply jitter) that shows up as discrete frequency components or line spectra. These PJ line spectra are removed and a new spectrum is created by using interpolation to fill the 'gaps' left behind by the missing spectral lines. Under these assumptions the new spectrum is due to the random components of jitter. The RJ is obtained by integrating the noise floor of this spectrum to determine the root mean squared (RMS) RJ, that is, the standard deviation of the random jitter distribution. If there is uncorrelated DJ due to broadband crosstalk or power supply noise present these components may or may not have discrete spectral components visible and the attribution of the noise floor to RJ alone may not be valid.

Under the conditions of no broadband crosstalk and no power supply jitter the following process is used to determine the PJ - the line spectra are not used to determine the PJ. The sample rate of common equivalent time oscilloscopes is under 1 MSamples/s. Any jitter spectral content that is above half the sample rate will be aliased. This limits the analysis of the jitter spectrum to that of the noise floor described above and will not allow the periodic elements to be determined accurately. The PJ is determined by returning to the accumulated histogram of the jitter values obtained for the targeted edges. A dual-Dirac delta model is used to determine the PJ. Under the assumptions of no crosstalk and no power supply jitter the entire DJ content for the targeted edge only is PJ. The standard deviation of the RJ distribution is given by the measured RMS RJ described above. A dual-Dirac delta model is constructed with two identical Gaussian distributions each defined by the measured RMS RJ value. The separation of the two Gaussian distributions is determined through the process described in [10.3.5]. Sufficient population must exist for the curve fitting to be accurate. The PJ value is given by the resultant separation between the means of the two Gaussian distributions.

10.3.4.4 Aggregate Deterministic Jitter (DJ)

The process described in [10.3.4.2] and [10.3.4.3] results in specific level 2 values for RJ, PJ, DCD and DDJ. These contain all the elements of jitter if there is no broadband crosstalk or power supply jitter in the signal. The task now is to accurately combine these elements to produce an aggregate deterministic jitter (DJ) value and finally a total jitter CDF. So far, probability density functions (PDF) have been determined for the uncorrelated jitter (RJ and PJ) and for the correlated jitter (DDJ and DCD). The DJ value is composed of DDJ, DCD and PJ, but it is not a simple sum of the values, as each is defined by a statistical distribution.

To determine the aggregate level 2 DJ, a methodology similar to that used to determine the PJ from the RJ, PJ PDF is used. The RJ, PJ, DCD and DDJ PDFs are convolved together. The aggregate histogram is called the total jitter histogram, as it is the PDF of all of the measured jitter - both correlated and uncorrelated - combined in a single histogram. The dual-Dirac model methodology described above for extracting PJ from the RJ, PJ histogram is applied to the total jitter histogram. The same measured RMS RJ value describes the two Gaussian distributions. The same fitting technique may be used. However, as the total jitter histogram is the PDF of all jitter elements, the resultant separation is the aggregate level 2 DJ.

10.3.5 Level 1 CDF output

The CDF to be used in clause 8 to calculate the level 1 DJ and level 1 TJ is the integration of the total jitter histogram (PDF) described in [10.3.4.4] (i.e., the histogram produced by the convolution of the RJ, PJ, DCD and DDJ). This CDF is valid for level 1 use only if it has been determined that there is no broadband crosstalk or power supply jitter (i.e. if the crosstalk and power supply jitter that is present is independently determined to consist of only discrete spectral components). Otherwise the results are level 2 only.

Summarizing the process for creating the level 1 CDF:

1) Correlated jitter samples are obtained using the edge model transfer function at each edge in the pattern. Averaging is used to remove uncorrelated jitter.
2) Uncorrelated jitter samples are obtained through the appropriate edge model applied to a single edge of the pattern. (Once the full pattern has been measured for correlated jitter, subsequent uncorrelated jitter measurements are taken at a new edge position for each full pattern measurement. All uncorrelated samples are aggregated).

--`,,```,,,,````-`-`,,`,,`,`,,`---

Copyright International Organization for Standardization
Provided by IHS under license with ISO
No reproduction or networking permitted without license from IHS Not for Resale

3) As above, RJ is obtained by transforming the uncorrelated jitter samples into the frequency domain, removing spectral lines and integrating the residual spectrum. This allows the standard deviation of RJ to be determined very accurately.
4) With RJ determined, the CDF for total jitter can be constructed. A total jitter PDF is obtained by convolving the correlated jitter PDF (measured) with the uncorrelated jitter PDF (measured). A dual-Dirac model is then constructed based upon the RJ value. The Dirac model is adjusted until the time positions of the tails of the model match with those of the measured/convolved histogram (both with normalized densities). The measured histogram 0,1 %/(# transitions in the pattern) tail population is located and the 0,1 %/(# transitions in the pattern) tail population of the model is positioned at the same time value. This model of the PDF is then used to extrapolate TJ to low probabilities and to produce a CDF for the purpose of creating a bathtub curve.

10.4 BERT scan

10.4.1 Basic BERT scan

A BERT scan (or equivalently a BER scan) may be used to characterize the signal as it relates to bit error ratio that would exist at that point in the link if a receiver were present at that point in the link. The BERT should be clocked by a golden clock recovery circuit that is driven by the signal under test (see figure 52.) The BERT reports the CDF directly at the time being used to sample the data in the BERT receiver. By scanning the sampling time across the entire bit time, the bathtub curve is generated. With long measurement times, it is possible, but not necessarily convenient, to directly measure BER as low as 10^{-12}, yielding a direct measurement of total jitter.

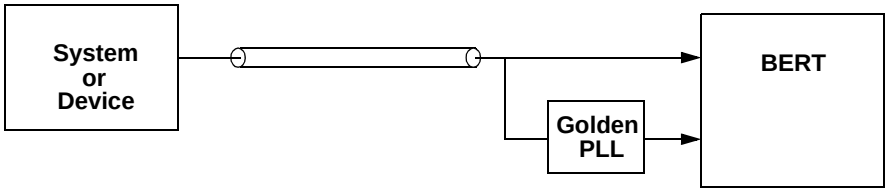

Figure 52 - BERT Scan signal quality measurement

The BERT should run through its automated alignment and synchronization procedures after the equipment is set up. Automated alignment is disabled after these procedures have completed and before the sampling time is scanned through the eye.

High error rates are observed as the sampling time enters into the crossing region so (re)synchronization should also be disabled or set to tolerate very high errors rates. If resynchronization is required, it is beneficial that it occur quickly. The resychronization may be required in the presence of high error rates.

To reduce time required for a BER scan, scanning should start towards the eye crossing where error rates are high. If a target such as 10 errors is sought to provide reasonable statistical confidence in any BER value, the time required at high error rates will be very short and scanning may be very fast. Scan direction would be in a direction toward lower error rates until the ending target value is reached. Step size may be modified and optimized by evaluating the rate where BER is decreasing as the scan progresses. There is no need to begin scanning in the center of the eye where the BER is probably very low and the time to get errors could be lengthy.

The BERT scan approach, when used in conjunction with the jitter model described in [6.5.6], may provide random and deterministic jitter components and provides a mechanism to extrapolate to lower bit error rates (less than 10^{-15}) without impossibly long test times. BERT scan application software has become available to automate this technique.

Copyright International Organization for Standardization
Provided by IHS under license with ISO
No reproduction or networking permitted without license from IHS Not for Resale

A measured BERT scan bathtub curve is a cumulative probability distribution function. This function may be smoothed and fitted by a histogram technique as elsewhere described in this document to determine peak-to-peak total jitter, peak-to-peak deterministic jitter and random jitter or other level 2 functions.

10.4.2 Alternate combined process to extract level 1 DJ and TJ

It is possible to combine the smoothing and fitting functions into one process to determine level 1 jitter values defined in clause 8 directly. By example, the following method may be used.

1) Form the BER scan results into matrices. The example below shows the sample times for a scan of the left side of an eye, t_1 and the corresponding measured bit error rates, MER_1.

$$t_l := \begin{pmatrix} 1\,392 \\ 1\,394{,}6 \\ 1\,397{,}3 \\ 1\,399{,}9 \\ 1\,402{,}5 \\ 1\,405{,}2 \\ 1\,407{,}8 \end{pmatrix} \quad MER_l := \begin{pmatrix} 1{,}02 \cdot 10^{-8} \\ 4{,}91 \cdot 10^{-8} \\ 1{,}60 \cdot 10^{-7} \\ 4{,}73 \cdot 10^{-7} \\ 1{,}16 \cdot 10^{-6} \\ 5{,}50 \cdot 10^{-6} \\ 2{,}69 \cdot 10^{-5} \end{pmatrix}$$

2) Form the equivalent matrices for the right side to obtain t_r and MER_r.
3) Convert the MER values to equivalent Q values, where Q represents the number of standard deviations the function value is shifted from the respective peak in the dual-Dirac Effective cumulative jitter function. Q(MER) may be obtained in two ways.

$Q(MER) = 0{,}867\,9 - 0{,}707\,2 \log (MER) - 0{,}018 \log (MER)^2$ or

$Q (MER) = qnorm \{ (2/t_d)(MER, 0, 1)\}$

where t_d is transition density, assumed to typically be 0,5.

The polynomial approximation is optimized between 1E-10 and 1E-5 bit error rates. It assumes a transition density of 0,5 and the dual-Dirac Effective jitter cumulative jitter function. Alternatively, the second equation assumes one has access to an inverse cumulative distribution function, such as Mathcad's™ "qnorm",

Once the Q values are determined, they will approximate a straight line with their corresponding t values, such that

$Q_X(t) = m_X*t + b_X$ where x generically refers to left or right scan sides.

Copyright International Organization for Standardization
Provided by IHS under license with ISO
No reproduction or networking permitted without license from IHS Not for Resale

A normal least squares method may be used to smooth the lines for regression and slopes (m_X) and offsets (b_X) may be determined for each. Once done, the level 1 (effective) values for DJ and TJ may be directly calculated. σ_{avg} is the RJ value used in the level 1 DJ and TJ calculations.

$$\sigma_x := \left|\frac{1}{m_x}\right| \qquad \sigma_{avg} := \text{mean}\left(\sigma_r, \sigma_l\right)$$

$$DJ := \frac{-b_r}{m_r} - \frac{-b_l}{m_l}$$

$$TJ := \frac{Q_{tgt} - b_r}{m_r} - \frac{Q_{tgt} - b_l}{m_l}$$

or

$$TJ := DJ + 2 \cdot Q_{tgt} \cdot \sigma_{avg}$$

where $\quad Q_{tgt} = 6.839$

NOTE 1 This method is mathematically equivalent to the 2-point math used in clause 8 to determine level 1 effective jitter from any CDF function with some exceptions:

a) The 2-point method given in [8.2] assumes the CDF has already been measured and/or calculated, including any required smoothing or fitting and that eye width values are accurately available at 1E-6 and 1E-12 cumulative probability levels.
b) This method given here allows any number of points equal to or greater than two. As this method converts directly from measured BER to Effective jitter values, a multiplicity of points, including lower BERs, is advised to provide more data for smoothing functions to reduce measurement noise and improve accuracy.
c) This method scans each side independently rather than measuring the width of the opening (width is the time difference between right and left side scan points at equal BER).

If the sampling voltage level is scanned instead of the sampling time, this methodology, including equations, may also be applied to directly determine signal level Q-factor values as required in some optical measurements.

In order to obtain valid RJ, DJ and TJ extrapolations, a number of precautions should be observed. The curve fitting should be performed on only a subset of the BER data. The maximum BER of this subset should be no higher than BER= 1/(10*pattern length). Also, this subset should extend over at least 3 decades of BER values. For example, for a 2 600 bit pattern, the fit would be done over BER ranging from 1E-5 to 1E-8. This ensures that DDJ does not significantly influence the shape of the curve fit (and the extracted value of RJ.) See also Annex A.

NOTE 2 The minimum value for measured BER is constrained by test time (10 errors are suggested as an absolute minimum to get reasonable statistical confidence).

10.4.3 BERT eye contour measurements

It has been assumed up to this point that the BERT decision detection level is at the mean signal level. The BERT scan technique may be extended to produce a family of limiting bathtub curves (see [6.6]) by varying the signal detection level over the range of signal levels and repeating the scans. The scans may be plotted and analyzed according to the method outlined in [6.6] and a jitter eye mask produced.

As discussed in [6.2.5] and in [6.7] it is possible to scan both sampling time and the sampling voltage level radially from the center of the data eye to develop complete eye contours at varying cumulative probabilities, or to vary the only sampling level to develop vertical “Q factor values”.

--`,,```,,,,````-`-`,,`,,`,`,,`---

Copyright International Organization for Standardization
Provided by IHS under license with ISO
No reproduction or networking permitted without license from IHS Not for Resale

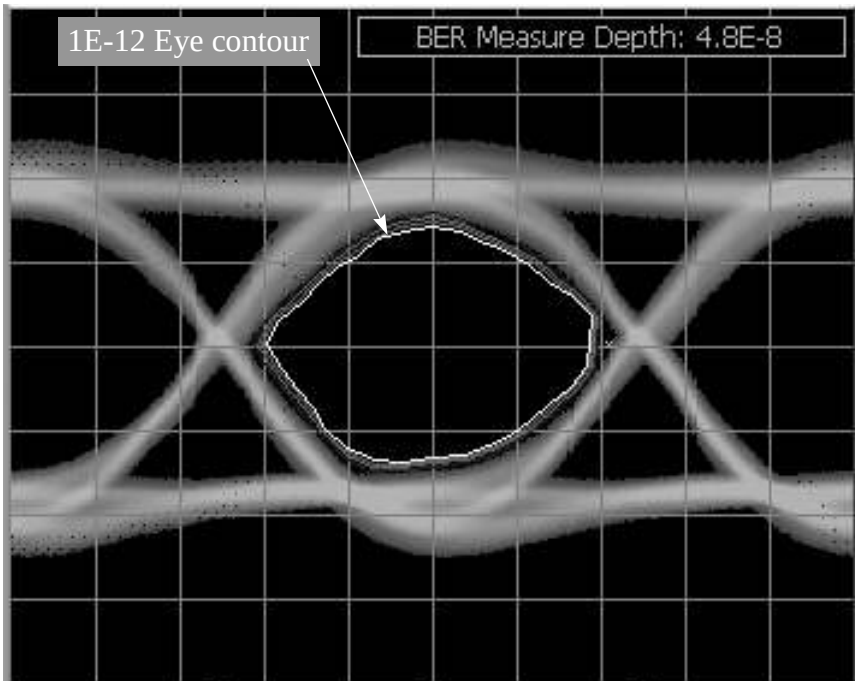

Figure 53 - Example of eye contour measurement and waveform eye

10.4.4 BERT with reference channel

If a BERT has two channels, one may be placed to remain in the center of the eye while the other channel is used to scan the data eye. In this case, bit errors are determined by the instantaneous difference between the two readings. This approach eliminates all the following: the need to know the pattern in advance, the need for a repeating pattern, pattern synchronization, problems with added or deleted fill words or transmitted errors.

Copyright International Organization for Standardization
Provided by IHS under license with ISO
No reproduction or networking permitted without license from IHS
Not for Resale

10.5 Time interval analysis

10.5.1 Introduction

Time Interval Analysis (TIA) uses many accurate, single-shot, edge-to-edge time measurements. The statistics of these measurements may be used to perform jitter calculations. Figure 54 shows an example of a TIA measurement set up and the basic flow used.

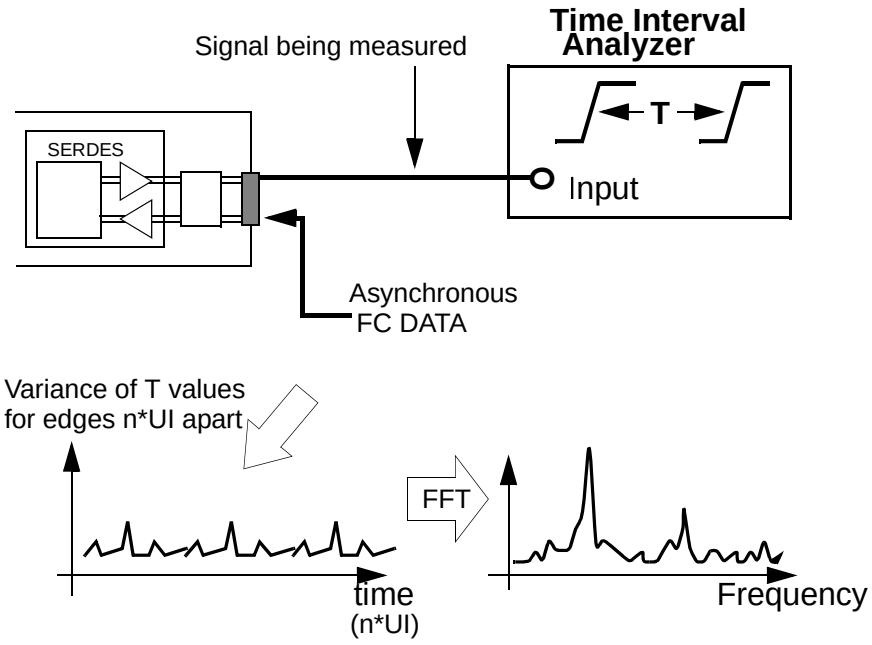

Figure 54 - An example of time interval analysis for jitter spectrum output measurement

Random jitter (RJ) and deterministic jitter (DJ) may be measured using this technique on repeated patterns as well as random data streams. From the RJ and DJ measurements, a bit error ratio (BER), or cumulative distribution function (CDF) with sampling time as the state variable, function may be generated. The total jitter at a given BER level (10^{-12}) may then be determined. There are three methods defined for executing these measurements:

a) bit clock (level 1);
b) pattern marker (level 1);
c) no clock, no marker (level 2).

Each method uses the basic TIA methodology, but with different schemes for acquiring the data.

In the first method, the TIA is used with a Golden PLL. Time measurements are made from the recovered reference clock that has a FC compliance frequency response (i.e., Golden PLL) to the data transitions. This method emulates the actual receiver operation and thus provides the most accurate jitter compliance test, with the low-frequency jitter on the data being tracked by the reference recovered clock.

The second method is used to acquire data when a Golden PLL is not available, or, when jitter on just the data is desired. This method requires a pattern marker to synchronize the jitter measurements relative to a specific location in the pattern. The TIA is capable of extracting the pattern marker from the data based on a unique bit sequence or pattern length. Additionally a pattern marker may be used from another source such as a pattern generator.

The third method operates under a condition where neither a reference clock nor a pattern mark is available. It may be very useful when a reference clock or pattern marker is not available, such as system level test. However, the accuracy of this method is not as good as the first two methods.

--`,,```,,,,````-`-`,,`,,`,`,,`---

Copyright International Organization for Standardization
Provided by IHS under license with ISO
No reproduction or networking permitted without license from IHS Not for Resale

The capabilities of a time interval analyzer assumed here are

a) accurate, single shot measurement of time delay between threshold crossings of clock to data or data to data for a serial data waveform,
b) independent selection of rising or falling edges for the measurement start and stop,
c) ability to specify the number of skipped edges between the measurement start and stop,
d) ability to recover a bit clock with the required frequency response from the input serial data,
e) ability to generate a pattern marker from a repeating serial data pattern.

Equipment with two separate inputs and programmable thresholds may permit effective differential measurements.

10.5.2 Jitter measurements with a “bit clock” (level 1)

In this method, a Golden PLL is required to provide a reference clock derived from the data stream to marker the TIA. This scheme effectively removes low-frequency content from the measured data in a manner similar to that done in a receiver. The configuration used for this option is similar to that of figure 43 or figure 47. The Golden PLL clock is either generated by an internal CDR or is externally available.

The TIA is capable of measuring the time from the data transitions to the reference clock as extracted with the Golden PLL. This results in a clock-to-data histogram that describes the jitter occurring on the data transitions relative to the reference clock. Random and Determinstic Jitter may be estimated by using a tail fit algorithm as described in [9.2.2]. Figure 55 shows a typical clock-to-data histogram for a communication signal. Note the tail fit curves that represent the fitted Gaussian curves.

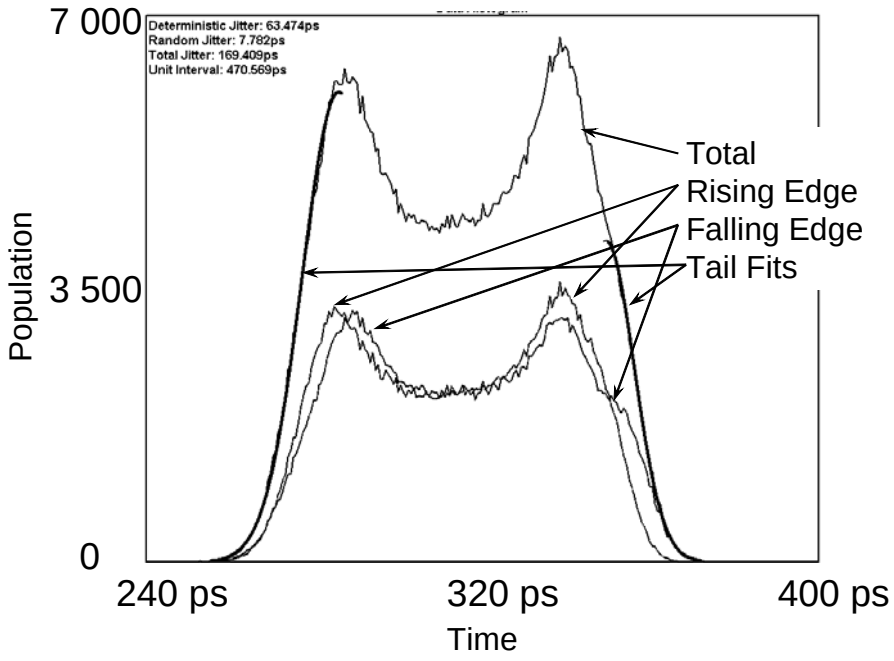

Figure 55 - Data jitter histogram (PDF) measured and referenced to a bit clock

Figure 56 shows the corresponding BER/CDF function and total jitter TJ at BER = 10^{-12} for the data in figure 55.

Copyright International Organization for Standardization
Provided by IHS under license with ISO
No reproduction or networking permitted without license from IHS Not for Resale

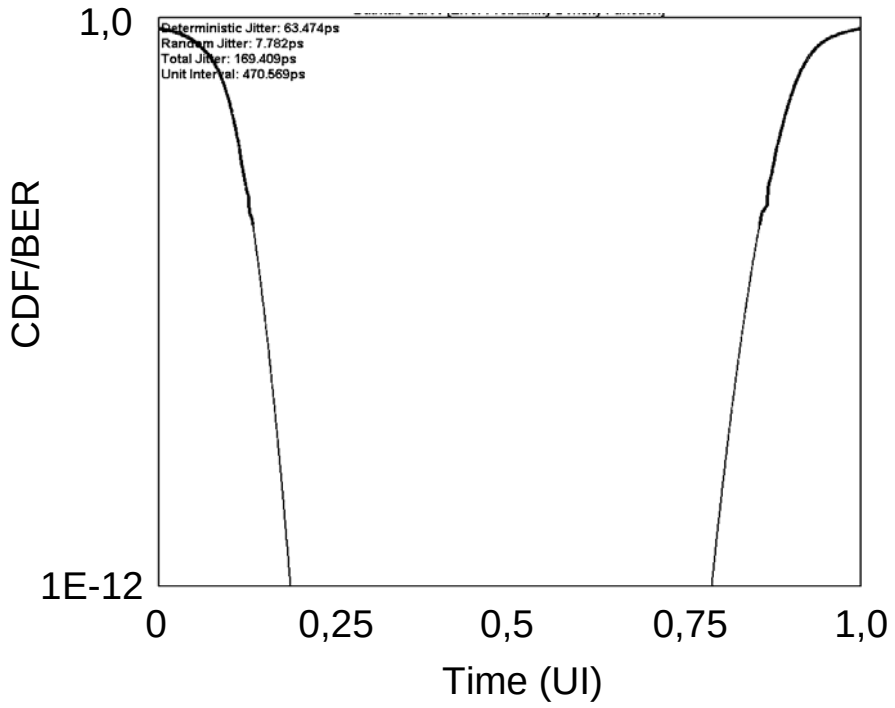

Figure 56 - BER/CDF function corresponding to jitter PDF in figure 55

10.5.3 Jitter measurements with a “pattern marker” (level 1)

With a pattern marker scheme the starting point for the measurement is always at the exact same point in the pattern. This point is called the pattern marker. The benefit of having a stable starting point is the distribution of measurements (see figure 64) is a more accurate level 2 separation of the deterministic, periodic and random jitter components from one another.

The basic setup for this option is shown in figure 57.

Copyright International Organization for Standardization
Provided by IHS under license with ISO
No reproduction or networking permitted without license from IHS Not for Resale

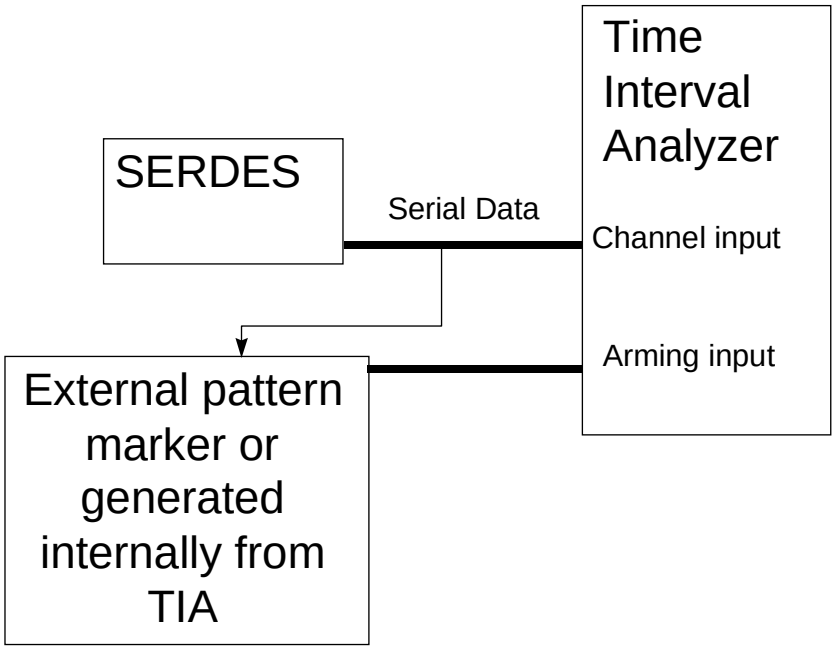

Figure 57 - Measurement setup for “known pattern with marker”

The pattern marker may be generated internally by the TIA based on the identification of a unique bit sequence within the data stream or pattern length of the repeated pattern or externally. No measurements are made from the pattern marker. All measurements are made within the data signal and therefore there is no “trigger” error associated with the pattern since it is not used as a reference signal, but rather as an enabling signal.

The high pass filter characteristic of the receiver jitter transfer function implied by the Golden PLL CDR is applied by using a DSP algorithm thereby eliminating the need for external hardware. All time measurements are made from the same reference edge within the data pattern. This edge is identified by the pattern marker. Many measurements are made of each transition within the data pattern relative to the reference edge. Histograms for each transition are captured from this data.

An FFT of the autocorrelation algorithm of the variance information from these histograms (the residual jitter) is used to estimate the power spectrum density (PSD) function and extract PJ magnitude and frequency and RJ rms over certain frequency band. Alternatively, using the tail fit algorithm described in [9.2.2], RJ may be measured from each of these histograms and this is typically done when there is significant PJ.

Correlated jitter (DDJ + DCD) is measured from the histograms of each transition based on the displacement of each histogram mean relative to integer multiples of the measured bit period.

The total jitter PDF is estimated based on the convolution of the RJ PDF, correlated DJ PDF and the PJ PDF. Integration of the total jitter PDF produces the level 1 BER/CDF function. This function is used in the calculations specified in clause 8 to determine the level 1 DJ and TJ.

Level 2 outputs from this method include the DJ PDF and the TJ at 10^{-12} estimated based on the CDF. This level 2 DJ PDF is a measure that does not assume that the DJ PDF is a dual Dirac function.

Note that this scheme, like the others that use an FFT approach, makes the assumption that all the crosstalk and power supply jitter is captured in the PJ. Any DJ in the form of broadband crosstalk, power supply jitter, or clipped Gaussian jitter that does not present a defined PJ peak will be lumped with the RJ.

Copyright International Organization for Standardization
Provided by IHS under license with ISO
No reproduction or networking permitted without license from IHS Not for Resale

Similarly, LPDDJ may not be detected accurately. Therefore, it must be independently determined that there is no significant broadband crosstalk or power supply jitter present and that no significant LPDDJ exists before using this scheme for level 1 purposes.

A typical data set from this method is shown in figure 58, figure 59 and figure 60.

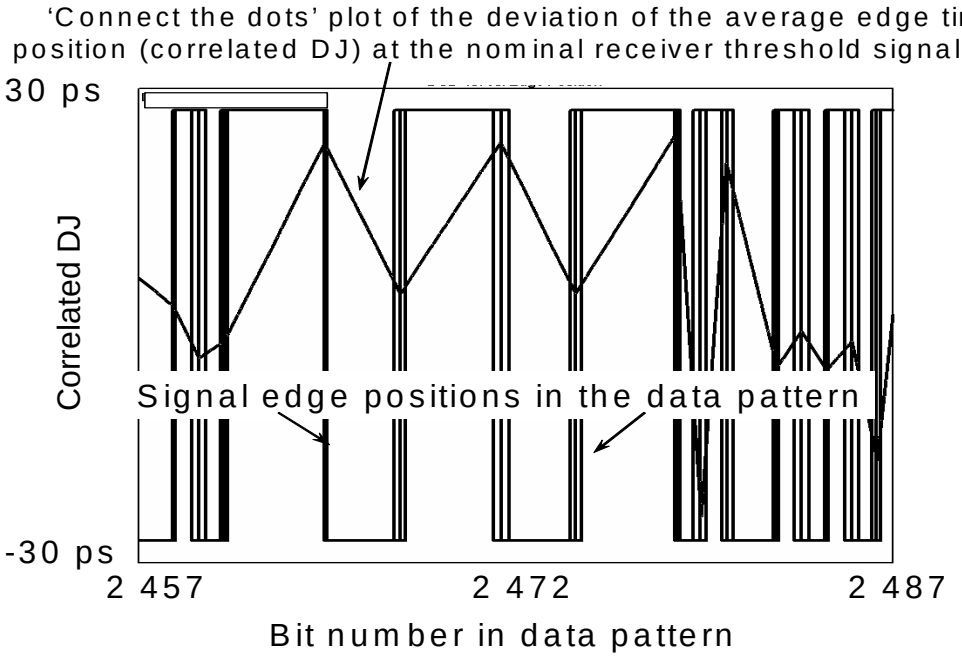

Figure 58 - Correlated DJ distribution as a function of bit number

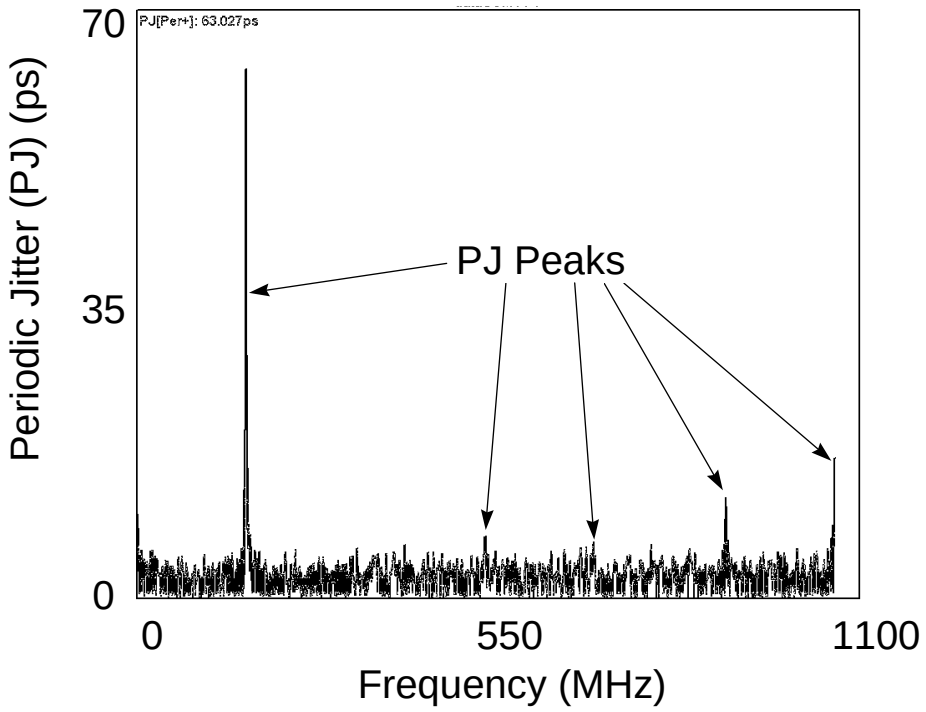

Figure 59 - Power spectrum density (PSD) function of PJ and RJ

Copyright International Organization for Standardization
Provided by IHS under license with ISO
No reproduction or networking permitted without license from IHS
Not for Resale

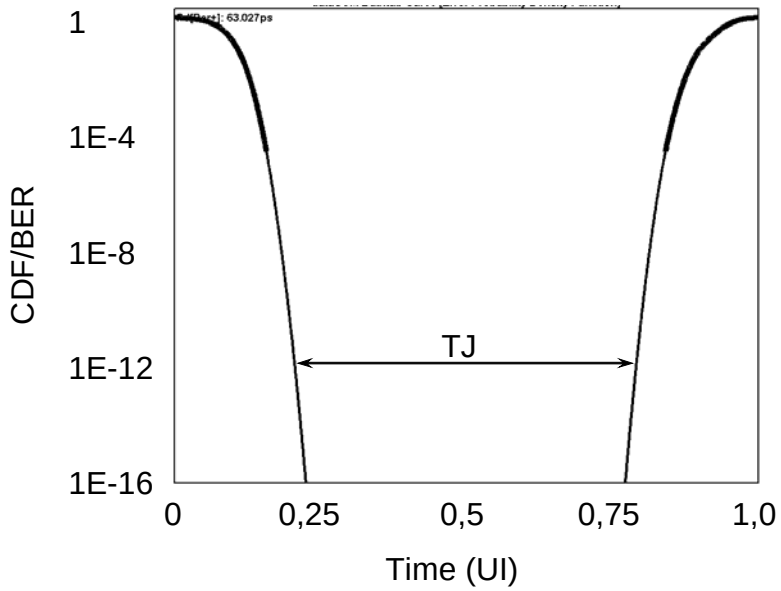

Figure 60 - BER/CDF function measured with “known pattern with marker method”

Total jitter (TJ) at BER = 10^{-12} is shown.

This technique works best with the time interval analyzer for longer patterns, over 20 bits. By using a pattern repeat marker along with a repeating FC data pattern (such as RPAT, CJTPAT, K28.5, etc.. . .) the TIA is able to accurately capture the CDF for the signal.

A level 2 separation of the random jitter (RJ) and deterministic jitter (DJ) is possible. Further separation of DJ into its individual components, periodic jitter, duty cycle distortion and/or data dependent jitter is also possible. As DJ also may contain BUJ that is not periodic an assumption for this separation is that crosstalk and power supply jitter are either not present or are completely described in the PJ content. As with the Enhanced EQ scope method, broadband crosstalk or power supply jitter may affect the accuracy of the RJ calculation. It is also assumed that LPDDJ is not present. This approach provides a discrimination between jitter types and provides information on the patterns polarity, run length and transition density.

Using a pattern marker and known pattern enables the separation of periodic and DCD+DDJ from the uncorrelated deterministic and random jitter components.

1) The delta mean of each measurement group of each UI transition normalized to the nominal UI yields the DJ related to the pattern (DCD + DDJ).
2) The autocorrelation function is the complement of the variance function of each measurement group of each UI transition. By running an FFT on the autocorrelation function the power spectral density function of the uncorrelated jitter may be estimated. The periodic and random jitter components may be determined.
3) The DJ as a function of the UI may be displayed for the entire repeat of the pattern. This shows the pattern transition density for the pattern being used. This enables the user to see the effects of pattern transition density changes on the recovered clock PLL. See, for example, figure 30.

Copyright International Organization for Standardization
Provided by IHS under license with ISO
No reproduction or networking permitted without license from IHS Not for Resale

10.5.4 Jitter measurements with 'no clock and no marker' (level 2)

10.5.4.1 Overview

The basic setup for this method is shown in figure 61.

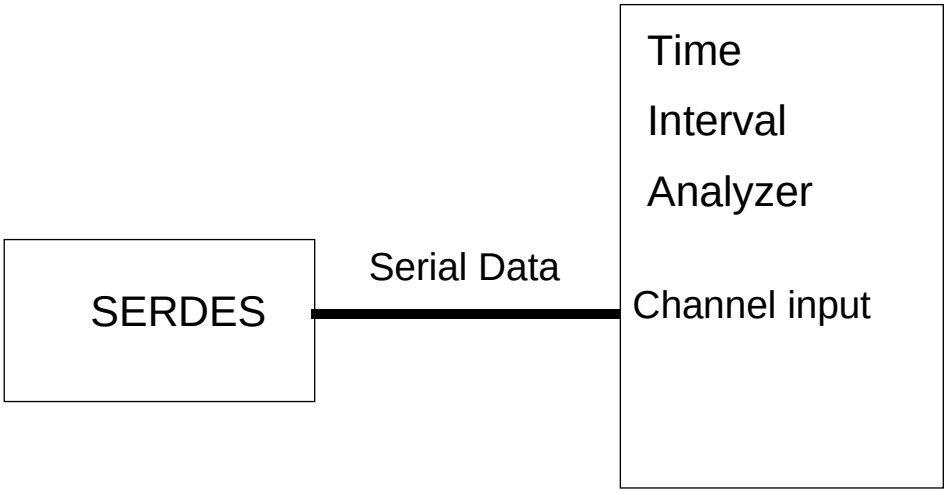

Figure 61 - Setup for TIA measurement without an external timing reference signal

This method requires only a data signal. This method needs neither reference clock nor pattern marker to operate. The methodology uses the bit rate input from the user and measures the data relative to that ideal time. The tool must therefore make assumptions. The raw output is a set of PDFs based on several different UI spacings. This raw output must be processed to include the required Golden PLL effects. The time it takes to obtain necessary raw output for an accurate measurement can be very long and that makes this method not practical for level 1 CDF results.

The reported correlated DJ value is the peak-to-peak value of the mean displacement from ideal from histograms at each UI spacing. This value may be different from the DJ reported with the pattern marker method with longer data patterns due to the likelihood of variations of timing between different starting reference edges. The histograms are composed of rising and falling data and contain a mixture of different bit sequences. The variance record in this method contain some DDJ that is not removed by the averaging. The PJ components may be seen from the FFT of the variance record. RJ is determined from the tail fit algorithm from a number of different UI spacings. TJ is calculated and the bathtub curve generated based

Copyright International Organization for Standardization
Provided by IHS under license with ISO
No reproduction or networking permitted without license from IHS
Not for Resale

on the convolution of the RJ PDF and the correlated DJ PDF. A typical data set from this method is shown in figure 62 and figure 63..

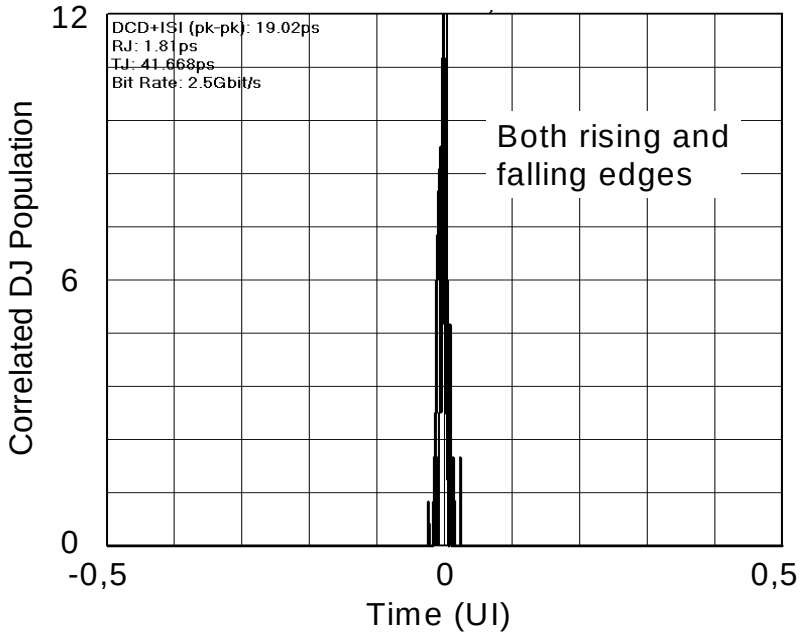

Figure 62 - Correlated DJ histogram measurement

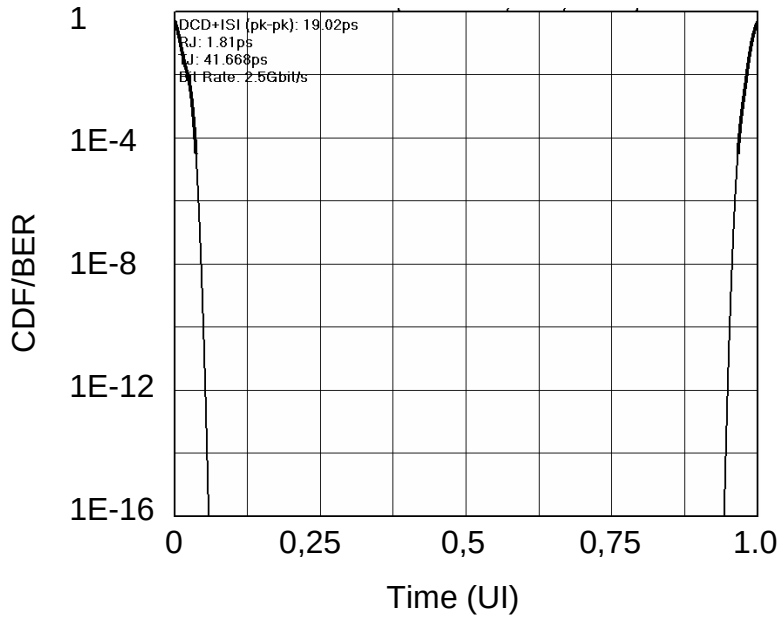

Figure 63 - BER/CDF function measured without an external timing reference

Copyright International Organization for Standardization
Provided by IHS under license with ISO
No reproduction or networking permitted without license from IHS
Not for Resale

10.5.4.2 TIA data reduction procedure

The difference between TIA data and the threshold crossings displayed on an oscilloscope is that each TIA data point is the instantaneous jitter of the second threshold crossing (X_2) minus the instantaneous jitter of the first threshold crossing (X_1) plus some integral number of ideal Unit Intervals (n*UI). That is, each measured value, T, equals (X_2-X_1) + n*UI.

The following list describes the general procedure for acquiring and reducing TIA data:

- Data is taken via a TIA instrument skipping various numbers of edges between the start and stop edge of the measurement. (The selection of starting edge needs to be randomized, since the instrument is more likely to become ready for a new measurement during a long pulse than during a short one. If this is not done, the resulting statistics can be biased.).

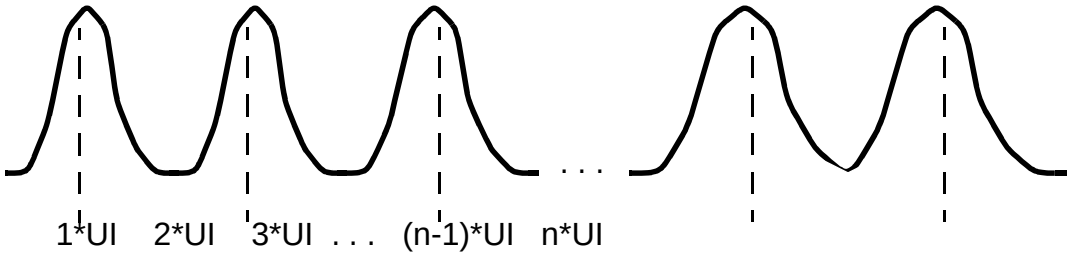

Figure 64 - Histogram of raw TIA data

- When the data is collected into a single distribution, as shown above, a sequence of maxima corresponding to the data edge positions is evident. The data is “binned” according to how many unit intervals the datum spans. Hence, each data point, T_i, is now associated with an integer, n_i. (As the measurements get longer and n gets larger, the individual bin distributions overlap and data may no longer be separated into bins. This limits the maximum value for n in this approach[1].
- The exact value of UI is now determined as the slope of a linear regression fit of the T_i to the n_i. (As a check, the intercept value from this linear regression should be zero.)
- The histograms for the above n bins may now be combined into a single histogram (shown in figure 65) by defining, $Y_i = T_i - n_i*UI = (X_2 - X_1)_i$, the difference of the instantaneous jitter of the two edges.

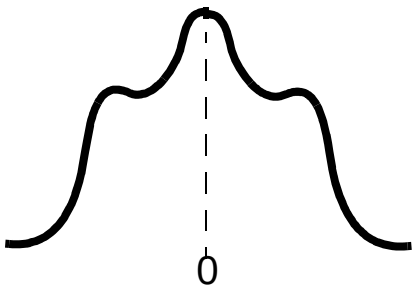

Figure 65 - Histogram of reduced TIA data (multiples of UI removed)

1. More complicated arming capability of the TIA might relax this constraint assuming the equation is valid. For example, if the start and stop events for the measurements could be specified as a fixed edge within a K28.5 character, then the bin widths could be 10 UI wide, rather than just one UI.

Copyright International Organization for Standardization
Provided by IHS under license with ISO
No reproduction or networking permitted without license from IHS Not for Resale

A number of different analyses may now be done from this starting point. These are described in the following subclauses.

10.5.4.3 Total jitter calculation

Level 2 DJ and level 2 RJ may be calculated from the histogram of the Y_i data following the Gaussian tail-fitting procedure described in clause 9. Due to the fact that the TIA data is the difference of two jittered edge crossings (X_2 - X_1), two corrections need to be made.

Second, the value for RJ derived from the Gaussian tail fit is reduced by a factor of 1/sqrt(2). Again, this is because the calculated value is for the difference of the Gaussian components of X_2 and X_1, two sample sets with assumed identical random distributions. The standard deviation of the difference of two identical Gaussian distributions is sqrt(2) larger than the standard deviation of the individual distributions. The distributions are identical in this case because they only differ by integer multiples of UI in the same measurement.

If, however, a data edge to a clock edge from the golden PLL is measured, no correction is needed.

Figure 66 shows the combination (convolution indicated by '*') of two independent uniform distributions to create a triangular distribution and the convolution of Gaussian distributions to create another Gaussian distribution. In each case, the sigma of the convolution is sqrt(2) larger than the sigma of the distributions that were added. For the uniform and triangular distributions, the span covering all but 10^{-12} of the population is smaller than the peak-to-peak span by negligibly small deltas. However, the delta is less negligible for the triangular distribution (10^{-6}) than for the uniform distribution (10^{-12}). In the limit, such additions produce Gaussian distributions (ref: the Central Limit Theorem) where the tails are infinite and this delta is not negligible. The span covering all but 10^{-12} of a Gaussian-distributed population is proportional to the sigma of the distribution. Sigma increases as sqrt(2) as such distributions are added (or subtracted).

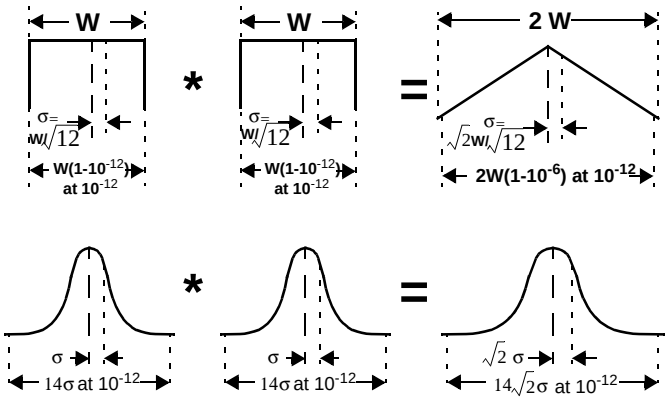

Figure 66 - Background on the 2 versus sqrt (2) issue

10.5.4.4 Data dependent jitter measurement (level 2)

Data dependent jitter due to ISI may be measured during transmission of the 8b/10b K28.5 character because it contains both the minimum (1 UI) and maximum (5 UI) run lengths. Because of alternating disparity, the repeating pattern is 20 bits long. Cable attenuation (and possibly other effects) produce variations in threshold crossing times (relative to an ideal bit clock).

Figure 67 shows an idealized representation of a portion of two adjacent 8b10b K28.5 characters and an idealized waveform eye diagram resulting from passing the repeating data pattern through a long cable. The waveform eye diagram shows all bit times superimposed. Separate rising (falling) traces may be seen

Copyright International Organization for Standardization
Provided by IHS under license with ISO
No reproduction or networking permitted without license from IHS
Not for Resale

caused by each of the rising (falling) edges in the pattern. This waveform eye diagram shows about 250 pS of data dependent jitter.

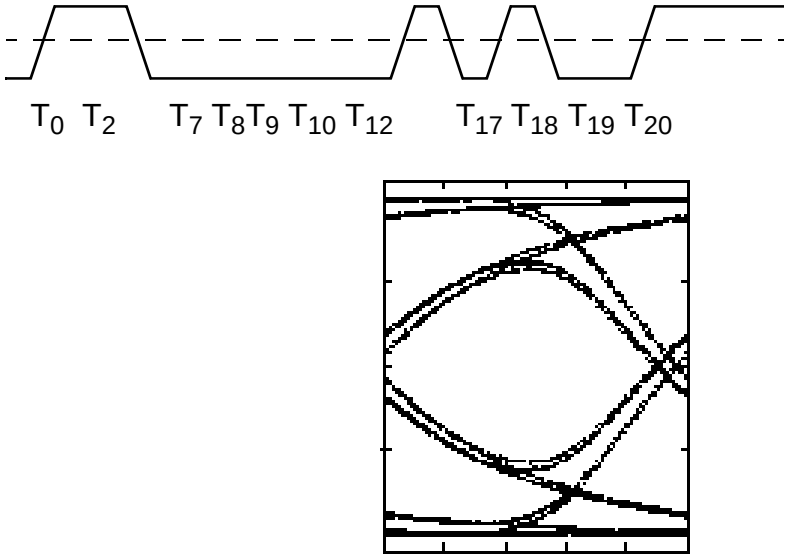

Figure 67 - Portion of two alternating disparity K28.5 characters and resulting waveform eye

The T_n (n = 0,...,20) in figure 67 occur at times n*UI + X_n, where n*UI is the ideal edge timing and X_n is the error (i.e., jitter) for the nth signal edge. The jitter includes both an uncorrelated component and a correlated deterministic component. The uncorrelated component is removed by averaging the population for each value of n. The following discussion in this subclause assumes that the uncorrelated component has been removed in this way. This leaves the value of X as the position of the correlated jitter for each value of n. Correlated deterministic jitter (DDJ+DCD) is the max-to-min of the distribution of the X_i's (with all uncorrelated jitter removed).

The TIA may measure T_m-T_n, for each m and n (m,n=0,...,20). Because the pattern repeats in this case, X_n = X_{n+20}, for any edge, n. A measurement of T_{n+20} - T_n (that is, skipping 10 edges between the start and stop edge) is exactly equal to 20*UI. The distribution of X_i-X_j, is theoretically symmetrical and with zero mean. Each element of the distribution may be viewed as the distance between threshold crossings of two of the edges in the eye diagram in figure 67.

Each pair of threshold crossing times, A and B, is represented exactly twice in the sample data - once as A-B and once as B-A. In particular, the latest and earliest crossings produce both the maximum of the distribution (latest minus earliest) and the minimum of the distribution (earliest minus latest). The peak-to-peak jitter is simply latest minus earliest.

Figure 68 shows a possible distribution resulting from a TIA measurement under the conditions described in this subclause. In figure 68 a histogram of the means of the jitter values for each data edge in the alternating K28.5 pattern is plotted. Note that when plotted in this manner that the peak-to-peak is twice the numerical value of DJ.

--`,,```,,,,````-`-`,,`,,`,`,,`---

Copyright International Organization for Standardization
Provided by IHS under license with ISO
No reproduction or networking permitted without license from IHS Not for Resale

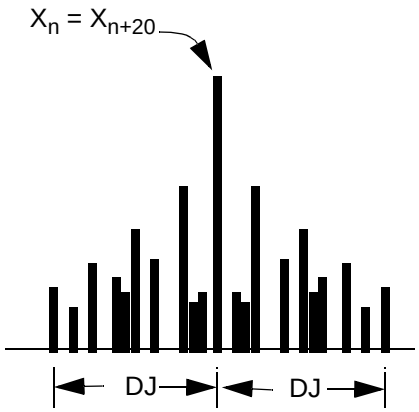

Figure 68 - Distribution of jitter measured by TIA

10.5.5 Power density spectrum of jitter (level 2)

This subclause is retained from MJS because of its historical relevance and its complexity. Other more recently developed methods for dealing with power spectrum density may be better and do not require the the use of the Allan variance.

While detailed information on the spectrum of jitter is not needed to verify jitter output specification compliance, this data may be quite useful for diagnosing the causes of jitter. The power density spectrum discussed in this subclause relates to the total jitter population, not just the residual jitter. This means that correlated DJ has not been removed prior to applying these concepts.

The considerable literature and measurement procedures for frequency stability may be employed to characterize jitter. Several references are the following.

a) “Characterization of Frequency Stability in Precision Frequency Sources”, Jacques Rutman et al, Proceedings of the IEEE, vol 79, number 6, pages 952-960, June 1991. [27]
b) “Characterization of Frequency Stability: Frequency-Domain Estimation of Stability Measures”, Donald B. Percival, P. IEEE, vol 79, number 6, pages 961-972, June 1991 [28].
c) “Statistics of Time and Frequency Data Analysis”, David W. Allan et al, Chapter 8 of “Time and Frequency: Theory and Fundamentals”, NBS Monograph 140, May 1974 [29].

The area in this body of literature that seems most suited to being adapted for use with TIA measurements is the Allan variance shown in equation 10:

Equation 10 – Allan variance

$$\begin{aligned}\sigma_X^2(\tau) &= \frac{1}{2}\langle (X_2 - X_1)^2 \rangle \\ &= \langle X^2 \rangle - \langle X_2 X_1 \rangle \\ &= var(X) - \Re_X(\tau)\end{aligned}$$

The first equality in equation 10 is the definition of the simplest form of Allan variance, but using the edge position, X, rather than the first backward difference of X (a measure of frequency) that is standard in the definition. The variable, τ, is the time delay between the ideal threshold crossings, n_1*UI and n_2*UI. τ is

Copyright International Organization for Standardization
Provided by IHS under license with ISO
No reproduction or networking permitted without license from IHS Not for Resale

then (n_1-n_2)*UI, so the Allan variance may be viewed as $\sigma^2_X(n)$, that is, a function of the number of UI between edges, $n=n_1-n_2$. The < > brackets indicate a (theoretically infinite) time average.

The second line in equation 10 is simple algebra, but may create difficulty if the measured data is not filtered, since X is, in general, not stationary (the variance is infinite due to the wander of the transmitting frequency source). The motivation for this form is that the second term, <X1X2>, is the autocorrelation function, $\Re_X(\tau)$, (again, this may be viewed as a function of n, the number of UI that the measurement spans). The Fourier transform of $\Re_X(\tau)$ is the spectral density function of the jitter[1].

As an example, consider jitter that varies sinusoidally: $X(t) = A\cos(\omega t + \Phi)$. The Allan variance is then given by equation 11:

Equation 11 – Allan variance with sinusoidal jitter

$$\begin{aligned}\sigma_X^2(\tau) &= \frac{1}{2}\langle[X(t+\tau)-X(t)]^2\rangle \\ &= \frac{A^2}{2}\langle[\cos(\omega(t+\tau)+\Phi)-\cos(\omega t+\Phi)]^2\rangle \\ &= \frac{A^2}{2}\langle[1-\cos(2\omega t+2\Phi+\omega\tau)]\times[1-\cos(\omega\tau)]\rangle \\ &= \frac{A^2}{2}[1-\cos(\omega\tau)]\end{aligned}$$

As expected, the first term in equation 11, $A^2/2$, is the variance (i.e., mean squared value) of a sinusoid. The second term is the autocorrelation function of a sinusoid. The Fourier transform of this second term yields a single spectral line at ω.[2]

The power spectral density of the jitter is calculated from the reduced TIA data as follows:

1) For each integer value, n, the average squared value of the Yi's that have their corresponding ni = n is calculated. (These are statistics of the individual "bumps" in the histogram of figure 64.) One half this value for each bin is the value of $\sigma 2X(\tau = n*UI)$ for the corresponding n. That is, if there are num_i Y_i's corresponding to $n_i = n$, then $\sigma^2_X(\tau = n*UI) = [\Sigma(Y_i)^2]/[2*num_i]$.

---

1. A few more words about the difference between this formulation and the standard Allan variance definition: the variable y_i in the standard Allan variance definition, $\sigma_y^2(\tau) = \frac{1}{2}\langle(\bar{y}_2-\bar{y}_1)^2\rangle$, is a backward difference of the edge position (i.e., phase), X_i. Hence, a flat spectral density for the jitter is equivalent to a spectral density for frequency variation that rises at 6 dB per octave because frequency is the derivative of phase. Similarly, a frequency variation with flat spectral density produces a jitter spectral density that falls at 6 dB per octave.
2. Because the mathematics is linear, this example may be extended to jitter that is the weighted sum of any number of sinusoids of any frequencies. That is, if the jitter is given by $X(t) = \sum_i a_i\cos(\omega_i t + \Phi_i)$ then the Allan variance is:

$$\sigma_X^2(\tau) = \sum_i \frac{a_i^2}{2}[1-\cos(\omega_i\tau)]$$

--`,,```,,,,````-`-`,,`,,`,`,,`---

Copyright International Organization for Standardization
Provided by IHS under license with ISO
No reproduction or networking permitted without license from IHS Not for Resale

2) The jitter variance, var(X), is the average value of these values of $\sigma^2_X(n)$. Subtracting the $\sigma^2_X(n)$ sequence from this value yields an estimate of the autocorrelation sequence. The discrete Fourier transform of this sequence is the spectral density function (power density) of the jitter. (This process is depicted in the measurement setup -> time domain plot -> frequency domain plot sequence of figure 54.)

10.6 Real time oscilloscope methods

10.6.1 Overview

Figure 69 shows a block diagram of a RT scope acquisition, analysis and display system.

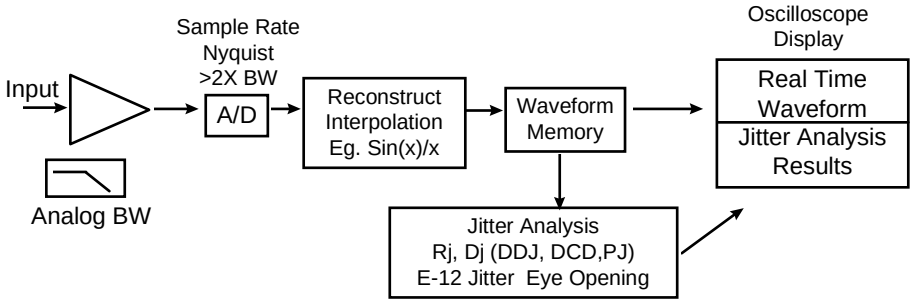

Figure 69 - Real-time acquisition, analysis and display

The sampling rate of a real time system may be determined by the measurement bandwidth. Nyquist theory states that the sampling rate needs to be at least twice the spectral content of the input signal to prevent aliasing and allow the original signal to be perfectly reconstructed. Most high-performance real-time oscilloscopes meet this requirement because the spectral content (and risetime) is limited by the analog bandwidth of the input amplifier. Thus, the analog signal is accurately reconstructed. Sin(x)/x interpolation may further improve the accuracy of the reconstructed waveform.

In real-time (RT) sampling, the digitizer (shown in figure 69 as the A/D) operates at maximum speed to acquire as many points as possible in one sweep, with a single trigger. The sample interval is the inverse of the sample rate. The waveform is then reconstructed using interpolation (e.g., sin(x)/x) and transferred to waveform memory. This data is then rastorized and sent to the oscilloscope display where the waveform may be analyzed visually. The waveform data represents vertical resolution of 8 bits (256 levels), with horizontal time and resolution determined by the record length and sample interval. For example, if the sample rate is set to 20 GS/s (50 ps/pt) and the record length is set to 20 Mpts, then the actual time that is captured is 1ms (50 ps/pt times 20 Mpts). The captured waveform represents 1 ms of contiguous, continuous data containing both time and amplitude information.

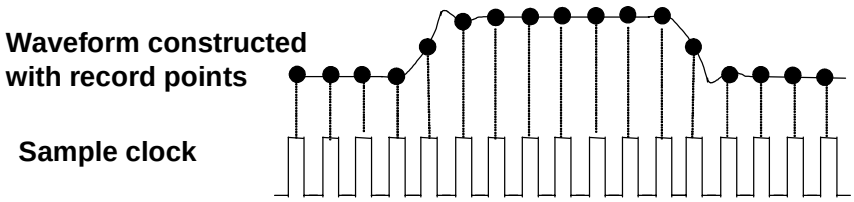

Figure 70 - Real-Time (RT) sampling (single trigger event)

Figure 71 shows a real-time capture of a Fibre Channel Idle sequence. The top trace is the full record and the bottom trace is a magnified view that reveals the individual bits. The waveform is captured with a single trigger event.

Copyright International Organization for Standardization
Provided by IHS under license with ISO
No reproduction or networking permitted without license from IHS
Not for Resale

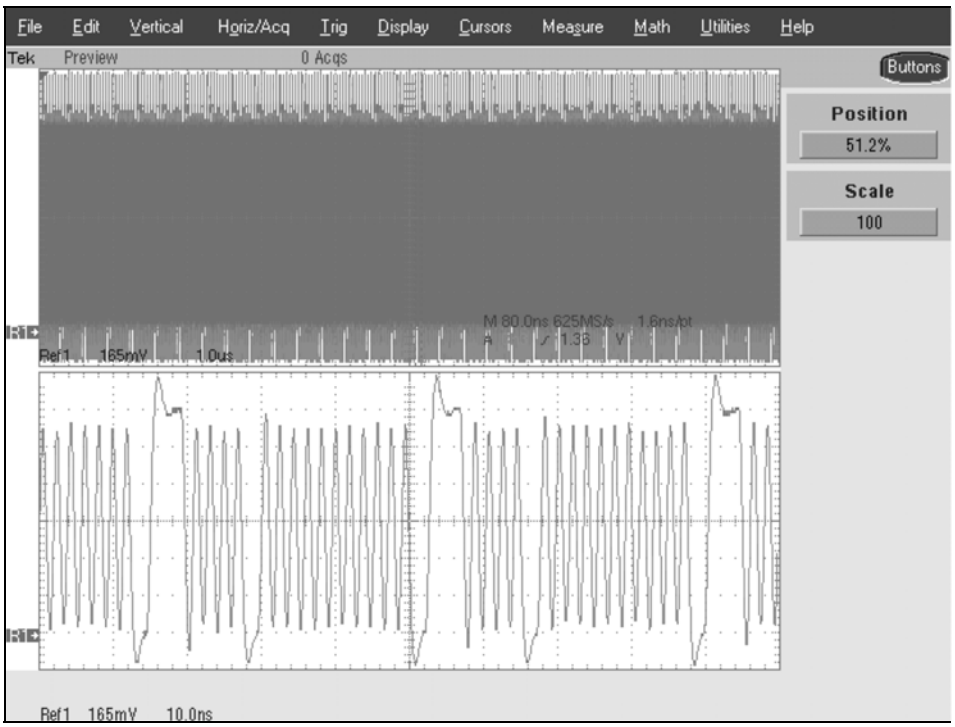

Figure 71 - Fibre Channel IDLE sequence

10.6.2 Clock recovery and waveform eye diagram

The jitter timing reference described in 6.2.3 is recovered from the real time acquisition by establishing a reference level (represented by the dotted line running horizontally through the center of the waveform on the left hand side of figure 72). Each crossing of the reference level by the acquired waveform determines an edge location. Because the acquired waveform may be interpolated between sample points, the usable edge timing resolution is much finer than the oscilloscope's sample interval. The clock is recovered using a software PLL with the loop BW characteristics also defined in 6.10 and is derived from a combination of the rising and falling edges at the nominal switching threshold. The difference between the recovered clock and the acquired edge location on the horizontal axis represents the time interval error (TIE) or "jitter trend" waveform. The TIE waveform is the basis of the spectrum approach to jitter measurements in 10.6.3 .

A waveform eye diagram is created by overlaying many small sections of the acquired waveform, where each section is typically two unit intervals in length. The recovered clock is used as the timing reference for aligning the individual sections. This eye rendering technique is shown on the right hand side of figure 72. Waveform mask testing may be performed by defining a mask and detecting collisions with this mask. Waveform mask testing is useful for detecting transient waveform behavior that may cause bit errors, that cannot be detected by making measurements in only the time domain. Rendering a waveform eye with RT acquired data provides the additional benefit that the eye diagram is independent of trigger jitter, since all the data is acquired with one trigger event. This is in contrast with ET waveform eye diagrams that rely on multiple trigger events.

Oscilloscope waveform eye diagrams and mask testing should not be confused with the jitter eye diagram and mask testing as described in clause 5.

Copyright International Organization for Standardization
Provided by IHS under license with ISO
No reproduction or networking permitted without license from IHS Not for Resale

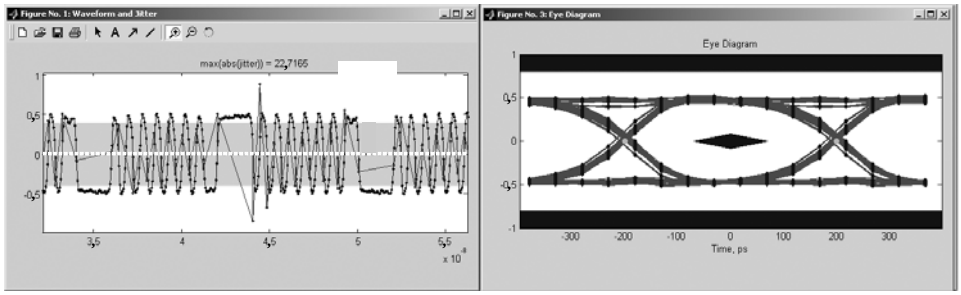

Figure 72 - Recovered clock, TIE trend and waveform eye diagram

10.6.3 Spectrum approach to jitter measurements

10.6.3.1 Overview

As discussed above, a waveform eye diagram and mask is different from the jitter eye and jitter mask discussed in figure 22. The following technique describes how a jitter eye diagram may be created using real-time oscilloscope data. A CDF plot (bathtub curve) is created and an 10^{-12} jitter eye opening measurement is provided.

In this approach, it is required that the serial data signal being measured consist of a periodically repeating pattern and that the length of the repeating pattern is known. In this example, the signal in figure 71 shows an acquired waveform of the Fibre Channel IDLE sequence of K28.5-D21.4-D21.5-D21.5. The length of the pattern the instrument may accommodate is a function of the record length and pattern lengths in excess of 5000 are typically possible.

Using the spectrum approach jitter is measured as follows:

1) An oscilloscope acquires a single shot or real time acquisition of the data signal. To most accurately capture the jitter, it is essential the acquisition system have the best available timing accuracy, signal to noise, effective bits and signal fidelity. Because the acquisition is captured from a single trigger event, trigger jitter does not enter into the jitter calculations.
2) The acquired waveform is compared to a reference level to determine the actual time of each waveform transition using interpolation between the samples. Different reference levels may be used for rising versus falling edges, to model the behavior of a receiver circuit with input hysteresis.
3) The clock is recovered from the serial bit stream using a software Golden PLL as described in the previous section. The actual time of each data transition is subtracted from the time of the associated clock edge, resulting in a TIE waveform or “jitter trend”.
4) An FFT (Fast Fourier Transform) is performed on the TIE waveform. This spectrum is the spectrum of the jitter in the acquired signal. Before the spectrum is calculated, an important step is taken to ensure accuracy of the FFT result. For the points where there is no data edge between two or more symbols, the associated TIE values may be estimated by interpolation. The jitter value array is marked “interpolated” at these symbol locations so that it may be distinguished from jitter corresponding to transitions. The spectrum approach yields the various components of the total jitter in two steps. In the first step, RJ and DJ are separated. In the second step, DJ components are separated.

Copyright International Organization for Standardization
Provided by IHS under license with ISO
No reproduction or networking permitted without license from IHS Not for Resale

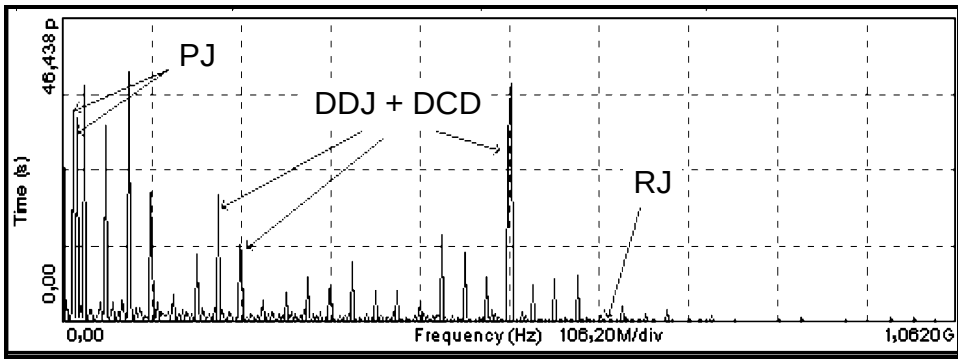

Figure 73 - Frequency spectrum of time interval error (TIE)

10.6.3.2 RJ/DJ analysis (level 2)

The spectrum approach separates the total jitter into the two categories of DJ and RJ, based on the following observations: RJ is assumed to be Gaussian; its spectrum has no distinct peaks. DJ is periodic in the time domain since it is assumed that the serial data signal consists of a periodically repeating data pattern; it has a spectrum of impulses (figure 73). The different properties of DJ and RJ are obvious. Various approaches may be taken to separate the impulses from the 'noise floor,' but shall accommodate variations in the FFT, resulting from FFT resolution, frequency spreading, windowing, etc. The standard deviation parameter of the RJ may be obtained by computing the RMS value of the noise floor in the frequency domain. The DJ-only spectrum is recovered by setting to zero all bins from the TJ spectrum that are attributable to RJ. A time-domain record of the DJ is obtained by performing an inverse FFT on this DJ spectrum. The peak-to-peak time value, that is the parameter of interest for DJ, is found directly from this time-domain waveform. Note that locations marked earlier as "interpolated," are not counted when determining the peak-to-peak value.

Note that this scheme, like the others that use a spectrum approach, makes the assumption that all the crosstalk and power supply jitter is captured in the PJ. Any DJ in the form of broadband crosstalk, power supply jitter or clipped Gaussian jitter that does not present a defined PJ peak will be lumped with the RJ. Similarly, LPDDJ may not be detected accurately. Therefore, it must be independently determined that there is no significant broadband crosstalk or power supply jitter present and that no significant LPDDJ exists before using this scheme for level 1 purposes.

10.6.3.3 Analyzing DJ components (level 2)

After obtaining the spectrum of DJ in the previous step, three components of DJ [DDJ (e.g., that caused by ISI), DCD and the periodic components of BUJ (PJ)], may be obtained. Again, these components of DJ consist solely of impulses. The DDJ+DCD jitter components may be separated from the PJ component based on the following observations: all impulses due to DDJ+DCD components appear at multiples of 0,5/N, where N is the data pattern length, the number of symbols in the data sequence's repeat pattern. Any remaining impulses are due to PJ (refer to figure 73). With PJ thus isolated, an inverse FFT is performed to recover PJ in the time domain. The parameter of interest for the PJ is the peak-peak value of its time domain record. Then using only the portions of the DJ spectrum attributable to DDJ+DCD, an inverse FFT is performed to recover DDJ+DCD in the time domain. This time-domain record may now be separated into two records, where one record contains only the rising edges and the other contains only the falling edges. A histogram is computed for each. These two histograms may have similar shapes if the data signal has alternating disparity. The method used to distinguish DCD and DDJ components from each other is based on the following properties.

a) The difference between the mean values of the two histograms is DCD.
b) The average of the peak-to-peak values of the histograms is DDJ.

--`,,```,,,,````-`-`,,`,,`,`,,`---

Copyright International Organization for Standardization
Provided by IHS under license with ISO
No reproduction or networking permitted without license from IHS Not for Resale

One intermediate result of this procedure is a time-domain record of the PJ waveform, that could aid in identifying the source of the periodic jitter. No other method of jitter analysis is known to be capable of producing such a waveform.

Because the rising edge and falling edges may have significantly different DJ distributions one must use the entire DDJ/DCD population to determine the peak-to-peak values. Separation of the rising and falling edge population may be used to calculate DCD as the difference of the means of the respective edges. DDJ is the difference between the entire DDJ/DCD and the calculated DCD.

Longer patterns such as CJTPAT may have a broad spectral content if the signal contains significant DCD and DDJ. To ensure that peaks associated with PJ can be distinguished, the analyzed waveform should include 100 or more pattern repeat cycles. This requirement effectively causes the spectral resolution to increase as the pattern length grows.

10.6.3.4 Obtaining the jitter eye opening

After deterministic jitter and random jitter have been separately characterized, the jitter eye opening may be measured using a bathtub curve analysis. From the DJ/RJ separation, the time record of DJ (including periodic components of BUJ (PJ)) is obtained. The time-domain histogram of the DJ is now computed, without counting those locations marked “interpolated.” The time-domain histogram of the RJ is synthesized based on its Gaussian model, using the standard deviation obtained during the DJ/RJ separation. The histograms of DJ and RJ are then convolved to get the recovered histogram of total jitter. This recovered TJ histogram, when properly normalized, may be interpreted as the probability density function (PDF) of the TJ. Finally, the bathtub curve (CDF curve, as shown in figure 74) is obtained by integrating this PDF and normalizing for the assumed 50 % edge density. The right side of the bathtub curve is the CDF defined in figure 20 as the “Leading Edge” CDF. The left side is the CDF defined by the “Trailing Edge”. The jitter eye opening at the desired BER (in this case 10^{-12}) is measured from this curve.

The level 2 total jitter (TJ) may be derived from the above analysis by equation 12.

Equation 12 – Total jitter calculation

$$TJ = UI \times [1 - \text{jitter eye opening}]$$

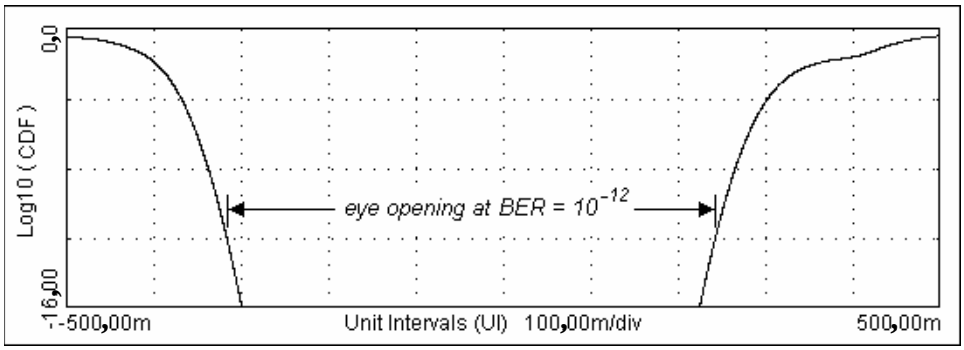

Figure 74 - Jitter analysis bathtub curve

10.6.3.5 Deterministic jitter and total jitter (level 1)

The level 1 DJ and level 1 TJ may be determined by direct application of the methodology detailed in 8.3. The level 1 CDF to be used is that created in 10.6.3.4. This CDF is valid for level 1 use only if it has been determined that there is no broadband crosstalk or power supply jitter (i.e. if the crosstalk and power supply jitter that is present is independently determined to consist of only discrete spectral components). Otherwise the results are level 2 only.

Copyright International Organization for Standardization
Provided by IHS under license with ISO
No reproduction or networking permitted without license from IHS Not for Resale

10.6.3.6 Jitter eye diagram

A family of bathtub curves that defines the Jitter Eye Opening in figure 21 may be achieved using this technique. The bathtub curve in figure 74 was created by setting the signal level to the nominal switching level, however, the same analysis may be performed by setting the signal level at a higher and lower voltage level as defined by the standard. To insure that the analysis is done on the same waveform (acquired with the same trigger), the analysis should be performed without re-acquiring. It is also recommended that adequate interpolation be used for high and low levels to more accurately reconstruct the signal under test. Error in edge detection at the nominal switching level is very small even if linear interpolation is used. However, at high and low levels, linear interpolation may introduce error. At levels other than the nominal switching level use of a more robust interpolation algorithm such as sin(x)/x will result in more accurate measurements.

As of this writing, the following limitations and/or issues are known about the spectrum approach on real-time acquired data:

a) This method requires at least 50 (preferably 100) repeats of the pattern with no inserted fill words in the acquired data.
b) PJ may appear as DDJ if it is synchronous with the pattern repeat frequency or one of its harmonics. This does not affect the TJ result or the validity of the CDF if the signal has no non-periodic BUJ.

See also [6.2.5] for general issues involving conversion of noise to jitter.

10.6.4 Jitter noise floor of RT scope oscilloscope waveform data

Because RT scope eye diagram and jitter analysis techniques do not rely on multiple trigger events to capture data, trigger jitter is not a concern. Therefore, the jitter noise floor is on the order of the aperture uncertainty specification of the oscilloscope. Current technology demonstrates a jitter noise floor of less than 1 ps rms.

11 Jitter / signal tolerance measurement methodologies

11.1 Overview

Link jitter / signal tolerance at an interoperability point generally refers to the ability of the portion of the link downstream from the interoperability point link to continue operation within specifications with the signal of interest present at the input to the interoperability point. For MJSQ the signal of interest is the signal at the interoperability point in the portion of the link containing the receiver. All properties of the signal may affect the jitter tolerance, not just the jitter content. The term jitter tolerance is retained because of its common usage.

Receiver jitter tolerance is a measure of how well the Clock and Data Recovery Unit (CDR) in the link receiver tolerates various forms of jitter. Two aspects of CDR behavior are important. The first is how much horizontal eye closure the CDR may tolerate with its recovered bit clock strobe optimally placed in the eye. This reflects how well the CDR centers its recovered bit strobe in the data eye and how small the setup and hold times are for the CDRs input flip flop. The second is how the CDR recovered bit clock wanders as it attempts to track jitter within or below its passband frequency. The second item is very much influenced by what jitter spectral components are present in the serial data and what system noise is coupled to the CDR bandpass filters. All jitter tolerance properties may be affected by other signal properties such as amplitude and rise time.

As jitter tolerance is a measure of how much jitter may be handled, it is fundamentally a bit error ratio measurement. A bit sequence with a known quantity of jitter is provided to the input and the error ratio of the receiver is measured. Jitter tolerance requires an error detector instrument used in conjunction with a pattern source and jitter generator. Being a bit error rate measurement, jitter tolerance generally requires long test times to ensure 10^{-12} bit error ratio performance.

Copyright International Organization for Standardization
Provided by IHS under license with ISO
No reproduction or networking permitted without license from IHS Not for Resale

Thus jitter measurements at the component level may be done using an error detector instrument in conjunction with a pattern source and jitter generator. For device level and system level testing, the FC port needs to report errors. This document does not discuss methods to report errors at the protocol level. See [11.2.7].

The key specification for a jitter tolerance measurement is the specification of a jitter tolerance mask. The jitter tolerance test recommended here attempts to duplicate actual jitter conditions. A jitter tolerance mask with eye closure partitioned into a frequency sweep component, a random jitter component and a deterministic jitter component is described for a comprehensive and consistent source. Table 7 shows an example of the jitter components for the jitter tolerance test at an interoperability point. The values shown are from 2004 FC-PI-2 revision 5.0 for 4,25 Gbit/s Beta R.

Table 7 - Jitter tolerance components

Component	Quantity (UI) (peak-to-peak)
Non-sinusoidal deterministic jitter	0,33 (NOTE 1)
Total jitter without SJ applied	0,52
Random jitter Jitter frequency spectrum flat across f_c/166 7 to f_c/2 (NOTE 2) (Example: fc=4,25 Gbit/s; 2,55 MHz to 2,125 GHz)	Adjusted to produce total jitter required without SJ (TJ=0,52 in this case) (Note 1)
Sinusoidal applied jitter Sweep from f_c/25 000 to > f_c/200 (Example: fc=4,25 Gbit/s; 170 kHz to > 21,25 MHz)	See Figure 3
Total jitter with SJ applied For SJ > f_c/1667	Approximately0,62

NOTE 1 It is measured using the jitter timing reference described in this document.

NOTE 2 It has always been easy to say that RJ should have spectral content up the half-baud frequency. In practice, however, this is extremely difficult and not necessary. Limitations have to do with F/PM modulator and clock input band limitations for pattern generators. 100 MHz is a reasonable minimum even for 4G systems. Mandating equipment to excite above 100 MHz eliminates some cost effective and adequate options. A primary source of RJ is at the clock source. This RJ is typically rolled off within a few MHz. Optical links generate broadband RJ, however, the real challenge to receivers is to control the amount of jitter, including RJ, that cannot be tracked and must be dissipated. The basic requirement is to calibrate a signal tolerance tester with RJ (integrated into UI) that is above a CDR's tracking response. The upper frequency value does not matter if it is above this tracking response frequency. Today's CDRs will not track (much) above 20 MHz so a conservative upper limit on the RJ frequency is 100 MHz.

Using the jitter tolerance components in the signal, a thorough test may be conducted including the interaction between the various real components. The passband characteristics are determined using sinusoidal jitter sweep from 42,5 kHz to >5 MHz. The tolerance to high-frequency effects such as ISI and asymmetric rise and fall delay through active circuits is tested using the non-sinusoidal, high-frequency component. The simultaneous excitation with all three jitter components using a broad test pattern measures any interactions between the jitter components.

Jitter tolerance tests are also performed under the stressed condition that the receiver bit clock frequency is different from the transmitter bit clock frequency which is in the same FC port as the receiver. Thus, the receiver is asynchronous with the transmitter in the port under test. Test patterns to be used in jitter tolerance testing are defined in Annex A. In other words, the jitter tolerance test is valid when the device is under conditions that are expected in use.

--`,,```,,,,````-`-`,,`,,`,`,,`---

Copyright International Organization for Standardization
Provided by IHS under license with ISO
No reproduction or networking permitted without license from IHS Not for Resale

11.2 Jitter tolerance test methodologies

11.2.1 Overview

An important measurement in determining link integrity is the characterization of the ability to tolerate inputs containing jitter yet recover error-free data. This is accomplished by inputting a signal with well controlled jitter and amplitude characteristics while measuring the BER at the output of the receiver. As the source signal is modified in amplitude and/or spectral content, the change in BER is measured. This subclause describes some useful test methodologies for testing jitter tolerance.

The term 'jitter' tolerance is retained in this document because of its historical usage but the behavior of interest is really the total signal tolerance including both jitter and amplitude. It is well known that receivers exhibit different BER performance under different amplitude conditions even if the jitter is constant. In general a receiver will tolerate more jitter if the signal has higher amplitude. It is implicit in the terminology that 'jitter tolerance' is either a convenient substitute for the term 'total signal tolerance or that the amplitude of the signal has been reduced to minimum allowed by specification when the jitter tolerance is measured.

11.2.2 General methodology

Figure 75 shows the general methodology used for calibrating a signal and subsequently applying it to an interoperability point in a link. Note that the entire signal including both time and amplitude qualities require control to accurately determine tolerance.

The required signal is setup into the text fixture calibration load. After the signal is adjusted to have the desired properties the test fixture calibration load is removed from separable connector (half of the connector stays with the calibration load) and the cable from the signal synthesizer is connected to the interoperability point of interest.

There will be changes to the signal applied to the interoperability point compared to those measured with the calibration load because the load and general environment under test is probably somewhat different from the calibration load. The properties of the signal used with the calibration load should have been developed with the understanding that these changes will occur. Since the changes were caused by the the link under test not matching the calibration load it is the responsibility of the link to accommodate whatever changes the link under test causes.

This methodology has the considerable practical advantages that the test fixture calibration loads may be designed to accommodate commercially available instruments and that the signal applied to the test point is calibrated the same way regardless of the link under test.

Copyright International Organization for Standardization
Provided by IHS under license with ISO
No reproduction or networking permitted without license from IHS Not for Resale

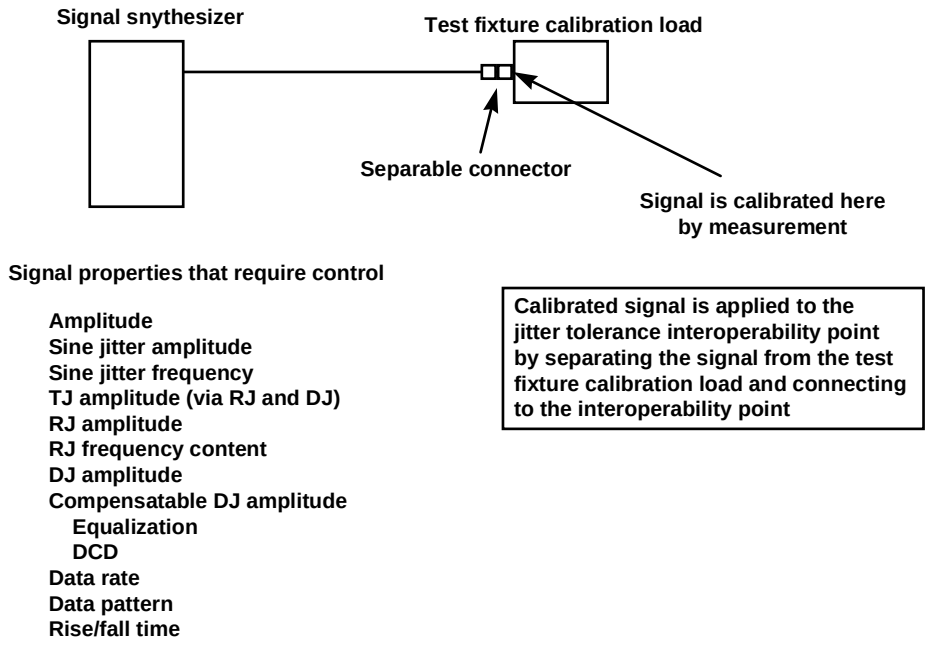

Figure 75 - General methodology for jitter / signal tolerance measurements

11.2.3 Sinusoidal jitter modulation

Sinusoidal jitter, SJ, may be introduced by sinusoidal modulation of the serial data bit sequence. This technique is similar to the one used by SONET. The frequency may be swept to determine the loop bandwidth of the CDR. The variable sinusoidal modulation of a bit sequence is accomplished by using a frequency synthesizer to modulate the clock source used for the pattern generator as shown in figure 76.

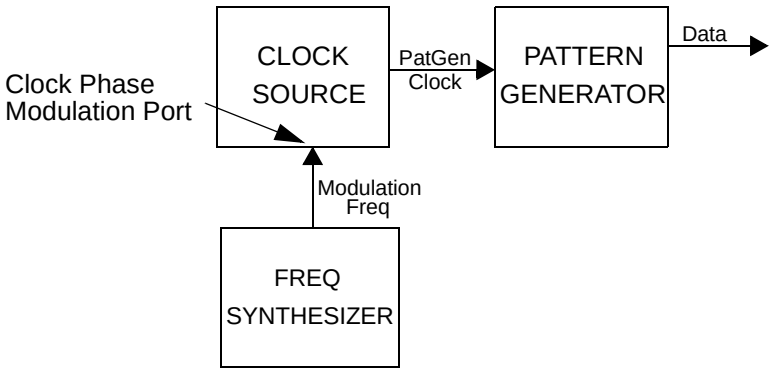

Figure 76 - Sinusoidal jitter modulation

11.2.4 Jitter / signal tolerance sources

11.2.4.1 Overview

Four sources of jitter are provided: compensatable DDJ, non compensatable DJ, applied sinusoidal (SJ) and Gaussian (RJ). Each of these is added to the serial signal generated by a pattern generator. A sine-wave generator modulates the clock to the pattern generator to provide sinusoidal jitter modulation over the required frequency range. A fibre or cable adds compensatable DDJ. The length of the fibre or cable is adjusted to produce the require level of compensatable DDJ. Practically, it is easier to control the

Copyright International Organization for Standardization
Provided by IHS under license with ISO
No reproduction or networking permitted without license from IHS Not for Resale

compensatable DDJ by using an electrical cable than by using a multimode fibre and single mode fibre is cumbersome because of the long length requried. Non compensatable DJ is added from a filtered PRBS7 signal generator. Adjustable random jitter is added to the signal to provide random jitter. A broadband power combiner circuit is used to add the SJ and RJ to the clock input to the pattern generator. The signal amplitude is controlled. The rise time may be accomplished via adjusting the Bessel-Thomson filter properties.

If using the clock input to the pattern generator is not suitable for any reason, then the output of the pattern generator may be phase / time modulated by the jitter sources (amplitude properties of the final signal need to be preserved in all cases).

RJ is added in this example with a wideband coupler and a sine clock source. This may be a good approach, but the following cautions apply.

a) To convert ampitude to jitter within reasonable constraints on linearity, the useful amount of jitter with this method is <0,3 UI peak-to-peak assuming all else is ideal. This meets the requirements.
b) Be sure, set-up and hold times are not being violated at the clock input of the pattern generator (the pattern generator may not operate with the required level of RJ on its clock input).
c) The pattern generator may filter the jitter excessively - adequate modulation bandwidth is required.

The division of DJ into compensatable and non compensatable is done because with only compensatable DDJ the vertical eye closure ratio is excessive and too harsh on receivers that don't equalize. Also, using only compensatable DDJ may not ensure that receivers that equalize are able to tolerate non compensatable forms of DJ.

By adding some form of DJ that cannot be equalized and that does not cause so much vertical closure the DDJ portion and vertical eye closure ratio can be reduced to about half of what would result from using compensatable DDJ alone.

Among the options for the additional uncompensatable DJ are more SJ, more DCD, some BUJ and others. The method documented uses a PRBS7 generator that is filtered to ~1/20th of the generator's rate applied to the phase modulation clock port. To keep costs low and performance reasonable the rate of this generator is fixed at 1 GBd. The filter is provided from a small fixed filter. This scheme provides an approximately flat jitter spectrum from the PRBS data rate up to the filter bandwidth and has a reasonable normal PDF (but bounded). Other combinations of pattern length, PRBS data rate and filter bandwidth may be possible as long as a broad spectrum and reasonable PDF are obtained.

Other general cautions are:

a) Instrument noise floors and data dependencies may lead to test signals with less stress than intended.
b) RJ must be Gaussian and not clipped out to >BER being tested. The rms value does not guarantee that the tails exist.
c) The spectrum of the portion of RJ that is calibrated must be from greater than 20 MHz. AC coupling below 20 MHz may be used. The pattern generator shown passes clock input jitter through to the data with >>20 MHz BW. This property should be verified. The RJ spectrum need not be white above 20 MHz, but a wider spectrum is preferred.
d) It may be required to add amplification to achieve the required test signal amplitude.

Copyright International Organization for Standardization
Provided by IHS under license with ISO
No reproduction or networking permitted without license from IHS Not for Resale

11.2.4.2 Optical jitter / signal tolerance source example

Figure 77 shows an example of how to generate an optical signal with controlled properties including jitter, amplitude and rise time to be used for a signal tolerance measurement.

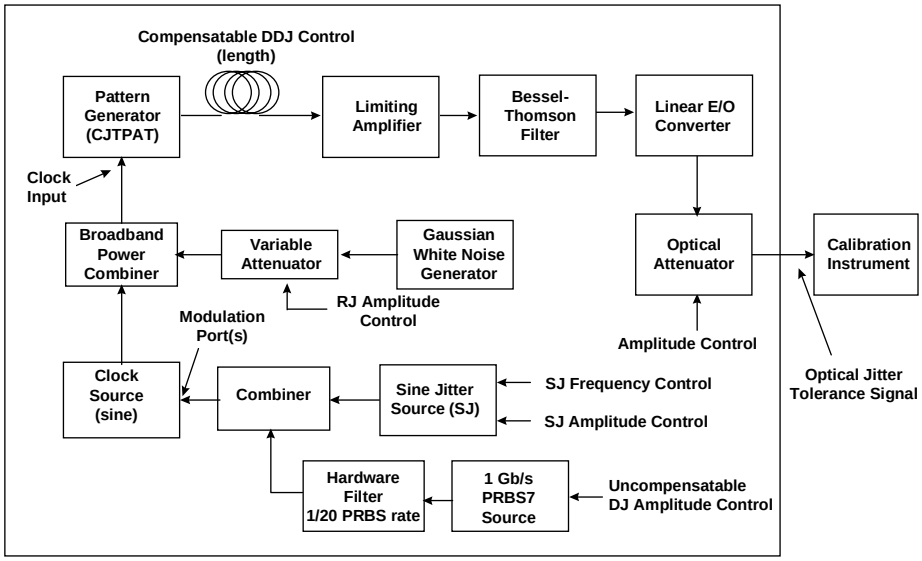

Notes for figure 77:

a) The calibration instrument includes an optical reference receiver (O/E conversion and 4th order Bessel Thomson filter with -3 dB frequency = 0,75 x baud. It should have high inherent sensitivity and linearity over the range of signal powers being calibrated.
b) The limiting amplifier is used to restore the amplitude and rise and fall times of the signal after the DDJ mechanism.
c) The Bessel-Thomson filter shown in the block diagram is for edge rate control. The combination of the limiting amplifier, the filter and the linear E/O converter shall produce rise/fall times that comply with the following:
d) greater than 0,25 UI when the effects of the bandwidth limiting of the calibration instrument are removed.
e) less than 0,43 UI when the effects of the bandwidth limiting of the calibration instrument are in place.
f) These rise/fall time requirements are 20 % to 80 % and shall be measured with a repeating fixed disparity K28.7 pattern and with all jitter sources turned off.
g) The optical test signal shall be symmetrical and have minimal RIN, distortion, overshoot and undershoot. It should be at the nominal wavelength for the variant under test, +/- 10 nm. The extinction ratio should be between 6 dB and 9 dB.

Figure 77 - Example of an optical signal tolerance source

Copyright International Organization for Standardization
Provided by IHS under license with ISO
No reproduction or networking permitted without license from IHS Not for Resale

11.2.4.3 Electrical jitter / signal tolerance source example

Figure 78 shows an example of a signal tolerance source for an electrical signal. The properties are similar to the optical signal source.

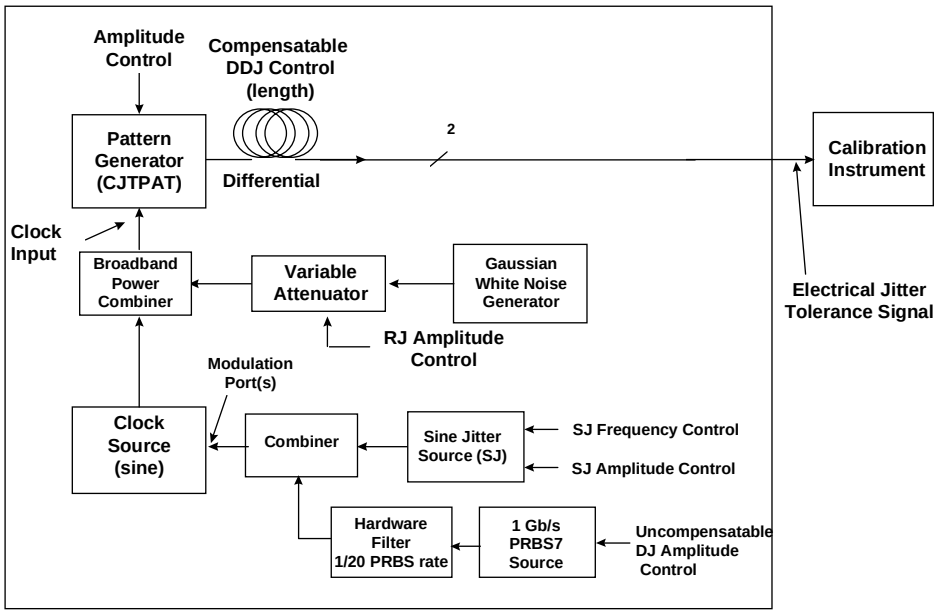

Figure 78 - Example of an electrical signal tolerance source

The calibration instrument presents an impedance equal to the reference impedance for the electrical variant under test. The effect of the DUT not having the reference impedance is part of the signal tolerance measurement. See [6.15].

For differential variants as shown in figure 78 the calibration of the tolerance signal is performed using a differential signal. If test equipment only has single channel, single ended input capabilities conversion of the differential signal is required and the accuracy of the conversion process shall be verified over the entire frequency band of interest.

11.2.5 Calibration of a jitter tolerance signal source

Any valid scheme may be used to generate a CDF for the signal at the threshold level. It is required that a Golden PLL be used. The process described in clause 8 is used to report the RJ and DJ values for the signal source under test.

The following process is used to calibrate a jitter tolerance signal source.

1) The signal is set to a nominal amplitude.
2) With the SJ source turned off the properties of the DJ and RJ sources are iterated until the desired DJ and TJ content results.
3) Add SJ until the TJ increases by the amount specified for SJ. SJ can only be measured at frequencies much greater than baud/1667 if the Golden PLL is being used. At lower frequencies, the amount of SJ given in the template can be calibrated without the Golden PLL (allowed only for this step), but the eye may be completely closed under these conditions. If the Golden PLL is used, then the amount of measured SJ should be equal to the value given above baud/1667 regardless of the SJ's frequency. (This assumes the Golden PLL has the correct frequency response).
4) The signal amplitude is then set to the minimum allowed for the signal. (This is the maximum signal amplitude that is allowed for the signal tolerance measurement. If the 10^{-12} level is not measurable for some reason then having visible population at the minimum allowed amplitude is a conservative measurement for signal tolerance). Accurate amplitude calibration at the 10^{-12} level

Copyright International Organization for Standardization
Provided by IHS under license with ISO
No reproduction or networking permitted without license from IHS Not for Resale

is not practical using a conventional ET scope due to the low probability of the peak-to-peak RJ effects. For better visibility for amplitude calibration, the RJ portion may be temporarily replaced with an equivalent amount of peak-to-peak SJ to bring TJ up to the same specified output jitter level. This allows the signal to meet the desired amplitude value.

If the instrumentation is unable to supply SJ over the required frequency range the uncompensatable jitter source may be increased to achieve the required high-frequency effect via uncompensatable DJ rather than using SJ. Using the uncompensatable DJ source creates a level 2 calibration. If compensatable DDJ were to be used as a substitute for high-frequency SJ a receiver may be able to equalize the compensatable but would not compensate the high frequency SJ. This condition would be less stressful to the receiver than intended by the test.

Since there are presently no specifications on the values of compensatable and uncompensatable DJ the calibration for DJ is described without distinction between these types. One may do a rough calibration for compensatable and uncompensatable DJ by turning off the uncompensatable DJ source and reducing the DJ target value by the amount of uncompensatable DJ desired. The compensatable DJ is then adjusted in such a way that the reduced DJ target is met. Keeping the compensatable DJ setting constant, the uncompensatable DJ source is then turned on and the signal is calibrated to the original DJ / TJ target as described.

This general scheme may also serve as the initial target for determining a jitter tolerance compliance mask for a specific type of receiver.

11.2.6 Direct time synthesis

Direct time synthesis is a method of generating phase changes on serial bit sequences through digital delay calculations rather than analog modulation. In essence, it operates in the time domain rather than frequency domain. Due to this technique, direct time synthesis, has a high degree of flexibility in generating jitter. The test setup and test technique of a representative system is as shown in figure 79. DTS may be able to generate RJ and some forms of BUJ, both within frequency/bandwidth limitations of the DTS instrument.

Using direct time synthesis, the sinusoidal modulation technique may be replicated without separate pattern generator, clock source and frequency synthesizer. Additionally, direct time synthesis may generate eye closure.

DTS may be able to generate RJ and some forms of BUJ, both within frequency/bandwidth limitations of the DTS instrument.

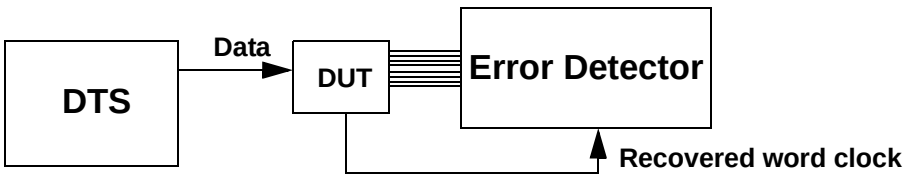

Figure 79 - Direct time synthesis jitter tolerance test setup for a 10 bit deserializer

11.2.7 BER measurements

If the link receiver is in a functional FC Port that has a special test mode that is capable of accepting the pattern generator output as valid data then one only need read the BER as reported by the Port. If the HBA is not capable of accepting the pattern generator data because port initialization (attaining word sync, dealing with fill words and other protocol requirements) protocol is not present in the pattern generator output

--`,,```,,,,````-`-`,,`,,`,`,,`---
Copyright International Organization for Standardization
Provided by IHS under license with ISO
No reproduction or networking permitted without license from IHS
Not for Resale

then the Port will not operate. In this case one must activate the Port using a valid FC port as a partner to the Port containing the link receiver under test in a manner similar to that shown in figure 84 for optical links. This requirement places significant additional requirements on the pattern generator that are not defined in the example used in 14.4 . See also Annex A.

It is also required that suitable software exist in the FC Port under test to report the errors created by the signal tolerance test. Bit errors may or may not be available in their native form in a functioning FC Port. Errors like CRC, code violations, etc., are more commonly those available. MJSQ does not define how to convert typical port errors to equivalent BER. This topic is expected to be addressed in MJSQ-2.

12 Example use of jitter specification methodology for FC-PI-n

12.1 Overview

Jitter allocation, or equivalently jitter budgets, are required to specify the performance requirements for a complete link. Each interoperability point in the link has its own set of requirements. In some cases one needs an active circuit between the interoperability points to achieve the required signal performance. The process of determining the actual budget numbers is complex and is not explored in MJSQ. Effective execution of an actual budgeting exercise for a specific variant requires understanding the methodologies described in this document for measuring and quantifying DJ and TJ as a starting point.

This clause shows some examples of how a finished jitter budget might appear. The numbers used for the examples were extracted from the latest revision of FC-PI-2 for 4 GFC. The process used to arrive at the values shown was executed as part of the development of FC-PI-2 and is not described in MJSQ. The numbers may change for this application in the future. This clause is not a jitter specification for FC-PI-2 variants.

Clause 12 only considers the jitter content at the average signal level and assumes that it is required to separately specify the DJ and TJ in the application.

The jitter content of a signal may depend on the signal amplitude, signal rise/fall times, data pattern and possibly other properties as described in [12.2]. This dependence may not be linear.

Measurement of the jitter content in the signal requires specified measurement conditions. Often using a nearly ideal link termination during the signal measurement is required for jitter output measurements. For some interoperability points the signal is measured after the signal passes through special loads. These special loads may emulate, for example, an ISI intensive electrical interconnect or a receiver that uses internal compensation (such as equalization). These special loads that simulate the relevant conditions in the link at the interoperability point of interest are required to make the benefits of the compensation schemes used in transmitter devices or receiver devices available to the link signal budget (including jitter). Otherwise, the signals as they exist prior to compensation have to be used as the basis for compliance and the compensation only appears as increased signal margin that is not visible when the signals are measured. Clause 12 assumes that the measurement conditions specified by the relevant standard (including any special loads) are in place when the signal is measured for compliance to the jitter budget.

12.2 Dependence on signal properties other than jitter output at the average signal level

If the jitter output at an interoperability point depends on the compliant data pattern, compliant signal amplitude, compliant rise/fall time or other compliant properties of the signal then the combination of these compliant properties that produces the highest jitter output is used for determining the jitter budget at that interoperability point. This worst case combination is determined on a case-by-case basis for every interoperability point in the link. In some cases it may be the shortest link that produces a return loss induced signal reflection jitter limited condition and the highest allowed signal amplitude with the shortest rise/fall time may be the worst case. In other cases it may be the longest link where ISI mechanisms and insertion losses are the limiting factors and the lowest allowed signal amplitude may be worst case.

--`,,```,,,,````-`-`,,`,,`,`,,`---

Copyright International Organization for Standardization
Provided by IHS under license with ISO
No reproduction or networking permitted without license from IHS Not for Resale

For jitter tolerance measurements the combination of compliant properties in the signal that produces the highest BER in the link receiver is used for determining the jitter tolerance budget. This is often the lowest allowed signal amplitude, the slowest rise/fall time and the CJTPAT in the applied signal at the interoperability point of interest. This is because link receiver may tolerate more jitter if the signal amplitude is higher or signal rise/fall time is shorter. The jitter tolerance requirements include specified amounts of applied SJ as described in clause 11.

In general, the signal conditions that produce the worst case jitter output are not the same as the signal conditions that produce the worst case jitter tolerance and each should be considered separately.

12.3 Jitter output budget and jitter tolerance budget

12.3.1 Overview

All interoperability specifications, including jitter budgets, apply through the mated connectors used for the interoperability point of interest.

Two jitter budget tables are needed for every interoperability point: one for jitter output from the upstream portion of the link and the other for jitter tolerance for the downstream portion of the link.

In current standards for the same interoperability point it is common for the jitter tolerance specifications to be the same as the jitter output specifications except that a certain amount of additional applied SJ is used for the tolerance specification (according to a jitter tolerance mask - see figure 3 and table 7).

This practice does not explicitly recognize that there may be different conditions in the signal that produce the worst case performance for the jitter output and for the jitter tolerance at the same point. The way the jitter tolerance is commonly specified invites one to think that the same signal conditions are used for the jitter output measurements and for the signal tolerance conditions. The discussion in [12.2] suggests that different signal conditions are required for jitter tolerance and jitter output for an effective specification. Having different signal conditions does not necessarily change the specifications for the jitter output and jitter tolerance but it may significantly change the way that these specifications are enforced. This is a topic that will be explored further in MJSQ-2 but the examples in this clause retain the current practice of official silence on the details of the signal conditions other than the jitter content.

12.3.2 Example jitter output budget tables

Table 8 contains an example of a set of jitter output specifications for the interoperability points for electrical variants in 4GFC. The values in the jitter output allocation table assume that ISI equalization may exist in the transmitter or as part of the interconnect between the γ_T and γ_R points.

.

12.3.3 Jitter tolerance specification

Jitter tolerance is specified at interoperability points. A signal that meets the limits for the jitter tolerance specification that is applied at the interoperability point shall not produce more than the allowed BER in the link receiver. The tolerance measured is for all the portions of the link that are downstream from the interoperability point.

Table 9 contains an example of a set of jitter tolerance specifications for the interoperability points for electrical variants in 4GFC.

The system or device design may inject noise into the downstream portion of the link through paths other than the serial data path under test that degrades jitter tolerance of the component. For this reason, it is recommended that jitter tolerance be verified in a system or device. An additional 0,10 UI is allowed between the jitter output and the jitter tolerance due to unspecified (environmental/system noise) components not present under a component test. This additional margin is also useful to accommodate interactions between different components on either side of the interoperability point caused for example by resonant noise generated via mismatched (but still in spec) impedances.

Copyright International Organization for Standardization
Provided by IHS under license with ISO
No reproduction or networking permitted without license from IHS Not for Resale

Table 8 - 4,25 GBd jitter output budget example

Interoperability point	α_T	β_T	δ_T	γ_T	γ_R	δ_R	β_R	α_R
400-SE-EL-S and 400-DF-EL-S Inter-enclosure, max (NOTE 1)								
Deterministic (UI peak-to-peak)	NOTE 3		0,14	NOTE 4	0,37	0,9		NOTE 3
Total (UI peak-to-peak) (NOTE 2)	NOTE 3		0,26	NOTE 4	0,57 NOTE 5	0,59		NOTE 3
400-SE-El-S and 400-DF-EL-S Intra-enclosure, max (Note 1)								
Deterministic (UI p-p)	Note 3	0,33 NOTE 6					0,33	NOTE 3
Total (UI p-p) (NOTE 2)	Note 3	0,52 NOTE 6					0,52 NOTE 7	NOTE 3

NOTE 1 Total jitter is the sum of deterministic jitter and random jitter. If the actual deterministic jitter is less than the maximum specified, then the random jitter may increase as long as the total jitter does not exceed the specified maximum total jitter.

NOTE 2 Total jitter is specified at a probability of 10^{-12}.

NOTE 3 α points are determined by the application.

NOTE 4 Shall meet Gamma jitter specification (a) measured through the Gamma T compliance interconnect and (b) measured through a zero length interconnect.

NOTE 5 Pre-compensation at the transmitter may be used to cancel DDJ at Gamma R, however, the remaining total jitter budget cannot be assigned entirely to RJ. In order to allow compensation in the receiver the opportunity to compensate ISI induced DDJ, broadband non-DDJ components of TJ should not exceed 0,39 UI

NOTE 6 Shall meet Beta jitter specification (a) measured through the Beta T compliance interconnect and (b) measured through a zero length interconnect.

NOTE 7 Pre-compensation at the transmitter may be used to cancel DDJ at Beta R, however, the remaining total jitter budget cannot be assigned entirely to RJ. In order to allow compensation in the receiver the opportunity to compensate ISI, broadband non-DDJ components of TJ should not exceed 0,33 UI.

NOTE 8 α , β , δ , γ are defined in figure 9.

13 Practical measurements

13.1 Level 1 and level 2 measurements

Two broad levels of MJSQ measurement are defined:

Level 1 measurement (test) definition

Level 1 measurements are tests that are needed to ensure that the signal meets the specified requirements. Level 1 measurements are intended for use with pass-fail criteria for compliance purposes.

Level 2 measurement definition

Level 2 measurement are not used for determining compliance to performance requirements. Level 2 measurements produce quantitative results that may reveal the source causes of degradations measured in level 1 measurements but level 2 measurements do not have pass-fail criteria assigned. Level 2 measurements are expected to be useful for designing and manufacturing sys-

Copyright International Organization for Standardization
Provided by IHS under license with ISO
No reproduction or networking permitted without license from IHS Not for Resale

Table 9 - 4,25 GBd jitter tolerance budget example

Interoperability point	α_T	β_T	δ_T	γ_T	γ_R	δ_R	β_R	α_R
400-SE-EL-S and 400-DF-EL-S Inter-enclosure, minimum NOTE 1								
Sinusoidal swept frequency (SJ) 2,55 MHz to > 21,25 MHz NOTE 4	NOTE 5		0,10	NOTE 7	0,10	0,10		NOTE 5
Deterministic (DJ)	NOTE 5		0,14	NOTE 7	0,37	0,39		NOTE 5
Total (NOTE 2, NOTE 3)	NOTE 5		0,36	NOTE 7	0,67	0,69		NOTE 5
400-SE-EL-S and 400-DF-EL-S Intra-enclosure, minimum NOTE 1								
Sinusoidal swept frequency (SJ) 2,55 MHz to > 21,25 MHz NOTE 4	NOTE 5	NOTE 6					0,10	NOTE 5
Deterministic (DJ)	NOTE 5	NOTE 6					0,33	NOTE 5
Total (NOTE 2, NOTE 3)	NOTE 5	NOTE 6					0,62	NOTE 5

NOTE 1 The jitter values given are normative for a combination of DJ, RJ and SJ that shall be tolerated at the interoperability point without exceeding a BER of 10^{-12} .

NOTE 2 No value is given for random jitter (RJ). For compliance with this spec, the random jitter amplitude shall be the value that brings total jitter to the stated value at a probability of 10^{-12} .

NOTE 3 The link downstream from the interoperability point shall tolerate sinusoidal jitter of progressively greater amplitude at lower frequencies, according to the applicable jitter tolerance mask, combined with the same DJ and RJ levels as were used in the high-frequency sweep.

NOTE 4 The sinusoidal component is calibrated as defined in [11.2.5].

NOTE 5 Values at the α points are determined by the application.

NOTE 6 Shall meet β_R jitter specification numbers when measured through the β_T compliance interconnect.

NOTE 7 Shall meet γ_R jitter specification numbers when measured through the γ_T compliance interconnect.

tems and components that produce signals that satisfy level 1 test requirements. Level 2 measurements are not individually required as direct performance measures of the signal.

Level 2 measurements may be required to set up level 1 measurements. For example, setting up a signal to be used for a tolerance measurement uses level 2 processes to set up the signal and a level 1 process to measure the tolerance.

13.2 System considerations

Annex A explores the details of getting access to a system for measurement purposes. MJSQ recognizes that practical access to an operating system is almost always problematic. Even if the system may be made available for testing, there are both good and bad points about making measurements in an operating system.

On the good side, the noise environment is real in an operating system. It is difficult to emulate system noise in a component measurement. Another good point is that the actual lengths and terminations to be used are in place. This fixes the reflections and resonances as they exist in this particular application. This benefit may be illusory, however. The mere act of probing an operating system may result in significant changes and potentially unexpected results, both positive and negative.

Unfortunately, almost nothing in a real system is worst case and once the specific collection of hardware is assembled it may be difficult to determine whether the individual components comply with the signal

Copyright International Organization for Standardization
Provided by IHS under license with ISO
No reproduction or networking permitted without license from IHS Not for Resale

requirements. For example, if the transmitter launches higher than the minimum signal amplitude, then an interconnect with more loss than allowed could still allow the link to work. If that transmitter is replaced with another that barely meets the specifications for a transmitter then the system will not work (unless the receiver is also better than required). At this point many people consider it an academic question as to whether the non compliant interconnect is the fault or the new transmitter is the fault. Most people would immediately jump to the conclusion that the transmitter is the fault because, after all, the system was working fine before the transmitter was replaced.

It is hard for some people to accept that a measurement in an operating system is not the ultimate measurement environment. Yet the issues of noise, resonance, reflections, crosstalk and radiation are all largely a result of the specific system implementation details. These details are not transportable to other system implementations. This, and the lack of control over the analog stimulus properties, render system environments suboptimal for verifying that specific link components are compliant.

A goal of having signal specifications is to enable interchangeable components that together produce an operating link in a system. This requires that any collection of compliant components when assembled into a link in a system will work with acceptable bit error ratios. Therefore, specifications for components need to assume worst case inputs and minimal outputs. And the component specifications need to be independent of specific system implementations while at the same time including all the system effects mentioned above. Even though having both inclusion of system effects and independence from specific system effects is mathematically exclusive at the same time, some attempts to include system effects in component measurements have been made as stated in [13.3].

Measurements in a system environment reflect only the behavior of that specific system and the results should not be assumed to apply to other systems.

13.3 Component considerations

Some progress has been made towards having component specifications anticipate the system environment. However, the industry has not yet broadly adopted even these. This subclause lists some examples of component considerations as related to system implementations.

In a duplex link interconnect SFF-8410 [23] and FC-PI-n [1] require that the link not under test be active while the link under test is being measured. That ensures that some of the first order crosstalk effects are included in the measurement.

SFF-8415 [24] requires that eye measurements on interconnect assemblies be valid at data rates 10 % above and 10 % below the nominal data rate as well as at the nominal data rate. This ensures that there are no important suckouts near the data rate. This requirement also provides some protection against the actual link length between the transmitter and receiver being different from the cable assembly length because of board traces between the cable assembly and the link termination in the system.

FC-PI-n requires that components be measured with nearly ideal link termination attached on both ends (if there are two ends and on the downstream side for transmitters and on the upstream side for receivers). This allows the link component specification to exist independent of the actual components attached to the component under test in the system implementation. It also forces the impact of the attached components not having ideal termination onto the attached components. While that may seen unfair at first sight, consider that the attached components not having nearly ideal termination are the cause of the impact. Pressure to eliminate the negative effects caused by non ideal termination needs to be on the component that has the ability to make it better.

There is an interoperability penalty in the signal specifications caused by differences in the signal output and signal tolerance at the same interoperability point. These differences arise because components on both sides of the interoperability point each are allowed independent tolerances for properties. For example, in a simple d.c. system with two compliant components, if the downstream component has a lower than nominal impedance and the upstream component has a higher than nominal impedance the signal at the interface is reduced by both the upstream and downstream components. If the signal output specification is measured with nominal impedance for the signal load the effect of the high impedance on the

--`,,```,,,,````-`-`,,`,,`,`,,`---

Copyright International Organization for Standardization
Provided by IHS under license with ISO
No reproduction or networking permitted without license from IHS Not for Resale

upstream component is included in the measurement. However, the signal will still not meet the minimum amplitude requirement when a compliant, but not nominal, low impedance downstream component is used in service. The output signal specification is increased to accommodate the worst case possible from compliant components. This increase is effectively an interoperability penalty that would not exist if nominal components were used. MJSQ does not specify the methodology for determining the interoperability penalty values but this is planned as a topic for MJSQ-2. Extensive use of sophisticated simulations are required for high-speed links.

When the components under test are an integral part of a PCB assembly FC-PI-n [1] requires that the PCB be active during the signal measurements.

13.4 Instrumentation considerations

13.4.1 General

Instrumentation is the collection of hardware and software that produces a measurement result. Data processing may occur prior to presenting the result. Among the properties of the instrumentation that are important to MJSQ are speed of data acquisition, digital representation of results, jitter introduced by the instruments, impedance levels supported, fidelity of termination within the instrument at its connectors, sensitivity to details of connector attachment (torque etc.), temperature sensitivity, filtering available and granularity levels supported. A major distinction is made between instrumentation that supports FC compliant or non-FC compliant data patterns. See also Annex A.

13.4.2 FC compliant

Data patterns contained within FC frames or as non-frame primitives are FC compliant. Operating FC links require FC compliant data structures. Examples of FC compliant data patterns are given in Annex A.

13.4.3 Non-FC compliant

Data patterns generated from non-FC test instruments or from FC ports not operating as part of a functional link that do not satisfy the protocol requirements for frames, word synchronization, idle primitives and the like are non-FC compliant. Examples of non-FC compliant data patterns are given in Annex A.

13.5 Reference standards / calibration considerations

One primary consideration comes from the properties of the launched signals used in the measurements. Since the properties of the signals at the receiver are the only properties that matter to a configured and operating system, it is critical that the measurements use launched signals into the interconnect that are the worst allowed. If launched signals used during the test are degraded more than that allowed then the interconnect will be called on to cause less degradation so that the result at the receiver will still be within specification. The use of excessively degraded launched signals places unfair burden on the interconnect.

Conversely, if the launched signals are better than allowed, the interconnect may cause more degradation than allowed for the interconnect but still deliver compliant signals to the receiver. This condition permits defective interconnect to be measured as good interconnect. The way to avoid these risks is to execute an adequate characterization of the launched signals and to compensate in the test requirements for the amount of excess goodness or badness in the launched signals. Figure 80 illustrates this general scheme.

Copyright International Organization for Standardization
Provided by IHS under license with ISO
No reproduction or networking permitted without license from IHS Not for Resale

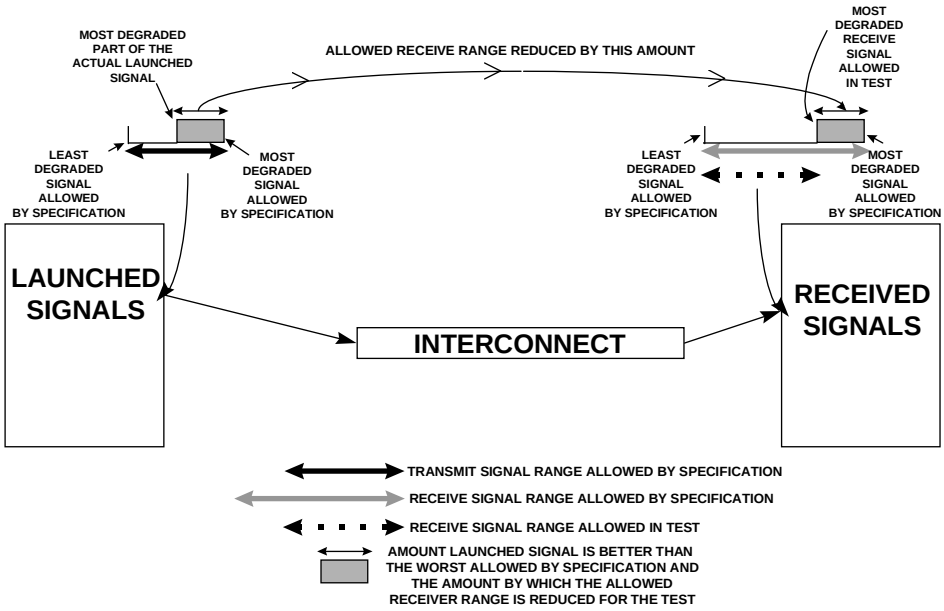

Figure 80 - General allowed range calibration strategy

13.6 Test fixture compensation and calibration issues

13.6.1 Overview

The test fixtures and adapters described in Annex A are assumed to be largely ideal in their ability to deliver the designed transformations. Real test fixtures may have special properties that present a primary risk to the integrity of MJSQ measurements due to unknown or unexpected effects on the signal by the test fixture. Subclause [13.6] explores some of these effects and responses.

13.6.2 Compensating and non-compensating test fixtures

In some cases the launched signal may be unintentionally improved if the test fixture compensates for the component under test by introducing degradation of the parameter in the opposite sense from that introduced by the component under test. This type of degradation is termed compensating degradation. If compensating degradation is present, it gives a false sense of goodness in the component under test. When the same component under test is used with launched signals from other test fixtures and transmitters having non-compensating degradation the resulting component performance may be seen to be much worse.

Characterizing test fixtures via S parameter methods is recommended to minimize the occurence of compensating degradation. Compensating test fixtures above the intrinsic measurement error are not acceptable.

13.6.3 Detection and correction of test fixture degradation effects

In the copper case compensating degradations are easy to detect and correct by simply reversing the connection sense and re-measuring as specified in SFF-8410 [23]. The sense reversal may be required in the test fixture due to connector keying and other practical issues. Granted, a small part of the degradation could be caused by different amounts of misalignment of the copper contacts with resulting slight changes in balance and contact resistance. But in the copper case there is generally only a single direction of misalignment possible. In the optical case there is a continuum of “directions” for the compensating degradation that may exist and that results in a more complicated detection and removal scheme. These schemes should be described as part of the testing procedures.

Copyright International Organization for Standardization
Provided by IHS under license with ISO
No reproduction or networking permitted without license from IHS Not for Resale

In the optical case the basic approach described in SFF-8412 [25] and available for use in this document is to define and use “golden” hardware for the test fixture side and to develop empirical and theoretical extrapolations to the worst case for application use. The failure limits during the test with the golden hardware are significantly more stringent than for the performance expected with worst case hardware.

13.6.4 Correction for golden test fixture effects

Figure 81 shows that in addition to the properties of the optical source being better than allowed, the degradation caused by the test fixture being less than allowed also needs to be subtracted from the allowed receive signals.

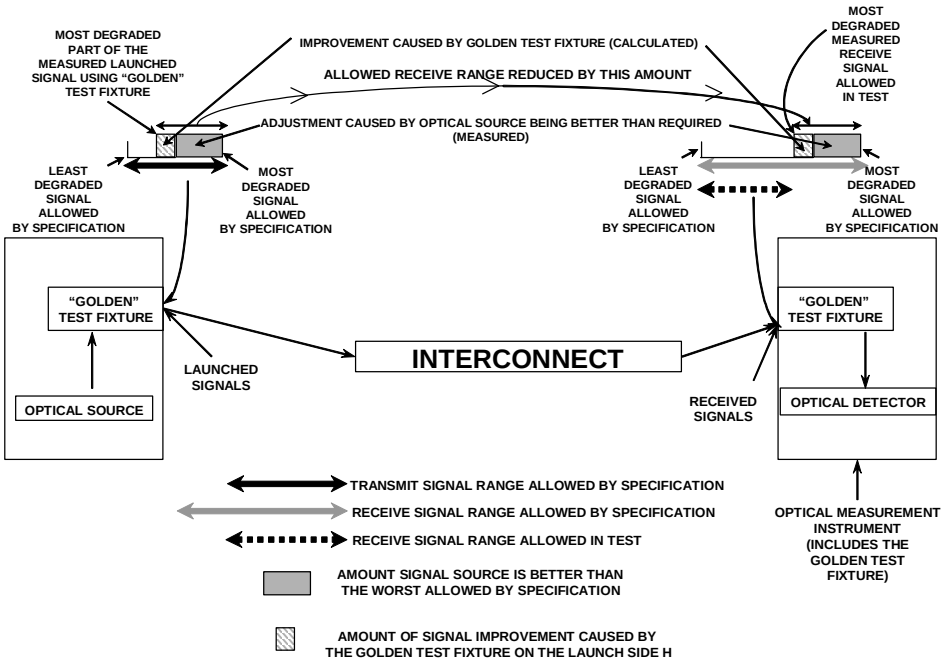

Figure 81 - Compensating degradation calibration strategy

13.6.5 Connector type adapters

When dealing with real systems one is faced with a variety of connectors that are incompatible with each other. This condition invites the use of adapter connectors that allow sources and instruments to be used with a variety of connectors. If adapter connectors are used, they introduce additional interfaces each capable of introducing compensating or non-compensating degradation that needs to be accounted for.

For this reason it is desirable to design the test fixtures using the same type of connector used on the interconnect under test. If adapters are used then the connector that connects directly to the component under test becomes the new starting point for the test fixture. This connector needs to be a golden connector for optical applications since it is part of the test fixture.

Figure 82 illustrates the use of an adapter as part of an optical test fixture used for measuring a fibre under test or FUT.

Connector type adapters may be the only practical approach for inputs to scopes and other expensive equipment. In this case, the adapters used shall be “calibrated” adapters (traditionally provided by the instrumentation manufacturer) that are considered part of the instrumentation.

Copyright International Organization for Standardization
Provided by IHS under license with ISO
No reproduction or networking permitted without license from IHS
Not for Resale

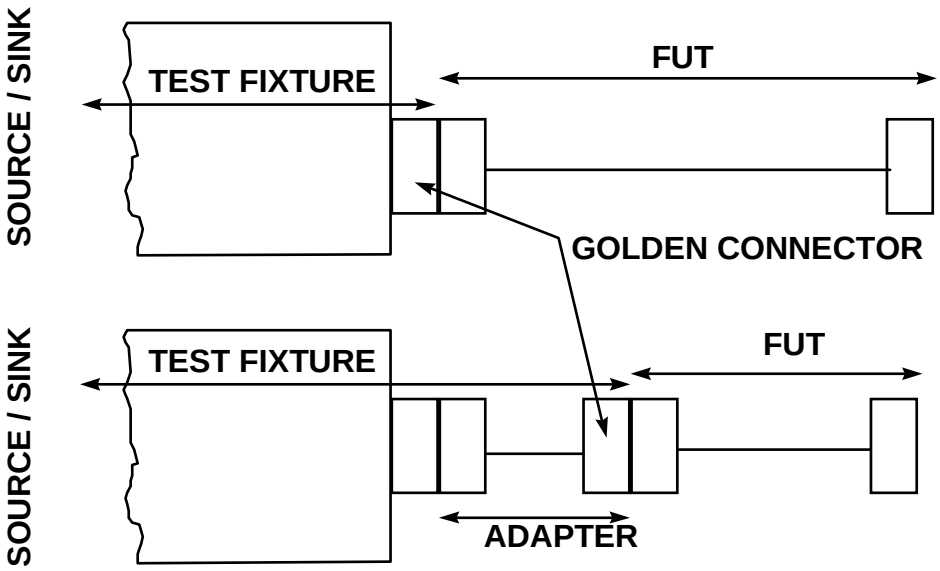

Figure 82 - Use of passive adapters as part of the optical test fixture

13.7 Data output format considerations

Results from MJSQ measurements may be presented graphically or numerically. Numerical results should use the same units for the same measurement types to enable easy comparison with results from independent measurements. Graphical results should use the same scales on the axes even if the detail is not as clear for some samples on the common scale. High magnification scales, auto scales and inconsistent scale units all serve to make comparisons difficult. Specialized scales may be used in addition to common scales but the common scale should always be presented as the primary data presentation method.

This document suggests the units and scales that may be used as common for the measurement types that are documented in detail. See, for example, clause 14 and figure 87.

Copyright International Organization for Standardization
Provided by IHS under license with ISO
No reproduction or networking permitted without license from IHS Not for Resale

14 Detailed implementation examples

14.1 TIA for optical gamma T at switching threshold for FC Ports

14.1.1 Overview of measurement and strategy

This clause describes optical Gamma T test for FC Ports as a level 1 test (i.e., a required performance measurement that has pass-fail limits specified) based on Timing Interval Analysis (TIA). Basic TIA measurements are described in 10.5. Assumptions for the Gamma T measurement described in this subclause are the following.

a) The measurement is applicable to any FC Port (i.e., may need initialization, compliant traffic).

b) The crosstalk in the Port under test is not a function of the input optical amplitude on the receiver side of the Port (i.e. limiting amplifiers are assumed in the receiver circuitry).

c) There is no separate timing reference signal available from the Port.

The Port under test is connected to at least one other FC Port that provides all the protocol support needed to make the FC Port under test fully active.

This test is described with the timing events occurring at the nominal switching threshold level only. Signal behavior at other levels may use some of the methodologies described in this clause but the timing reference shall follow the requirements specified in 6.8.

There are three measurement options defined for executing this test:

1) TIA no clock, no marker (example of preparing for statistical bin analysis in table 5);
2) TIA with Golden PLL bit clock (example of building a PDF form in table 5);
3) TIA with pattern marker (armed-on-bit-sequence) (example of preparing for sequential time analysis in table 5).

Each option uses the basic TIA methodology but with different schemes for acquiring the data.

In the clockless - markerless TIA option every signal transition in the data stream is available and all the timing behavior present in the signal is reflected in the raw data resulting from the measurement. Elimination of low-frequency content is done by post processing the raw data. See 10.5.4.2.

In the TIA with a Golden PLL option the low-frequency content that would be tracked by the receiver is eliminated from the data stream by the Golden PLL before being presented to the TIA. This removes the need for post processing but introduces the need for the Golden PLL.

In the pattern marker TIA option data is acquired only after a specific bit sequence is detected. This allows examination of specific parts of a data stream (such as within frames or between frames) for a focused measurement. This option reveals all the timing behavior for the part of the bit stream examined. This method enables examination of the test data pattern only (i.e. the data pattern required for compliance testing).

This option also enables significant diagnostic (level 2) information concerning the data transition density, the relation of the DJ timing to specific bits and the power spectral density of all the uncorrelated jitter components: unbounded (= Gaussian, = RJ) and BUJ.

These measurements assume that the FC Port is good enough to complete the normal initialization sequence either with itself through a retiming hub or to another FC Port and that the initialization sequence has completed.

The other Port shall not inhibit the Port under test from transmitting a continuous stream of output.

Copyright International Organization for Standardization
Provided by IHS under license with ISO
No reproduction or networking permitted without license from IHS Not for Resale

The payload in the frames shall be capable of carrying the following patterns defined in Annex A:

CJTPAT, CSPAT, CRPAT. In addition, continuous idles shall be used. The reported jitter number shall be the worst of the above.

This scheme requires detecting the optical signal coming through the mated optical connector on the external side of the optical connector as shown in Figure 83. The mating connector used for this test is part of the interconnect that accesses the optical measuring equipment. It is assumed that this connector on the interconnect cable is representative of the connectors that would be used in service.

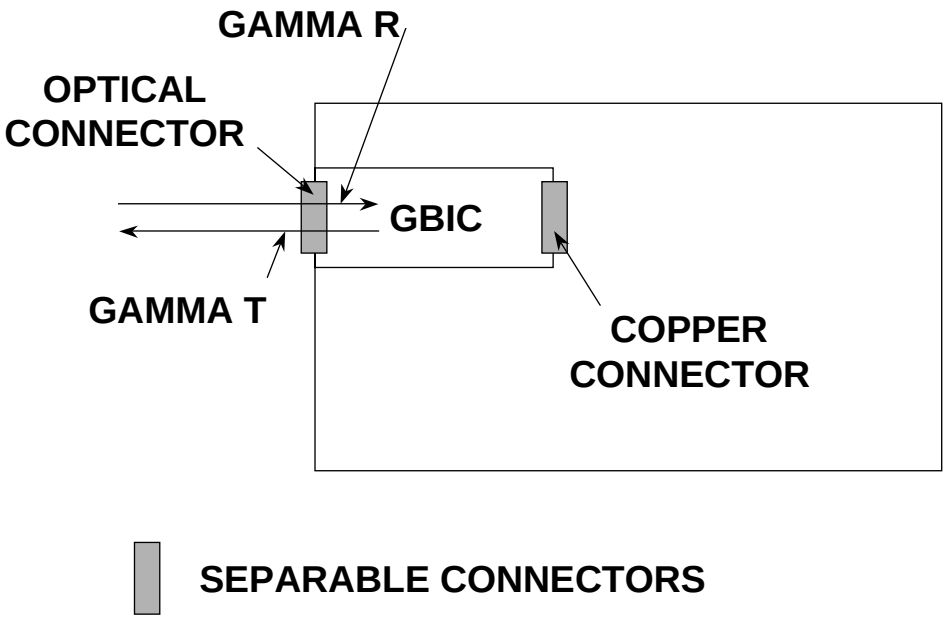

Figure 83 - Physical location of Gamma points (in a GBIC example)

14.1.2 Test fixtures and measurement equipment

The basic test configuration for all optical Gamma T measurements is shown in Figure 84. It requires an optical to electrical conversion somewhere in the measurement equipment. The optical to electrical conversion may take place within the TIA instrument. In this case, the optical to electrical conversion hardware is considered part of the measurement equipment.

Copyright International Organization for Standardization
Provided by IHS under license with ISO
No reproduction or networking permitted without license from IHS Not for Resale

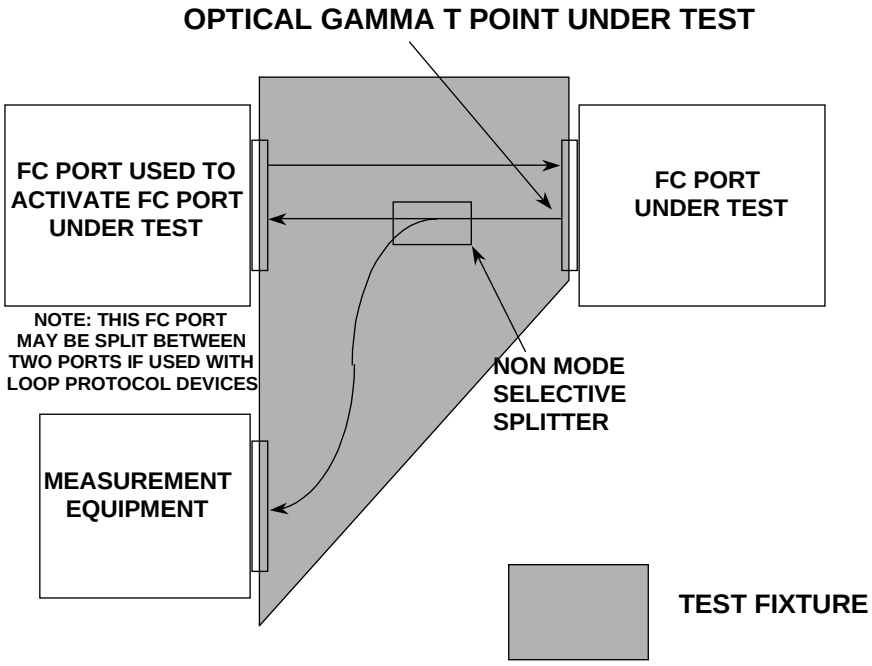

Figure 84 - Test fixture and basic test configuration

This configuration assumes that the FC port under test may only be activated by connection to another FC port. If the port under test may be activated through a special out of band test mode then the output may be connected directly to the measurement instrument. Note that the input signal to the FC Port under test is still required in this case to include the crosstalk effects from the receiver on the transmitter.

14.1.3 Option 1 - optical TIA no clock, no marker

14.1.3.1 Option 1 overview

TIA option 1 uses an instrument that incorporates all the required conversions and reference timing extractions. It captures all the timing content available at the nominal receiver detection threshold without filtering or preference to any specific part of the data stream.

14.1.3.2 Option 1 test fixture

The test fixture described in Figure 84 is used.

14.1.3.3 Option 1 measurement equipment

In this option no Golden PLL or bit sequencer equipment is required. The measurement equipment in Figure 84 is shown in detail in Figure 85.

--`,,```,,,,````-`-`,,`,,`,`,,`---

Copyright International Organization for Standardization
Provided by IHS under license with ISO
No reproduction or networking permitted without license from IHS Not for Resale

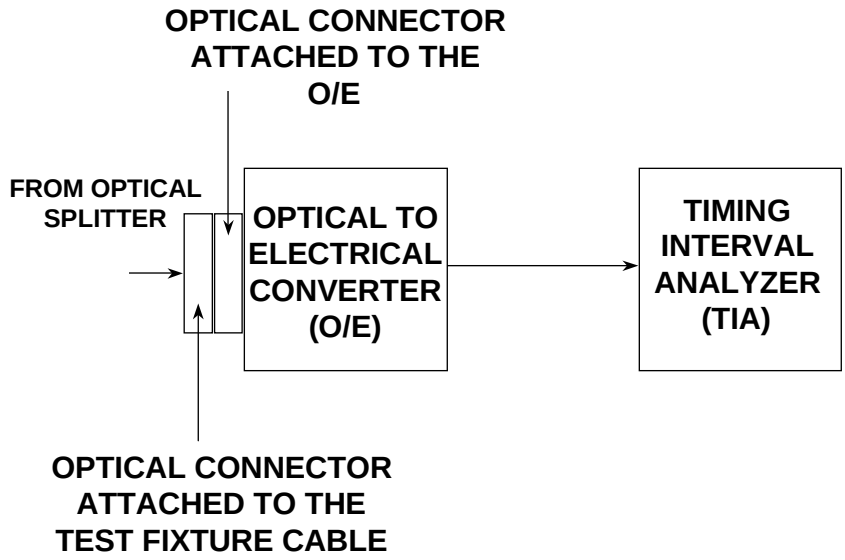

Figure 85 - Option 1 measurement equipment detail

The specifications listed below for option 1 measurements do not constitute the entire set that applies to the hardware described. Some equipment specifications for signals up to 3,2 GBd are listed below for reference. Refer to the manufacturer for the complete set of specifications.

Optical to electrical converter:		
Wavelength	800 to 1 650 nm	
Bandwidth	DC to 5 GHz	
Filter	4th order Bessel Thomson	
Optical Input Data Rate	up to 3,2 Gbit/s	
TIA:	**(or)**	
Frequency range	0,4 Hz to 1,63 GHz	0,4 Hz to 3 GHz
Maximum data rate	3,2 Gbit/s	4,5 Gbit/s
Hardware resolution	680 fs	200 fs
Jitter noise floor	< 3 ps	< 2 ps
Controlling application software:	Suitable for the TIA being used	
Revision	Adequate to meet the requirements of MJSQ	

GPIB cabling is installed from OE and TIA to PC installed with application software. If no PC is used cabling is installed between the OE and the TIA. The TIA may have built-in application control software.

Cabling between OE and TIA:

Cable typeStrip braid coaxial
Impedance50 Ω
Cut-off frequency2,0 GHz
Maximum attenuation24,9 db/100 ft at 3 GHz
ConnectorsSMA

Copyright International Organization for Standardization
Provided by IHS under license with ISO
No reproduction or networking permitted without license from IHS Not for Resale

14.1.3.4 Option 1 calibration

For details of the theory of calibration for the instruments required for this measurement refer to the manufacturers user manual.

The TIA specified in 14.1.2 is equipped with an internal calibration source for calibrating input channel circuitry. The internal calibration is necessary to calibrate internal timing circuits that provide the high resolution for time measurements. A 30 minute internal calibration is recommended.

An external calibration is also performed on the TIA to establish zero reference points to be used by subsequent measurements. The external calibration process calculates and compensates for delays from cable skew, including the circuitry all the way to the logic inside the TIA. In the case of Option 2, the external calibration is re-performed if cabling to the TIA is changed to maintain the correct clock to data time relationship.

Use the following steps to set up the calibration:

Ensure proper GPIB cabling exists between the OE and TIA (and PC if required).

TIA:
Allow the TIA to warm up for at least 30 min.

Perform an internal calibration per the TIA and application User's Manuals. It is recommended to perform calibration using a multiplier factor of 6 in the calibration dialogue box of the application software to obtain the suggested 30 minute calibration.

Perform an external calibration per the TIA User's Manuals.

OE:
Remove all cabling from input and output ports to facilitate dark current calibration.

Perform a daily dark current calibration via the application software per the OE and application software User's Manuals.

14.1.3.5 Option 1 measurement procedure

Set up the measurement configuration as shown in Figure 86.

Copyright International Organization for Standardization
Provided by IHS under license with ISO
No reproduction or networking permitted without license from IHS Not for Resale

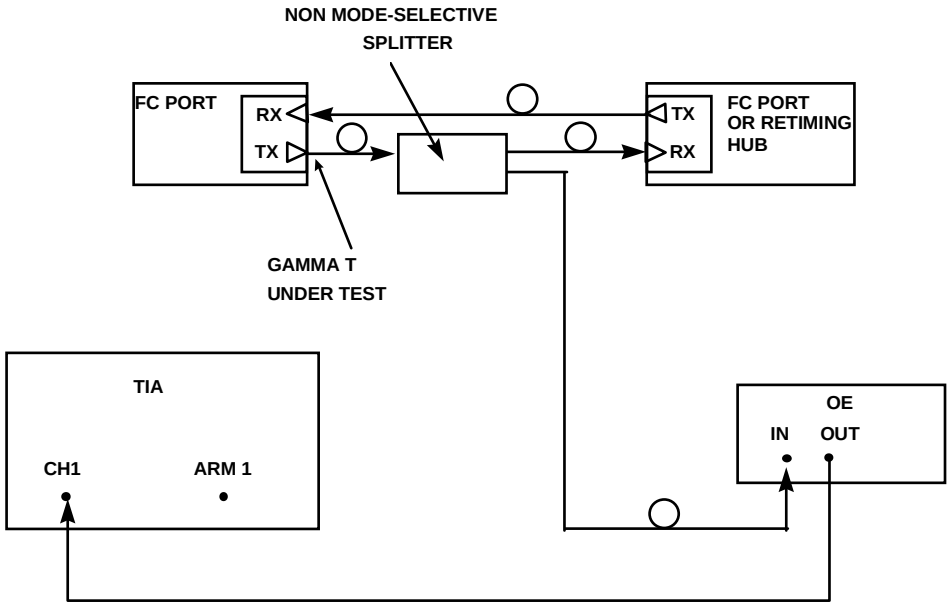

Figure 86 - Option 1 measurement setup

In the following, **bold underlined** text denotes buttons or menu items typically available in the application software.

Set up OE options appropriate for measurement being made using **Utilities** selection in the software main menu. Options include choosing whether or not to amplify the output coming from the fibre optic coupler and selecting from either 4th order Bessel-Thompson filters for 1X or 2X speeds or full bandwidth (no filter).

The TIA measurement set up is accomplished in the dataCOM tools of the application software by selecting **Random Data No-Marker**. Verify software options are appropriate for measurement. Under **Acquire Options**, verify that the high-pass filter corner frequency is set at 637 kHz for 1X Fibre Channel or 1274 kHz for 2X Fibre Channel and that **BER** is set for 10^{-12}. All other software options should be at default settings.

While under the **Random Data No-Marker** selection in dataCOM tools of the application software, select **Single Acquire** from the top toolbar to acquire DJ and TJ values for compliance testing.

14.1.3.6 Option 1 data output format

By selecting the appropriate **View**, a **Bathtub** Curve (CDF) may be obtained. Jitter values such as $DCD+DDJ_{pk-pk}$, RJ (1 sigma) and TJ may also be displayed on the plot corresponding to 10^{-12} BER as shown in Figure 87. **Effective Jitter** (as described in clause 8) was also enabled and plotted. The scales and number of displayed divisions are always as shown in Figure 87.

Copyright International Organization for Standardization
Provided by IHS under license with ISO
No reproduction or networking permitted without license from IHS
Not for Resale

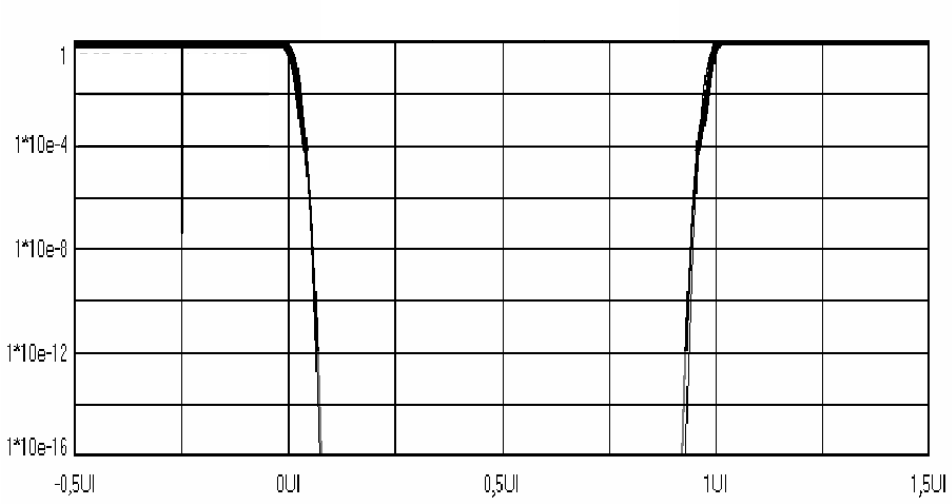

Figure 87 - Data output format for Option 1 measurement

The presentation in figure 87 is used as an output format example but the actual data pattern was repeating K28.5 and data was acquired only to the 1E-4 level. This level is adequate for this data pattern but would not be adequate for the CJTPAT that is required when measuring CDF's for level 1 purposes. The curves are asymptotic to the transition density (typically 0,5) although they appear to be asymptotic to 1,0 due to the scales used.

A summary screen may also be obtained with units expressed in UI, as shown in Figure 88. The measured DCD+DDJ peak-peak and RJ (1 sigma) values acquired with this method may be compared to the effective jitter values.

Random Data No-Marker Summary		
DCD+DDJpeak-to-peak	RJ(1sigma)	TJ
0,0567 09 UI	0,006 652 UI	0,136 903 UI
V1: -0,002 54 V		V2: -0,002 54 V
Effective DCD+DJpk-**pk**		Effective RJ(1sigma)
0,033 771 UI		0,007 132 UI

Figure 88 - Summary for Option 1 measurement

14.1.3.7 Option 1 acceptable values

The level 1 effective DJ and TJ using this method is compared against the maximum jitter specified in the applicable standard. Note that the calculation for the level 1 values of DJ and TJ as required in clause 8 is done internal to the instrument.

--`,,```,,,,````-`-`,,`,,`,`,,`---

Copyright International Organization for Standardization
Provided by IHS under license with ISO
No reproduction or networking permitted without license from IHS Not for Resale

14.1.4 Option 2 - TIA with Golden PLL bit clock

14.1.4.1 Option 2 overview

A Golden PLL is required to provide a reference clock derived from the data stream to arm the time interval analyzer for option 2. This scheme effectively removes low frequency content from the measured data in a manner similar to that done in a receiver. The configuration used for option 2 is shown in Figure 89.

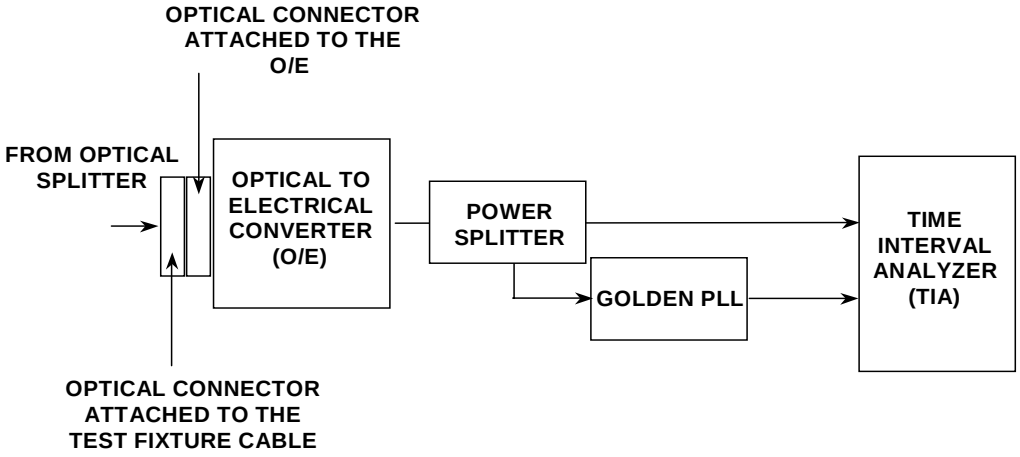

Figure 89 - Configuration for option 2 measurements

14.1.4.2 Option 2 test fixture

The test fixture shown in Figure 84 is used for the option 2 measurements.

14.1.4.3 Option 2 measurement equipment

The measurement equipment required for option 2 is identical to that specified for option 1 in 14.1.3.3 with the additional equipment listed below.

Electrical power divider (splitter):

ConnectorsSMA
Impedance50 Ω
Cut-off frequencyDC - 18 GHz

Golden PLL:meets the specifications in 6.10
Connectorsexpect SMA
Impedanceexpect 50 Ω

14.1.4.4 Option 2 calibration procedure

The calibration procedure for the TIA instrumentation used in option 2 is identical to that specified for option 1 in 14.1.3.4. Use the manufacturer's specifications for calibrating the electrical power divider and the Golden PLL.

14.1.4.5 Option 2 measurement procedure

The Option 2 measurement configuration is shown in Figure 90.

--`,,```,,,,````-`-`,,`,,`,`,,`---

Copyright International Organization for Standardization
Provided by IHS under license with ISO
No reproduction or networking permitted without license from IHS Not for Resale

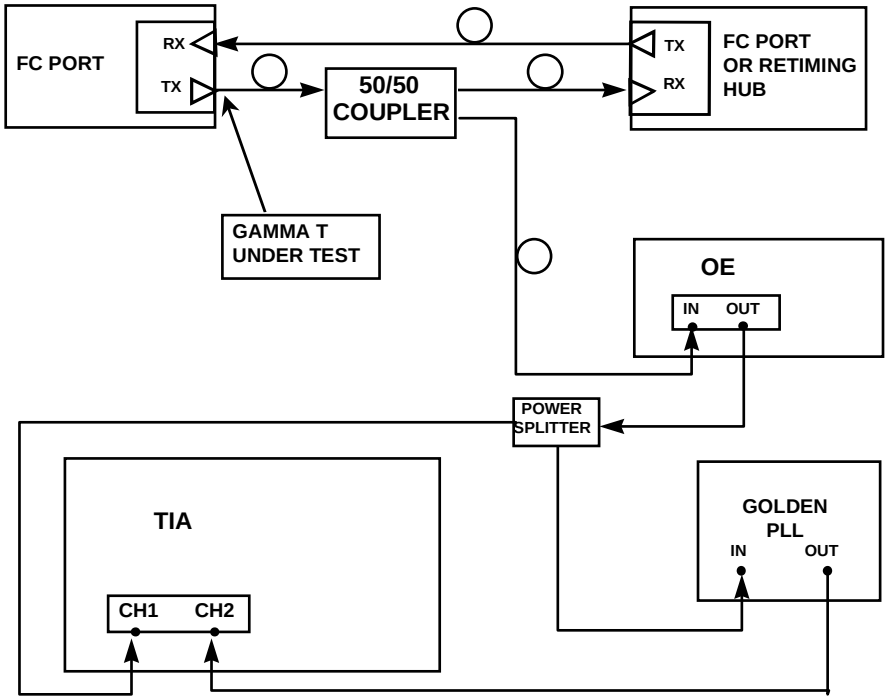

Figure 90 - Option 2 measurement setup

Set up OE options appropriate for measurement being made using **Utilities** selection in the software main menu. Options include choosing whether or not to amplify the output coming from the fibre optic coupler and selecting from either 4th order Bessel-Thompson filters for 1X or 2X speeds or full bandwidth (no filter).

Measurement set up is accomplished in the software by selecting **Random Data w/ Bit Clock**. Under **Tail-fit**, verify that **BER** is set at 10^{-12}. All other software options should be at default settings.

While under the **Random Data with Bit Clock** selection in the software, select **Run** from the top toolbar panel to acquire DJ and TJ values for compliance testing.

14.1.5 Option 2 data output format

By selecting the appropriate **View** from the software side menu, a **Histogram** of jitter data on rising and falling edges may be obtained, as shown in Figure 91. This is rendition 1 of option 2 data output format.

Copyright International Organization for Standardization
Provided by IHS under license with ISO
No reproduction or networking permitted without license from IHS Not for Resale

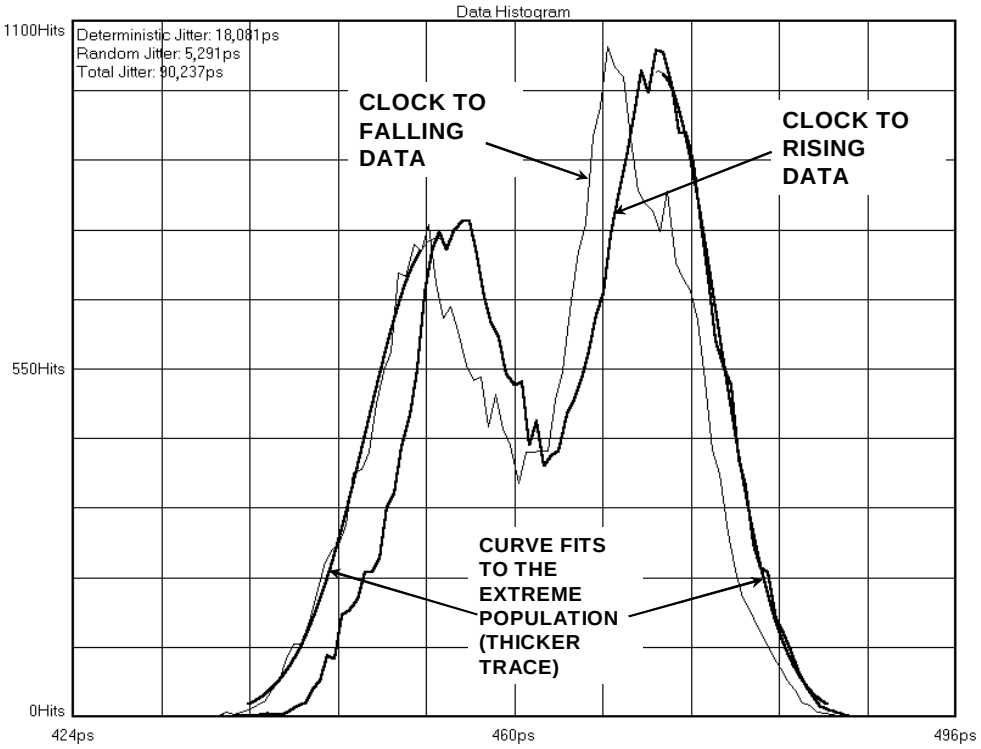

Figure 91 - Option 2 data output format rendition 1 - histogram

Because the clock-to-rising data and clock-to-falling data is measured separately and with the clock in the same bit time as the data edge, it is possible to determine DJ, RJ and TJ with respect to the recovered clock. The skew between the clock-to-rising data and the clock-to-falling data is the shift in the two distributions.

By selecting the appropriate **View** from the software side menu, a composite output is obtained as shown in figure 92. This is rendition 2 of data output format for option 2 measurements. The format for the output always uses the scales shown. Three results are shown: (1) **Bathtub** Curve (CDF), (2) jitter values corresponding to 10^{-12} BER such as DJ, RJ and TJ and, (3) **Effective Jitter.** This is based on post-processing time interval data in the same manner used by BERT scan method. In this example the **Bathtub** curve output and the **Effective Jitter** are nearly identical so only small differences may be seen. Note that effective jitter is a level 1 result if the instrument uses the formulae in clause 8 for the calculation.

--`,,```,,,,````-`-`,,`,,`,`,,`---

Copyright International Organization for Standardization
Provided by IHS under license with ISO
No reproduction or networking permitted without license from IHS Not for Resale

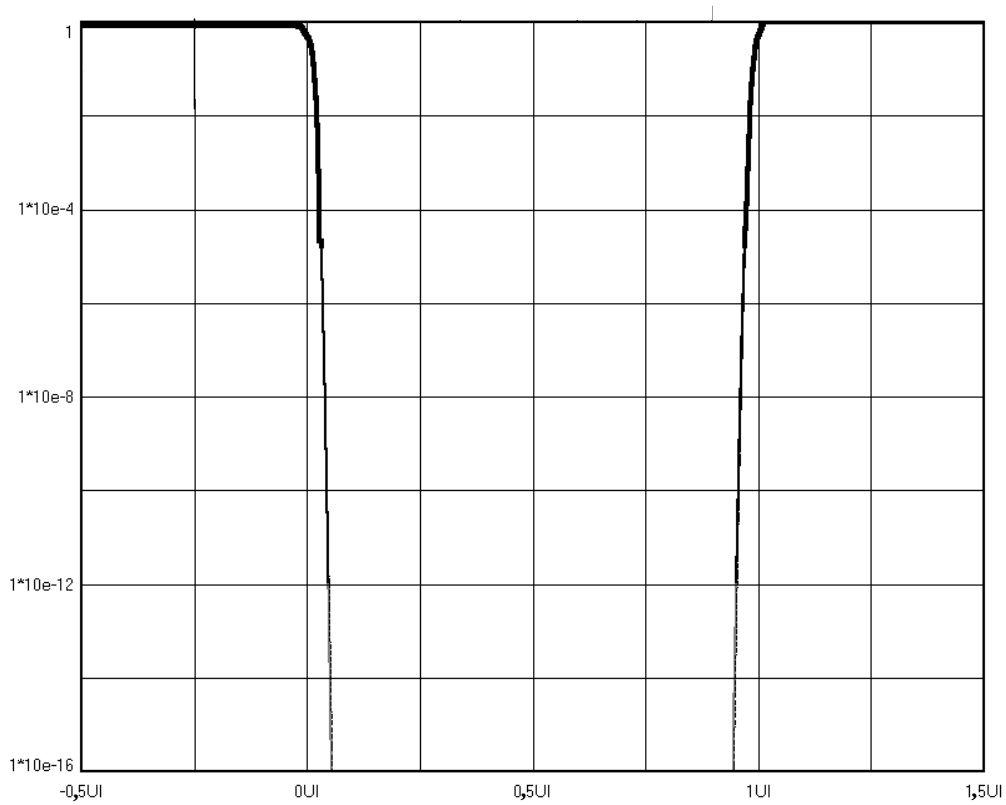

Figure 92 - Option 2 data output format rendition 2 - bathtub curve

The presentation in figure 92 is used as an output format example but the actual data pattern was repeating K28.5 and data was acquired only to the 1E-4 level. This level is adequate for this data pattern but would not be adequate for the CJTPAT that is required when measuring CDFs for level 1 purposes. The curves are asymptotic to the transition density (typically 0,5) although they appear to be asymptotic to 1,0 due to the scales used.

A summary of the measurement statistics may also be obtained, as shown in Figure 93. Values in this example are displayed in ps, but may also be displayed UI. Normalized goodness-of-fit (χ^2_ν) values are reported for both the left and right tail fit curves to the underlying jitter data **histogram**, corresponding to Lt-rmsJ and Rt-rmsJ.

This method measured 90,237 ps of TJ, 18,081 ps of DJ peak-to-peak and 5,291 ps Avg-rmsJ. The latter two values may be compared to the level 1 (see clause 8), Effective Jitter values of 10,245 ps of DJ peak-to-peak and 5,739 ps of RJ (1 sigma).

--`,,```,,,,````-`-`,,`,,`,`,,`---

Copyright International Organization for Standardization
Provided by IHS under license with ISO
No reproduction or networking permitted without license from IHS Not for Resale

Random Data w/Bit-Clock Summary

DJpk-pk	Lt-rmsJ	Rt-rmsJ	Avg-rmsJ	TJ	Hits	
18,081 ps	5,664 ps	4,917 ps	5,291 ps	90,237 ps	70 395	
Average	Goodness-of-fits		1-Sigma	Pk-Pk	Maximum	Minimum
463,704 ps	1,189 504	1,025 072	9,762 ps	53,101 ps	487,061 ps	433,96 ps

V1: -0,020 39 V V2: -0,007 76 V

Effective DJpk-pk	Effective RJ(1sigma)
10,245 ps	5,739 ps

Figure 93 - Option 2 data output format rendition 3 - Summary statistics

Hits is the total number of samples measured.

14.1.5.1 Option 2 acceptable values

Acceptable goodness-of-fit values (χ^2_ν) for 3σ probability confidence level (~10^{-4}) should be in the range of $0,8 < \chi^2_\nu < 1,2$. The level 1 effective DJ and TJ using this method is compared against the maximum jitter specified in the applicable standard.

14.1.6 Option 3 - TIA with arming on bit sequence

14.1.6.1 Option 3 overview

The basic test setup for option 3 is shown in Figure 94. The bit sequence detector (arm generator) provides pattern detection of the data Start of Frame and generates a marker to be used as an arming signal for the TIA.

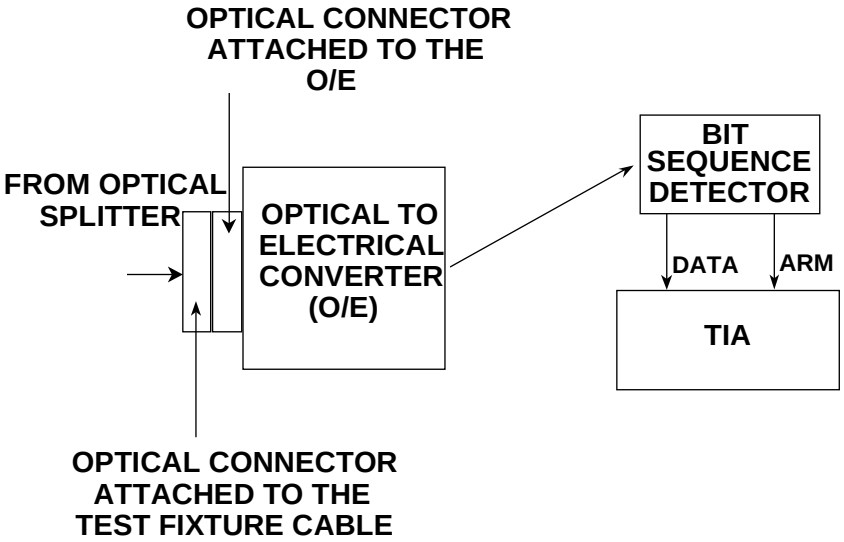

Figure 94 - Option 3 configuration

Copyright International Organization for Standardization
Provided by IHS under license with ISO
No reproduction or networking permitted without license from IHS Not for Resale

14.1.6.2 Option 3 test fixture

The test fixture shown in Figure 84 is used for the option 3 measurements.

14.1.6.3 Option 3 measurement equipment

The measurement equipment required for option 3 is identical to that specified for option 1 in 14.1.3.3 with the additional equipment listed below.

Arm Generator specifications:

Data rates for pattern match	1,062 5 Gbit/s, 1,25 Gbit/s, 2,125 Gbit/s, 2,5 Gbit/s
Data rate range for edge count	up to 2,5 Gbit/s

14.1.6.4 Option 3 calibration procedure

The calibration procedure for option 3 is identical to that specified for option 1 in 14.1.3.4.

14.1.6.5 Option 3 measurement procedure

Set up the configuration shown in figure 95.

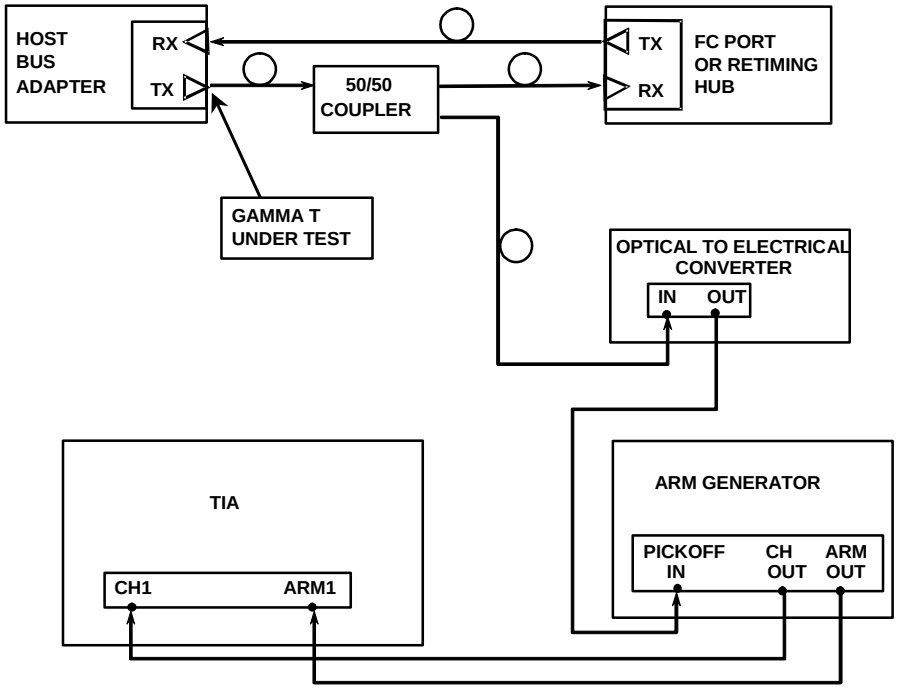

Figure 95 - Option 3 measurement configuration

Set up OE options appropriate for measurement being made using Utilities selection in software main menu. Options include choosing whether or not to amplify the output coming from the fibre optic coupler and selecting from either 4th order Bessel-Thompson filters for 1X or 2X speeds or full bandwidth (no filter).

Measurement set up is accomplished in the software by selecting **Known Pattern with Marker**. Verify that the OE and the arm generator have switch settings set to **Remote** to enable the software control via GPIB.

Setup for the arm generator is conducted via the Utilities function in the software: Select **Pattern Match** mode for patterns contained within compliant Fibre Channel frames such as CRPAT and CJTPAT. Load the

--`,,```,,,,````-`-`,,`,,`,`,,`---
Copyright International Organization for Standardization
Provided by IHS under license with ISO
No reproduction or networking permitted without license from IHS
Not for Resale

Pattern desired, verify Speed, Protocol, as well as channel and arm ports corresponding to Figure 36. In the Automatic Marker Placement menu, press **Perform Placement** to place the pattern marker in a low transition density portion of the pattern.

Verify that other software settings for the OE and TIA are appropriate for measurement. Verify the pattern selected. Under the **Known Pattern with Marker** dataCOM tool selection and under **Acquire Options**, enable the **Quick Mode** option to improve throughput. In **DCD+DDJ Setup**, verify the **DCD+DDJ HPF** (High Pass Filter) is enabled with corner frequency set at 637 kHz for 1X Fibre Channel or 1274 kHz for 2X Fibre Channel. Under **View Options**, verify that **BER** is set for 10^{-12}. All other options should be at default settings.

While under the Known Pattern with Marker selection in the software, select Single Acquire from the top toolbar panel to obtain DJ and TJ values for compliance testing.

14.1.6.6 Option 3 data output format

By selecting the appropriate **View** from the menu, a composite output is obtained as shown in Figure 96. This is rendition 1 of data output format for Option 3 measurements. The format for the output always uses the scales shown. Three results are shown: (1) **Bathtub** Curve (CDF), (2) jitter values corresponding to 10^{-12} BER such as DJ, RJ and TJ and, (3) **Effective Jitter.** This is based on post-processing time interval data in the same manner used by BERT scan method. In this example the **Bathtub** curve output and the **Effective Jitter** are nearly identical so only small differences may be seen. Note that effective jitter is a level 1 result.



Figure 96 - Option 3 data output format rendition 1 - Bathtub curve

A summary of the measurement statistics may also be obtained as shown in Figure 97. This method measured 0,088 133 UI of DJ pk-pk, 0,005 252 UI of RJ (1 sigma) and 0,150 371 UI of TJ. The measured DJ and RJ values may be compared to Effective Jitter values of 0,051 117 UI of DJ pk-pk and 0,006 971 of RJ (1 sigma).

Copyright International Organization for Standardization
Provided by IHS under license with ISO
No reproduction or networking permitted without license from IHS Not for Resale

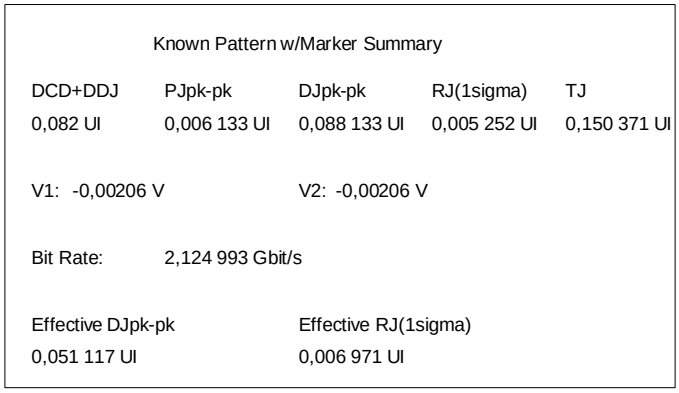

Figure 97 - Option 3 data output format rendition 2 - Summary

14.1.6.7 Option 3 acceptable values

The level 1 effective DJ and TJ using this method is compared against the maximum jitter specified in the applicable standard.

14.2 Electrical Gamma T using a real time oscilloscope

14.2.1 Overview

This method utilizes a real time oscilloscope with Serial Data Compliance and Analysis software to perform a compliance test to the FC-PI-2 specification at (2,125 Gbit/s). A real-time eye diagram is presented along with a bathtub curve plot. Measurement results include Amplitude, Timing and Jitter measurements along with a Pass/Fail statement to the specification limits in the standard.

This data rate is offered as an example. Testing at other data rates is similar.

The data pattern is a CJTPAT (2,640 bits) repeating pattern. Waveform masks and measurement limits may also be imported for Pass/Fail testing.

The Golden PLL requirement is implemented in software internal to the instrument in this example.

14.2.2 Test Fixture and termination

This method assumes that the link is broken at the Gamma T test point, a test fixture is used to adapt the link to a 100 Ω differential end-to-end termination (50 Ω/side). If a 150 Ω transmitter is used the methods described in Annex A may be used on the test fixture to convert to the 100 Ω instrumentation environment. This measurement may be done in two ways with a real-time oscilloscope. The first method is to terminate each side of the differential signal into Ch1 and Ch2 of the oscilloscope and make measurements on the “pseudo-differential” Ch1 minus Ch2 waveform.

Copyright International Organization for Standardization
Provided by IHS under license with ISO
No reproduction or networking permitted without license from IHS Not for Resale

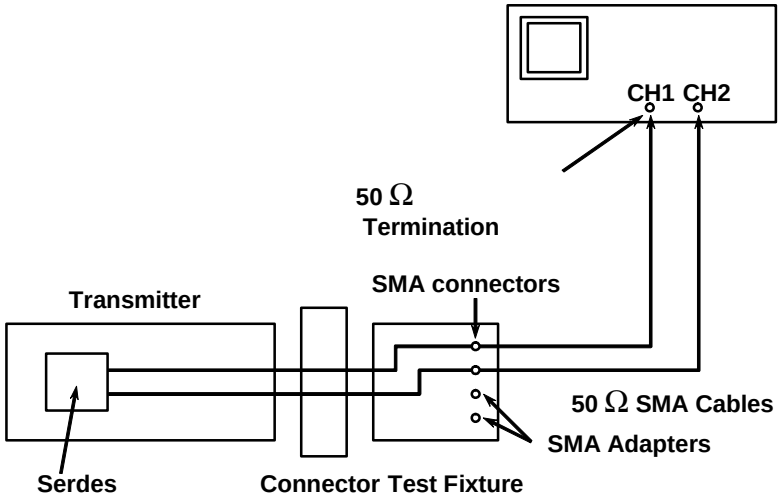

Figure 98 - Test fixture and termination Option 1

A second method is to use a SMA input differential active probe. The diagram for this probe is shown in Figure 99.

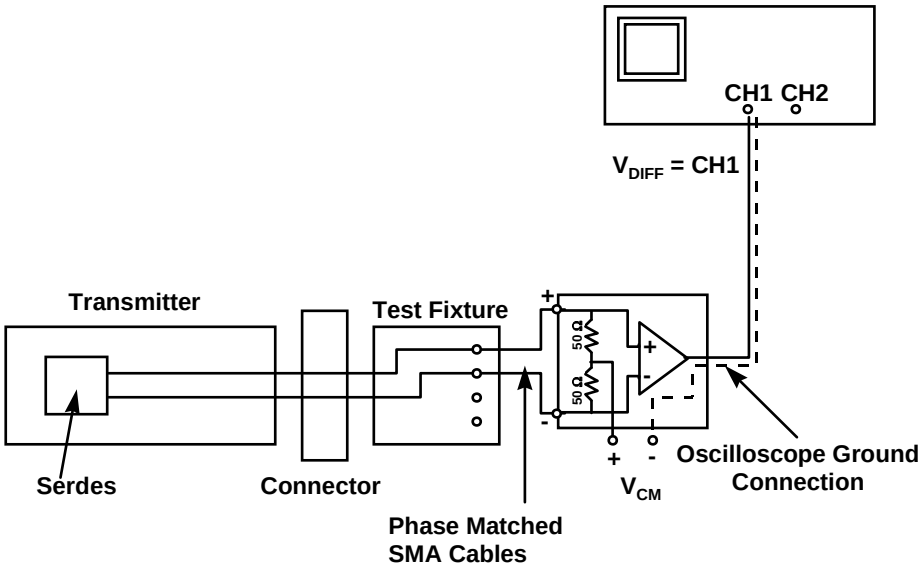

Figure 99 - Test fixture and termination Option 2

14.2.3 Measurement Equipment

SMA Input Differential Probe:

Bandwidth:5 GHz
Risetime (20 to 80):65 ps

Copyright International Organization for Standardization
Provided by IHS under license with ISO
No reproduction or networking permitted without license from IHS Not for Resale

Oscilloscope

NOTE The acquisition system required for the analysis within the RT scope may be fundamentally different than what exists in some RT scope instruments.

System Bandwidth:4 GHz
Sample Rate:20 GS/s
Record Length:32 Meg

System Risetime (20 to 80)
75 ps system BW with probe

Analysis Software
Suitable for a real time oscilloscope jitter measurement

14.2.4 Measurement Procedure

The procedure described below is derived from a specific instrument and software package. Achieving the desired function may be different for different instruments and software packages.

1) Connect Device Under Test (DUT) to Channel 1 of the oscilloscope using the differential probe is shown in figure 99.
5) Press the **Default Set-up** button on the oscilloscope to start from a known state.
6) Press front panel **AUTOSET** button to view waveform.
7) **Run Application > Serial Compliance and Analysis** from Oscilloscope **File** menu. Perform the following setup sequence.
8) From **Measurement > Select** menu, select desired Amplitude, Timing and Jitter Measurements (figure 100). **Jitter at BER** measurement is selected to perform Spectrum approach to jitter specified in 10.6.3 and yields the level 2 RJ, DJ (and its components) and TJ results.

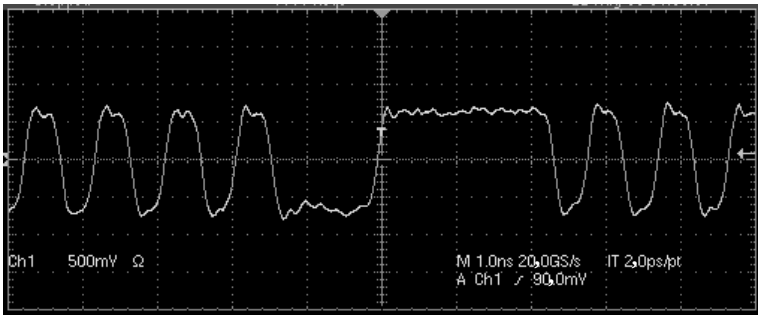

Figure 100 - Real time waveform display

From the software application, press **Autoset**, this will scale the Vertical Scale and Ref Level for best measurements.

Set horizontal Scale to capture 20 µs (**2 µs/div**) at **50 ps/pt**. This represents 42,500 consecutive unit intervals - enough to capture 100 epeats of the jitter test pattern that is required by the spectrum approach for accurate jitter measurements.

In the **Measurements > Configure > Jitter** menu (shown in figure 101), select **FC2125:2,125 Gbit/s** as the standard specification. This sets the corner frequency for the software based Golden PLL. Also confirm that the **BER is 10^{-12}** and that the pattern is **CJTPAT**.

Copyright International Organization for Standardization
Provided by IHS under license with ISO
No reproduction or networking permitted without license from IHS Not for Resale

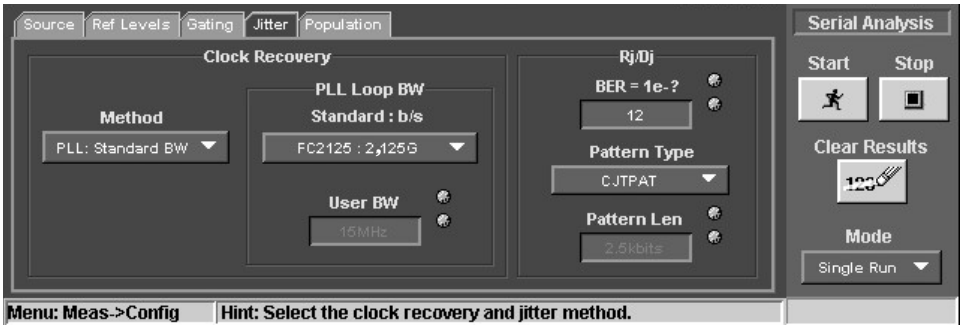

Figure 101 - Controls for setting the measurement and analysis parameters

Go to the Plots Select Menu and Select **Eye Diagram** and **Bathtub Curve** as plots. The 2,125 Gbit/s mask may be imported as a user mask. Press Start.

14.2.5 Measurement results

The results of the measurement are shown in figure 102.

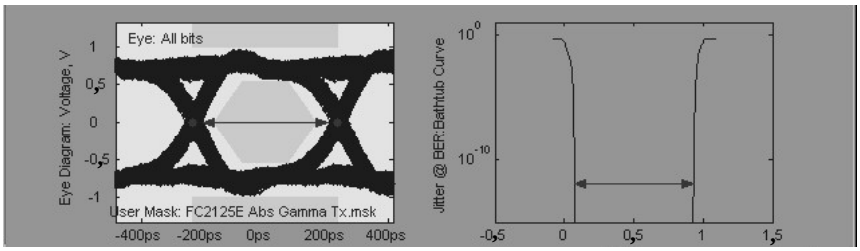

Result Summary: Select View: All Stats

Measurement	Mean	Min	Max	Pk-Pk	Status
Jitter: Eye Opening	404,70ps	404,44ps	405,14ps	697,27fs	
Jitter: Deterministi...	61,635ps	60,748ps	63,270ps	2,5224ps	
Jitter: Total (TJ)	65,892ps	65,446ps	66,143ps	697,26fs	
Rise Time	120,53ps	95,044ps	158,95ps	63,903ps	
Fall Time	113,71ps	95,706ps	141,90ps	46,194ps	
Unit Interval	470,59ps	470,51ps	470,66ps	148,24fs	
Bit Rate	2,1250Gb/s	2,1247Gb/s	2,1254Gb/s	669,41kb/s	
Diff Amplitude	1,6425V	1,4445V	1,8678V	423,28mV	

Figure 102 - Measurement results

The real time eye diagram and the jitter CDF/BER bathtub curve are shown as plots. These plots could be exported to a separate system to calculate the level 1 DJ and TJ compliance values specified in clause 8. However, In this example it is assumed that the calculation for DJ and TJ is executed internally to the instrument and uses the method described in clause 8 as any other method produces a level 2 result.

The arrow on the bathtub curve indicates the estimated jitter eye opening at 1E-12 BER. The waveform eye diagram is compared to the jitter mask. The jitter eye opening is also shown relative to the actual waveform eye opening. Amplitude, timing and jitter measurements are shown on the bottom of the display. The time scale on timing measurements may be toggled from time to UI scale in order for comparison to the specification. In the measurement summary view, measurements for jitter eye opening, total jitter (TJ) and deterministic jitter (DJ) are displayed.

Copyright International Organization for Standardization
Provided by IHS under license with ISO
No reproduction or networking permitted without license from IHS
Not for Resale

Statistics for these measurements Mean, Min and Max are available for a single acquisition if the sequence control is set to Single Run and multiple acquisitions if the sequence control is set to Free Run. Measurements for level 2 DDJ, ISI, PJ and RJ are available by pressing the Details button and selecting Jitter at BER from Measurement Details pulldown menu. Other signal quality parameters are measured as well, such as rise time, fall time, bit rate and differential voltage.

14.3 Optical and electrical Gamma T using a jitter optimized sampling oscilloscope

14.3.1 Overview

The following describes a jitter test procedure using a wide-bandwidth equivalent time sampling oscilloscope. The hardware acquisition system is updated from the classical equivalent time sampling oscilloscope to allow efficient sampling in the context of jitter measurements, thus allowing the procedure to be performed in a short time duration. The procedure describes the pattern requirements, interface to the measurement equipment and equipment configuration. Upon completion of the test, the cumulative distribution function is reported as well as random and deterministic jitter components.

A 2X (2,125 Gbit/s) electrical and a 10X (10,5 Gbit/s) optical signal is used for this example, but the general procedure is valid for data rates below and above this rate such as 1,062 5 Gbit/s and 4,25 Gbit/s. The data pattern must be continuously repetitive for an equivalent time oscilloscope. In this example, CRPAT, CSPAT and CJTPAT sequences are analyzed and compared.

14.3.2 Measurement configuration

For an optical Gamma T measurement, the signal may be derived through a coupler as shown in figure 84 or directly connected to the oscilloscope as shown in figure 103. The equivalent time oscilloscope requires a trigger (time reference) for precise sampling to occur. The trigger may come from a reference clock as shown in figure 103 or may be derived from the signal under test via a Golden PLL as shown in figure 104. If the configuration in figure 103 is used for level 1 purposes one must add the effects of the Golden PLL in software via methods not specified in this document. The configuration shown in figure 104 is the one documented for producing level 1 CDFs.

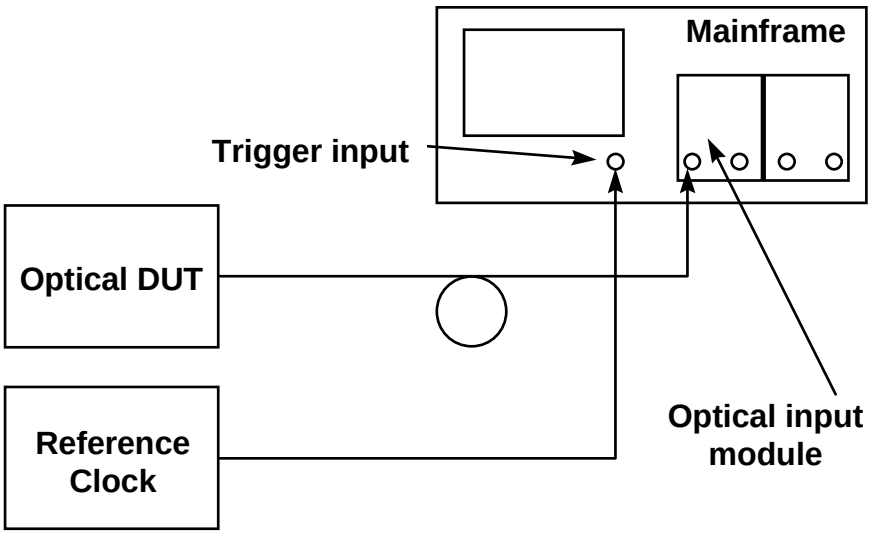

Figure 103 - Reference clock trigger configuration for optical DUT

Copyright International Organization for Standardization
Provided by IHS under license with ISO
No reproduction or networking permitted without license from IHS
Not for Resale

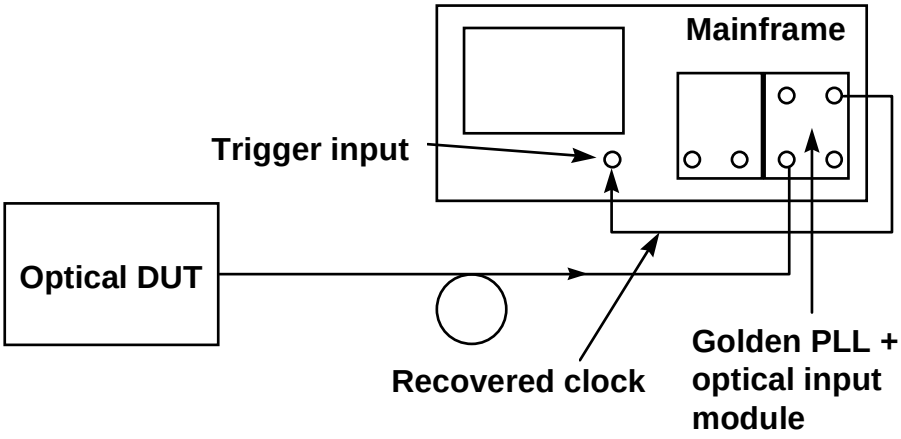

Figure 104 - Golden PLL trigger configuration

For an electrical Gamma T measurement, the 100 Ω differential lines are connected to two channels of the oscilloscope through phase matched cables as shown in figure 105. The instrument produces a pseudo-differential signal through a subtraction math function. (Alternatively, for signals below 4 Gbit/s, the two lines may be connected to a differential SMA probe head).

Triggering may be achieved with a reference clock as shown in figure 105 or a via a Golden PLL clock derived from the signal under test as shown in figure 106. If the configuration in figure 105 is used for level 1 purposes one must add the effects of the Golden PLL in software via methods not specified in this document. The configuration shown in figure 106 is the one documented for producing level 1 CDFs. The clock recovery module is single ended and may accept the differential signal from the probe to derive the clock, passing the signal into a single oscilloscope channel.

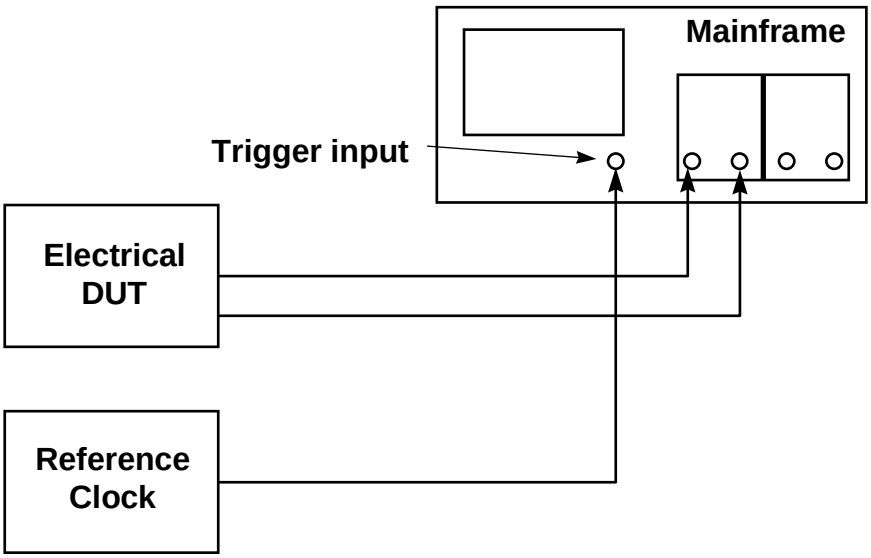

Figure 105 - Reference clock trigger configuration for electrical DUT

Copyright International Organization for Standardization
Provided by IHS under license with ISO
No reproduction or networking permitted without license from IHS
Not for Resale

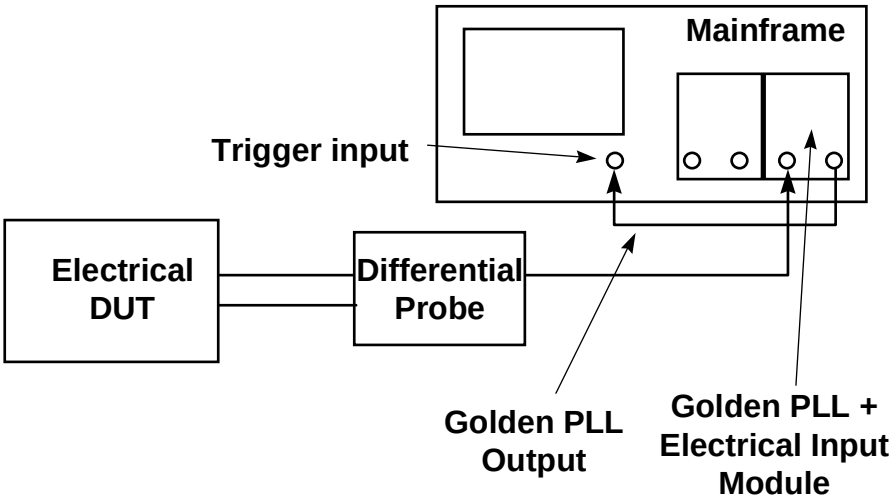

Figure 106 - PLL trigger configuration

14.3.3 Measurement equipment

Measurement equipment capable of executing the Enhanced EQ scope methodology from any supplier may be used.

Oscilloscope: Instrument capable of executing the Enhanced EQ scope algorithm

NOTE The acquisition system required for the analysis within the Enhanced EQ scope is fundamentally different from what exists in ordinary EQ scope instruments.

Plug-in Channel
Suitable for the Enhanced EQ scope mainframe
System Bandwidth
15 GHz or 10 Gbit/s reference receiver (filtered)
Golden PLL
Clock recovery module that meets the requirements in 6.10.2.

14.3.4 Measurement procedure

Connect the signals and trigger according to the desired configuration.

Select the **Jitter Mode** (front panel key).

At this point the analyzer automates the remainder of the measurement process. The pattern length is automatically detected. An effective pattern or frame trigger is produced by the instrument, allowing the analysis of each bit within the pattern. The oscilloscope will determine the uncorrelated jitter components through measurements at a few select bit edges. The oscilloscope will sequence through the entire pattern to determine jitter elements correlated to the pattern. The inherent problem of a relatively low sample rate leading to excessive measurement times is mitigated through focusing the sampling process specifically on data edges. For the shorter patterns in the 2 bit to 3 000 bit length, approximately 5 s are required to complete the entire measurement process. For patterns in the 20 000 bit range, the measurement process takes approximately 20 s.

Copyright International Organization for Standardization
Provided by IHS under license with ISO
No reproduction or networking permitted without license from IHS Not for Resale

14.3.5 Measurement results

14.3.5.1 Electrical Gamma T results at 2,125 Gbit/s

Measurement results for an electrical Gamma T operating at 2,125 Gbit/s using the CJTPAT, the CRPAT and the CSPAT sequences are shown in this sub clause. The figures show typical level 2 outputs in the form of the constituent components of jitter. The level 1 cumulative distribution function is reported separately as are the level 1 DJ and TJ results (not shown). Note that the signal is required to pass the CJTPAT for level 1 purposes but other compliant patterns may be worse. The worst compliant pattern should be used for level 1 testing.

Figure 107 shows results using the CJTPAT.

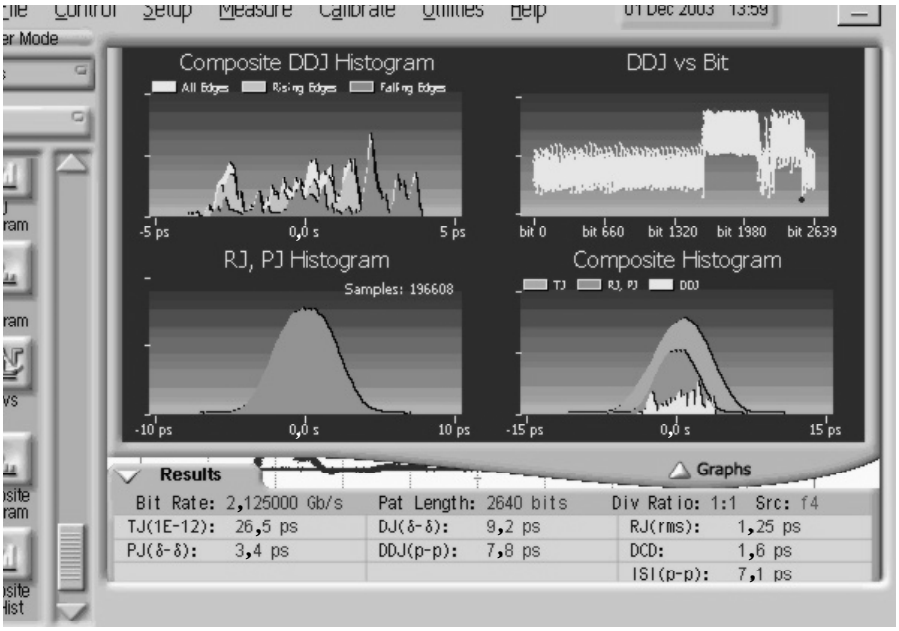

Figure 107 - CJTPAT Electrical Gamma T results

Figure 108 shows the results using the CRPAT:

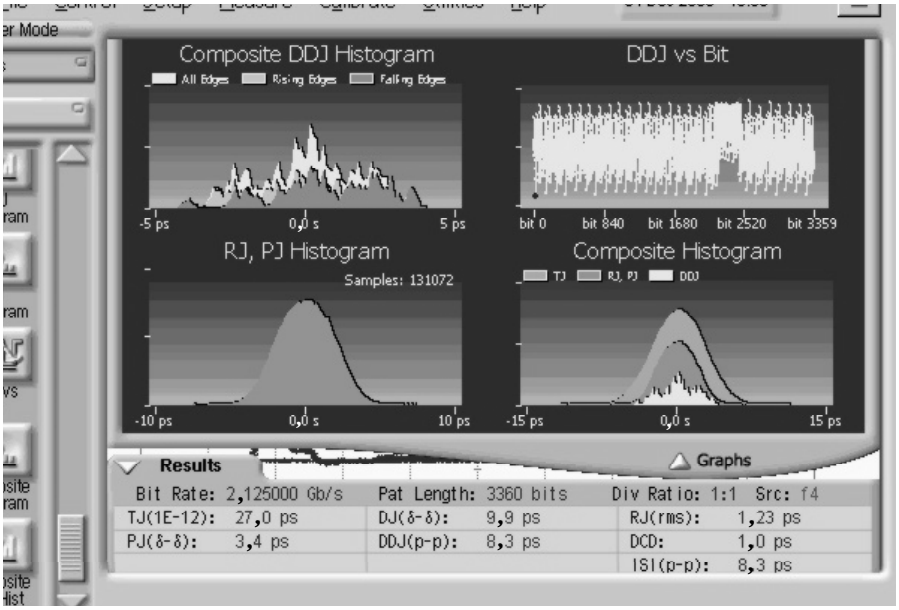

Figure 108 - Electrical Gamma T CRPAT results

--`,,```,,,,````-`-`,,`,,`,`,,`---

Copyright International Organization for Standardization
Provided by IHS under license with ISO
No reproduction or networking permitted without license from IHS Not for Resale

Figure 109 shows the results using the CSPAT.

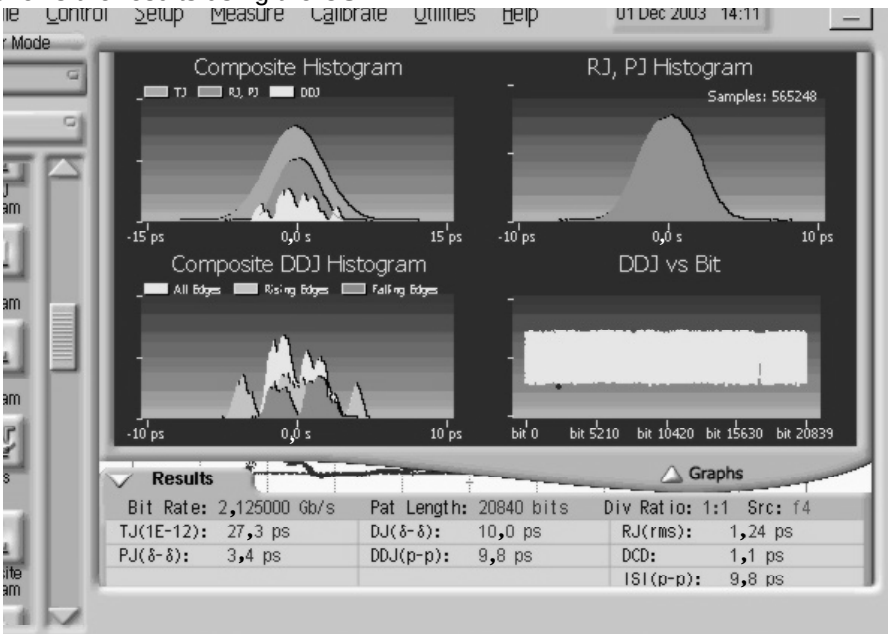

Figure 109 - Electrical Gamma T CSPAT results

14.3.5.2 Optical Gamma T results at 10,518 75 Gbit/s

Measurement results for an optical Gamma T operating at 10,518 75 Gbit/s using the CJTPAT sequence are shown in figure 110. Figure 110 shows typical level 2 outputs in the form of the constituent components of jitter. The level 1 cumulative distribution function is reported separately as are the level 1 DJ and TJ results (not shown).

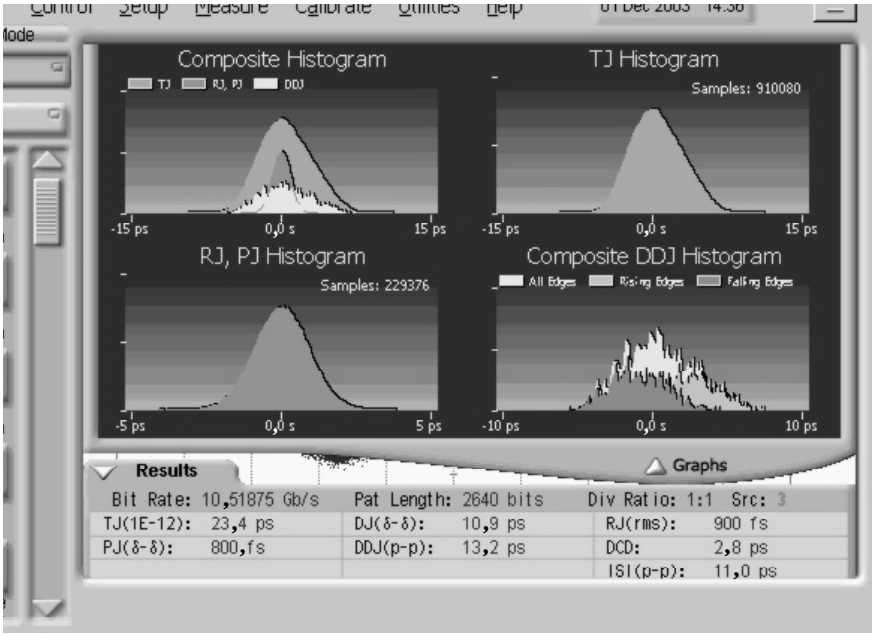

Figure 110 - Optical gamma T at 10,518 75 Gbit/s

NOTE The data shown is for a 10,518 75 Gbit/s data stream however the 10GFC standard does not require this measurement as described.

Copyright International Organization for Standardization
Provided by IHS under license with ISO
No reproduction or networking permitted without license from IHS
Not for Resale

14.4 BERT Delta R signal tolerance

14.4.1 Overview

This sub clause is an example of how the BERT methods given in 10.4 may be applied to calibrate a signal for signal tolerance testing at a 2,125 GBd Delta R point. This type of point is typically found in an HBA, switch, disk array, etc. and is typically the point where an SFP form factor removable PMD connects to the host side deserializer. The signal tolerance of the link segment from the Delta R connector through the host side deserializer is the DUT. As with any signal tolerance measurement the criteria for success is that the link receiver (the host side deserializer in this case) deliver adequate BER performance when the weakest specified signal is applied to the interoperability point.

It may be desirable to use a functional SFP removable PMD module as part of the calibrated signal path since this module has the correct Delta R connector. This may be problematic because the functional SFP may not allow adequate adjustment of the signal parameters required for the signal tolerance measurement due to the active circuitry in the functional SFP module. The procedure described in 14.4 assumes use of a specially designed passive test fixture that is compatible with the Delta R SFP connector on the host side to gain access to the physical Delta R point in the DUT. The test fixture is also compatible with the instrumentation connector on the other side.

The basic process for executing the signal tolerance measurement is:

1) calibrate the signal to be used for the signal tolerance measurement into an ‘ideal’ instrument,
2) adjust the signal properties to be at the weakest allowed condition (lowest amplitude, highest jitter),
3) disconnect the measurement equipment used for the calibration at the Delta R connector,
4) reconnect the calibrated signal to the actual Delta R point,
5) measure the BER from the deserializer in the host with the calibrated signal incoming.

14.4.2 Measurement configuration for signal calibration

Figure 111 shows the DJ portion of the setup for calibration of the signal.

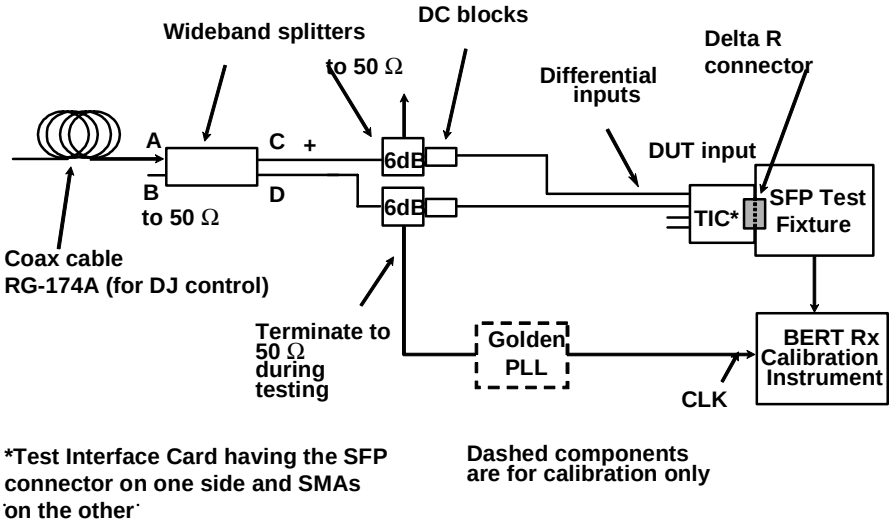

Figure 111 - Measurement configuration for signal calibration

The Pattern Generator and the other parts of figure 78, including the RJ (random jitter) and SJ (sine jitter) generators are connected to the input to the Coax cable in figure 111. The device to be tested has a receptacle for SFP form factor modules. The measurement configuration is designed to be used for 2,125 GBd.

Copyright International Organization for Standardization
Provided by IHS under license with ISO
No reproduction or networking permitted without license from IHS Not for Resale

Unlike figure 78, this setup uses a single length of coax instead of twin-axial cable to create DJ (DDJ in this case). Coax is used for simple direct connection to standard 50 Ω test equipment and SMA interfaces. A single cable is used instead of two to reduce the undesirable effects of skew. Since a single cable is used, a wideband RF splitter is required to split phases and create a differential signal.

The differential signal is tapped for clock recovery using a Golden PLL. In figure 111, two additional wideband resistive splitters are used for this purpose. One splitter creates the tap for the Golden PLL and the other splitter is used to balance the imperfections in the complementary path. The unused port on the third splitter is terminated into 50 Ω. Resistive splitters improve isolation from poor return losses if poor return losses exist. DC blocks are included in each path to emulate the series capacitors required in SFP receiver outputs. Otherwise, the low resistances at DC in the splitters would ground the inputs to the HBAs receiver under test, that could cause damage unless the receiver had its own DC blocking.

14.4.3 Calibration test fixtures

The TIC (test interface card) in figure 111 converts the SMA coaxial cabling into a physical form factor matching the electrical end of an SFP module so it may be plugged into the HBA's input. For signal calibration, the TIC is plugged into an SFP test fixture, that converts the SFP differential signals into a pair of 50 Ω coax paths for analysis by the Calibration Instrument. The TIC card shall be optimized for minimal insertion and return loss across the frequency band of interest.

14.4.4 Signal calibration procedure

14.4.4.1 Initial DDJ calibration

Setup the pattern generator (see figure 78) to transmit alternating K28.5 characters. With the sine and random jitter sources disabled (turned off), adjust the length of the coaxial cable until approximately the target amount of DJ is observed. This may be done with the BERT or a normal equivalent time sampling oscilloscope. The oscilloscope is allowed in this case because this calibration set is only an approximation, there is little random jitter and the pattern is short and highly visible.

Using a K28.5 pattern the Golden PLL will have virtually no effect on the measured DJ. Using the Golden PLL is therefore optional for this step and a direct clock trigger from the pattern generator may be used.

NOTE Without the effects of the Golden PLL, the peak-to-peak DJ with K28.5s will be very close to the peak-to-peak DDJ with CJTPAT when high-quality pattern generators, wideband splitters and other high performance equipment is used. The pk-pk DJ values will be significantly different, however, when the effects of the Golden PLL are included.

The target pk-pk value for DJ for the delta point tolerance test at 2,125 Gbd is 0,39 UI (TJ is 0,59 UI). In this setup, this amount of jitter requires approximately 22 feet of RG174A coax cable.

14.4.4.2 Initial RJ calibration

With sine jitter (SJ) turned off (see figure 78), adjust the Gaussian noise source to achieve ~0,014 UI rms (0,014 = (TJ-DJ)/14, or (0,59-0,39)/14) with a repeating K28.7 square wave on an equivalent time scope using the pattern trigger from the pattern generator. The factor of 14 assumes a truly Gaussian source, but this is allowed in this case because this phase is only setting an estimated value for peak-to-peak RJ. The Golden PLL is also not necessary for this approximation.

This measurement may also be done with an eye (still using K28.7s) on a BERT with a clock input. Assuming that all other sources of jitter are negligible, a good approximation is to measure RJ at a BER = 1E-9. For a Gaussian function, peak-to-peak RJ at 1E-9 BER is ~12 times the target rms value of 0,014 UI, or ~0,17 UI peak-to-peak.

14.4.4.3 SJ (sine jitter) calibration

For SJ calibration, RJ and other DJ shall be minimized. The golden PLL shall be used to calibrate the SJ (to 0,1 UI peak-to-peak), since its magnitude at low frequencies would completely close the eye if tracking was not used. A direct clock trigger (no Golden PLL) shall be used. The magnitude of SJ at each frequency

Copyright International Organization for Standardization
Provided by IHS under license with ISO
No reproduction or networking permitted without license from IHS Not for Resale

is the effective DJ value as determined by the methods in clause 8**.** The slopes of the bathtub curves should be very steep.

SJ calibration shall be accomplished at numerous points along the sine frequency template to ensure the SJ amplitudes are being met.

SJ is turned off for the remainder of the calibration steps.

14.4.4.4 Final DJ and TJ calibration

For all the following calibration measurements, the BERT is used and all values measured from this point forward are to be effective jitter as defined in clause 8. The BERT should be operated as described in 10.4.

1) Switch to CJTPAT and add the Golden PLL clocking. With the initial cable length determined above, the observed DJ will be more than is required. In this particular example, it was measured to be more than required due to the interaction of CJTPAT, DDJ and the golden PLL.
2) Adjust the Gaussian noise source until effective RJ = 0,20 UI peak-to-peak (RJ = TJ-DJ = 0,59-0,39).
3) Iteratively measure/adjust the DJ (cut cable) and RJ settings to achieve the correct fit to the required effective jitter values. The mathematical methods given in 10.4.2 should be used. If the initial RJ calibration was close, very little change should be required, but the DJ cable will require shortening.

For results, in this example, the final length of cable that achieved the final jitter values was approximately 20 feet for the 2,125 GBd rate.

Figure 112 shows the results of the final BERT scan. These results are shown in jitter form rather than bathtub form (jitter form is achieved by moving the left side/slope of the bathtub curve up by 1 UI, such that the plot shows the width of the eye crossing rather than the width of the eye opening). The solid dots are the measured error rates along the right side of the jitter plot and the circle points are the measured error rates along the left side of the jitter plot. The dashed line is the effective jitter function plotted against the right side measured points and the solid line is the effective jitter function plotted against the left side measured points.

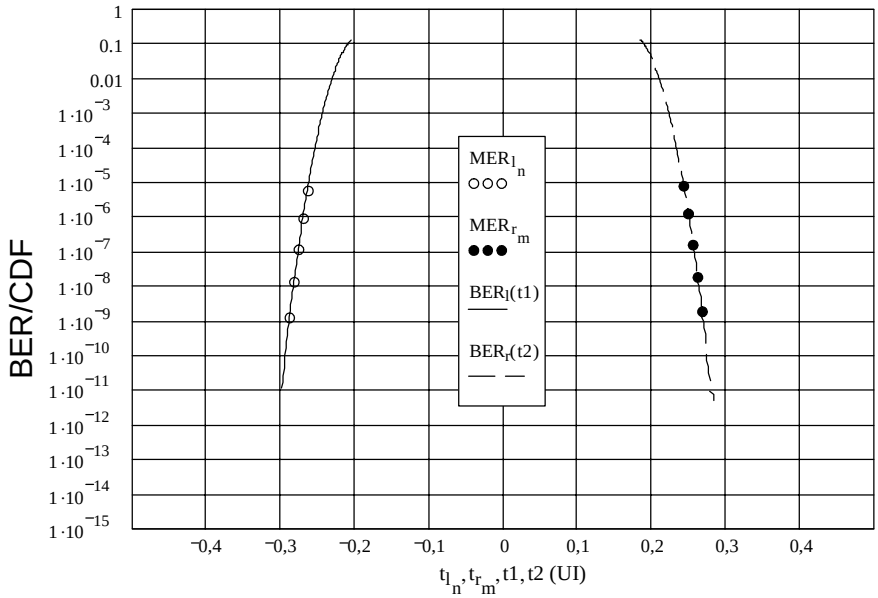

Figure 112 - Final BERT scan results

Copyright International Organization for Standardization
Provided by IHS under license with ISO
No reproduction or networking permitted without license from IHS
Not for Resale

To verify the effect of the Golden PLL, a scan was re-run with direct triggering from the pattern generator without the Golden PLL. A significant change in DJ was seen. The peak-to-peak effective DJ value dropped to 0,27 UI peak-to-peak. This change is due to the interaction of the Golden PLL with CJTPAT in the presence of a DDJ mechanism. The value for effective RJ changed very little.

14.4.4.5 Eye amplitude calibration

After calibration of the jitter values, the vertical opening of the eye is also calibrated. For this task perform the following step in the order shown:

1) set the sampling time in the center of the eye opening;
2) adjust the BERT's threshold upward from the nominal (average) value until a high error count is achieved;
3) scan the threshold down until the target BER (1E-12) is achieved;
4) repeat these steps in the opposite direction for the bottom of the eye;
5) adjust the pattern generator's amplitude until the difference between the two 1E-12 threshold settings is equal to the specified value (0,37 V peak-to-peak) for 2,125 GBd.

NOTE The exact mathematical methods may be used to predict deterministic, random and total eye closure in the voltage axis as are used for jitter in the time axis.

When completed, re-confirm the jitter values. If required, iteratively measure and adjust the settings until all jitter and eye opening values are achieved. Depending on the settings, losses, etc., wideband amplification may be required from the pattern generator to obtain the desired amplitude.

14.4.4.6 Add SJ

Calibration of SJ was accomplished previously. At this point, no further calibration should be necessary. Turn SJ back on to the frequencies and magnitudes as required for the signal tolerance test.

This completes calibration of the signal to be used for the Delta R signal tolerance measurement. The system is now ready to be used for delta point testing.

14.4.5 Signal tolerance testing

The TIC should now be unplugged from the SFP test fixture in figure 111 and plugged into the HBA's SFP port under test for testing. When the test is run, be sure that all other requirements are satisfied, such as enabling all appropriate crosstalk mechanisms, etc. The signal tolerance test output is the BER from the receiver in the HBA.

See 11.2.7 for BER measurements from the link receiver.

14.4.6 Data output format

The format shown in figure 112 is suitable for the jitter requirements. Commercial BERT jitter testers are now available that are capable of automating many of the tasks required for signal tolerance calibration and have similar data output formats. Figure 113 shows an example, from another test, of a display from a commercial BERT used to measure jitter at a data rate of 1,062 5 Gbd.

Copyright International Organization for Standardization
Provided by IHS under license with ISO
No reproduction or networking permitted without license from IHS Not for Resale

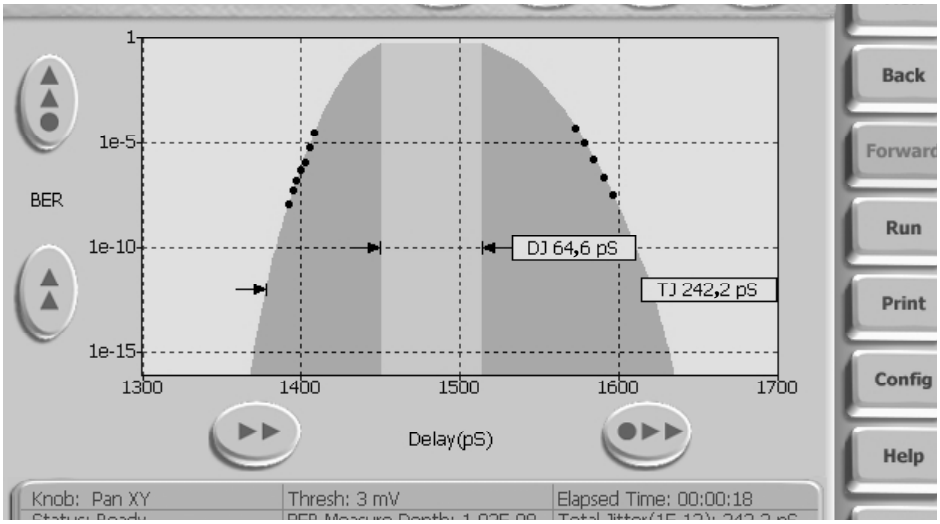

Figure 113 - Example of an automated BERT scan similar to figure 112

14.4.7 Acceptable values

Values for link BER shall not exceed 1E-12 when the calibrated signal tolerance signal is applied to the interoperability point.

Copyright International Organization for Standardization
Provided by IHS under license with ISO
No reproduction or networking permitted without license from IHS
Not for Resale

Annex A
(informative)

Test bit sequences

A.1 Test bit sequence characteristics

A.1.1 Introduction

Test bit sequences are the bit sequences that are transmitted by a serializer onto a link or bit sequences received by a deserializer from the link used to test an FC link's jitter compliance. Test bit sequences have a significant impact on stressing the link's jitter characteristics.

Several examples of test bit sequences are described in this annex to illustrate how bit sequences stress different aspects of a CDR circuit.

Continuous stream of idle primitives: This pattern is present during normal link operation when no frames are being transmitted. This primitive is also part of some of the more complex patterns listed below.

Low-frequency pattern: This pattern contains bit sequences that generates low-frequency spectral components that may produce severe signal distortion if the 3 dB low-frequency cut-off of any high-pass filter or component is not chosen correctly. Because it represents nearly the maximum signal bandwidth required for any pattern, it is suspected of suffering the most from signal distortion on a metallic transmission line. (This second point remains to be proven by simulations or experiments).

Low-transition density patterns: These patterns contain bit sequences that have long runs of 1 s or 0 s.

High-transition density patterns: These patterns contain bit sequences that have short runs of 1 s and 0 s.

Composite patterns: A composite pattern contains combinations of the above three types of patterns.

Low- and high-transition density patterns are meant to generate pattern dependent timing jitter from line distortions. Composite patterns tend to be patterns that test various components on the link, such as the receiver clock recovery circuits.

Copyright International Organization for Standardization
Provided by IHS under license with ISO
No reproduction or networking permitted without license from IHS Not for Resale

A.1.2 Low-frequency pattern

Low frequencies in the spectrum may be generated by following the outer contours of the trellis diagram of figure A.1 that represents the disparity versus time for the Fibre Channel 8B/10B code.

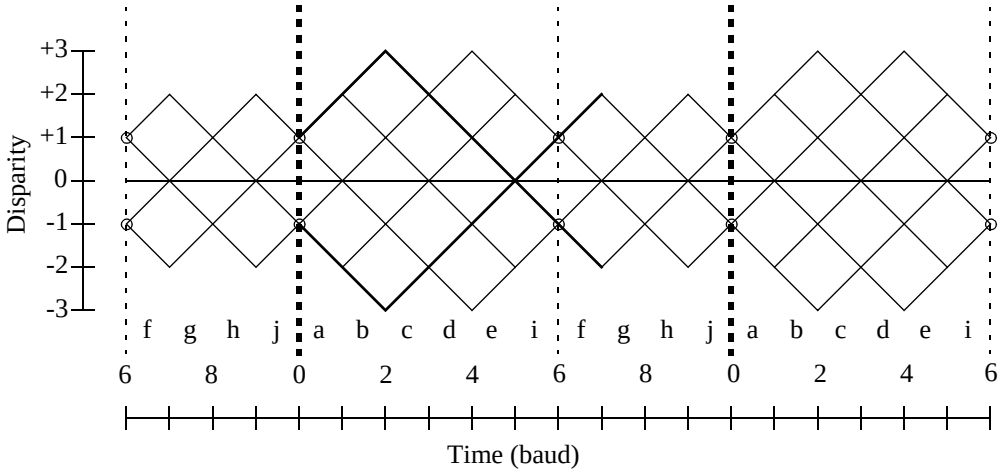

Figure A.1 - 8B/10B code trellis diagram

Starting at a byte boundary with a running disparity of +1, the pattern '1101001010' (D11.5) follows the upper contour and encloses the maximum area between the zero disparity line and the upper envelope of all possible patterns. D11.5 is repeated for n bytes, where n is 12 or greater. Then a rapid transition is made to the lower envelope by the pattern '1101001000' (D11.7). Then the pattern '0010110101' (D20,2) follows the lower contour and is also repeated n times. The transition back to the upper contour is accomplished by the pattern '0010110111' (D20.7), followed by 2 bytes of D11.5. This sequence includes a run of 5 zeros followed by a single 1, and a run of 5 ones followed by a single 0. These 2 sequences are usually most prone to errors. The larger the value of n, the lower the frequencies generated. The worst case is approached asymptotically with increasing n.

Simulations with this kind of pattern, passing through a single pole high-pass filter may cause amplitude and time penalties. Table A.1 shows these penalties with the parameter n at 12 and the 3 dB cutoff at a frequency ‘f’ expressed as a fraction of the baud ‘fo.’ The eye closure penalty expresses the amplitude penalty in dB and in the time domain penalty as a fraction of a baud (UI). The simulation model includes also a low-pass filter as specified for FC optical measurements with a cut-off at 0,75 of the signalling rate expressed in baud. For example, for a signaling rate of 1 063 MBd, a 3 dB cutoff of 1,06 Mhz is approximately 0,001 (f/fo).

Patterns with n=100 and using the special character K28.5 for the transitions between the upper and lower contours have produced additional eye penalties from 0,05 dB for the lower values of f/fo up to 0,4 dB for the larger values.

Copyright International Organization for Standardization
Provided by IHS under license with ISO
No reproduction or networking permitted without license from IHS Not for Resale

.

Table A.1 - Eye closure penalties for low-frequency pattern with n=12

3 dB cut-off f/fo	**Amplitude penalty** dB	**Time penalty** UI
0,000 1	0,02	
0,000 2	0,03	
0,000 5	0,08	0,015
0,001 0	0,18	0,025
0,002 5	0,53	0,04
0,005	1,12	0,06
0,01	2,15	0,1
0,02	4,10	0,175
0,04	8,13	0,23
0,05	10,1	0,275

From the above it is clear, that the recommendation for the lower 3 dB cut-off at 0,04 of the baud as specified in Table F.6 of Appendix F of the Fibre Channel (FC-PH) is misleading and would require extensive signal conditioning.

Table A.2 shows the low-frequency pattern as described above. As with all similar tables in this annex, the table is broken up into four representations of the pattern that include the FC characters (with the 8b hex values), encoded 10b hex, binary and 40b hex word. The first row contains the FC characters used and defined in clause 11 of FC-PH. The second row contains the encoded 10b hex values for each character. These 10b values are in little endian format. They may be used when looking at the encoded/decoded parallel data. The third row contains the transmission in-order binary data. The fourth row contains the 40b hex version of the binary data. Both the third and fourth rows may be used to program pattern generators.

--`,,```,,,,````-`-`,,`,,`,`,,`---

Copyright International Organization for Standardization
Provided by IHS under license with ISO
No reproduction or networking permitted without license from IHS Not for Resale

As for running disparity, the value is indicated at the beginning and end of each word.

Table A.2 - Low-frequency pattern

+	D11.5 (ab)			D11.5 (ab)		D11.5 (ab)			D11.5 (ab)		+
	14b			14b		14b			14b		
	1101	0010	1011	0100	1010	1101	0010	1011	0100	1010	
	d	2	b	4	a	d	2	b	4	a	
	Byte = D11.5 is repeated > 12 times.										
+	D11.7(eb)			D20.2 (54)		D20.2 (54)			D20.2 (54)		-
	04b			2b4		2b4			2b4		
	1101	0010	0000	1011	0101	0010	1101	0100	1011	0101	
	d	2	0	b	5	2	d	4	b	5	
	Byte = D20.2 is repeated > 12 times.										
-	D20.2 (54)			D20.7 (f4)		D11.5 (ab)			D11.5 (ab)		+
	2b4			3b4		14b			14b		
	0010	1101	0100	1011	0111	1101	0010	1011	0100	1010	
	2	d	4	b	7	d	2	b	4	a	

A.1.3 Low-transition density patterns

A.1.3.1 Overview

The code with the restrictions imposed by the FC standard cannot generate contiguous runs of 5 bits with the same value. For data characters, a maximum of 5 contiguous runs of 4 are possible, starting with bit ‘g’ of a coded byte. For positive starting disparity, the sequence is generated by (D14.7, D30.7, D7.6) and ends with negative disparity. For reverse polarities the sequence is (D17.7, D30.7, D7.1). It is recommended to include both versions.

The lowest transition density that may be maintained indefinitely is 3 per byte starting with the bit ‘b’ or ‘i’ with run lengths of 433433433... The data pattern for the run of 4 starting with bit ‘b’ is (m x D30.3), for either starting polarity, where m may be any integer number of 2 or greater. For the run of 4 to start with bit ‘i’, the pattern is generated by (D28.7, D3.7) when starting with positive disparity and by (D3.7, D28.7) when starting with negative disparity.

To just measure jitter and amplitude distortion from this source, a short sequence should be sufficient. A suitable test pattern for both of these patterns is (D14.7, D30.7, D7.1, m x D30.3). Table A.3 shows this pattern.

Copyright International Organization for Standardization
Provided by IHS under license with ISO
No reproduction or networking permitted without license from IHS Not for Resale

Table A.3 - Low-transition density pattern

D14.7 (ee)			D30.7 (fe)		D7.6 (c7)		D17.7 (f1)		
04e			21e		187		3b1		
0111	0010	0001	1110	0001	1110	0001	1010	0011	0111
7	2	1	e	1	e	1	a	3	7
D30.7 (fe)			D7.1 (27)		D30.3 (7e)		D30.3 (7e)		
1e1			278		0e1		31e		
1000	0111	1000	0111	1001	1000	0111	0001	1110	0011
8	7	8	7	9	8	7	1	e	3
D30.3 (7e)			D30.3 (7e)		D30.3 (7e)		D30.3 (7e)		
0e1			31e		0e1		31e		
1000	0111	0001	1110	0011	1000	0111	0001	1110	0011
8	7	1	e	3	8	7	1	e	3
Byte = D30.3 is repeated > 2 times									
D28.7 (fc)			D3.7 (e3)		D28.7 (fc)		D3.7 (e3)		
21c			1e3		21c		1e3		
0011	1000	0111	0001	1110	0011	1000	0111	0001	1110
3	8	7	1	e	3	8	7	1	e

A.1.3.2 Half-rate and quarter-rate square patterns

The half rate square pattern (contiguous runs of 1010 ...) may be generated by (q x D21.5) that starts with a one, or by (q x D10.2) that starts with a zero. Sequences using D21.5 followed by some slower pattern such as the quarter-rate square wave and then followed by a sequence of D10.2 and then again by a low transition pattern should be used to test circuit asymmetries.

For the quarter rate square pattern contiguous runs of two ones (00110011...) in phase with the byte boundaries may be generated by (p x D24.3), independent of the starting disparity. If p is an even number, the starting and ending disparity remain unchanged. The sequence [q x (D25.6, D6.1)], or [q x (D6.1, D25.6)] generate identical waveforms with a phase shift of 1 Bd interval, also independent of the starting disparity. D6.1 starts with a single zero bit and D25.6 starts with a single one bit.

Table A.4 contains both the half-rate and quarter-rate patterns.

Copyright International Organization for Standardization
Provided by IHS under license with ISO
No reproduction or networking permitted without license from IHS Not for Resale

Table A.4 - Half-rate and quarter-rate patterns - see text

D21.5 (b5)				D21.5 (b5)				D21.5 (b5)	
155				155				155	
1010	1010	1010	1010	1010	1010	1010	1010	1010	1010
a	a	a	a	a	a	a	a	a	a
Byte = D21.5 is repeated q times									
D24.3 (78)				D24.3 (78)				D24.3 (78)	
0cc				333				0cc	
0011	0011	0011	0011	0011	0011	0011	0011	0011	0011
3	3	3	3	3	3	3	3	3	3
Byte = D24.3 is repeated q times									
D10.2 (4a)				D10.2 (4a)				D10.2 (4a)	
2aa				2aa				2aa	
0101	0101	0101	0101	0101	0101	0101	0101	0101	0101
5	5	5	5	5	5	5	5	5	5
Byte = D10.2 is repeated q times									
D25.6 (d9)				D6.1 (26)				D25.6 (d9)	
199				266				199	
1001	1001	1001	1001	1001	1001	1001	1001	1001	1001
9	9	9	9	9	9	9	9	9	9
Byte = D25.6, D6.1 is repeated q times									
D6.1 (26)				D25.6 (d9)				D6.1 (26)	
266				199				266	
0110	0110	0110	0110	0110	0110	0110	0110	0110	0110
6	6	6	6	6	6	6	6	6	6
Byte = D6.1, D25.6 is repeated q times									

A.1.3.3 Ten contiguous runs of 3

Starting and ending with a positive disparity, the data pattern (D14.7, D7.7, D28.3, D17.1) generates ten contiguous runs of 3 starting in bit ‘g’ of the first byte. Similarly, the pattern (D17.7, D7.7, D3.3, D14.6), starting and ending with negative disparity also generates 10 contiguous runs of 3. Both sequences may be repeated as many times as desired.

--`,,```,,,,````-`-`,,`,,`,`,,`---

Copyright International Organization for Standardization
Provided by IHS under license with ISO
No reproduction or networking permitted without license from IHS Not for Resale

Table A.5 - Ten runs of 3 assuming positive disparity

+	D14.7 (ee)		D7.7 (e7)			D28.3 (7c)		D17.1 (31)		+/-
	04e		1c7			31c		271		
	0001	0010	0011	1000	1110	0011	1000	1110	0011	1001
	7	2	c	8	e	3	8	e	3	9
	Repeated q times									

-or-

Table A.6 - Ten runs of 3 assuming negative disparity

-	D17.7 (f1)		D7.7 (e7)			D3.3 (63)		D14.6 (ce)		-/+
	3b1		238			0e3		18e		
	1000	1101	1100	0111	0001	1100	0111	0001	1100	0110
	8	d	c	7	1	c	7	1	c	6
	Repeated q times									

A.1.4 Composite patterns

For the measurement of jitter at various points of the link, patterns should combine low-frequency, low transition density and high-transition density patterns. All but the low-frequency pattern may be kept short for measurements of the jitter. The low-frequency pattern needs to be longer so that lower frequency jitter is included. By including all of the patterns, the resulting composite pattern stresses components within the link with low- and high frequency jitter, asymmetrics, amplitude distortions and low- and high-transition densities. Moreover, composite patterns should be used for specification compliance testing. Examples of composite patterns are discussed in subsequent subclauses within this annex.

A.2 Compliant jitter test bit sequences

A.2.1 Introduction

The test methods specified in the FC-PH standard consist of using K28.5 and K28.7 sequences for DJ and RJ respectively. The K28.5 test sequence consists of the highest frequency and lowest frequency components (run length of 5 and run length of 1) in a concise 20 bit sequence if both disparities are used. The K28.7 has no data dependent components and is in essence a square wave with frequency of one tenth the signalling rate expressed in baud.

In addition to the test sequences already defined in the FC-PH standard, the following test bit sequences are defined for both jitter output and tolerance testing:

RPAT	Random data pattern - subclause A.2.2.3
CRPAT	Compliant random data pattern in a valid FC frame - subclause A.2.2.4
JTPAT	Jitter tolerance test pattern - subclause A.2.3.2
CJTPAT	Compliant jitter tolerance pattern in a valid FC frame - subclause A.2.3.3
SPAT	Supply noise test sequence for maximum SSO noise for transceivers - subclause A.2.4.2

Copyright International Organization for Standardization
Provided by IHS under license with ISO
No reproduction or networking permitted without license from IHS Not for Resale

CSPAT Supply noise test sequence in a valid FC frame - subclause A.2.4.3

In their respective subclauses, the original rationale for their application are given. However, for compliance testing of a particular device, the pattern(s) that produce(s) the worse case output or tolerance results shall be used. **Determining the pattern that produces the worst results is done only by experimentation.**

A.2.2 Random test bit sequence

A.2.2.1 Overview

The intent of the random test pattern is to provide a data pattern with broad spectral content and minimal peaking that may be used for component and system level (FC-AL type) architectures for the measurement of jitter output. The development of this pattern is specific to FC Tx jitter testing and provides to both component and system vendors a common data pattern use when performing Tx jitter measurements. A flat spectral content pattern is used to insure that any peaking seen during Tx jitter testing may be attributed to the component and not the spectral content of the data.

Given the broad (white) spectral content of the RPAT test pattern, this may also be used as an industry standard for EMI testing bounded by IDLEs or ARBs. However, be aware that RPAT may not be an appropriate pattern for EMI agency compliance. The equipment supplier is responsible for determining the testing for all reasonably likely patterns, configurations, and conditions. For example, FC traffic frequently consists of sustained runs of IDLEs, that typically may be much more challenging for EMI agency compliance.

A.2.2.2 Background - Fibre Channel frame

For test bit sequences to be carried on active FC links the test bit sequences need to be embedded into the constructs of link traffic. These constructs include fill words and FC frames (see table A.7). Between frames, a FC link is filled with primitive sequences such as IDLEs, R_RDYs, ARBs, etc. as required by the Fibre Channel protocol. At the N Port transmitter, Fibre Channel requires a minimum of six primitive sequences between frames.

There are eight different SOF delimiter functions, all assume negative disparity. Two are used for Class 3.

Table A.7 - Fibre Channel frame

Name	SOF	Header	Payload	CRC	EOF
Bytes	4	24	0 to 2112	4	4

The SOFi3 would only be used once when sending data and all subsequent SOFs are SOFn3. There are six EOF delimiter functions of either positive or negative disparity. The disparity of the EOF is determined by the value of the CRC. The CRC is determined by the contents of the header and payload. Valid SOF's and EOF's used with patterns in this annex are shown in table A.8

.

Table A.8 - Valid fibre channel frame delimiters

Delimiter and Function	Beginning Disparity	Ordered Set
SOFn3	Negative	K28.5 D21.5 D22.1 D22.1
EOFn	Negative	K28.5 D21.4 D21.6 D21.6
EOFn	Positive	K28.5 D21.5 D21.6 D21.6

Copyright International Organization for Standardization
Provided by IHS under license with ISO
No reproduction or networking permitted without license from IHS Not for Resale

A.2.2.3 Original RPAT

The original RPAT data pattern is designed specifically to provide a broad/flat frequency spectrum. RPAT's data codes are valid 8b/10b codes but are not FC compliant as a data payload due to character placement and disparity conflicts. The "10b" code represents the 10b encoded data bytes. The "10b hex" is the hex representation of the 10b encoded data. The RPAT pattern assumes negative running disparity.

8b: BC, BC, 23, 47, 6B, 8F, B3, D7, FB, 14, 36, 59

10b: k28.5, k28.5, D3.1, D7.2, D11.3, D15.4, D19.5, D23.6, D27.7, D20.0, D22.1, D25.2

10b hex: 3EB0 5C67 85D3 172C A856 D84B B6A6 65

NOTE The next to last character in the 10b definition has been changed from D21.1 in MJS to D22.1 in MJSQ to be consistent with the code mappings for 8b and 10b hex.

A.2.2.4 Compliant RPAT (CRPAT)

Since most host adapters include Fibre Channel state machines, they cannot be made to transmit the original RPAT. What is needed to use a host adapter is a test bit sequence that complies with all Fibre Channel rules, specifically the frame construct. To generate an FC compliant RPAT (CRPAT) while attempting to maintain the flat spectrum characteristics of the original RPAT data pattern, some modifications are required. Modifications to the original RPAT include

Removal of two consecutive K28.5 codes at the beginning of RPAT,
Replacing K28.5s with D30.2 and D30.5,
Re-arrangement of the data codes required to maintain disparity balance.

The modified RPAT is:

8b: BE, D7, 23, 47, 6B, 8F, B3, 14, 5E, FB, 35, 59

10b: D30.5, D23.6, D3.1, D7.2, D11.3, D15.4, D19.5, D20.0, D30.2, D27.7, D21.1, D25.2

10b hex: 86BA, 6C64, 75D0, E8DC, A8B4, 7949, EAA6, 65

This is shown in the RPAT section of table A.9.

The header for this purpose may be considered the same as the payload since all that is desired is that the host adapter transmit the data or the disk drive re-transmit the data. The payload consists of the modified RPAT repeated 16 times. Each frame is preceded or followed by six idle primitives.

The CRPAT pattern is specifically designed to have a broad spectrum that produces a worst case scenario with regard to deterministic jitter generation. By embedding the payload with 16 repeating modified RPATs, the spectral contribution of the SOF, CRC, EOF and idle primitives may be minimized.

The FFT, in figure A.2, is for the 10b hex data as a pure 1s and 0s data stream. Figure A.3 is the FFT of the FC compliant RPAT (including the idles and SOF). The spectral content is fairly broad and flat, much like the original RPAT. Moreover, the spectrum analysis of both the original RPAT and the FC Compliant RPAT are almost equivalent. The FC compliant RPAT patterns shows some peaking near 100 MHz, but this should be insignificant.

Rise times are not accounted for and assumed perfect.

For overall jitter tolerance testing both the CJTPAT and the above CRPAT should be used.

Copyright International Organization for Standardization
Provided by IHS under license with ISO
No reproduction or networking permitted without license from IHS Not for Resale

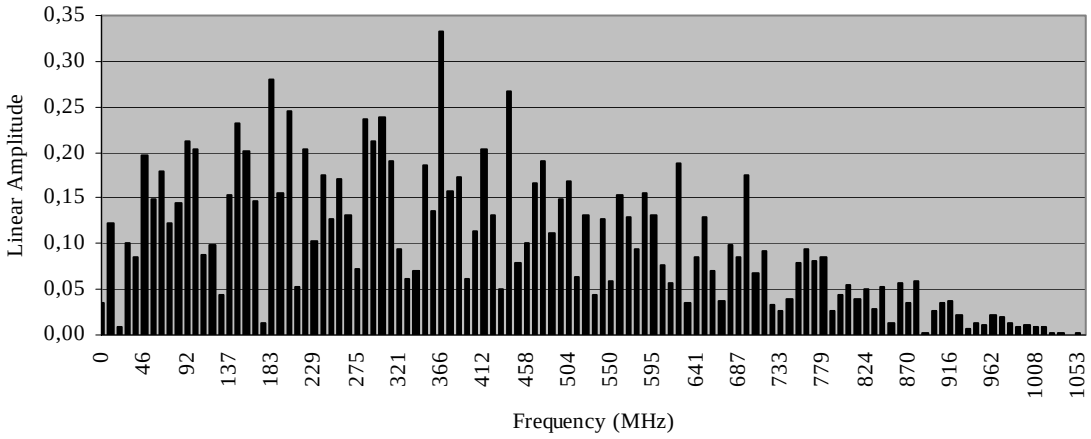

Figure A.2 - FFT of original RPAT

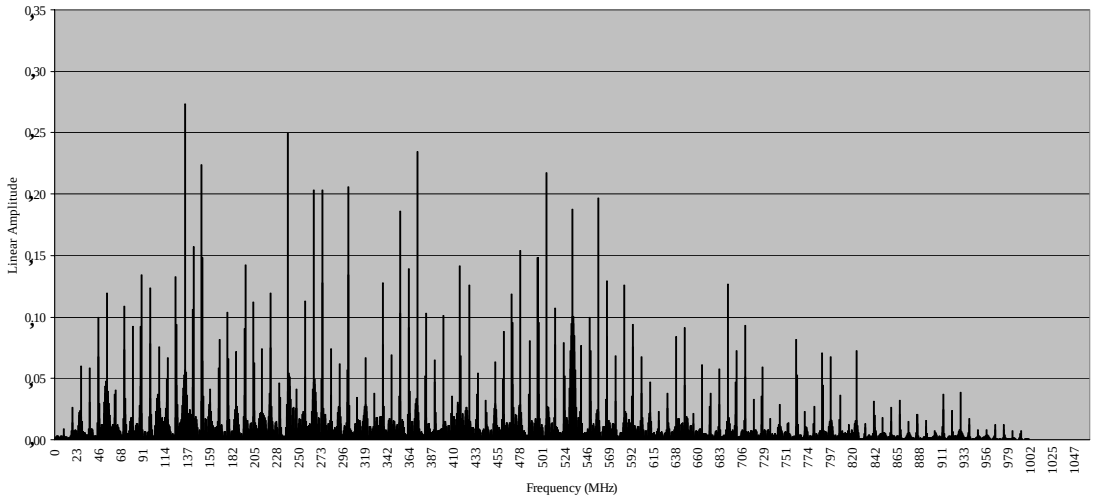

Figure A.3 - FFT of compliant RPAT

The pattern in table A.9 represents the CRPAT. It consists of six idle primitives, an SOF, the RPAT pattern repeated 16 times, a CRC and a EOF. A repeating CRPAT may be used at all levels of development including system and component design.

--`,,```,,,,````-`-`,,`,,`,`,,`---

Copyright International Organization for Standardization
Provided by IHS under license with ISO
No reproduction or networking permitted without license from IHS
Not for Resale

Table A.9 - CRPAT test bit sequence

-	K28.5 (bc)		D21.4 (95)			D21.5 (b5)			D21.5 (b5)		-
	17c		115			155			155		
	0011	1110	1010	1010	0010	1010	1010	1010	1010	1010	
	3	e	a	a	2	a	a	a	a	a	

Idle Primitive (repeated 6 times)

Above Idle Primitive is repeated 6 times

-	K28.5 (bc)		D21.5 (b5)			D22.1 (36)			D22.1 (36)		+
	17c		155			256			256		
	0011	1110	1010	1010	1010	0110	1010	0101	1010	1001	
	3	e	a	a	a	6	a	5	a	9	

Start of Frame: Class 3 normal (SOFn3)

+	D30.5 (be)		D23.6 (d7)			D3.1 (23)			D7.2 (47)		+
	161		197			263			2b8		
	1000	0110	1011	1010	0110	1100	0110	0100	0111	0101	
	8	6	b	a	6	c	6	4	7	5	

+	D11.3 (6b)		D15.4 (8f)			D19.5 (b3)			D20.0 (14)		–
	30b		2c5			153			0b4		
	1101	0000	1110	1000	1101	1100	1010	1000	1011	0100	
	d	0	e	8	d	c	a	8	b	4	

modified RPAT pattern (repeated 16 times)

-	D30.2 (5e)		D27.7 (fb)			D21.1 (35)			D25.2 (59)		+
	29e		1e4			255			299		
	0111	1001	0100	1001	1110	1010	1010	0110	0110	0101	
	7	9	4	9	e	a	a	6	6	5	

Above 12 byte modified RPAT pattern is repeated 16 times

+	D14.7 (ee)		D3.1 (23)			D21.2 (55)			D22.0 (16)		+
	04e		263			295			356		
	0111	0010	0011	0001	1001	1010	1001	0101	1010	1011	
	7	2	3	1	9	a	9	5	a	b	

CRC:

Copyright International Organization for Standardization
Provided by IHS under license with ISO
No reproduction or networking permitted without license from IHS Not for Resale

Table A.9 - CRPAT test bit sequence (Continued)

	K28.5 (bc)		D21.5 (b5)			D21.6 (d5)			D21.6 (d5)		
	283		155			195			195		
+	1100	0001	0110	1010	1010	1010	1001	1010	1010	0110	–
	c	1	6	a	a	a	9	a	a	6	

End of Frame: (EOFn)

A.2.3 Compliant receive jitter test bit sequences

A.2.3.1 Overview

For jitter tolerance testing, the data pattern exposes a receiver's CDR to large instantaneous phase jumps. To do this, the overall pattern should alternate repeating low-transition density patterns with repeating high-transition density patterns. The repeating 10b character durations should be longer than the time constants in the receiver clock recovery circuit. This assures that the clock phase has followed the systematic pattern jitter and the data sampling circuitry is exposed to large systematic phase jumps. This stresses the timing margins in the received eye. The following test bit sequences are suggested for receive jitter tolerance testing:

JTPATJitter tolerance pattern used to test receivers;

CJTPATJitter tolerance pattern in a valid FC frame.

A.2.3.2 Receive jitter tolerance pattern - JTPAT

Table A.10 shows how low- and high-density patterns may be used. Here, the low-density pattern is a repeating D30.3 and the high density pattern is a repeating D21.5. Using these two patterns together tests the systematic pattern jitter causing phase jumps. The run length of these two patterns are related to the time constants of the PLL. For the JTPAT the following assumptions were made:

a) average FC traffic transition density is approximately 50 %,
b) CDR time constant is inversely proportional to transition density,
c) to obtain at least 95 % settling a pattern duration needs to be greater than 3 time constants,
d) the PLL's minimum bandwidth for FC transceivers is baud/166 7 at the average transition density.

100 10 bit characters at 50 % transition density meets these assumptions. The repeating D21.5 has a 100 % transition density and the repeating 30.3 has a 30 % transition density. Because of the above assumptions, the duration of the high-transition density pattern needs to be at least 50 10 bit characters. As for the low transition density pattern, it needs to be at least 167 10-bit characters.

Copyright International Organization for Standardization
Provided by IHS under license with ISO
No reproduction or networking permitted without license from IHS Not for Resale

Table A.10 - JTPAT

D30.3 (7e)			D30.3 (7e)		D30.3 (7e)			D30.3 (7e)		
0e1			31e		0e1			31e		
1000	0111	0001	1110	0011	1000	0111	0001	1110	0011	-
8	7	1	e	3	8	7	1	e	3	
Byte = D30.3 is repeated > 167 times										
D21.5 (b5)			D21.5 (b5)		D21.5 (b5)			D21.5 (b5)		
155			155		155			155		
1010	1010	1010	1010	1010	1010	1010	1010	1010	1010	-
a	a	a	a	a	a	a	a	a	a	
Byte = D21.5 is repeated > 50 times										

A.2.3.3 Compliant receive jitter tolerance pattern - CJTPAT

Creating a compliant receive jitter tolerance pattern (CJTPAT) requires adding SOF, CRC, EOF and Idles. In order to use the above JTPAT more fully, each of the possible phase shifts introduced has two polarity versions. That is, a phase change may start with a 0 and transition to a 1 or vice versa. Additional characters have been added to produce both polarity changes for each phase shift. Table A.11 shows the resulting CJTPAT. For overall jitter tolerance testing both the CJTPAT and the above CRPAT should be used.

Table A.11 - CJTPAT

K28.5 (bc)			D21.4 (95)		D21.5 (b5)			D21.5 (b5)		
17c			115		155			155		
0011	1110	1010	1010	0010	1010	1010	1010	1010	1010	-
3	e	a	a	2	a	a	a	a	a	
Above Idle Primitive is repeated 6 times										
K28.5 (bc)			D21.5 (b5)		D22.1 (36)			D22.1 (36)		
17c			155		256			256		
0011	1110	1010	1010	1010	0110	1010	0101	1010	1001	+
3	e	a	a	a	6	a	5	a	9	

Idle primitive (repeated 6 times)

SOFn3

Copyright International Organization for Standardization
Provided by IHS under license with ISO
No reproduction or networking permitted without license from IHS Not for Resale

Table A.11 - CJTPAT (Continued)

	D30.3 (7e)		D30.3 (7e)			D30.3 (7e)		D30.3 (7e)			
	0e1		31e			0e1		31e			
+	1000	0111	0001	1110	0011	1000	0111	0001	1110	0011	**Low-density transition pattern**
	8	7	1	e	3	8	7	1	e	3	
	Above 4 byte pattern is repeated 41 times.										
	D30.3 (7e)		D30.3 (7e)			D30.3 (7e)		D20.3 (74)			
	0e1		31e			0e1		0f4			
+	1000	0111	0001	1110	0011	1000	0111	0000	1011	1100	**Transferring from low- to high-transition densities**
	8	7	1	e	3	8	7	0	b	c	
	D30.3 (7e)		D11.5 (ab)			D21.5 (b5)		D21.5 (b5)			
	31e		14b			155		155			
-	0111	1000	1111	0100	1010	1010	1010	1010	1010	1010	+
	7	8	f	4	a	a	a	a	a	a	
	D21.5 (b5)		D21.5 (b5)			D21.5 (b5)		D21.5 (b5)			
	155		155			155		155			
+	1010	1010	1010	1010	1010	1010	1010	1010	1010	1010	+ **High-density transition pattern**
	a	a	a	a	a	a	a	a	a	a	
	Above 4 byte pattern is repeated 12 times										
	D21.5 (b5)		D30.2 (5e)			D10.2 (4a)		D30.3 (7e)			
	155		2a1			2aa		31e			
+	1010	1010	1010	0001	0101	0101	0101	0101	1110	0011	+
	a	a	a	1	5	5	5	5	e	3	**Transferring from high- to low-transition densities**
	D30.3 (7e)		D30.3 (7e)			D30.3 (7e)		D30.7 (fe)			
	0e1		31e			0e1		21e			
+	1000	0111	0001	1110	0011	1000	0111	0001	1110	0001	-
	8	7	1	e	3	8	7	1	e	1	

Copyright International Organization for Standardization
Provided by IHS under license with ISO
No reproduction or networking permitted without license from IHS Not for Resale

Table A.11 - CJTPAT (Continued)

-	D21.7 (f5)		D14.1 (2e)			D22.7 (f6)		D29.6 (dd)			+
	1d5		24e			216		19d			
	1010	1011	1001	1100	1001	0110	1000	0110	1110	0110	
	a	b	9	c	9	6	8	6	e	6	
+	k28.5 (bc)		D21.5 (b5)			D21.6 (d5)		D21.6 (d5)			-
	283		155			195		195			
	1100	0001	0110	1010	1010	1010	1001	1010	1010	0110	
	c	1	6	a	a	a	9	a	a	6	

CRC

EOFn

A.2.4 Supply noise test bit sequences

A.2.4.1 Overview

It has been found that a test bit sequence of repeating D31.3 characters creates the worst-case power supply noise introduced by a transceiver. The noise is caused by the maximum simultaneously switching output (SSO). The following test bit sequences are proposed for SSO noise testing:

SPAT Supply noise data pattern causing maximum SSO noise for transceivers;

CSPAT Supply noise data pattern in a valid FC frame.

A.2.4.2 Supply noise pattern - SPAT

The pattern in table A.12 represents the SPAT. It is a test bit sequence that creates the SSO noise by causing all the individual Tx and Rx parallel data lines to switch per 10 bit character. This imortance of this pattern may be very dependent on the details of the system design.

Table A.12 - Supply noise test bit sequence

-	D31.3 (7f)				D31.3 (7f)					-
	335				0ca					
	1010	1100	1101	0100	1100	1010	1100	1101	0100	1100
	a	c	d	4	c	a	c	d	4	c
	Above 4 byte pattern is repeated 512 times									

A.2.4.3 Compliant supply noise pattern - CSPAT

Just as the RPAT bit sequence may be packaged into a Fibre Channel frame for use in an operating system level test, the SPAT may be surrounded by SOF, CRC, and EOF to create a compliant SPAT (CSPAT).

--`,,```,,,,````-`-`,,`,,`,`,,`---

Copyright International Organization for Standardization
Provided by IHS under license with ISO
No reproduction or networking permitted without license from IHS Not for Resale

Table A.13 - Compliant supply noise test bit sequence

-	K28.5 (bc)		D21.4 (95)			D21.5 (b5)			D21.5 (b5)		- **Idle Primitive**
	17c		115			155			155		
	0011	1110	1010	1010	0010	1010	1010	1010	1010	1010	
	3	e	a	a	2	a	a	a	a	a	
	Above Idle Primitive is repeated 6 times										
-	K28.5 (bc)		D21.5 (b5)			D22.1 (36)			D22.1 (36)		+ **SOFn3**
	17c		155			256			256		
	0011	1110	1010	1010	1010	0110	1010	0101	1010	1001	
	3	e	a	a	a	6	a	5	a	9	
+	D31.3 (7f)		D31.3 (7f)			D31.3 (7f)			D31.3 (7f)		+ Supply Noise Pattern (q = 512)
	0ca		335			0ca			335		
	0101	0011	0010	1011	0011	0101	0011	0010	1011	0011	
	5	3	2	b	3	5	3	2	b	3	
	Above 4 byte Supply Noise pattern is repeated 512 times										
+	D17.7 (f1)		D22.4 (96)			D27.6 (db)			D23.4 (97)		- CRC:
	231		2d6			1a4			117		
	1000	1100	0101	1010	1101	0010	0101	1011	1010	0010	
	8	c	5	a	d	2	5	b	a	2	
-	K28.5 (bc)		D21.4			D21.6 (d5)			D21.6 (d5)		- **EOFn**
	17c		115			195			195		
	0011	1110	1010	1010	0010	1010	1001	1010	1010	0110	
	3	e	a	a	2	a	9	a	a	6	

A.3 Practical issues with compliant patterns in operating FC systems

CRPAT, CJTPAT and CSPAT as defined in this report, include complete FC compliant frames and surrounding idles that are intended to represent conditions in operating FC systems. as well as for characterizing components and TxRx connections. In an operating FC system the idles, SOF and headers may be added by the port. In these cases the patterns defined should not include the idles, SOF and headers. Because the bit patterns are critical to the use of the patterns the disparity coming into the payload shall remain as specified with the header defined in this document. This requirement may present challenges in operating systems, especially where the addresses are changing from frame to frame. Making measurements in operating systems may present other challenges:

a) It may be necessary to modify the frame header plus CRC. If changing the header is required, attempt to do so in a manner that does not change the running disparity coming into the payload. The disparity going into the EOF is positive for CJTPAT and CRPAT.
b) Error measurements shall allow for normal changes to bits outside the Test Bit Sequence.

--`,,```,,,,````-`-`,,`,,`,`,,`---

Copyright International Organization for Standardization
Provided by IHS under license with ISO
No reproduction or networking permitted without license from IHS Not for Resale

c) If bits other than the specified test pattern occupy a significant fraction of the total test time, they may dilute the test and affect the jitter output or tolerance and/or increase the test time.

Copyright International Organization for Standardization
Provided by IHS under license with ISO
No reproduction or networking permitted without license from IHS Not for Resale

Annex B
(informative)

Practical measurements

B.1 Introduction

This annex gives guidance on methodologies to be used for gaining practical measurement access to Fibre Channel components during testing. This annex contains mostly the idealized methods and may not completely describe the construction or transfer functions of real hardware. A more detailed description of the design of tests and the requirements on implementing the physical design of the interface adapters called out here will be in future technical reports on FC copper or in future technical reports on jitter. The information herein is based on that supplied by the contributors to this technical report up to the publication date. New information is continually becoming available as Fibre Channel and other serial data transmission technologies mature.

This annex is needed because it is very easy to acquire data that looks reasonable but is really seriously in error because of improper measurement techniques. Without using the schemes in this annex, it is likely that independently executed measurements on the same unit will not yield the same results.

B.2 Basic architecture

The basic architecture of the practical measurements for Fibre Channel jitter uses a signal source, a signal sink, and interconnect that connects the source to the sink. Signals always flow from source to sink through the interconnect. See figure A.1. One part of the test configuration is always a unit or device under test and the other parts enable the instrumentation to accurately indicate the properties of the signals at the connector(s) of the device under test. The unit under test may be a source, a sink or interconnect. The instrumentation may be a source, a sink, an interconnect or a combination thereof.

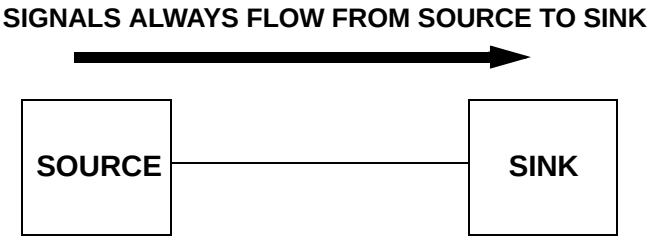

Figure B.1 - Ideal test configuration architecture

The most fundamental requirement is to accurately determine the properties of the signals at the connectors of the device under test at the same time the device under test is responding to, carrying or generating the signals.

There are two kinds of source (choose one per test configuration):

a) Test signal instrumentation
b) FC TX port under test

Interconnect falls into five categories (choose at least one per test configuration and specify order of connection):

a) FC passive (bulk cables, connectors, etc.) under test;

--`,,```,,,,````-`-`,,`,,`,`,,`---

Copyright International Organization for Standardization
Provided by IHS under license with ISO
No reproduction or networking permitted without license from IHS Not for Resale

b) FC active (repeaters, port bypass circuits...) under test;
c) instrumentation quality cable asemblies;
d) FC cable assemblies used for generating ISI;
e) FC “tap adapter”.

There are two kinds of sink (choose one per test configuration):

a) Test signal instrumentation;
b) FC RX port under test.

Each test configuration is an ordered list where the source, interconnect components (including order), and sink are called out. Subclause A.3.5 describes how to assemble these lists. Before this may be effectively done one needs to define a means for connecting practical instrumentation into the Fibre Channel system.

B.3 Instrumentation interface adapters

B.3.1 Overview

Practical instrumentation shall interface to the Fibre Channel components with minimal disruption to Fibre Channel components. The instrumentation shall have the input and output environment it needs to operate properly as an instrument. Adapting interfaces are used unless the instrumentation happens to have exactly the right Fibre Channel variant interface. Most existing instrumentation inputs and outputs do not use the Fibre Channel transmission environment.

Figure A.2 shows three basic ways to use adapting interfaces:

a) source adapter, where DUT is a source and FC frames may not be required as traffic;
b) sink adapter, where DUT is a sink and FC frames are not required as traffic;
c) tap adapter, where a FC port is the DUT, real FC frames may be required for traffic and the instrumentation is a secondary sink; either the source FC port or the sink FC port may be the DUT.

The measured signals at the instrumentation represent the signals that exist at the DUT connector when modified by the transfer functions of the interface adapter and the interconnect.

There are several kinds of interconnect specified in Fibre Channel (termed “variants”) and each needs its own kind of interface adapter. The remainder of annex describes these adapters for the balanced copper, the unbalanced copper, and the optical variants.

The specification for these interface adapters does not include the specific connectors, printed circuit board material, connector attachment designs, trace widths or any other physical design details. The losses and disturbances caused by any specific implementation shall be added to those caused by the basic adapter itself when determining the actual interface adapter transfer function for specific applications.

It is strongly recommended that efforts be made to use the best materials and design practices when constructing an interface adapter so that the intrinsic simplicity of the circuits may be realized in the actual measurements. For example, low-inductance and low-capacitance resistors should be used.

The amplitude transfer characteristics of the adapters that are given in this Annex may be converted to power if desired. The load impedance of the measurement equipment may be different from that of the unit under test that affects the power conversion calculation.

Although not shown explicitly in this annex, all FC sources and sinks should be d.c. blocked to prevent test adapters from disturbing the required bias points.

Copyright International Organization for Standardization
Provided by IHS under license with ISO
No reproduction or networking permitted without license from IHS Not for Resale

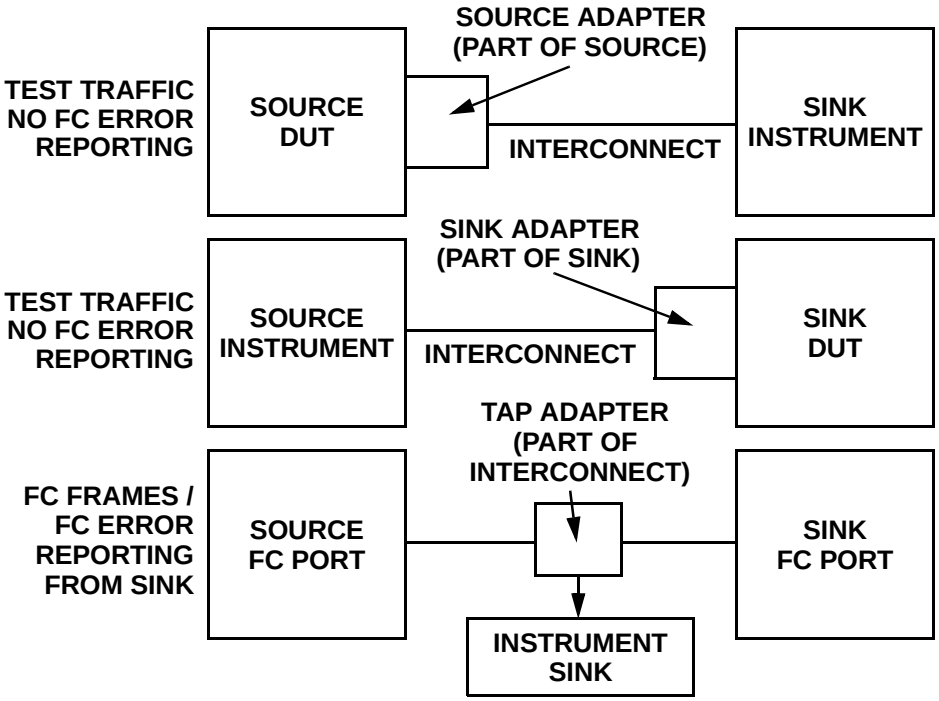

Figure B.2 - Placement of adapters in test configurations

B.3.2 Balanced copper

B.3.2.1 Introduction

Balanced copper Fibre Channel variants have either nominal 100 Ω or 150 Ω balanced differential transmission environments. This annex only documents the 150 Ω variants. Some adapters are not required for the 100 Ω variants. Other 100 Ω adapters may be simpler that the 150 Ω counterparts.

Almost all existing high-speed electronic test equipment presents unbalanced inputs and outputs at a 50 Ω impedance. Therefore these interface adapters are coupling or matching networks that have balanced 150 Ω differential characteristics where attached to the FC components and 50 Ω unbalanced single-ended characteristics where attached to test instruments.

The entire electrical path between the interface adapter components (resistors, balun contacts, etc.) and the FC interconnect connection shall have the characteristic impedance of the side of the interface adapter where it is connecting. This includes all printed circuit traces, all connectors and all cables. Components attached to any part of the electrical paths other than those specified could upset the signal flow. This includes oscilloscope probes[1], coupling capacitors and ESD devices attached to the test electrical path. (Coupling capacitors and ESD devices may exist as part of the DUT and contribute to the DUT's performance.) These restrictions are necessary to avoid disturbing the transmission line properties of the connections, thus obscuring what is to be measured.

1. Special 10x 500 Ω oscilloscope probes exist that add very little capacitance and stubs when probing. These probes have the adaptive element (e.g., a chip pad) right at the "tip". Whereas these probes might be useable in some laboratory applications, they may be difficult to place in the required places on actual devices and components. For these reasons, methods are provided that do not require the use of probes.

Copyright International Organization for Standardization
Provided by IHS under license with ISO
No reproduction or networking permitted without license from IHS Not for Resale

Special care shall be exercised when attaching connectors to bulk cable or printed circuit boards in such a manner that the termination side of the connector and its board or cable connection does not induce any more deviations from the nominal characteristic impedance than is absolutely necessary. This generally means that it is necessary to analyse the use of through holes and trace routing in printed circuit boards carefully.

Special care shall also be exercised to include the signal losses and phase distortion in traces on printed circuit boards and in the real components used when determining the actual transfer function of the interface adapter. This annex shows the ideal transfer functions only and assumes that all ports are terminated in their characteristic impedance.

The interconnect paths shall be no longer than necessary and any interconnect losses shall be included as part of the transfer function of the path between the instrument and the DUT.

Inserting the matching network into the test configuration affects the signals to some degree and also causes some signal loss due to these networks.

B.3.2.2 Source and sink adapters for balanced copper variants

B.3.2.2.1 Balanced - unbalanced

Figure A.3 shows the recommended matching network design for both the source and sink adapters. These adapters depend on the use of special instrumentation-grade baluns described in clause A.3.6.

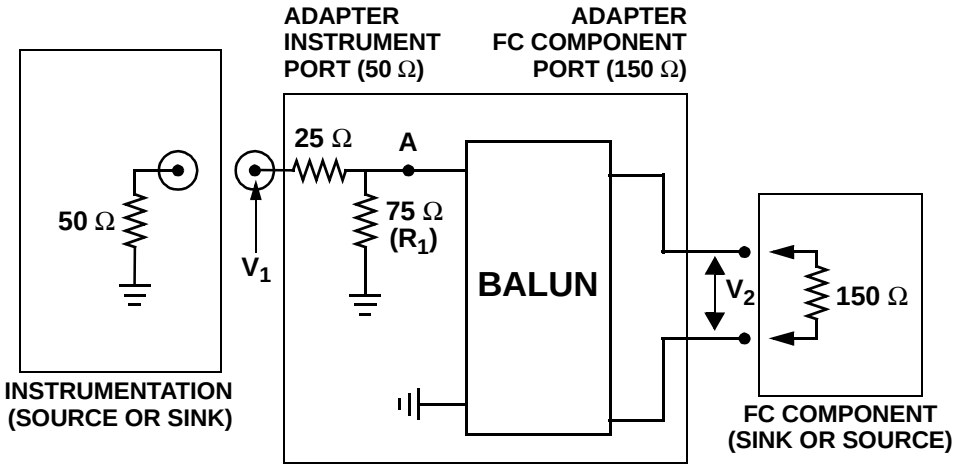

Figure B.3 - Source/sink interface adapter matching network

Copyright International Organization for Standardization
Provided by IHS under license with ISO
No reproduction or networking permitted without license from IHS
Not for Resale

Table B.1 - Ideal transfer function for source/sink adapter matching network of figure B.3

To From	Adapter Instrument Port (150 Ω), (V1) Instrument as sink	Adapter FC Component (150 Ω), (V2) FC Port as sink
Adapter Instrument Port (50 Ω) (V_1), Instrument as source	NA	$V_2 = V_1$
Adapter FC Component Port (150 Ω), (V_2), FC Port as source	$V_1 = 0{,}333 * V_2$	NA

At point “A”, the impedance is 37,5 Ω in both directions. The impedance into V_2 is four times that at point “A”; i.e., 150 Ω.

FC port sources are required to deliver the required signals with passive interconnect impedances ranging from 135 Ω to 165 Ω. There are two ways to accomplish this impedance range.

Preferred: Add a balanced / balanced impedance-adjusting pad network between the FC component and the adapter for each impedance level to be tested.

Alternate: vary the 75 Ω resistor, R_1, such that the parallel combination of 75 Ω (the 25 Ω and the 50 Ω instrumentation resistors) and R_1 is 135/4 and 165/4 respectively. R_1 should be 61,4 Ω for the 135 Ω load. R_1 should be 91,7 Ω for the 165 Ω load. The voltage ratios between V_1 and V_2 are affected by the choice of R_1 and should be adjusted accordingly.

The adapter shown in figure A.3 assumes that the DC path between the source and sink is broken by capacitors within the source, sink or interconnect. If the link is DC-coupled, either the ground offset between the source and sink is maintained at a low level or one or more series capacitors are added to the adapter. See A.3.6.5.

Due to the significantly non-ideal behavior of capacitors at elevated frequencies, it is recommended not to not use capacitors in the adapter unless there is no other option. See A.3.6.5.

B.3.2.2.2 Balanced - balanced (alternative 1)

Figure A.4 shows the recommended matching network design for both the source and sink balanced - balanced copper adapters, as shown in figure A.2. The instrument input is assumed to consist of two unbalanced 50 Ω inputs (100 Ω differential). Comments in A.3.2.2.1 on Balanced - Unbalanced Source and Sink Adapters relating to adjusting impedance over the required ranges apply here with appropriate modifications.

Note that this is not a truly balanced instrumentation since there is no provision for accommodating the common mode levels that may exist on the FC component side. However, where there is negligible common mode present this scheme may be satisfactory.

Copyright International Organization for Standardization
Provided by IHS under license with ISO
No reproduction or networking permitted without license from IHS Not for Resale

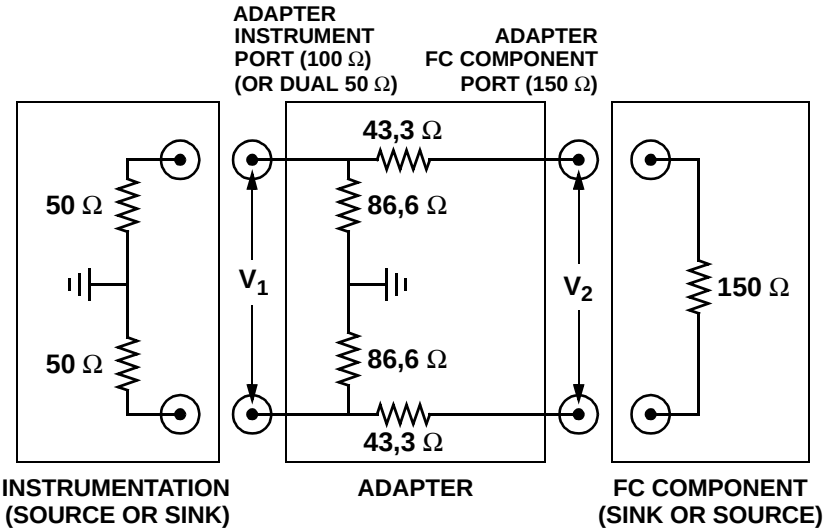

Figure B.4 - Balanced-balanced source-sink adapter (alternative 1)

Table B.2 - Transfer function for alternative 1 balanced - balanced source/sink network of figure B.4

To From	**Adapter Instrument Port** (100 Ω), (V1) **Instrument as sink**	**Adapter FC Component Port** (150 Ω), (V2) **FC Port as sink**
Adapter Instrument Port (100 Ω), (V_1) Instrument as source	NA	$V_2 = 0{,}634 * V_1$
Adapter FC Component Port (150 Ω), (V_2) FC Port as source	$V_1 = 0{,}423 * V_2$	NA

B.3.2.2.3 Balanced - balanced (alternative 2)

When using the special 500 Ω probes (or equivalent circuits designed to minimize any internal reflections) one may sacrifice the impedance matching on the instrument input side in exchange for a simple 10-to-1 transfer function and an equivalent 75 Ω termination on the FC interconnect side. This is achieved by using the configuration shown in Figure A.5 for each side of the balanced line.

Copyright International Organization for Standardization
Provided by IHS under license with ISO
No reproduction or networking permitted without license from IHS
Not for Resale

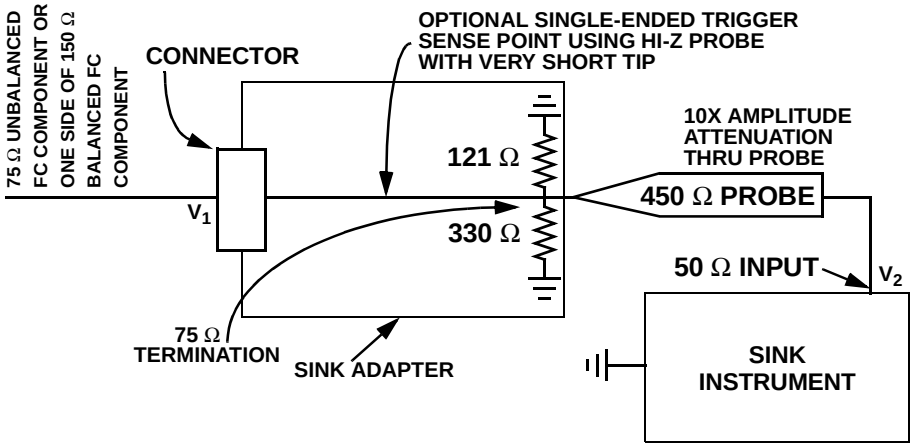

Figure B.5 - Half of balanced-balanced source-sink adapter (alternative 2)

A separate trigger sense point is shown where a high impedance probe with a very short tip could be used to extract a single-ended trigger input for the sink instrument. If used, this probe disturbs the electrical path to some degree and it shall be determined that this disturbance is negligible before using this scheme.

Table B.3 - Transfer function for balanced - balanced source/sink interface network of figure B.5

To **From**	**Adapter Instrument Port** (100 Ω), (V1) **Instrument as sink**	**Adapter FC Component Port** (150 Ω), (V2) **FC Port as sink**
Adapter Instrument Port (100 Ω), (V_1) Instrument as source	NA	$V_2 = 0{,}10 * V_1$
Adapter FC Component Port (150 Ω), (V_2) FC Port as source	NA	NA

B.3.2.3 Tap adapters for balanced copper variants

B.3.2.3.1 Balanced-balanced (alternative 1)

Figure A.6 shows the recommended design for a balanced-balanced tap adapter matching network when used with an instrument that offers a balanced 150 Ω input. Such instruments are not common. This tap adapter may also be used with the source/sink interface adapters shown in figure A.3 and figure A.4 to connect an unbalanced 50 Ω instrument or a balanced 100 Ω instrument respectively. The unbalanced instrument case is discussed in A.3.2.3.3.

Copyright International Organization for Standardization
Provided by IHS under license with ISO
No reproduction or networking permitted without license from IHS
Not for Resale

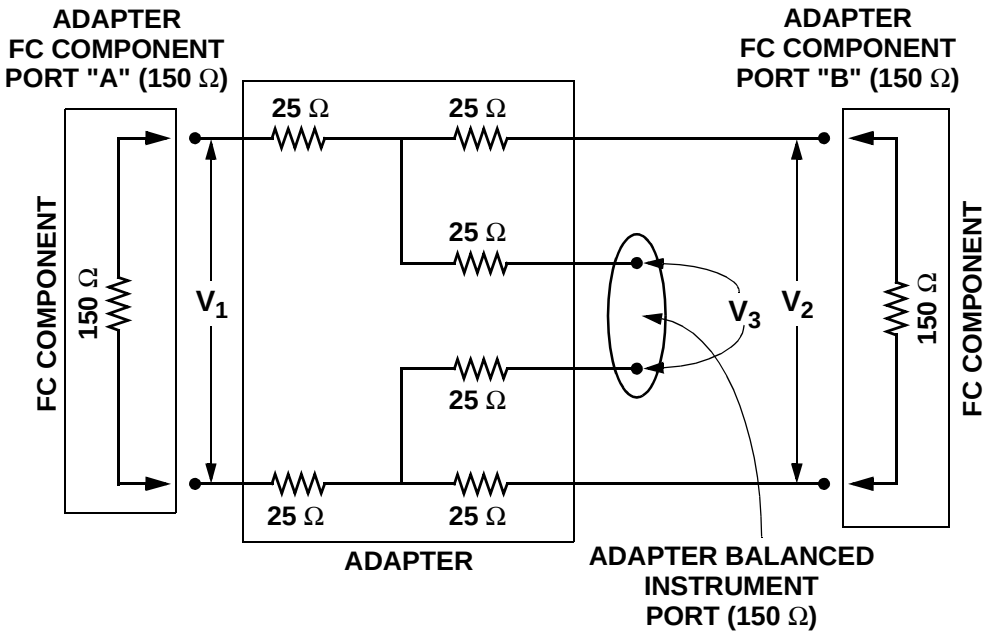

Figure B.6 - Tap adapter matching network (balanced-balanced)

Table B.4 - Transfer function for balanced - balanced tap adapter of figure B.6

To **From**	**Adapter Balanced Port "A"** (150 Ω), (V1) **FC Component as sink**	**Adapter Balanced Port "B"** (150 Ω), (V2) **FC Component as sink**	**Adapter Balanced Instrument Port** (150 Ω), (V3) **Instrument as sink.**
Adapter Balanced Port "A", (150 Ω), (V_1) FC Component as source	NA	$V_2 = 0,5 * V_1$	$V_3 = 0,5 * V_1$ $V_3 = V_2$ (Note 1)
Adapter Balanced Port "B", (150 Ω), (V_2) FC Component as source	$V_1 = 0,5 * V_2$	NA	$V_3 = 0,5 * V_2$ $V_3 = V_1$ (Note 2)
Adapter Balanced Instrument Port (150 Ω), (V_3) Instrument as source (Note 3)	$V_1 = 0,5 * V_3$	$V_2 = 0,5 * V_3$	NA
NOTE 1 Since $V_2 = 0,5 * V_1$ or $V_1 = 2 * V_2$ and $V_3 = 0,5 * V_1 = 0,5 * 2 * V_2 = V_2$ NOTE 2 Since $V_1 = 0,5 * V_2$ or $V_2 = 2 * V_1$ and $V_3 = 0,5 * V_2 = 0,5 * 2 * V_1 = V_1$ NOTE 3 Not normally used in this mode			

Note that, ideally, there is no correction required between the instrument port and the FC sink port since the transfer functions are identical.

The instrument port V_3 is usually a sink but could also be used as a source. There are no tests presently defined that require the adapter instrument port to act as a source.

The tap adapter allows an FC source to communicate to an FC sink provided the FC source is capable of delivering adequate signal amplitude to compensate for the loss through the tap adapter. The tap accurately indicates the signal voltages at V_1 and V_2 if there is no loss between the tap adapter and the FC components.

Copyright International Organization for Standardization
Provided by IHS under license with ISO
No reproduction or networking permitted without license from IHS Not for Resale

The tap adapter should be placed as close as possible to the DUT to minimize any losses between the tap adapter and the DUT.

If the DUT is the FC port sink, it is not necessary that the source FC port maintain FC compliant signals. The source FC component is enabling a functional FC connection to the FC port sink (requiring full FC frames and other necessary FC protocol) and the FC port source may vary the amplitude, jitter, and other signal properties for the purposes of creating specific conditions at the FC port sink. The signal conditions at the FC port sink are known through measurement at V_3. The FC port sink may report errors through the normal FC protocol scheme. Note that it requires a FC port source capable of delivering a larger than maximum amplitude to deliver the maximum allowed signal amplitudes to the FC port sink because of the signal loss through the tap adapter.

If the DUT is the FC port source, the purpose of the FC port sink is to enable the functional FC connection. Due to signal losses in the tap adapter, it may be necessary to use a FC port-sink receiver that is more sensitive than minimally required or precision amplification needs to be provided somewhere in the path. The FC port-sink complies with the FC link transmission line termination requirements to minimize signal reflections.

B.3.2.3.2 Balanced - balanced (alternative 2)

When using the special 500 Ω probes (or equivalent circuits designed to minimize any internal reflections) one may sacrifice the impedance matching on the instrument input side in exchange for a simple 10-to-1 probe transfer function and a much lower insertion loss between the FC components. This is achieved by using the configuration shown in Figure A.7.

Depending on the details of the layout it may be better to eliminate the 5,6 Ω resistors and probe directly to the trace. Unless the probes are very close to the actual point of interest the measurements may not accurately indicate the signal at those points. This is caused by standing waves on the transmission lines on the board.

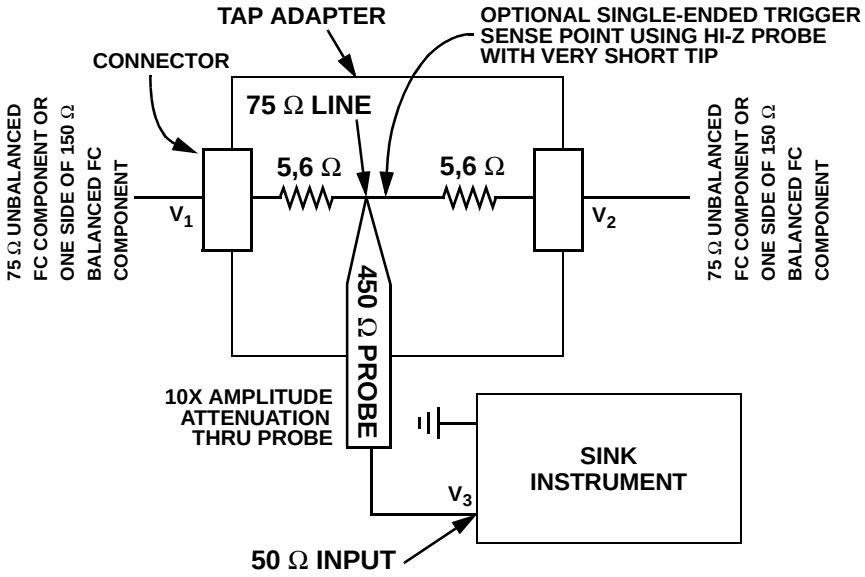

Figure B.7 - Half of balanced-balanced tap adapter (alternative 2)

Copyright International Organization for Standardization
Provided by IHS under license with ISO
No reproduction or networking permitted without license from IHS
Not for Resale

Table B.5 - Ideal transfer function for balanced - balanced tap adapter of figure B.7

To From	**Adapter Balanced Port "A"** (150 Ω), (V1) **FC Component as sink**	**Adapter Balanced Port "B"** (150 Ω), (V2) **FC Component as sink**	**Adapter Balanced Instrument Port** (150 Ω), (V3) **Instrument as sink**
Adapter Balanced Port "A", (150 Ω), (V_1) FC Component as source	NA	$V_2 = 0{,}861 * V_1$	$V_3 = 0{,}0925 * V_1$ $V_3 = 0{,}1074 * V_2$ (NOTE 1)
Adapter Balanced Port "B", (150 Ω), (V_2) FC Component as source	$V_1 = 0{,}861 * V_2$	NA	$V_3 = 0{,}0925 * V_2$ $V_3 = 0{,}1074 * V_1$ (NOTE 2)
Adapter Balanced Instrument Port (150 Ω), (V3) **Instrument as source** (NOTE 3)	NA	NA	NA

NOTE 1 Since $V_2 = 0{,}861 * V_1$ or $V_1 = 1{,}161 * V_2$ and $V_3 = 0{,}092\,5 * V_1 = 1{,}161 * 0{,}0925 * V_2 = 0{,}107\,4 * V_2$

NOTE 2 Since $V_1 = 0{,}861 * V_2$ or $V_2 = 1{,}161 * V_1$ and $V_3 = 0{,}092\,5 * V_2 = 1{,}161 * 0{,}092\,5 * V_1 = 0{,}107\,4 * V_1$

NOTE 3 Not normally used in this mode.

A separate single-ended trigger sense point is shown where a high-impedance probe with a very short tip could be used to extract a trigger input for the sink instrument. If used, this probe disturbs the electrical path to some degree and it shall be determined that this disturbance is negligible before using this scheme.

B.3.2.3.3 Balanced-unbalanced

In the more common case where unbalanced 50 Ω instruments are used, one may treat the instrument port in figure A.6 as a 150 Ω balanced source and use the source/sink balanced-unbalanced interface adapter shown in figure A.3 for the direct instrument connection. This configuration, shown in figure A.8, has a major advantage of being able to reuse the source/sink adapter with its special instrument-grade balun.

This scheme introduces more attenuation to the signal arriving at the actual instrument than the balanced-balanced alone but still delivers signals within the usable amplitude ranges for most instruments. An optional, low jitter, amplifier is shown if more amplitude is needed for the instrument. The operation between the FC components is exactly the same as for the balanced-balanced case.

--`,,```,,,,````-`-`,,`,,`,`,,`---
Copyright International Organization for Standardization
Provided by IHS under license with ISO
No reproduction or networking permitted without license from IHS Not for Resale

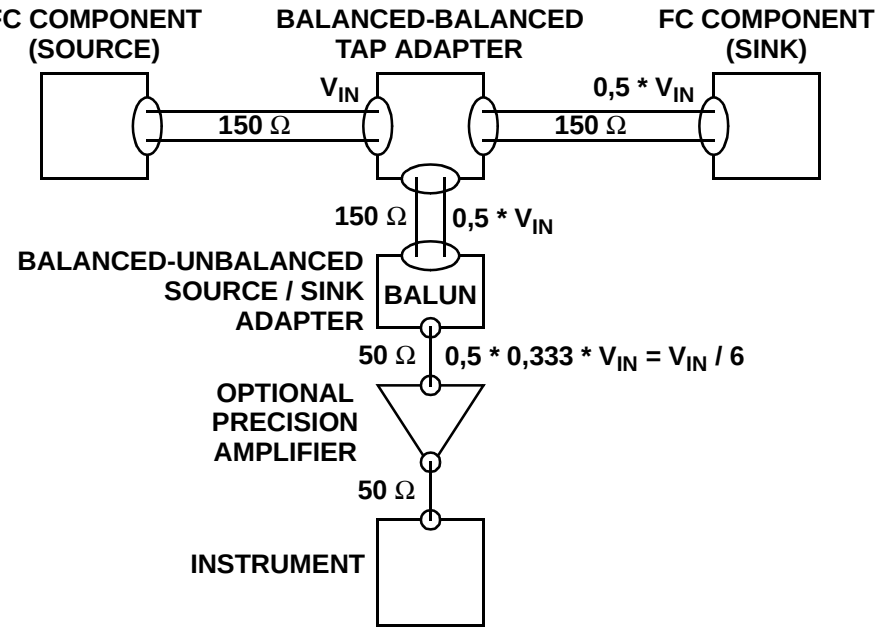

Figure B.8 - Balanced-unbalanced tap adapter configuration

The transfer functions are readily derivable from table A.1 and table A.4 for all cases. For convenience some transfer functions are shown in figure A.8.

B.3.2.4 Extracting a balanced trigger signal

Most instruments accept only single-ended trigger inputs yet the differential, or balanced, signals are the ones of interest. Using a single-ended trigger, extracted from only one side of a balanced signal, may affect the measured differential jitter when the measured balanced signals are actually unbalanced to a significant degree. This is because only one side of the balanced signal is used for the trigger timing and it may not be positioned the same in time as the differential trigger. The scheme illustrated in figure A.9 allows extraction of a single-ended trigger input for the instrument but uses a differential signal for the actual trigger timing. Since this scheme is only for trigger signals there is no need for a precise transfer function to be defined.

Copyright International Organization for Standardization
Provided by IHS under license with ISO
No reproduction or networking permitted without license from IHS
Not for Resale

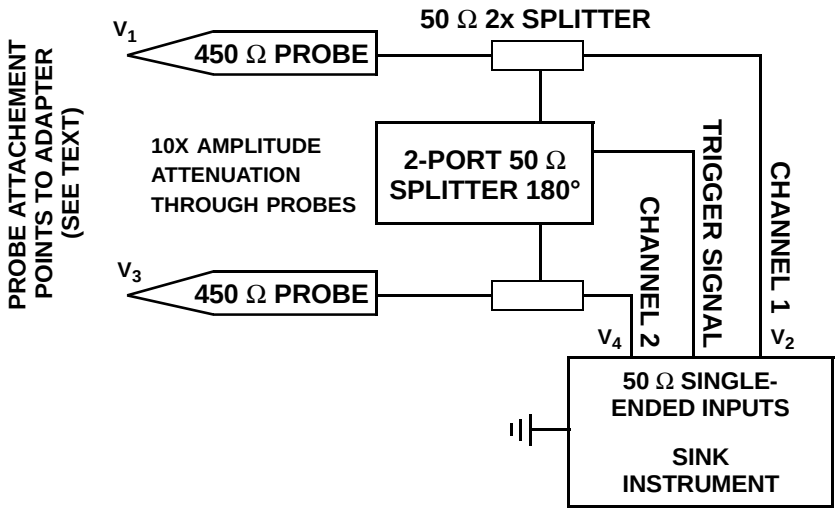

Figure B.9 - Extracting a balanced trigger for a single-ended instrument

The scheme shown in figure A.9 may be used in the adapters, as shown in figure A.5 and figure A.7 with the probes attached as shown in the figures. The transfer functions are reduced by a factor of two to accommodate the 2x splitters.

Another alternative is to replace the 2-port 50-Ω 180-degree splitter with a high speed differential logic buffer with accoupled inputs. The jitter contributions from the logic buffer itself need to be considered in the measurement.

B.3.3 Unbalanced copper

B.3.3.1 Overview

Unbalanced FC copper variants are much closer to the scheme used by most instruments than the balanced variants. The nominal characteristic impedance of the unbalanced copper variants is 75 Ω. The interface adapters are therefore simpler.

This annex assumes that unbalanced FC components are not used with balanced instrumentation. Should such a condition be of interest the source/sink adapter shown in figure A.3 could be used in figure A.10 to provide the adaptation from 75 Ω unbalanced to 150 Ω balanced.

B.3.3.2 Source and sink adapters for unbalanced copper variants (alternative 1)

Figure A.10 shows the adapter to use for unbalanced FC components with unbalanced instruments for both source and sink.

Copyright International Organization for Standardization
Provided by IHS under license with ISO
No reproduction or networking permitted without license from IHS Not for Resale

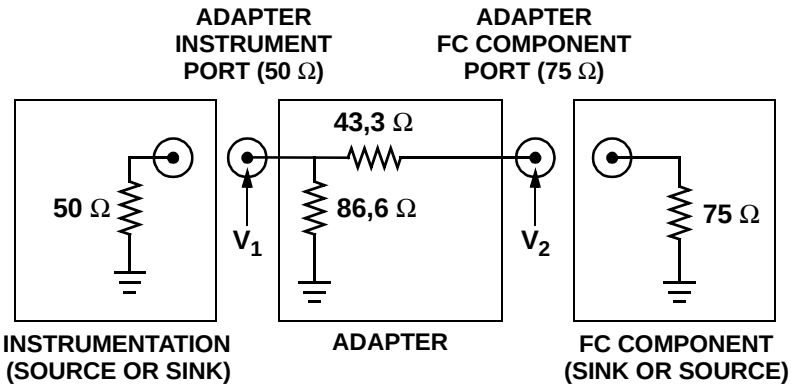

Figure B.10 - Source/sink interface adapter matching network for unbal - unbal copper

Table B.6 - Ideal transfer function for unbalanced - unbalanced copper adapter of figure B.10

To From	Adapter Instrument Port (150 Ω), (V1) Instrument as sink	Adapter FC Component Port (75 Ω), (V2) FC Component as sink
Adapter Instrument Port (50 Ω), (V_1) Instrument as source	NA	$V_2 = 0{,}634 * V_1$
Adapter FC Component Port (75 Ω), (V_2) FC Port as source	$V_1 = 0{,}423 * V_2$	NA

Comments in A.3.2.2 on source and sink adapters for balanced copper variants apply to both unbalanced and balanced interface adapters.

B.3.3.3 Source and sink adapters for unbalanced copper variants (alternative 2)

The circuit shown in Figure A.5 is also suitable for use in unbalanced applications. This circuit has a simple 10-to-1 transfer function with lower amplitudes presented to the instrument.

B.3.3.4 Tap adapters for unbalanced copper variants (alternative 1)

The circuit in figure A.11 is recommended for use with unbalanced copper variants.

Copyright International Organization for Standardization
Provided by IHS under license with ISO
No reproduction or networking permitted without license from IHS
Not for Resale

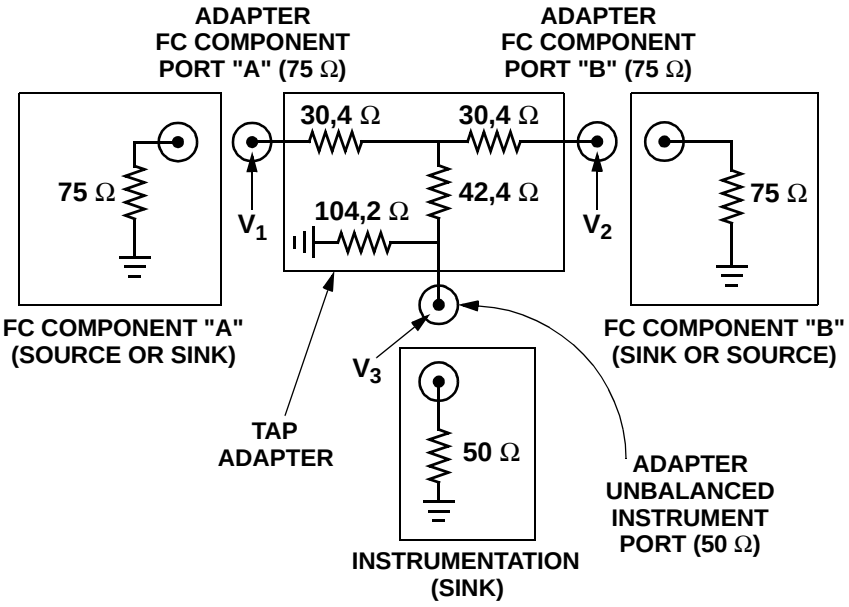

Figure B.11 - Unbalanced-unbalanced copper tap adapter

This adapter is optimized for minimum power loss with impedance matching on all three ports, assumes low-inductance and low capacitance resistors, and assumes that all ports are terminated with their characteristic impedance. Other networks, optimized for other characteristics, are possible by using more resistors and/or different resistor values.

Table B.7 - Ideal transfer function for unbalanced - unbalanced copper tap adapter of figure B.11

To **From**	**Adapter FC Component Port "A"** (75 Ω), (V1) **FC Component "A" as sink**	**Adapter FC Component Port "B"** (75 Ω), (V2). **FC Component "B" as sink**	**Adapter Instrument Port** (50 Ω), (V3). **Instrument as sink.**
Adapter FC Component Port "A", (75 Ω), (V_1). FC Component "A" as source	NA	$V_2 = 0{,}423 * V_1$	$V_3 = 0{,}260 * V_1$ $V_3 = 0{,}615 * V_2$ (Note 1)
Adapter FC Component Port "B", (75 Ω), (V_2). FC Component "B" as source	$V_1 = 0{,}423 * V_2$	NA	$V_3 = 0{,}260 * V_2$ $V_3 = 0{,}615 * V_1$ (Note 2)
Adapter Instrument Port (50 Ω), (V_3) Instrument as Source (Note 3)	$V_1 = 0{,}39 * V_3$	$V_2 = 0{,}390 * V_3$	NA
NOTE 1 Since $V_2 = 0{,}423 * V_1$ and $V_3 = 0{,}260 * V_1 = (0{,}260/0{,}423) * V_2 = 0{,}615 * V_2$ NOTE 2 Since $V_1 = 0{,}423 * V_2$ and $V_3 = 0{,}260 * V_2 = (0{,}260/0{,}423) * V_1 = 0{,}615 * V_1$ NOTE 3 Not normally used in this mode			

The relatively high loss across the tap adapter requires high launch amplitudes to attain the maximum signals at the receiver port.

Copyright International Organization for Standardization
Provided by IHS under license with ISO
No reproduction or networking permitted without license from IHS
Not for Resale

B.3.3.5 Tap adapters for unbalanced copper variants (alternative 2)

The circuit shown in Figure A.7 is also suitable for use in unbalanced applications. This circuit has a much lower insertion loss than alternative 1 but may introduce reflections in the probe if the probe is not designed properly. The signal amplitudes presented to the instrument are approximately 3x smaller than alternative 1.

B.3.4 Optical

B.3.4.1 Overview

Optical signals are always measured indirectly through some kind of optical-to-electrical interface, as shown in figure A.12.

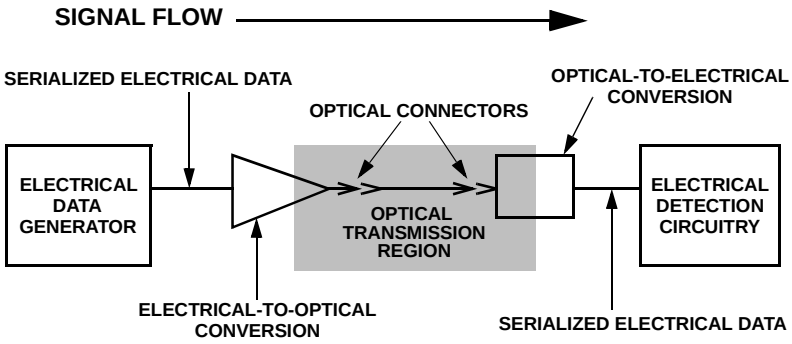

Figure B.12 - Basic optical system

The interface adapters required for optical systems may be part of the instrumentation if the instrumentation accepts an optical connector.

More generally, an external optical-to-electrical interface adapter is needed to determine the properties of the optical signals or to produce specified optical signals.

It is assumed in this clause that the components in the test configuration are all suitable for the optical variant under test. The structure of the test configurations are identical for all optical variants.

B.3.4.2 Source interface adapters

Figure A.13 shows one possible structure of an optical source interface adapter.

Copyright International Organization for Standardization
Provided by IHS under license with ISO
No reproduction or networking permitted without license from IHS
Not for Resale

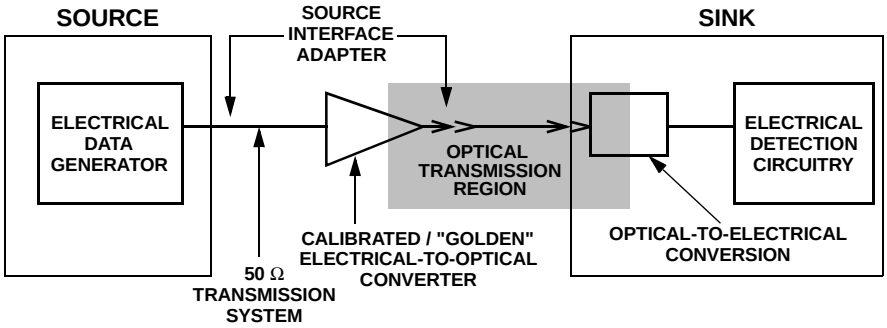

Figure B.13 - Source interface adapter

In the case shown, the electrical data generator provides a known electrical signal to a calibrated or “Golden” electrical-to-optical converter. The optical output is then connected to the optical interconnect that subsequently delivers an optical signal to the sink connector.

Since the optical input to the optical interconnect is known, the optical interconnect may be adjusted in a calibrated way to produce known optical signals to the sink. Attenuation and dispersion could be added in the optical interconnect for example.

Figure A.13 shows the condition where an electrical source is used with an external calibrated optical conversion device. The conversion could also theoretically be done within a source instrument.

Figure A.13 also shows an integrated sink where the optical-to-electrical conversion is done within the sink. It is also possible to use a calibrated optical-to-electrical conversion external to the (now electrical) sink instrument. For example, such a condition might be used for optical interconnect testing. The low-pass filter described in A.3.4.3 is required for the optical-to-electrical conversion.

In the test table B.8 of A.3.5, it is assumed that the external electrical-to-optical or optical-to-electrical conversion is used.

B.3.4.3 Sink interface adapter

Figure A.14 shows the structure for an optical sink interface adapter when using an electrical input sink.

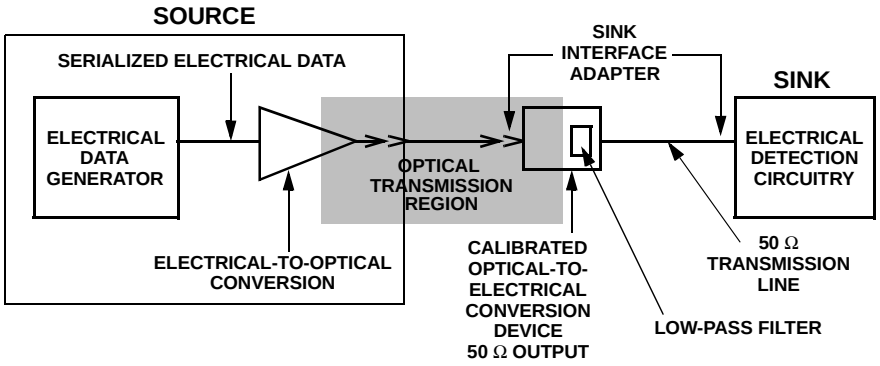

Figure B.14 - Sink interface adapter

Copyright International Organization for Standardization
Provided by IHS under license with ISO
No reproduction or networking permitted without license from IHS
Not for Resale

The optical-to-electrical conversion device shown in figure A.13 shall be calibrated independently and it shall contain low-pass filtering to reject the noise generated during the optical-to-electrical conversion process. A fourth-order Bessel-Thompson filter is the filtering scheme specified in FC-PI-n.

There is no interface adapter required if one uses a sink that accepts the optical interconnect connector directly and the calibration issue becomes part of the instrument specification.

B.3.4.4 Optical tap

The basic structure of an optical tap adapter is shown in figure A.15. The power of the optical source is split into two signals in a calibrated manner (maintaining the mode properties of the source and having a known power splitting ratio). Two optical fibres are coupled together within the tap adapter to allow some optical signal to pass to the test instrument while allowing most of the signal to go to the optical sink.

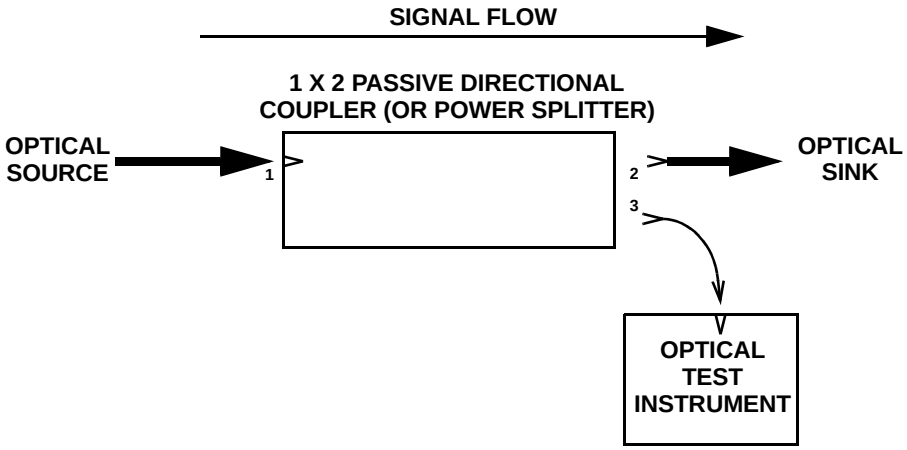

Figure B.15 - Optical tap adapter

In a high-power link (such as possible with Open Fibre Control systems) dangerous optical power levels may be present at the optical test port.

Use special care when selecting multimode optical tap adapters as not all commercially available splitters maintain the mode structure. For multimode optics collimated "out of the fibre" beam splitting techniques are suggested.

B.3.5 Specific tests

This clause addresses the methodology for constructing specific tests. It has several examples but is not intended to be comprehensive in this document.

Any specific test has a test objective relating to some property of the DUT. This test objective and DUT are used to determine the kind of test configuration to use. The test configuration calls out the instrumentation, the interconnect (including tap adapters and ISI generating cables, if used), the interface adapter(s), the test traffic and the test output point and form.

Copyright International Organization for Standardization
Provided by IHS under license with ISO
No reproduction or networking permitted without license from IHS Not for Resale

Table A.8 shows a few coarsely defined sample test configurations.

Table B.8 - Sample test configuration specifications

DUT	Test objective	Source	Interconnect	Sink	Traffic	Test output
FC Tx port with DB9 connector	Measure jitter output per FC-PH-n table entry x	FC Tx port with interface adapter in place	1 m quad cable	TIA	RPAT	TIA data
30 m quad cable	Measure ISI per FC-PH-n table entry y	Pattern generator with interface adapter in place	30 m quad cable	scope with interface adapter in place	RPAT	Scope eye diagram
FC Rx port	Measure jitter tolerance per FC-PH-n table entry z	FC Tx port with adjustable output parameters	quad cable with tap adapter in (used to measure signals at FC Rx port)	FC Rx port	CRPAT	BER from Rx port

Eventually a comprehensive list of all the tests needed for all variants could be compiled using this general form. More details could be specified for instrument settings, environmental conditions, sample times required, etc.

B.3.6 Description of baluns

B.3.6.1 Overview

The actual performance of the baluns described in this clause has not been verified. The construction suggested is derived from the best publicly available information. There is some reason to believe that the low-frequency performance requirements may not be adequately aggressive and that lower-frequency performance may be necessary. The actual low-frequency performance of the suggested construction may be adequate independent of the rationale. The information is provided in the interest of encouraging simple effective constructions (whose performance shall be verified by implementers).

Performance requirements for any balun used in figure A.3 and construction details of examples of such baluns are described in this subclause. Each Source/Sink Adapter uses one such balun.

Baluns are used to connect unbalanced transmission lines to balanced transmission lines and, at the same time, to match one impedance level to another. The high-frequency limitations of Faraday baluns prohibit their use for these testing applications. Therefore, only Guanella baluns are covered in the remainder of this annex.

The reader is encouraged to consult “Transmission Line Transformers”, second edition, Jerry Sevick, American Radio Relay League, 1990 [39]. This is the best reference on baluns available in 1997, and has a comprehensive bibliography. Note that the first edition is in Sevick’s opinion obsolete, having been overridden by the second edition in some major areas, areas critical to the present use of Guanella baluns in the Source/Sink Adapters.

NOTE The third edition (Noble Publishing, 1996) appears to be substantially identical to the second edition (ARRL, 1990).

The Guanella balun described here consists of two coax-wound toroids or twisted-pair wound ferrite beads of identical construction but differing connection as shown schematically in figure A.16. Two cores (rather than one common core) are used to reduce sensitivity both to the details of the 150 Ω balanced line, and also to the possible presence of grounded centertaps in the attached equipment. For the sake of clarity, the number of turns of coax around the toroid cores is not accurately shown in figure A.16.

--`,,```,,,,````-`-`,,`,,`,`,,`---

Copyright International Organization for Standardization
Provided by IHS under license with ISO
No reproduction or networking permitted without license from IHS Not for Resale

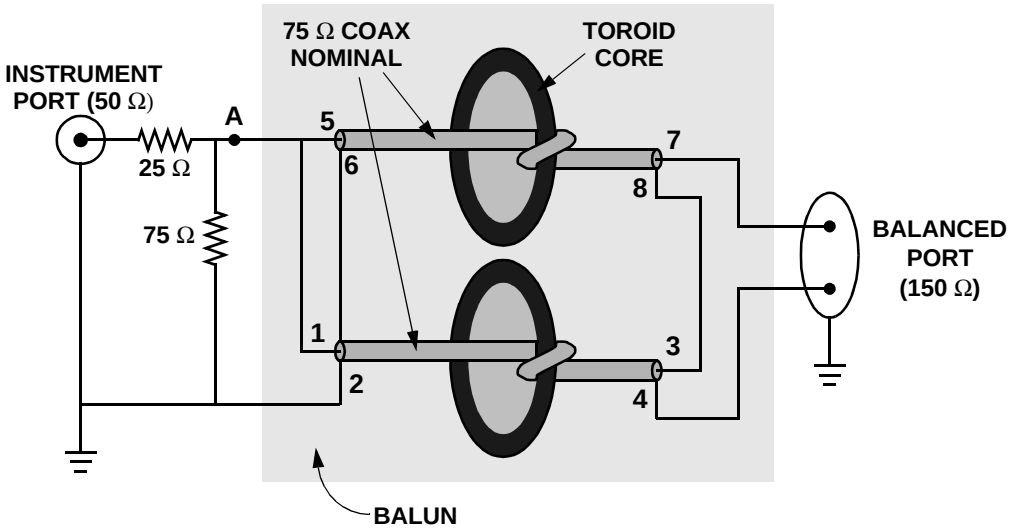

Figure B.16 - Source/sink adapter - schematic plus assembly view

This is intended to be an instrument-grade balun, optimized for waveform fidelity while using only easily-obtained standard passive components. Cost is a secondary issue, as these baluns are intended to allow the use of high-performance test equipment with standard 50 Ω ports. This balun is a 37,5 Ω single ended to 150 Ω differential design and the 25 Ω and 75 Ω resistors are required for proper matching.

B.3.6.2 Balun requirements

B.3.6.2.1 Overview

The balun required for the applications described in this annex shall meet the following requirements, that are intended to satisfy the needs of both Fibre Channel (at 1,0625 GBd) and Gigabit Ethernet (at 1,250 GBd).

The balun (composed of the two interconnected coax-wound toroids or twisted-pair wound ferrite beads) shall transform from 37,5 Ω unbalanced (coax side) to 150 Ω balanced (twinax side).

The balun shall have a passband from 10 MHz to 2 GHz with less than 1 dB insertion loss across this passband. This is a minimum requirement. More bandwidth is better, especially above the high-frequency limit, to better reproduce high-frequency jitter.

The passband limits are set by Fibre Channel on the low end, and Gigabit Ethernet on the high end.

The rationale for the 10 MHz low-frequency passband limit is that with the 8B/10B code having a maximum run length of five consecutive zeros or five ones, the absolute minimum frequency that may be generated is one-tenth of the signaling rate (106,25 MHz). Longer combinations of specific characters may generate spectral components below this limit, but as a practical matter, there is nothing significant below 10 MHz or perhaps 20 MHz. Long repeating patterns (for example, see A.1.2) may have significant spectral energy below 10 MHz. Baluns intrinsically have passband limitations that require a tradeoff. It is usually better to sacrifice the low-frequency area in favor of better high frequency performance.

The rationale for the 2 GHz high-frequency passband limit is the theory that for instrumentation, one should get at least to the third harmonic of the half-baud frequency; actually, the higher the better. As far as ordinary data receivers go, there is no point in having a passband high-frequency limit exceeding the signaling rate, that is, exceeding 1,25 GHz for Gigabit Ethernet, but for instrumentation, one really does want to see that high-frequency noise. The high-frequency limit is controlled by Gigabit Ethernet at 1,25 GBd, so this becomes at least (3/2)(1,25 GBd)= 1,875 GHz. The fourth harmonic, at 2,5 GHz, is weak because of

Copyright International Organization for Standardization
Provided by IHS under license with ISO
No reproduction or networking permitted without license from IHS Not for Resale

the spectral characteristics of NRZ waveforms. The fifth harmonic, at 3,125 GHz, may well be unreachable in practice. It is also unlikely that any ordinary data receiver has much response above 2 GHz.

B.3.6.2.2 Core and transmission-line requirements

The following requirements are derived from the Source/Sink Adapter balun requirements in A.3.6.2 along with the design constraints of the chosen balun design, a dual-core Guanella 1:4 balun [Sevick]. The cores may be ferrite toroids or multi-aperture ferrite shielding beads.

The transmission lines used to wind the two cores shall be of identical kind and preferably shall be cut from adjacent sections of one longer piece of transmission line.

The electrical lengths of the transmission lines in the balun shall be matched as close as possible. Difference in length should not exceed 2,5 mm (0,1 inch).

The transmission lines used to wind the two cores shall have a characteristic impedance of 75 Ω, plus or minus twenty percent (that is, between 62,5 Ωs and 90 Ω). The value of 75 Ω is chosen so that two such transmission lines in parallel have a net impedance of 37,5 Ω, while two lines in series have an impedance of 150 Ω. This parallel-to-series transformation is precisely how the 1:4 impedance transformation is achieved.

Each core winding shall have an inductance of at least 3,65 μH, measured with all other windings open-circuited. This is set by requirement that the inductive reactance be at least 3,3 times the transmission line characteristic impedance at the low-frequency limit, 10 MHz, to ensure no more than 0,1 dB loss from unbalanced currents in the transmission lines, at that frequency limit.

B.3.6.3 Specific wound core construction details

B.3.6.3.1 Overview

This subclause gives the construction details of some easily-built example wound toroids or beads that satisfy the requirements given above. Alternative 1, the hardest to build, gives the best performance. Alternative 2 is almost as good. Alternative 3, the easiest to build, is also the least precise.

B.3.6.3.2 Alternative 1 - wound toroid construction

Toroidal Cores. Amidon “FT-50A-43”, a toroid made of Amidon ferrite type #43 having a nominal initial permeability of 850 at 1 kHz and 525 at 10 MHz, and physical dimensions as follows: OD = 12,7 mm (0,500 inch), ID = 8 mm (0,312 inch), Height = 6,35 mm (0,250 inch). Cores are made with rounded corners, reducing crimping of the winding wire. Quoted permeabilities are ± 20 %, typical for ferrites.

Coaxial Cable. Micro-Coax “UT 47-70”, a semirigid coax with 70 Ω characteristic impedance, and dimensions as follows: OD(shield) = 1,2 mm (0,047 inch), OD(dielectric) = 9,525 mm 0,037 5 inch), OD(centerwire) = 0,18 mm (0,007 1 inch). The ideal impedance would be 75 Ω, but 70 Ω semirigid coax is available from stock, and close enough to 75 Ω to work well. The minimum inside bend radius is 13 mm (0,050 inches). The outside of this coax is the bare copper shield; there is no insulating jacket. Use an ordinary Scotchbrite pad to clean and polish the shield, in preparation for later soldering. It is necessary to put two layers of irradiated polyolefin heat shrink tubing on the coax before winding, to ensure that the minimum inside bend radius is observed, to pad on corners, and to prevent turn-to-turn shorts. The heat-shrink tubing is also easier to get a grip on, making winding easier.

Winding. Cut a piece of coax precisely 20,3 cm (8 inch) in length. Cover with two layers of heat-shrink tubing, and shrink tubing to fit the cable. Starting with a 5 cm (2 inch) pigtail, wind four widely-spaced turns on the toroidal core, ensuring that the turns are more or less evenly spaced to reduce parasitic capacitance. A turn is when the coax passes through the center of the core, not when the coax passes over the outside of the core. With the (heat-shrink tubing) padding, the four turns just fit through the toroid center hole. Do not be too aggressive about winding tightly on the core, as the semirigid coax cannot be bent too sharply, or too often, as the copper shield work-hardens as winding progresses. It is sometimes necessary to flatten the winding against the core, using a pair of smooth-jawed needle-nose pliers, to allow the last

Copyright International Organization for Standardization
Provided by IHS under license with ISO
No reproduction or networking permitted without license from IHS Not for Resale

turn to be wound. The winding consumes 10 cm (4 inches) of coax, leaving a total of 10 cm (4 inches) of pigtail lead, 5 cm (2 inches) on either side, that is required for easy winding. If the pigtails need to be cut shorter when soldered into the circuit, be sure that both toroids' pigtails are cut to the same length by measuring inward from the ends. The point of all this precision is to ensure that both toroids are wound with the same length of semirigid coax.

Stripping of and connection to the coax. Do this for each end of each transmission line. Strip heat-shrink tubing back 19 mm (0,75 inch) from the end. Use a razor blade or Xacto knife to score the shield all the way around in a circle 13 mm (0,5 inch) from the end. Note that the length match requirements shall be maintained throughout this process. Using fingers, force the end to gyrate in a circle around the center axis of the coax, bending the coax at the scored circle in all directions with a circular motion, until the shield breaks. As the copper shield metal is only 0,13 mm (0,005 inches) thick, this is easy. Using pliers with sharp teeth, pull the now-freed piece of shield off of the coax insulation, and discard it. Using the razor blade or Xacto knife and a pair of 0,75 mm (0,030 inch) stopping shims on either side of the coax dielectric, cut the insulation all the way around at a point 9,5 mm (0,375 inch) from the end, almost but not quite all the way to the center conductor. The stopping shim prevents accidental cutting or nicking of the very thin center conductor. Use the pliers to pull the now-free insulation plug off, and discard it. Some minimal amount of the insulation should still be visible, to prevent center-to-shield shorts. Tin the shield and center conductor. This end is now ready for soldering into the network.

Important: Do not use a tubing cutter to cut the shield, as this leaves a constriction and a burr, that cause an impedance bump. It is acceptable to cut the shield with a razor saw or abrasive drum, so long as the insulation isn't too deeply cut.

Mounting. When the wound toroid has been placed and soldered into the network, fix the toroid to the circuit board with a generous blob of silicone adhesive caulk, being sure to wet both the core and the windings, as well as the circuit board. To ensure adhesion, the surfaces to be glued are completely free of grease, including fingerprints. Rinsing with acetone is sufficient and does not harm the toroid or wire. Pinning the balun down with soft rubber prevents random changes in the characteristics of the network, in-use mechanical fatigue of the semirigid coax, and strain-induced changes with temperature.

B.3.6.3.3 Alternative 2 - wound toroid construction

In place of the heat-shrink padded semirigid coax, use RG-179 polytetrafluoroethylene-insulated 75 Ω miniature coax, that is the same diameter, 2,54 mm (0,100 inch), so the winding and construction details are much the same as in clause A.3.6.3.2 (Alternative 1) above, except that RG-179 is more flexible and harder to damage. Use the same Amidon FT-50A-43 core as above. The lengths shall still be matched.

B.3.6.3.4 Alternative 3 - wound bead construction

Shielding Beads. Amidon "FB-43-5111", a six-hole ferrite bead made of Amidon ferrite type #43 having a nominal initial permeability of 850 at 1 kHz and 525 at 10 MHz. The physical dimensions as follows: OD = 6 mm (0,236 inch), Hole ID = 1 mm (0,038 inch), Length= 10 mm (0,394 inch). Quoted permeabilities are ±20 %, that is typical for ferrites.

Twisted-Pair Magnet Wire. There are two alternatives. One may make one's own by twisting two strands of double-enamel (also called "heavy build") AWG #38 magnet wire together. Before twisting, color-code one strand with a felt tip permanent marker. Or, one may buy for instance "Multifilar Magnet Wire" from MWS Wire Industries, 31200 Cedar Valley Drive, Westlake Village, CA 91362, telephone 818-991-8553, fax 818-706-0911, www.mswire.com. MWS Wire has three combinations of wire size and insulation thickness that yield a nominal 75 Ω impedance: #28 wire with quadruple insulation build (stock number B2284111), #32 wire with triple insulation build (B2323111), and #38 wire with double insulation build (B2382111). Single insulation build wire would have to be too thin to be practical.

To achieve 75 Ω impedance for twisted pair magnet wire, the target characteristic impedance (Z_O) should be higher than 75 Ω as many things reduce Z_O and few things increase it. Experimentation is often needed. Reference: [40] "Twisted Magnet Wire Transmission Line" Peter Lefferson, IEEE Trans on Parts, Hybrids, and Packaging, Vol. PHP-7, No. 7, pp 148-154, December 1971.]

--`,,```,,,,````-`-`,,`,,`,`,,`---

Copyright International Organization for Standardization
Provided by IHS under license with ISO
No reproduction or networking permitted without license from IHS Not for Resale

Winding. Cut precisely 12,7 cm (5 inches) of the twisted-pair wire. Wind two and one-half turns by threading the twisted pair through five holes such that each hole contains exactly one twisted pair, there are no places where the twisted pairs cross each other. For example, if the bead faces are lettered A and B, and the holes are numbered clockwise 1 through 6 on face A, thread the twisted pair through the holes in the following order: Pigtail A to A1, (A1-B1), B1-B6, (B6-A6), A6-A5, (A5-B5), B5-B4, (B4-A4), A4-A3, (A3-B3), B3 to Pigtail B. The parenthetical paths are within the bead. Drawings are provided in the Amidon catalog. The winding consumes 7 cm (2,75 inches) of twisted pair, leaving 5,7 cm (2,25 inches) of pigtail, or a little more than 2,5 cm (1 inch) on each side. As always, lengths shall be matched.

Mounting. The magnet wire isn't strong enough to be depended on for mounting. Either glue the core down with adhesive silicon caulk as described under alternative 1, or thread a length of #22 wire through the one remaining hole (of six) and solder this wire down to the printed circuit board at each end, being careful not to create a shorted turn.

B.3.6.4 Connection of wound cores into baluns

Each balun requires two coax-wound toroids (or twisted-pair wound beads), prepared as described above. As shown in "Source/Sink Adapter schematic plus assembly view" (see figure A.16), the two 70 Ω coax (or 75 Ω twisted pair) transmission lines are connected in parallel on the left (instrument-port) side, and in series-aiding on the right (twinax-port) side. This is a classic 1:4 Guanella configuration, transforming the 75/2 = 37,5 Ω of point A to the 75 * 2 = 150 Ω at the twinax connector. Note that the coax shields on the twinax side are "hot" and shall not be grounded.

Specifically, on the left, the shields (numbered 2 and 6) of both coax lines are connected together and grounded, and their center conductors (numbered 1 and 5) are connected together at point "A".

On the right, the shield (numbered 4) of one coax (threads core #1) is connected to one twinax connector pin, while the center conductor (numbered 3) is connected to the shield (numbered 8) of the other coax (threads core #2). The center conductor (numbered 7) of this other coax is connected to the other twinax connector pin.

B.3.6.5 Other source/sink adapter components

The resistors shall have very low self-inductance, with good RF characteristics up to 2 GHz or 3 GHz. Panasonic "Precision Thick Film Chip Resistors" (type ERJ) appear suitable.

DC-blocking capacitors are not needed in the Source/Sink Adapter, as this is an instrument adapter that is always used either with standard Fibre-Channel or Gigabit-Ethernet receivers (that frequently provide their own AC-coupling elements—capacitors or transformers), or in a well-controlled experimental setup (where ground offsets are much less than 1 V) or with standard inter-enclosure transmitters. Intra-enclosure transmitters are not required to have these blocking elements but are usually in a well controlled environment where ground offsets are minimal.

Copyright International Organization for Standardization
Provided by IHS under license with ISO
No reproduction or networking permitted without license from IHS Not for Resale

Annex C
(informative)

Choosing the corner frequency: f_c / 1 667

C.1 Overview

The tolerance mask depicted in figure 3 defines the magnitude of sinusoidal jitter to be applied to a receiver under test as frequency is swept. In that figure, a corner frequency is defined as serial data rate divided by 1 667. This annex discusses how that frequency value was determined.

The corner frequency is based on previous work in SONET. In SONET, the upper corner frequency was defined as the baud divided by 2 500. For example, at the SONET rate of 622 MBd, the corner frequency is 249 kHz. For a Fibre Channel rate of 1 062,5 MBd, the corner frequency would be 425 kHz.

The amplitude of sinusoidal jitter to be applied, as specified by SONET, above the corner frequency, is constant at 0,15 UI peak-to-peak. Below the corner frequency, applied jitter is specified to increase at 20 dB/decade. The magnitude function for the region below the corner frequency is 0,15*(f_c /250 0)/f_sine, peak-to-peak, where f_c is the serial data rate and f_sine is the applied sinusoidal test frequency.

Figure A.1 shows Bode plot asymptotes for tolerance masking applied to the 1 062,5 MBd Fibre Channel rate. The diamond trace depicts jitter at low frequencies increasing at 20 dB/decade below the corner. The triangle trace depicts high-frequency jitter (above the corner) that is constant at 0,15 UI. The two traces intersect at 425 kHz.

A difference between SONET and Fibre Channel is that Fibre Channel specifies the amplitude to be 0,10 UI peak-to-peak above the corner frequency for electrical variants (0,05 UI for optical variants). In addition, receivers shall tolerate an additional 0,1 UI of jitter at high frequencies. In actual systems, this 0,1 UI is not assigned (available for crosstalk, etc.).

The square trace plots high-frequency jitter that is constant at 0,10 UI peak-to-peak, per Fibre Channel. This trace intersects the diamond trace at 637 kHz. 637 kHz is a linear extrapolation of the 20 dB/decade line down to the 0,1 UI asymptote. As 0,10 UI is 2/3 of 0,15 UI, the corner frequency factor is scaled by 2/3 from 2 500 to 1 667. Accordingly, the corner frequency scales from f_c /2 500 (425 kHz) up to f_c /1 667 (637 kHz).

Copyright International Organization for Standardization
Provided by IHS under license with ISO
No reproduction or networking permitted without license from IHS Not for Resale

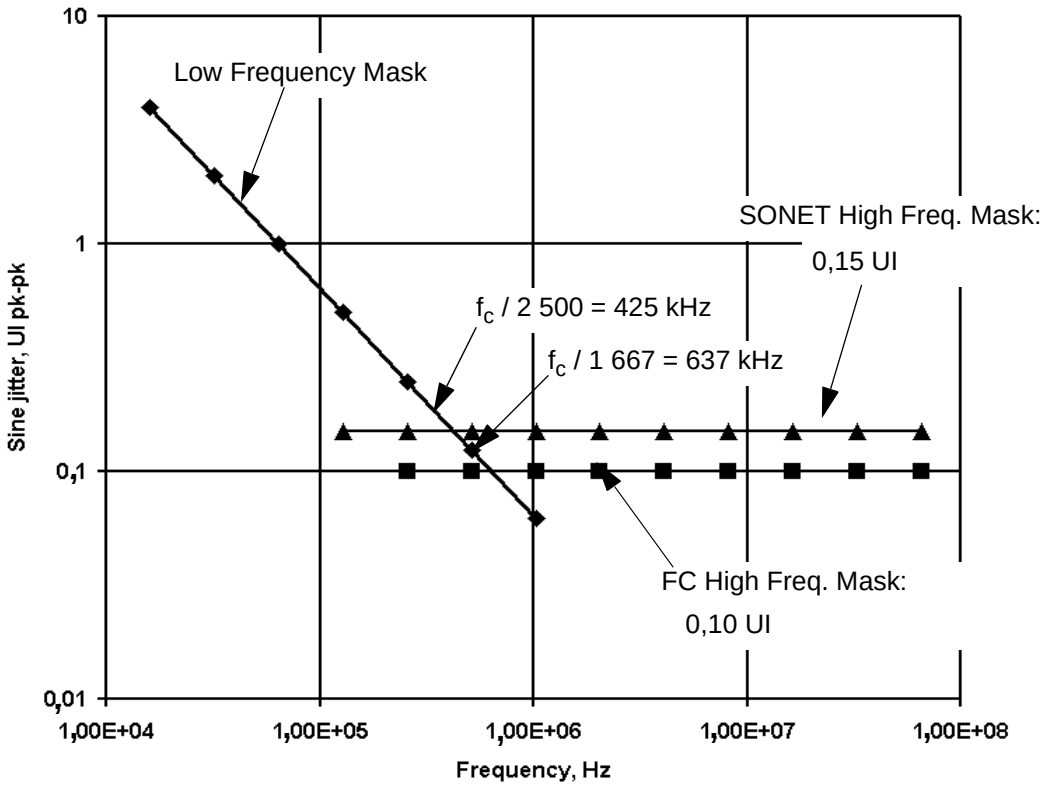

Figure C.1 - Tolerance mask asymptotes for 1 062,5 MBd

Finally, an additional concern was addressed. Fibre Channel specifies transmitter frequency stability limits of ±100 ppm. Within this tolerance, it is possible for the transmitter to oscillate between the two limits at some frequency and waveform and cause corresponding phase shift or jitter. It is important that the jitter tolerance test applies at least as much peak-to-peak jitter as such an oscillation would cause.

Both sinusoidal and square wave ±100 ppm oscillations were considered. Figure A.2 plots the peak-to-peak jitter caused by both types of oscillation and compares them to the low-frequency (below the corner frequency) tolerance mask discussed above. The tolerance mask indeed applies more jitter than the ±100 ppm oscillations, satisfying the concern.

Copyright International Organization for Standardization
Provided by IHS under license with ISO
No reproduction or networking permitted without license from IHS Not for Resale

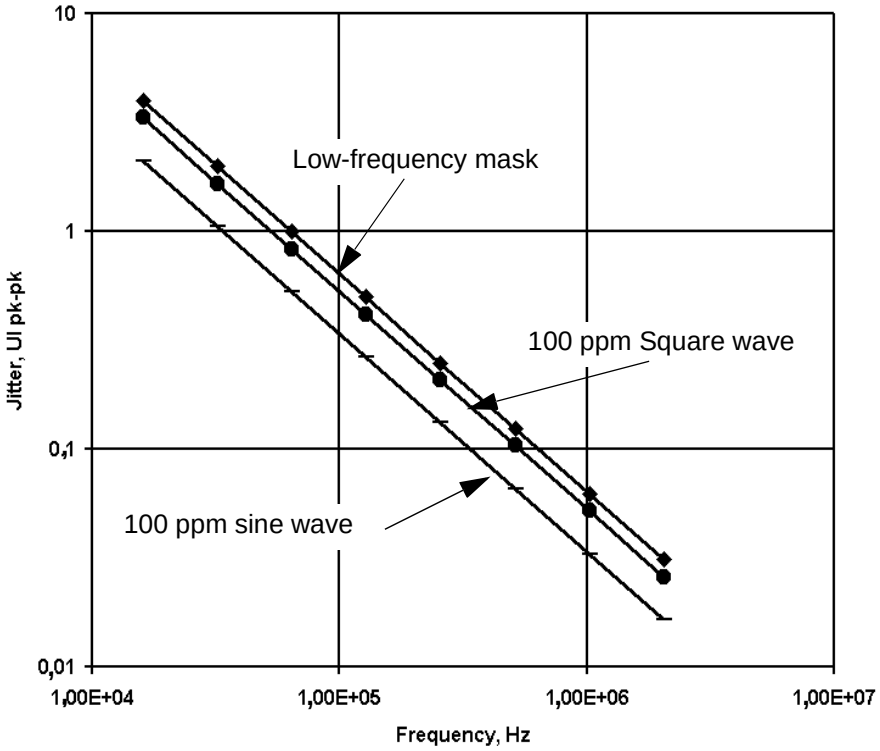

Figure C.2 - Comparison of low-frequency clock jitter and tolerance mask

The corner frequency at f_c /1 667 applies not only to jitter tolerance, but also to the high-pass weighting function for jitter output as shown in figure 27.

--`,,```,,,,````-`-`,,`,,`,`,,`---
Copyright International Organization for Standardization
Provided by IHS under license with ISO
No reproduction or networking permitted without license from IHS
Not for Resale

Annex D
(informative)

Extrapolation to low-probability CDF levels

D.1 Introduction

Extrapolation to the low-probability levels required for signal quality specification enforcement is often attractive as a time saving technique due mostly to the time required to acquire sufficient data at the low-probability CDF levels where the specifications are written. This annex explores extrapolation and some risks with extrapolation that may not be obvious. These risks increase somewhat dramatically when non 8b10b encoding schemes are used because they may introduce a population of DJ that occurs only rarely.

This annex assumes cases where DJ is dominated by DDJ and DJ that is independent of pattern (power supply, etc.) is assumed negligible. If other types of DJ are not negligible, they are also assumed to have DJ ceilings similar to 8B10B test patterns in such a way that the composite is above 1E-5.

D.2 Effects of DJ calculation and encoding scheme

Consider the following recipe for combining DJ and RJ:

a) The value recorded for DJ is defined as the extreme measured edge in the DJ population;
b) The RJ PDF is calculated from population that exceeds the recorded DJ value;
c) Convolve the RJ PDF with the DJ extreme value to produce the TJ.

If one uses this method for calculating TJ then the TJ result shows more jitter in the signal than would be seen if the convolution were done with the actual DJ PDF prior to calculating the CDF for the TJ. This TJ error happens because the worst DJ edge does not happen with probability ¼. It actually occurs much less frequently.

However, in order to measure the PDF of the RJ, the important data occurs below the DJ ceiling that occurs at approximately 1/(2*pattern length).

Using 8b/10b encoding effectively raises the DJ ceiling by limiting run lengths and running disparity substantially. Use of the 8b10b CJTPAT pushes the ceiling down somewhat but and even then, it's not too bad. Because of this relative insensitivity of the DJ ceiling to data pattern, different measurement techniques on 8b/10b data should reach similar conclusions, even if the measurement techniques cannot measure below 10^{-9}. The RJ population is accessible at relatively high probabilities with less data required to achieve an accurate extrapolation. Non-8b10b schemes push the DJ ceiling down considerably and may lead to large errors in extrapolation schemes unless care is taken.

Long, non 8b10b encoding (e.g., 64b/66b, scrambling etc.), effectively drops the DJ ceiling to a significantly lower value and the ceiling becomes very pattern and application dependent. The statistics of extrapolation may be changed dramatically.

Other questions also arise, as follows.

a) How stressful should a compliance pattern be?
b) What should that stressful pattern be?
c) How pessimistic may the measurement be and still have an accomplishable task?

Data patterns with long run-length (and therefore large running disparity) require the ability to measure low error-rates to accurately capture performance. On a BERT scan, RJ may only be measured confidently when looking at error rates below 1/(2*pattern length). With 8b10b, capturing RJ is much easier.

Copyright International Organization for Standardization
Provided by IHS under license with ISO
No reproduction or networking permitted without license from IHS Not for Resale

D.3 Example extrapolations

Two sets of CDF vs. time figures are shown to illustrate the basic relationships. The first set, figure A.1 through figure A.4, simulates the results with a PRBS data pattern with 32000 bits while in the second set, figure A.5 through figure A.9, a 10 000 000 bit data pattern is used. These two data patterns have significantly different DJ ceilings.

Another important effect on the accuracy of the extrapolation is the set of data points used to create the curve fit used for the extrapolation. Extrapolations from curve fits obtained only from high probability data points are compared with curve fits obtained from a selection of lower probability data points. It is shown that the long data pattern has a much larger risk of large extrapolation errors in TJ even when sampling down to the 10^{-9} level.

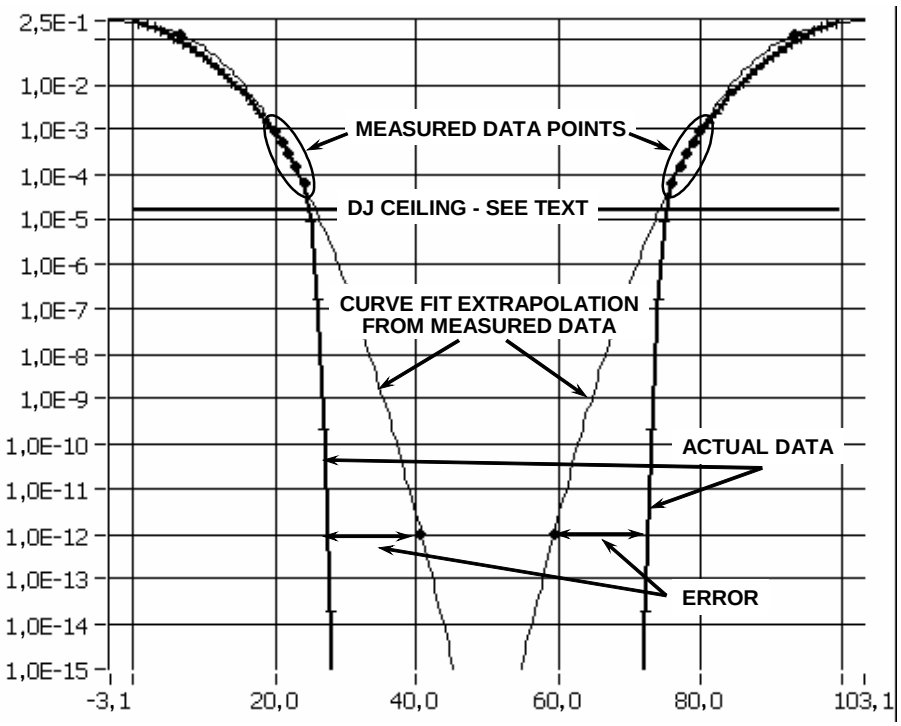

Figure D.1 - 32 000 bit data pattern results

The data points used to create the curve fit are shown on each figure with the label 'measured data points'. The difference between the actual data curve and the extrapolated curve fit at the CDF = 10^{-12} level is shown as the 'error' or more accurately the 'extrapolation/curve fit error'.

The error at the 10^{-12} level reduces substantially when only points below the DJ ceiling are used for the curve fit. See figure A.4 and figure A.9. With the effective jitter model that uses the 10^{-6} and 10^{-12} levels, serious departures from the data curve at the higher values may be seen but this departure is not important in predicting performance at the 10^{-12} CDF level. When data points both above and below the DJ ceiling are used to create the curve fit a large error remains. In all the examples shown the calculated jitter is greater than the actual jitter. This error direction causes pessimistic signal quality results and optimistic receiver tolerance results.

The performance at the higher values are what is typically seen on waveform sampling oscilloscope eyes. The observed waveform eye opening may not map at all with the performance at the CDF = 10^{-12} level.

--`,,```,,,,````-`-`,,`,,`,`,,`---

Copyright International Organization for Standardization
Provided by IHS under license with ISO
No reproduction or networking permitted without license from IHS Not for Resale

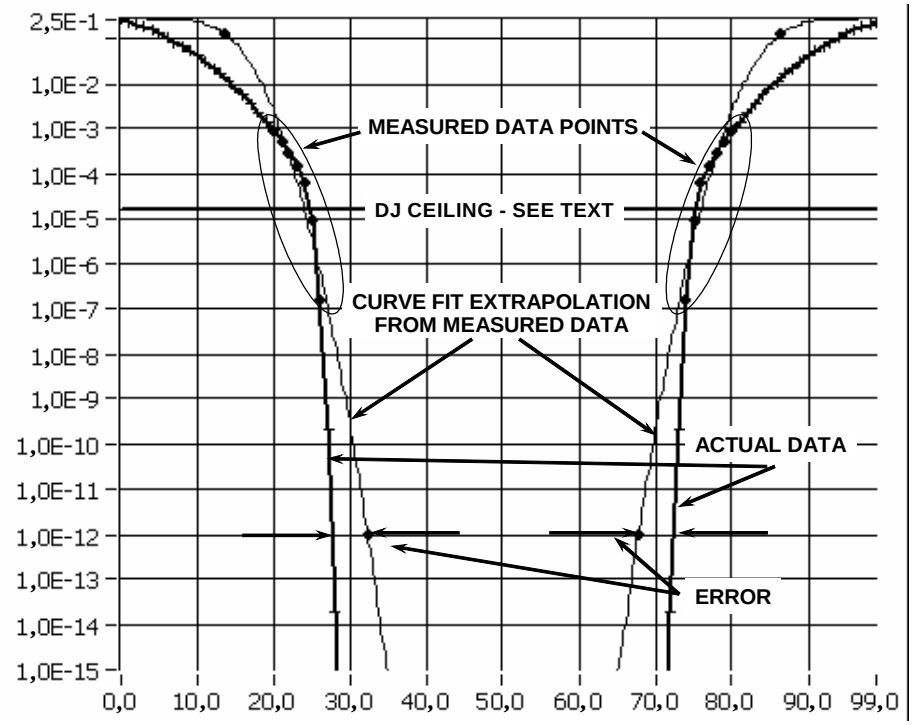

Figure D.2 - 32 000 bit data pattern results

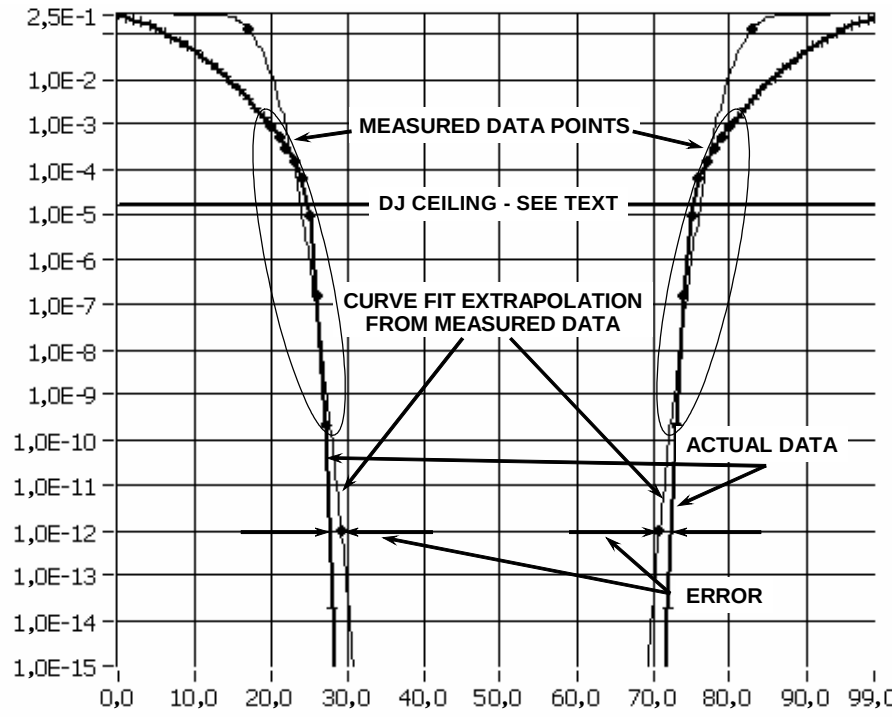

Figure D.3 - 32 000 bit data pattern results

Copyright International Organization for Standardization
Provided by IHS under license with ISO
No reproduction or networking permitted without license from IHS
Not for Resale

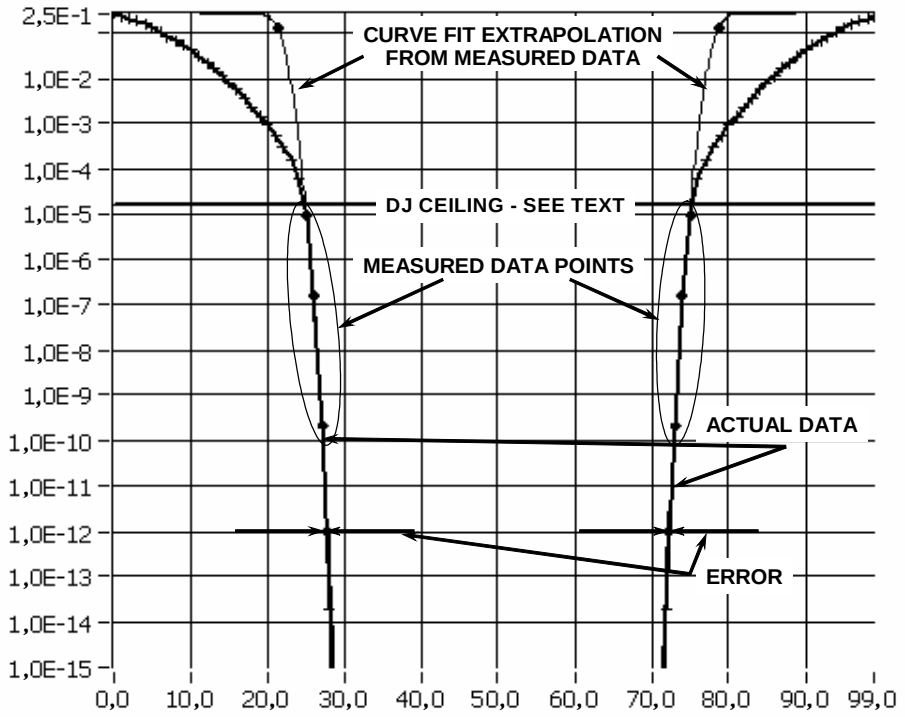

Figure D.4 - 32 000 bit data pattern results

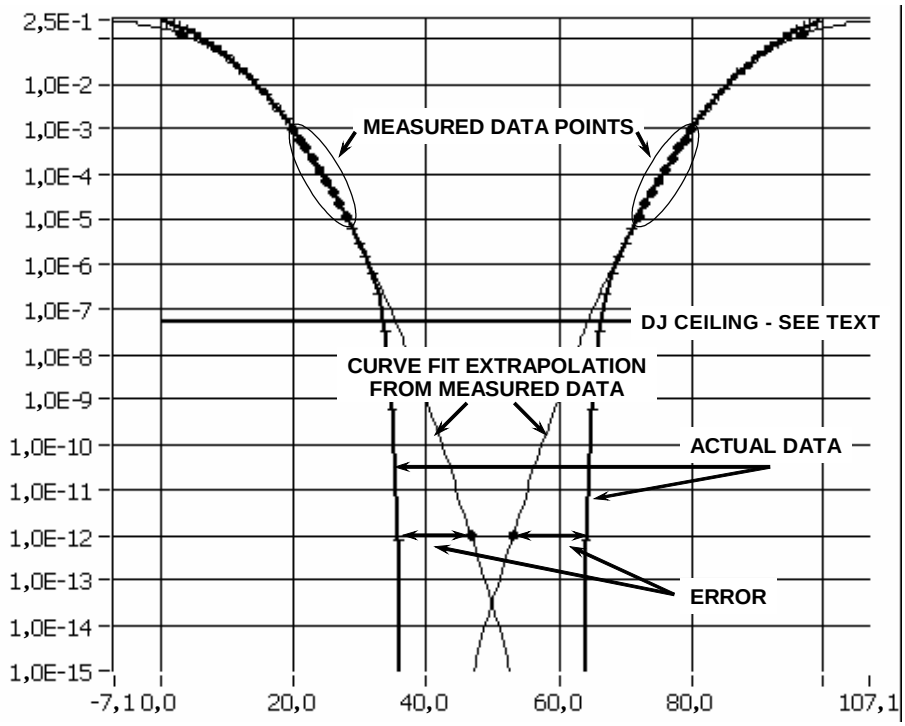

Figure D.5 - 10 000 000 bit data pattern results

Copyright International Organization for Standardization
Provided by IHS under license with ISO
No reproduction or networking permitted without license from IHS
Not for Resale

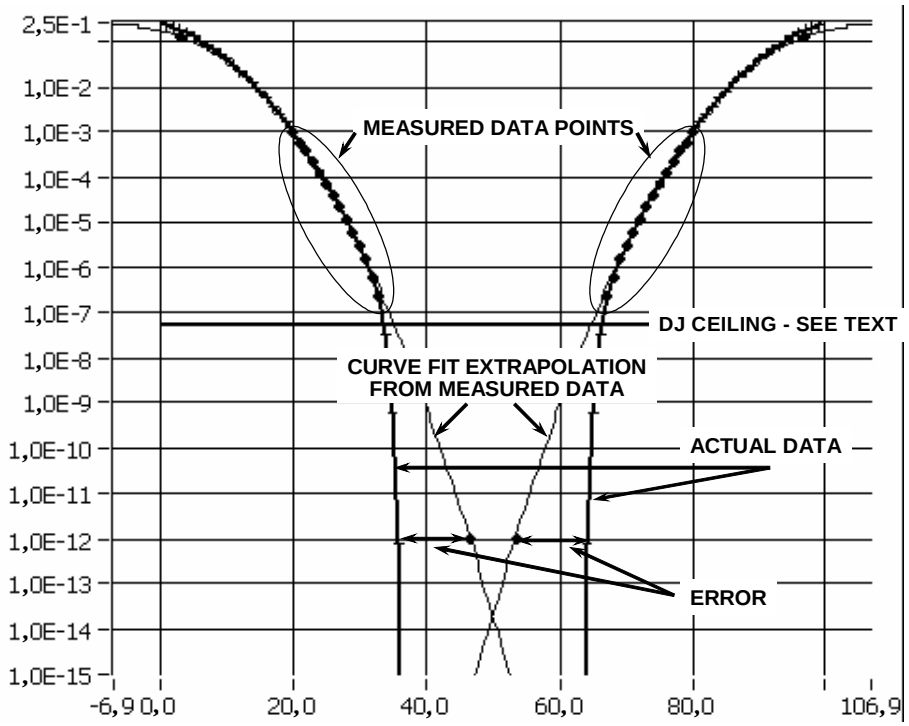

Figure D.6 - 10 000 000 bit data pattern results

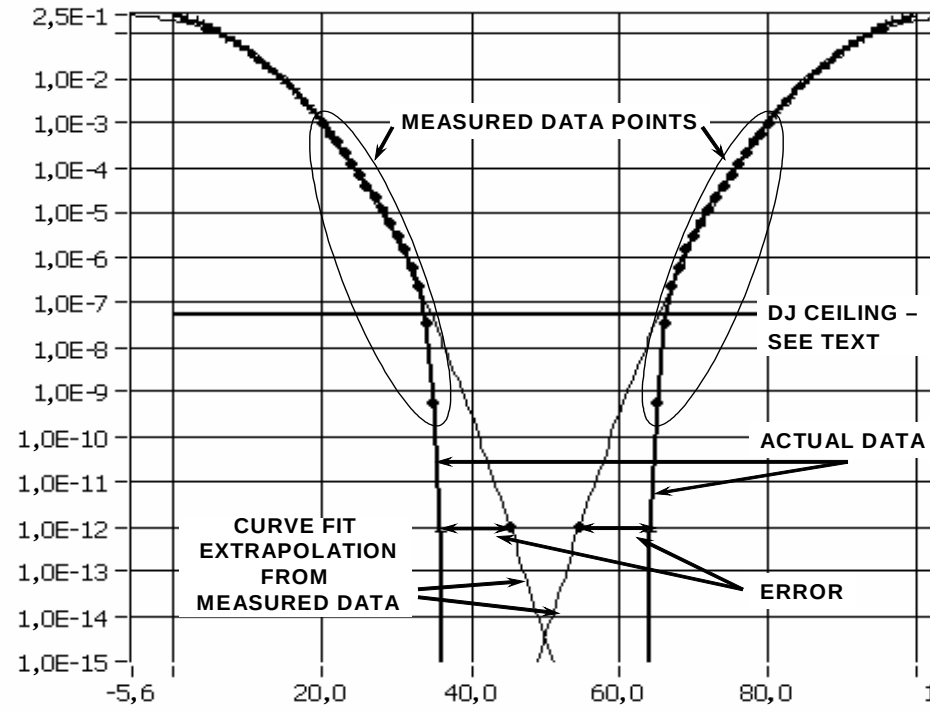

Figure D.7 - 10 000 000 bit data pattern results

Copyright International Organization for Standardization
Provided by IHS under license with ISO
No reproduction or networking permitted without license from IHS
Not for Resale

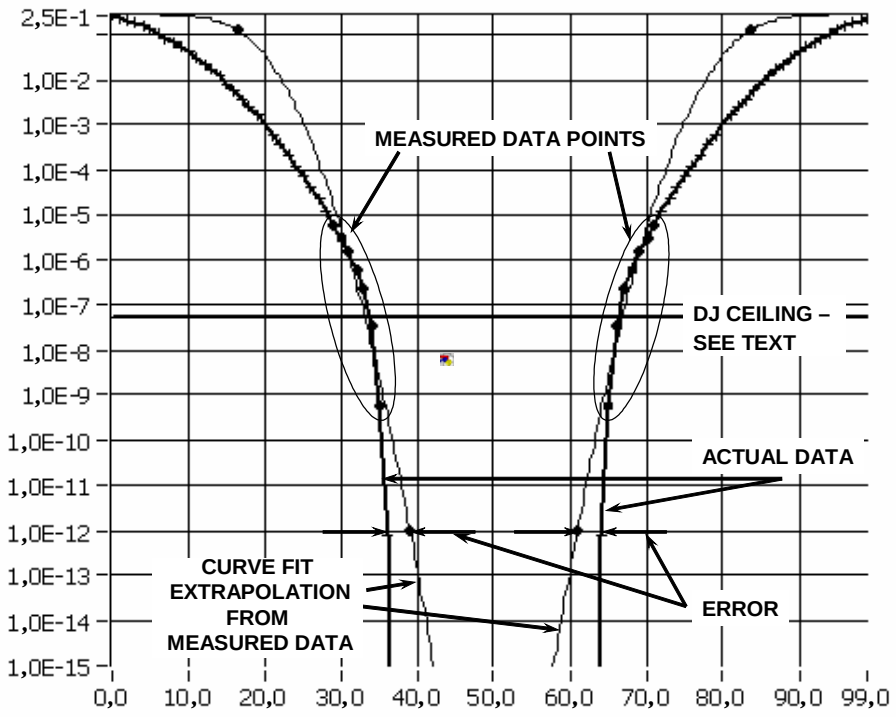

Figure D.8 - 10 000 000 bit data pattern results

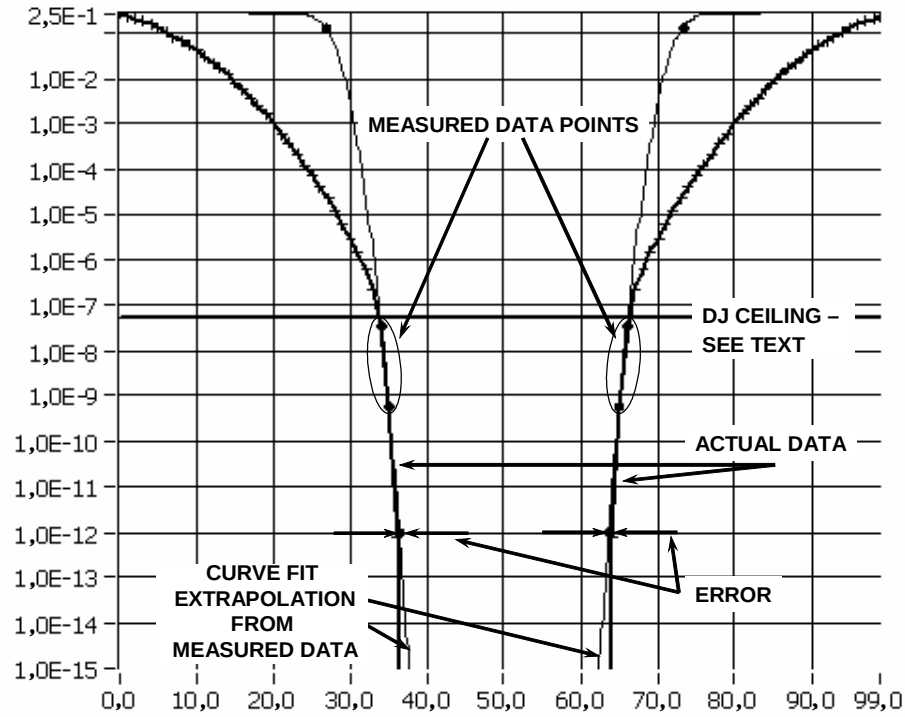

Figure D.9 - 10 000 000 bit data pattern results

Copyright International Organization for Standardization
Provided by IHS under license with ISO
No reproduction or networking permitted without license from IHS
Not for Resale

D.4 Relationship to data pattern

Jitter distributions resulting from different data patterns passed through different copper coax lines as measured are shown in figure A.10 and figure A.11. There is a Gaussian-like portion on the higher order PRBS patterns that is strictly DJ because it is bounded. Yet, this low -population DJ may be indistinguishable from RJ at the sampling levels used in these figures.

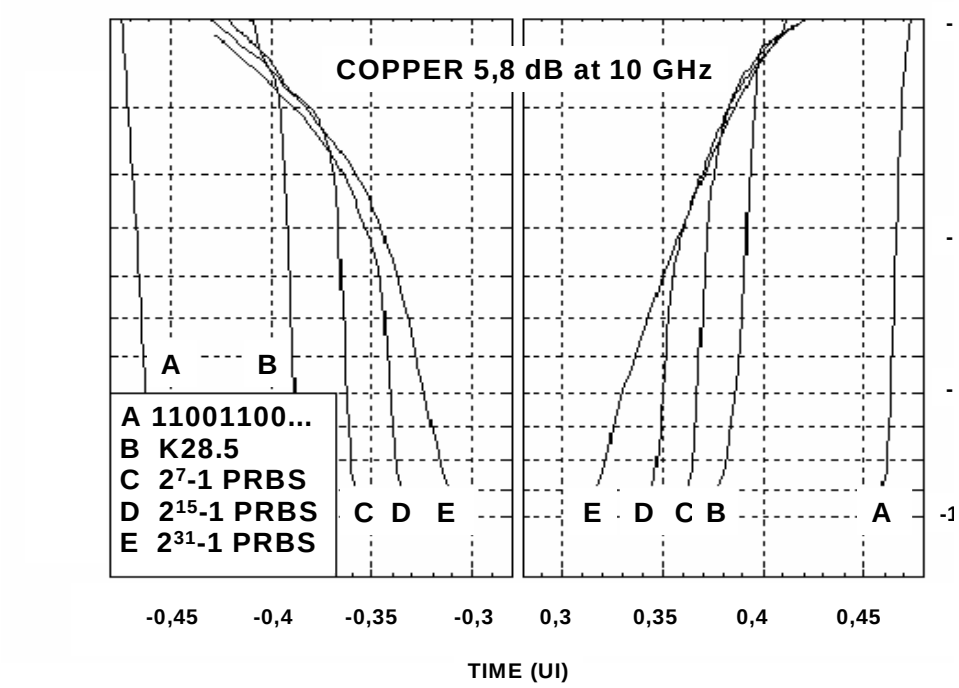

Figure D.10 - Example 1 jitter distribution versus data pattern

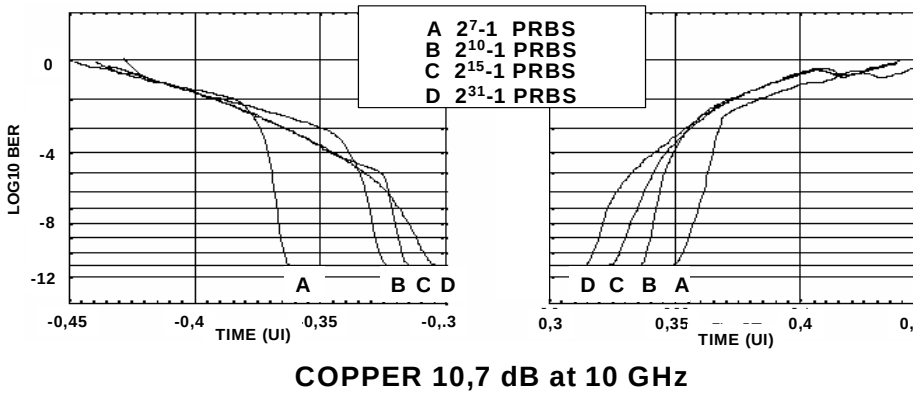

Figure D.11 - Example 2 (more loss) jitter distribution versus data pattern

D.5 Summary

Significant traps await the unwary at the low-population levels. Of particular concern are data patterns that have long repeat lengths and extrapolations that are done only from the high-population portions of jitter distributions.

Copyright International Organization for Standardization
Provided by IHS under license with ISO
No reproduction or networking permitted without license from IHS
Not for Resale

Annex E
(informative)

Frequency domain measurement (spectrum analyzer)

E.1 Overview

Spectrum Analyzers provide data in the frequency domain rather than the time domain. A spectrum analyzer requires the SERDES to transmit “clock-like” data into a spectrum analyzer. An example of “clock” data is a K28.7 or a repeating bit sequence of 5 0s and 5 1s. Other examples of “clock” data are any bit sequences of alternating 0s and 1s. The best pattern to use may be D21.5 or D10.2, since a 10101010 pattern results in harmonics with the greatest spacing and reduces aliasing or frequency overlap. For some applications D42.3 is chosen, however, because it has 50 % transition density that is important for some components. Whatever clock pattern is used, it defines a carrier frequency f_c. The spectrum analyzer provides a power (dBm) versus frequency (Hz) plot as shown in figure A.1.

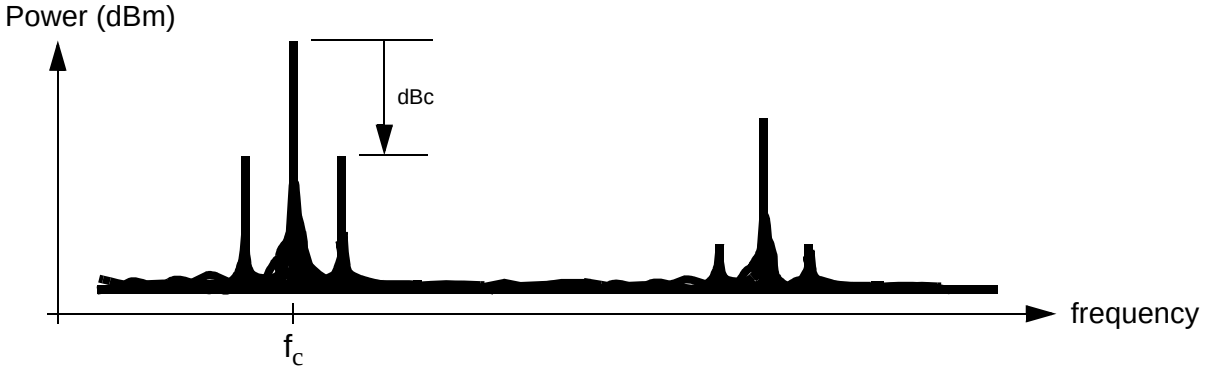

Figure E.1 - Representative spectrum analyzer plot

Figure E.2 gives a representative spectrum analyzer set-up.

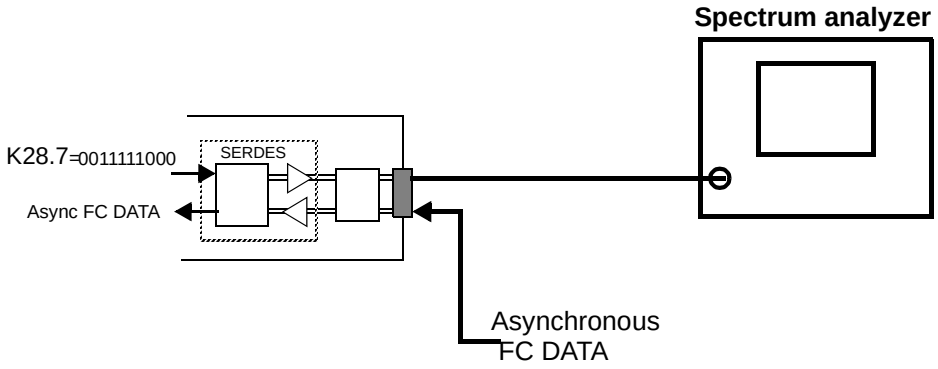

Figure E.2 - Frequency domain test setup (spectrum analyzer)

The spectrum analyzer provides considerable information to the tester, but for compliance testing, it is rather tedious and no process has yet been documented for a level 1 application. Software assistance is required to filter the information. The appropriate methodology is to filter out the low-frequency jitter, extract the deterministic jitter that is peak-to-peak and determine a RMS value for the random jitter and add

Copyright International Organization for Standardization
Provided by IHS under license with ISO
No reproduction or networking permitted without license from IHS Not for Resale

the peak-to-peak deterministic jitter with 14X random jitter RMS value. With this process, correlation to time domain measurements has been obtained.

E.2 Frequency domain measurement algorithm

The conversion process for evaluating the rms phase jitter from clock like data is summarized in table A.1.

Table E.1 - Frequency domain conversion

Spectrum	Description	Dimensions
Random phase jitter		
$S_1(f)$	Spectrum Analyzer Output	dBm
$S_2(f) = S_1(f) - dBm(carrier)$	Spectrum Relative to Carrier	dBc
$S_3(f) = S_2(f) - 10\log(f_{NBW})$	Spectrum Adjusted for Noise Bandwidth	dBc/Hz
$S(f) = 10^{\frac{S_3(f)}{10}}$	Spectrum of Phase Noise	rad^2/Hz
$\overline{\Phi^2} = 2 \cdot \int_{SB} S(f)df$, $\Phi_{rms} = \sqrt{\overline{\Phi^2}}$ SB is the single sided spectrum from the fundamental	Mean Square Phase Noise	rad^2
$J_{rms} = \frac{\Phi_{rms}}{2\pi f_c}$ where f_c is the carrier frequency, not the data rate	Time Domain RMS Phase Jitter	s
For RJ: $rms_UI = J_{rms} \times data_rate$	Time Domain RMS Phase Jitter	UI

If the spectrum analyzer output may be stored digitally, software may be written to evaluate these equations and apply low- or high-pass filters to ignore certain components of jitter. The spectrum analyzer displays the frequency spectrum, $S_1(f)$, of the phase noise with dimensions of (dBm). The carrier amplitude is subtracted to come up with the spectrum relative to the carrier, $S_2(f)$, with dimensions of (dBc). This is then adjusted for the noise bandwidth of the spectrum analyzer to get the noise power density $S_3(f)$ in dBc/Hz. Failing that capability, f_{NBW} may be be determined either experimentally (by measuring a noise source with known power per Hz) or by consulting the spectrum analyzer's specifications. (Depending on the filter/window shape, the factor could range from 1,1 to 1,4.) Otherwise, f_{NBW} may be measured, or approximated by multiplying the resolution bandwidth f_{RBW} by a shape dependent correction factor (typically about 1,2). $S_3(f)$ is then converted to units of rad^2/Hz before performing the integration to obtain the mean-square phase noise[1]. Taking the square root yields the rms phase noise, Φ_{rms}, (rad). This rms phase noise is equivalent to an rms time jitter J_{rms} (s) that is a function of the carrier frequency (f_c).

If there are deterministic jitter components in the signal, such as narrow-band frequency modulation (PJ), they are handled differently than above PJ sideband level, dBc. PJ components in the spectrum shall be removed from the integration and calculated separately before being added to the total contribution of jitter.

All PJ components are defined as single-sided spectra. If there is more than one PJ component, they are all evaluated separately. Then the total rms jitter is calculated by square rooting the sum of the squares of

1. D. H. Wolaver, Phase-Locked Loop Circuit Design, Englewood Cliffs, NJ: Prentice Hall, 1991 [41]

Copyright International Organization for Standardization
Provided by IHS under license with ISO
No reproduction or networking permitted without license from IHS Not for Resale

all the rms values assuming the terms are uncorrelated. Table A.2 summarizes the periodic jitter conversion.

Table E.2 - Frequency domain conversion

Periodic jitter		
Spectrum	**Description**	**Dimensions**
For PJ: $\Phi_{rms} = \sqrt{2}\times 10^{(-x)/20}$ where x is the dB delta between the carrier and PJ is the sideband level.	rms Phase	radians
$\text{rms_seconds} = \Phi_{rms}/(2\pi \times \text{f_c})$ where f_c is the carrier frequency, not the data rate	Time Domain rms Jittter	s
$\text{pp_seconds} = 2\sqrt{2} \times \Phi_{rms}/(2\pi \times \text{f_c})$	Time Domain peak-to-peak Jitter	s
$\text{pp_UI} = \text{pp_seconds} \times \text{data_rate}$	Time Domain peak-to-peak Jitter	UI

The first equation used for PJ in table A.2 is a good small-angle approximation for jitter, which is a valid assumption in most cases. Bessel functions (not described here) are exact, where the ratio between the jitter (sideband) and the tone frequency (carrier or f_c) magnitudes is the ratio of J1 to J0, and jitter is related to the beta (the modulation index) as:

$$\text{UI_pp} = (\text{beta} \times \text{data_rate})/(\pi \times \text{f_c})$$

The spectrum analyzer approach provides good diagnostic information. For example, one may see spurs at frequencies that correspond to frequencies on the card. If the spur is considerable then some coupling is occurring that the system designer may isolate.

Copyright International Organization for Standardization
Provided by IHS under license with ISO
No reproduction or networking permitted without license from IHS Not for Resale

Annex F
(informative)

Positioning of jitter eye mask relative to the data

F.1 Introduction

In order to determine compliance with jitter eye mask specifications it is necessary to position the mask with respect to the observed data. Receivers adjust their internal timing references (recovered clocks) based on the properties of the incoming data stream. Because there are delays associated with the response time of the internal receiver circuitry and because the positioning of the internal receiver timing reference depends on the data pattern, the positioning of the mask used for signal compliance may not match the way the receiver sets its internal timing reference.

The primary effect of receiver response time and sinusoidal tracking are addressed through the use of the Golden PLL as the jitter timing reference. The response to the actual distribution of jitter, however, is presently only loosely specified through the specification of TJ and DJ. There are many different distributions that result in the same value of DJ and TJ.

In order to have the signal quality measurement accurately track the BER performance in a receiver it is necessary to know how the receiver responds to different jitter distributions. Ideally, attaining this goal requires that the receiver response be known and constrained. As of the publication of MJSQ some progress has been made as described in this annex. However, since receiver designers demand a certain degree of proprietary design content, no agreements have been reached concerning how to restrict the receiver responses to different jitter distributions.

F.2 Peak-to-peak vs mean

The two most obvious features of distributions are the mean and the peak-to-peak TJ (at CDF=1E-12). It may be easier to determine the mean than the peak-to-peak TJ values for some measurement methods. For others, such as a BERT, it may be easier to find the peak-to-peak TJ.

Examples are known where the simple mean of the distribution is almost meaningless in terms of describing the important parts of the distribution or how a receiver uses the signal. Other examples may be provided where the receiver uses the mean as the basis for centering its internal timing. Without knowledge of how the receiver uses the distribution a definitive answer is not possible and an average of the peaks mask positioning method may be at least as valid as any based on the mean in terms of relating to link bit errors.

Figure A.1 shows a mask that was positioned based on the mean of the distribution. If the distribution is symmetrical as in distributions 1 or 2, then the mean of the population is the same as the average of the peak positions. If the distribution is asymmetrical as in distributions 3, 4 and 5, then the mean of the population may be significantly different from the average of the peaks.

If the masks had been positioned as shown (based on the mean) distribution 3 would have many incursions into the eye from the right tail and virtually none from the left side. If the masks had been positioned at the average of the peaks for distribution 3 very few incursions would be seen on either side. The positioning of the mask can be critical in determining pass/fail.

Distributions 4 and 5 are shown as other examples of asymmetrical distributions.

Copyright International Organization for Standardization
Provided by IHS under license with ISO
No reproduction or networking permitted without license from IHS Not for Resale

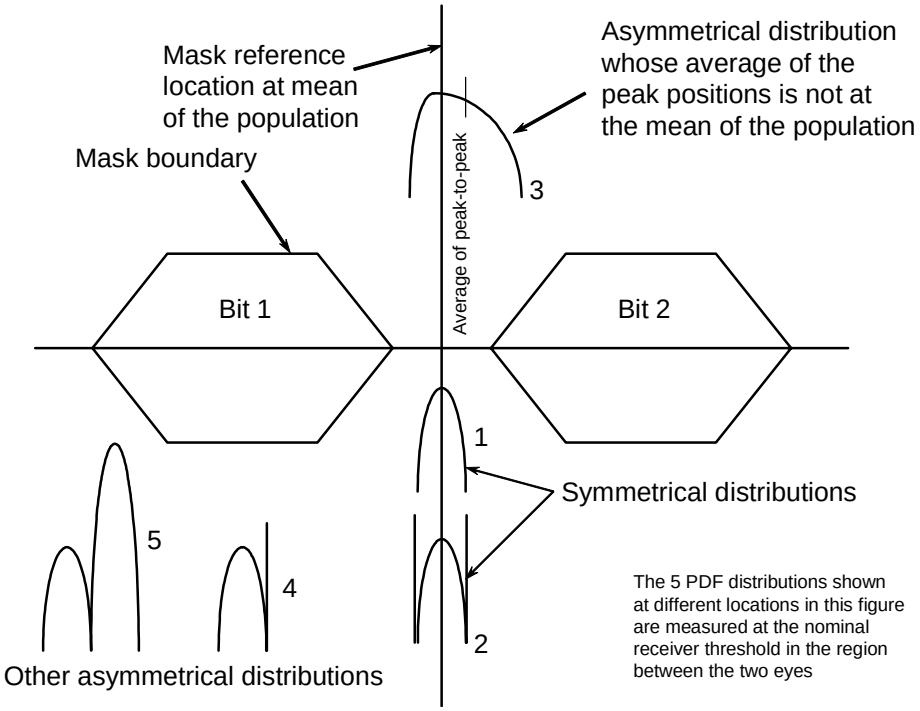

Figure F.1 - Examples of jitter distributions

F.3 Restrictions on jitter distributions

Restrictions that might be considered for jitter distributions (in addition to those already imposed by the DJ and TJ budget), are, for example, requiring that the actual jitter distribution in a compliant signal have a mean that is approximately the same as the average of the peak values or, in another example, requiring that the mean not vary more than a certain amount for different data patterns.

F.4 Jitter tolerance and jitter output issues

The effect of the jitter distribution on the receiver tolerance test is also important. Examination of MJS-1 provides a possible starting point where it is implicitly suggested that there is no DCD and no BUJ (other than the impressed sinusoidal) present in the signal launched toward the receiver in the tolerance test. Further, the DDJ is created by a cable or filter having certain unspecified frequency transfer properties. If the properties of the cable or filter used to create the DDJ were specified, this scheme could provide some requirements for the jitter distribution used for defining the tolerance conditions.

However, even by using a specified cable or filter as part of the jitter tolerance specification, there is still an issue with the fact that the jitter output does not have any distribution requirements explicitly specified (other than TJ and DJ). Use of golden hardware to create portions of the DJ for the tolerance test carries an implied distribution provided that good specifications exist for the golden hardware. Therefore, one could have a link that passes the jitter tolerance test based on the controlled distribution described above but the same link could fail using a compliant output signal with a different distribution.

Copyright International Organization for Standardization
Provided by IHS under license with ISO
No reproduction or networking permitted without license from IHS Not for Resale

It appears that there are only two approaches that are capable of resolving this conflict between jitter output and jitter tolerance signal measurements

a) require the jitter output distribution to be a benign subset of the required jitter tolerance distribution or,
b) require that the tolerance test be done for any physically realisable output distribution with the specified peak-to-peak properties.

MJSQ makes this issue visible but does not attempt to resolve it. This is another topic for MJSQ-2.

F.5 Special consideration for optical delta T points

For the special case of delta T points used with optical transceivers the following strategy is suggested.

Optical specifications (OFSTP-4A [8]) require locating the mean of the jitter histogram at the eye mask reference locations. This places a limit on the peak of each side of the jitter distribution to be no more than half of the maximum allowable jitter.

Based on this assumption, delta T specifications in FC-PI require a symmetrical distribution if the maximum allowed total jitter is actually being delivered in the signal. If less than the maximum total jitter is delivered then an amount of the asymmetry may be present in the signals such that the total jitter plus the asymmetry does not exceed the allowed maximum total jitter.

Jitter peak-to-peak measured < [TJ max - |Asymmetry|]

The numerical difference between the average of the peaks (at 10^{-12} BER) and the average of the individual events is the measure of the asymmetry.

F.6 Summary

The following summarizes the present status and is based on motions taken in the working group and other comments.

a) The positioning of the mask with respect to the data is not presently specified with respect to different jitter distributions nor is the positioning uniformly practiced. It is common to find people using the features of the distribution that best suits their application. The choice of method is expected to have consequences on actual pass/fail for practical applications. How the receiver centers itself is a key part of this issue.
b) All measurements and budgeting are based on the assumption that the receiver sets its internal timing reference from the mean time of the transitions (i.e. the mean of the jitter distribution) at the nominal signal threshold. Receivers that do not behave in this manner may not work with the signal budgets developed.
c) The jitter output specification implicitly allows time translation of the mask to obtain a fit. This implies that the 10^{-12} edges of the distribution are available at different signal levels.
d) There is an expected difference between the jitter output and jitter tolerance performance of worst case receivers due partly to response to different jitter distributions.
e) In all cases a specified set of data patterns shall be used to determine compliance and these data patterns shall include contiguous streams of idle primitives.

The above status is different from SFF-8410 [23] for copper cable assemblies, SFF-8412 [25] for optical cable assemblies, OFSTP-4A [8] for optical signal measurements, 10 GFC [2] and 10 GBE [3] where use of the mean of the population that crosses the nominal receiver threshold level is stated as the reference for positioning the mask.

--`,,```,,,,````-`-`,,`,,`,`,,`---

Copyright International Organization for Standardization
Provided by IHS under license with ISO
No reproduction or networking permitted without license from IHS Not for Resale

Annex G
(informative)

Crosstalk jitter components

G.1 Overview

The purpose of this annex is to document measurements where jitter in the link signals is partly caused by crosstalk from an adjacent channel. An example is a FC (Fibre Channel) bi-directional transceiver interface. In such a duplex interface the two signals are travelling in opposite directions and are running different data at, in most cases, slightly different speeds.

Crosstalk from the adjacent channel causes jitter that is defined in 7.2.3.4 as “BUJ”. BUJ or bounded uncorrelated jitter, up until recently, was not directly measurable/separable from the deterministic jitter occurring on a running data channel without measuring the channels jitter with and without the crosstalk channel running.

This annex shows several techniques that enable the user to measure a running FC channel and determine how much of the jitter is caused by energy uncorrelated with the data pattern.

G.2 Equipment set-up

For this BUJ study the Wavecrest DTS-2077 was used to measure the BUJ, the HP70841B pattern generator to generate the FC signal, and the Tek, gigaBERT 1400 pattern generator with a power coupler, 20 dB attenuator and HP AC coupling adapter to introduce a measured amount of crosstalk at an FC rate. See figure A.1.

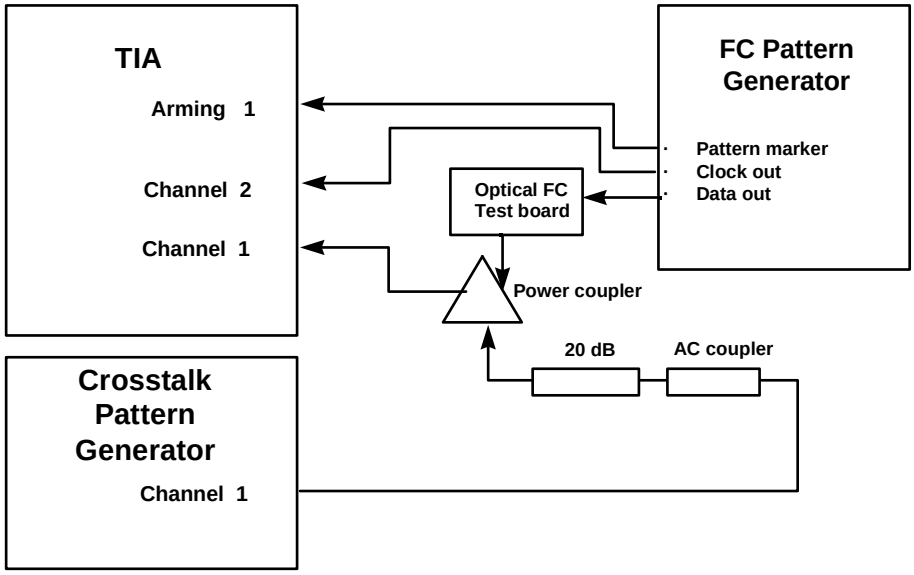

Figure G.1 - Equipment setup

In this test the FC pattern generator was setup to generate a PRBS 2^7-1 pattern with a bit clock and pattern marker connected as shown in figure G.1 at 1,062 5 Gbps. An “Optical FC test board” was used to receive and generate an electrical FC signal. On the board an optical loop back was used to generate RJ. The bit

Copyright International Organization for Standardization
Provided by IHS under license with ISO
No reproduction or networking permitted without license from IHS Not for Resale

clock was used by the TIA only when eye histogram (clock to data) data was being taken. The pattern marker was used by the TIA when all other tests were run.

The pattern generator was setup to generate the crosstalk signal that was a 1,062 5 Gbps signal running a PRBS 2^{15}-1 pattern. This crosstalk signal was totally asynchronous with the main FC signal by virtue of the fact that the time bases where different and that the data running was different. The crosstalk signal output was AC coupled to the FC data signal through a 20 dB attenuator and 50 Ω power coupler. The power coupler was connected directly to the input of the DTS with the 20 % attenuator connected directly to the other leg of the power coupler. The AC coupler was connected directly to the other end of the 20 % attenuator. (This connection was done to eliminate the reflections through the coupler seen on the FC signal caused by not putting proper termination close enough to the other leg of the coupler.)

The amplitude of the FC data signal from the test board was 0,5 V after the coupler while the clock amplitude was set to 1,0 V. The amplitude of the crosstalking FC signal was varied to give three different amplitudes of crosstalk out of the power coupler; Zero, 50 mV and 100 mV.

G.3 Measurement set-up

This study of BUJ effects caused by crosstalk was split into three parts

1) Measure the timing components of the FC channel with zero crosstalk.
2) Measure the FC channel with 50 mV of crosstalk.
3) Measure the FC channel with 100 mV of crosstalk.

For each of the three crosstalk amplitudes three measurements where performed on the FC signal to capture changes to the signal generated by crosstalk.

Oscilloscope plot.

a) Eye histogram plot (in this annex, a jitter distribution plot of the rising and falling edges with respect to a bit clock).
b) Histogram of 25 consecutive edges of the data signal.

G.4 Results for test 1 (zero crosstalk added)

The following plots where taken from the TIA using the appropriate software. Zero crosstalk is being added to the FC channel.

Copyright International Organization for Standardization
Provided by IHS under license with ISO
No reproduction or networking permitted without license from IHS Not for Resale

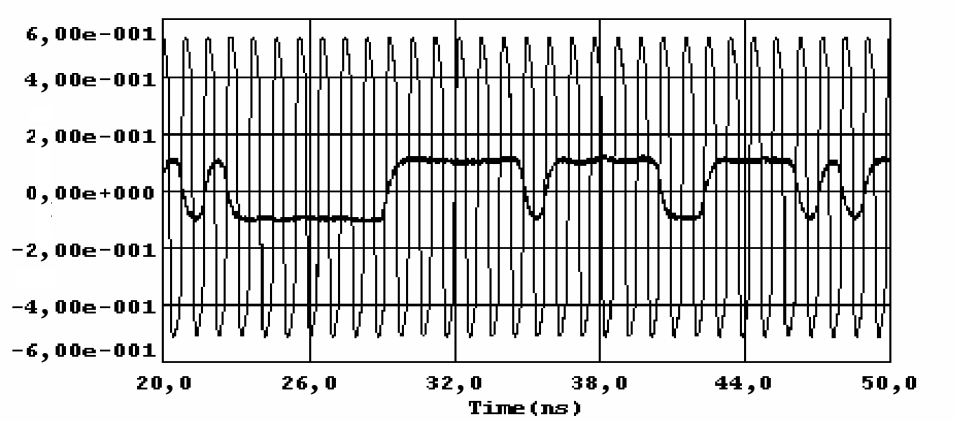

Chan	Pk-Pk	Maximum	Minimum	Middle	r.m.s.
1	0,235 6	0,122 8	-0,112 8	0,005 0	0,091 7
2	1,052 9	0,537 2	-0,515 7	0,010 8	0,437 0

Figure G.2 - Voltage versus time output of FC test board

This is a *scope* picture of the output of the FC test board as seen by the TIA. The FC data signal after passing through the power coupler and the 1,062 5 GHz clock signal from FC pattern generator are shown. The trigger for figure A.2 is the pattern marker being generated by the FC pattern generator.

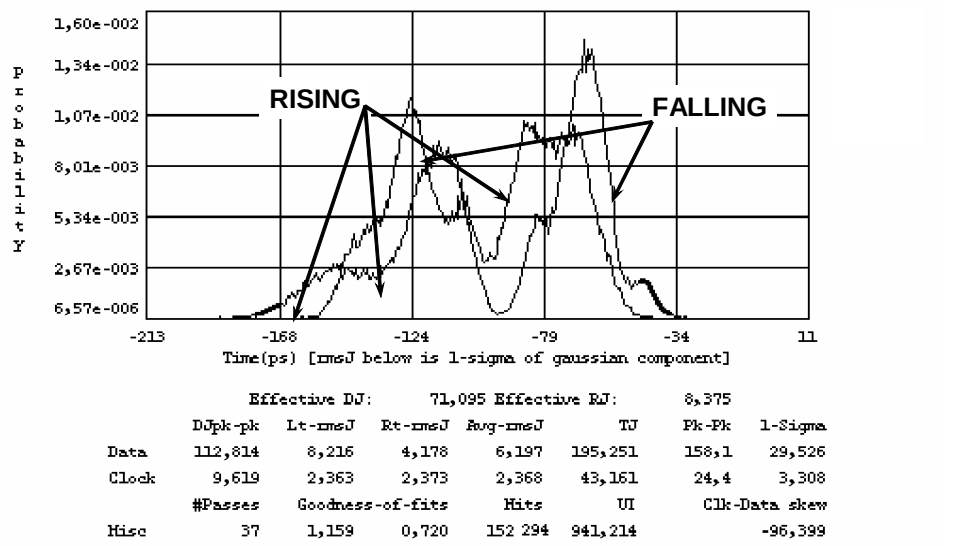

Effective DJ: 71,095 Effective RJ: 8,375

	DJpk-pk	Lt-rmsJ	Rt-rmsJ	Avg-rmsJ	TJ	Pk-Pk	1-Sigma
Data	112,814	8,216	4,178	6,197	195,251	158,1	29,526
Clock	9,619	2,363	2,373	2,368	43,161	24,4	3,308
	#Passes	Goodness-of-fits		Hits	UI	Clk-Data skew	
Misc	37	1,159	0,720	152 294	941,214	-96,399	

Figure G.3 - Clock to data transfer characteristic

Figure A.3 is an eye histogram of the clock to data transfer characteristics for both the rising and falling edges of data with respect to the rising edge of clock.

Copyright International Organization for Standardization
Provided by IHS under license with ISO
No reproduction or networking permitted without license from IHS Not for Resale

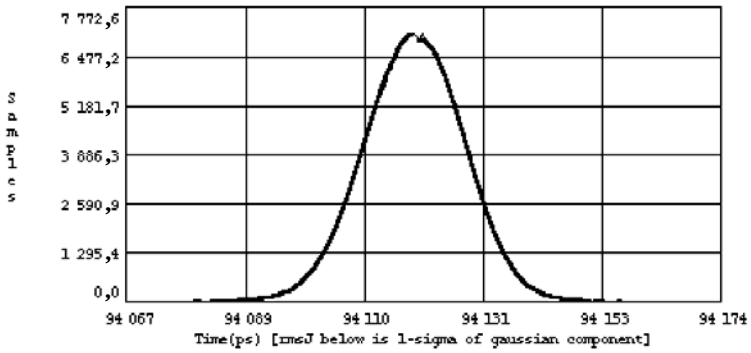

Effective DJ: 8,842 Effective RJ: 8,401

DJpk-pk	Lt-rmsJ	Rt-rmsJ	Avg-rmsJ	TJ	Hits	#Passes
20,215	8,842	8,152	8,497	142,109	256 000	8
Average	Goodness-of-fits		1-Sigma	Pk-Pk	Maximum	Minimum
94 119,0	1,280	0,942	8,71	76,3	94 155,9	94 079,6

Figure G.4 - Distribution of the rising edges with no crosstalk

Figure A.4 shows the histogram of the 25th rising edge out from the beginning of the PRBS 2^7-1 data pattern. Figure A.4 is used as a reference for later similar plots where crosstalk has been added. The important parameters are the DJ and Avg-rmsJ (RJ) numbers. (Theoretically, in this type of plot only uncorrelated jitter is reported. The DJ values in this plot are therefore uncorrelated and represent BUJ. Consequently, the 20,2 ps of DJ reported in figure A.4 is a measure of the baseline BUJ for the FC test board.)

The 25th edge was picked because it was well into the flat spot of the autocorrelation making it roughly representative of the RJ trend. If further work were to be done on this BUJ test method it would be necessary to take the variance of each bin and do an FFT, then rms the results from the Nyquist to f_c/1667.

G.5 Results for test 2: (50 mV of crosstalk added)

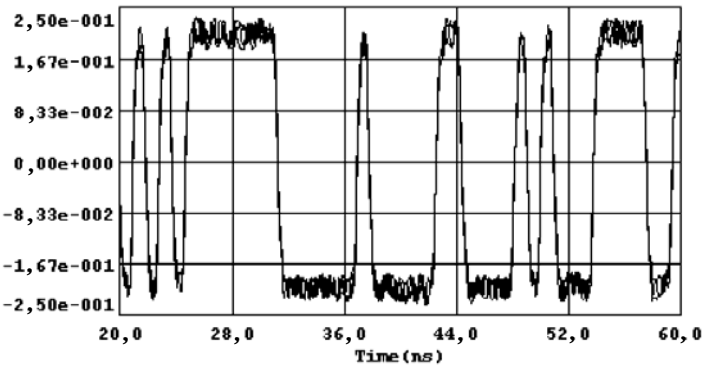

Chan	Pk-Pk	Maximum	Minimum	Middle	r.m.s.
1	0,468 7	0,235 1	-0,233 6	0,000 8	0,186 2

Figure G.5 - Output of FC test board with 50 mV crosstalk added

Copyright International Organization for Standardization
Provided by IHS under license with ISO
No reproduction or networking permitted without license from IHS
Not for Resale

Figure A.5 is the same as figure A.2 with addition of 50 mV of crosstalk.

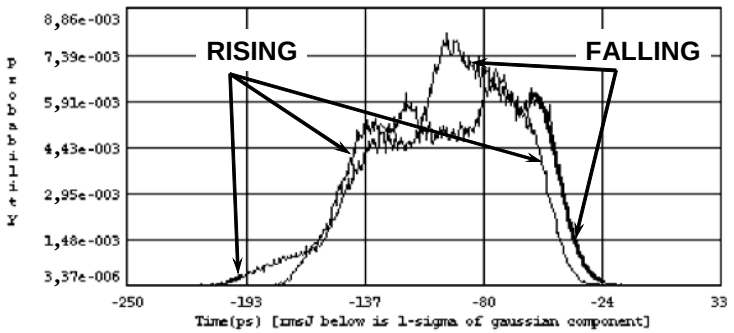

	Effective DJ:			66,072 Effective RJ:		11,637
	DJpk-pk	Lt-rmsJ	Rt-rmsJ	Avg-rmsJ	TJ	Pk-Pk	1-Sigma
Data	122,383	9,704	11,359	10,531	265,627	200,2	33,345
Clock	8,748	2,584	2,311	2,447	43,538	22,0	3,206
	#Passes	Goodness-of-fits		Hits	UI	Clk-Data skew	
Misc	72	0,357	1,770	296 526	941,216	-97,154	

Figure G.6 - Jitter distributions for the rising and falling edges

Notice in the *eye histogram* how the DJ and Avg-rmsJ reported in figure A.6 compared to the values reported in figure A.3. (DJ from crosstalk = (122,4 ps – 112,8 ps = 9,6 ps), RJ went from 6,2 ps to 10,5 ps). The already large amount of DJ in the system only increased marginally due to the BUJ caused by the crosstalking FC channel.

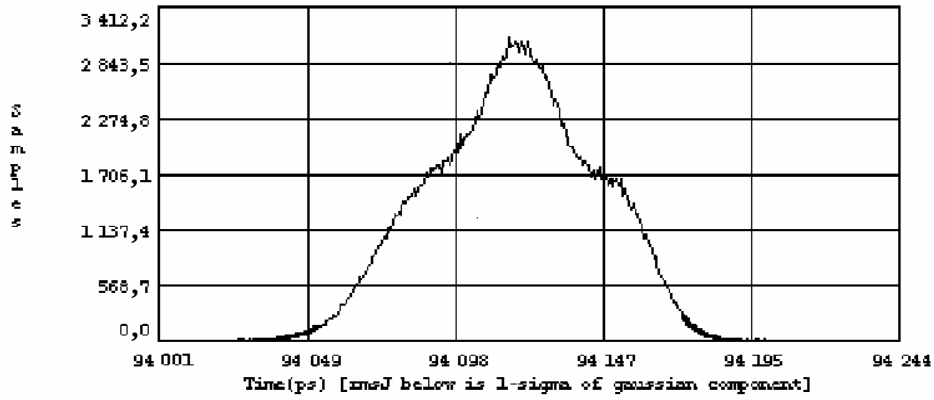

	Effective DJ:		57.144 Effective RJ:		11.688	
DJpk-pk	Lt-rmsJ	Rt-rmsJ	Avg-rmsJ	TJ	Hits	#Passes
94,525	11,650	7,603	9,627	224,617	320 000	10
Average	Goodness-of-fits		1-Sigma	Pk-Pk	Maximum	Minimum
94 117,4	1,560	0,897	26,5	173,3	94 200,4	94 027,1

Figure G.7 - Same as figure A.4 with 50 mV crosstalk added

Copyright International Organization for Standardization
Provided by IHS under license with ISO
No reproduction or networking permitted without license from IHS
Not for Resale

Figure A.7 is the same as figure A.4 except with the addition of 50 mV crosstalk. Take note of the DJ and Avg-rmsJ reported in figure A.7 versus the one in figure A.4. Notice the significant increase in DJ. All of the DJ reported in this type of plot contains only BUJ. Whereas in the eye histograms figure A.3 and figure A.6 correlated as well as uncorrelated DJ is being measured. (DJ from crosstalk = (94,5 ps – 20,2 ps = 74,3 ps), the RJ increased by approximately 1 ps rms.)

G.6 Results for test 3: (100mV of crosstalk added)

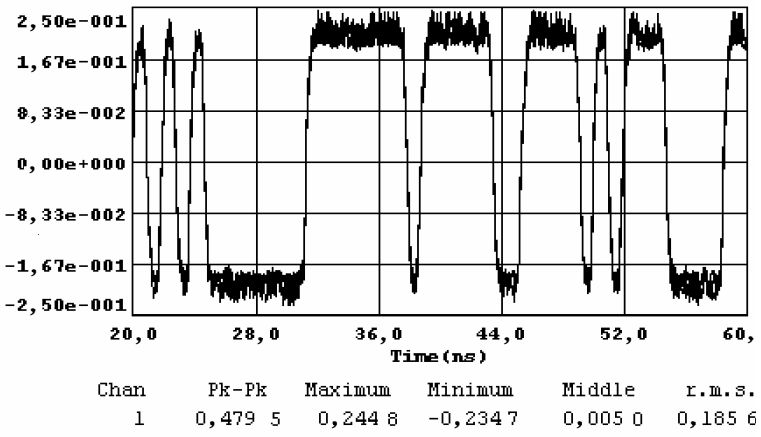

Chan	Pk-Pk	Maximum	Minimum	Middle	r.m.s.
1	0,479 5	0,244 8	-0,234 7	0,005 0	0,185 6

Figure G.8 - Output of FC test board with 100 mV crosstalk added

Figure A.8 shows the crosstalk increase over that shown in figure A.2 and figure A.5.

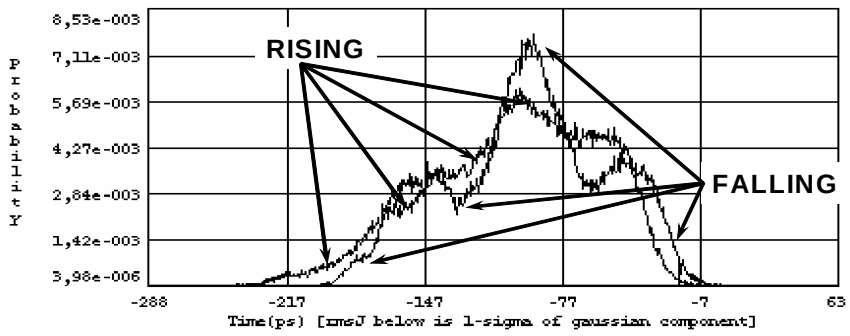

Effective DJ: 103,858 Effective RJ: 11,433

	DJpk-pk	Lt-rmsJ	Rt-rmsJ	Avg-rmsJ	TJ	Pk-Pk	1-Sigma
Data	183,612	12,176	6,941	9,559	309,689	246,0	41,708
Clock	9,619	2,363	2,373	2,368	43,161	24,4	3,308
	#Passes	Goodness-of-fits		Hits	UI	Clk-Data skew	
Misc	61	0,878	0,519	250 957	941,214		-98,260

Figure G.9 - Jitter distributions with 100 mV crosstalk

Copyright International Organization for Standardization
Provided by IHS under license with ISO
No reproduction or networking permitted without license from IHS
Not for Resale

Figure A.9 shows further increase in DJ while Avg-rmsJ is remaining virtually unchanged. (DJ from crosstalk = (183,6 ps – 112,8 ps = 70,8 ps), RJ is virtually unchanged). In this eye histogram type of plot both correlated and uncorrelated DJ are being measured.

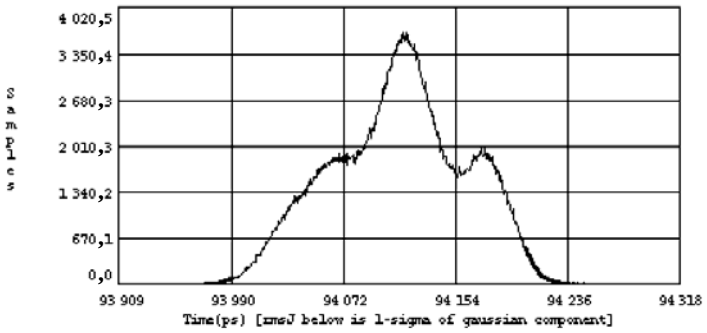

Effective DJ: 99,751 Effective RJ: 12,224

DJpk-pk	Lt-rmsJ	Rt-rmsJ	Avg-rmsJ	TJ	Hits	#Passes
186,736	9,844	12,048	10,946	333,284	608 000	19
Average	Goodness-of-fits		1-Sigma	Pk-Pk	Maximum	Minimum
94 113,1	1,053	0,750	48,3	277,1	94 248,0	93 970,9

Figure G.10 - Same as figure A.4 with 100 mV crosstalk added

Compare the DJ and Avg-rmsJ in figure A.10 to that of figure A.4 and figure A.7. Notice the steady increase in DJ as the crosstalk is increased while Avg-rmsJ remains constant. (DJ from crosstalk = (186.7 ps – 20,2 ps = 166,5 ps), while RJ is unchanged). In these plots only the uncorrelated DJ is being measured.

G.7 Combined results

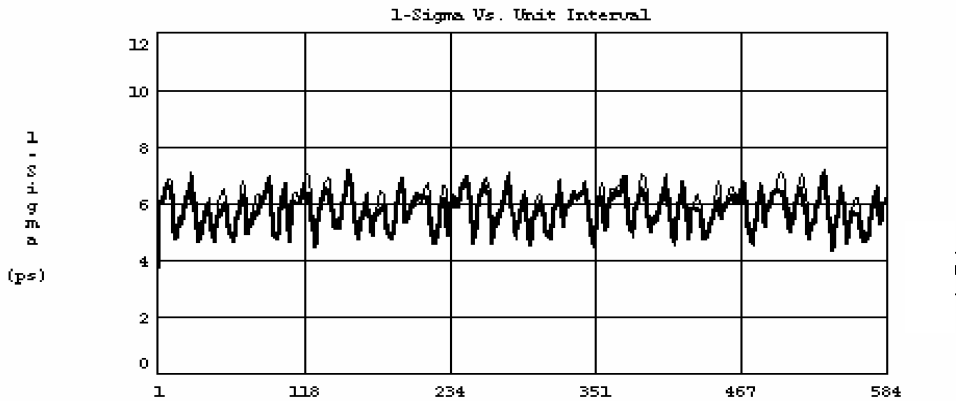

Effective DJ: 56,454 Effective RJ: 6,632

	DCD+DDJ	PJpk-pk	DJpk-pk	RJ(1sigma)	TJ	Pass/Hits
Latest(ps)	97,373	6,870	104,243	5,754	177,874	1
Combined(ps)	97,373	6,870	104,243	5,754	177,874	800 000

Figure G.11 - Base line plot with zero crosstalk added

Copyright International Organization for Standardization
Provided by IHS under license with ISO
No reproduction or networking permitted without license from IHS
Not for Resale

The “1-sigma / tail fit Vs. Unit Interval” plot shown in figure A.11 is a base line plot of the FC channel with zero crosstalk added. This plot is showing the 1-sigma / tail fit of the Variance at each UI being measured out to 637 kHz. In figure A.11 the thin trace is the 1-sigma of the autocorrelation and the thick trace is the tail fit 1-sigma value overlaid on it. The value 1-sigma is the square root of the variance seen at each UI, relative to the edge referenced to the pattern marker. The tail-fit records are applying the best-fit-of-tails methodology to each crossing in a clock-to-data acquisition.

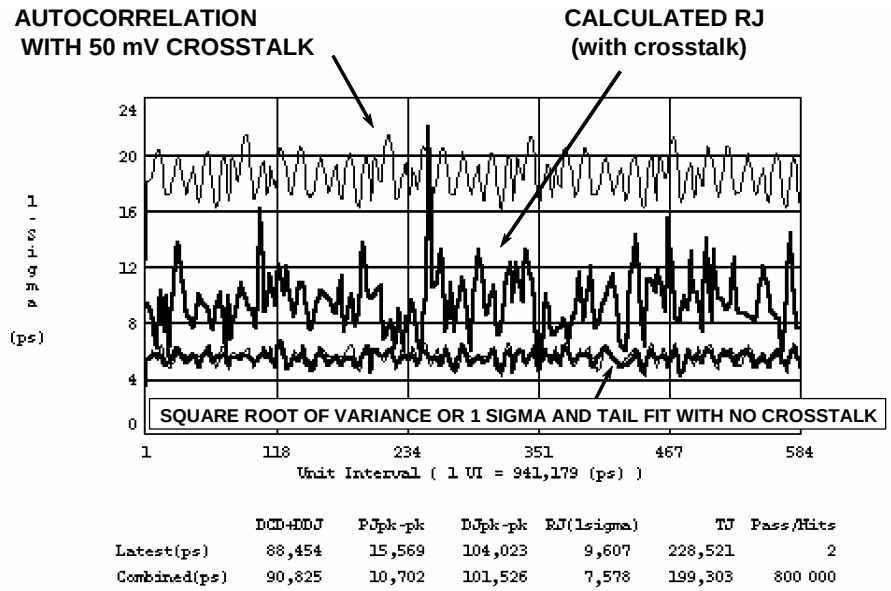

	DCD+DDJ	PJpk-pk	DJpk-pk	RJ(1sigma)	TJ	Pass/Hits
Latest(ps)	88,454	15,569	104,023	9,607	228,521	2
Combined(ps)	90,825	10,702	101,526	7,578	199,303	800 000

Figure G.12 - Overlay of results with and without crosstalk added

Figure A.12 is similar to figure A.11 except that figure A.12 is an overlay of the signal on the FC channel both with and without 50 mV of crosstalk applied. Notice the separation between the thick trace at the bottom and the thin trace near the top of figure A.12. The thick trace represents the real RJ as affected by the crosstalk. The top trace represents the 1-sigma of the autocorrelation with 50 mV of crosstalk added. It is interesting to note that the RJ increases some small amount due to the presence of the 50 mV of crosstalk. Further investigation is required to determine the cause of this increase and why the RJ with crosstalk has so much structure.

Copyright International Organization for Standardization
Provided by IHS under license with ISO
No reproduction or networking permitted without license from IHS
Not for Resale

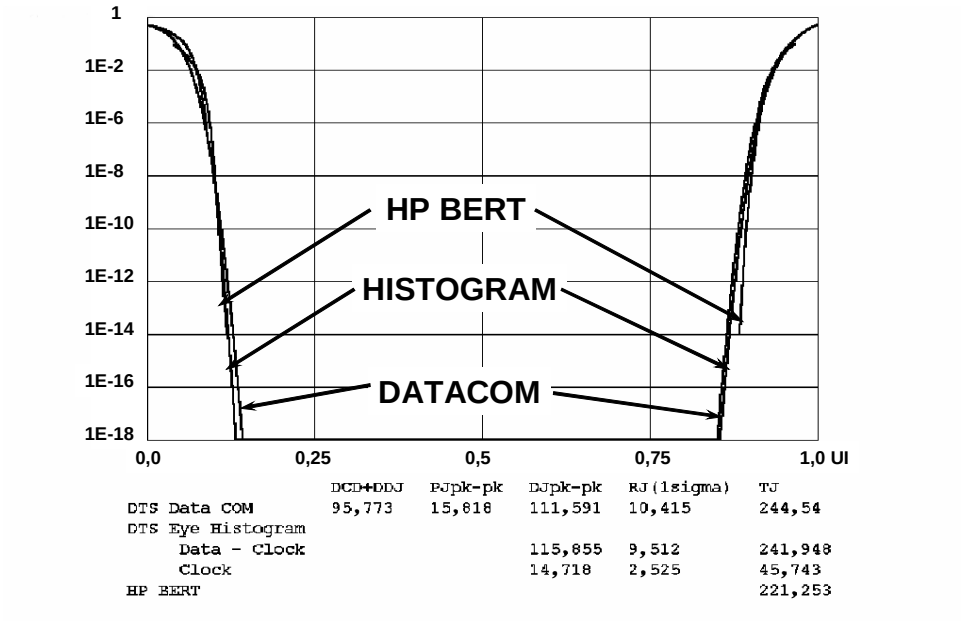

	DCD+DDJ	PJpk-pk	DJpk-pk	RJ(1sigma)	TJ
DTS Data COM	95,773	15,818	111,591	10,415	244,54
DTS Eye Histogram					
Data - Clock			115,855	9,512	241,948
Clock			14,718	2,525	45,743
HP BERT					221,253

Figure G.13 - Correlation between CDFs from three methods

Figure A.13 shows correlation results between the HP BERT and the two test routines from Wavecrest, the eye histogram and datacom. The results are overlayed to show close correlation between the three different approaches. The test condition was with 50 mV of applied crosstalk as defined above. The small remaining differences may be attributable to the extrapolation details used. See Annex A.

G.8 Conclusions

Crosstalk jitter manifests itself as a form of deterministic jitter (DJ). This means its effects on the signal edge timing are bounded and contribute to the overall DJ in the signal. In other words, the crosstalk jitter sums with the DJ produced by the channel itself to inflate the reported DJ and Total Jitter (TJ) for the signal. Since only the DJ is presently used for compliance purposes the crosstalk induced BUJ is a level 2 quantity.

In the histogram with tail fit at 25 UI into the pattern, the increase in RJ is attributed to the RJ of the crosstalking signal combining with the RJ of the signal we are looking at. This would create a multi-Gaussian RJ. The crosstalk pattern generator used for this experiment had greater RJ (although not documented for this experiment) than the FC signal generator used for the main signal.

Other suggestions are that the crosstalk pattern was PRBS15, which has a DJ ceiling somewhat lower than the FC test patterns, depending the measurement depth of some of the approaches. But it might be, as discussed in Annex A, that the curve fitting and extrapolation did not reach down low enough. Another thought is that the crosstalk had some non-periodic component that was bounded but did not show up as a PJ peak. The reported RJ would be higher due to the non-periodic DJ remaining after removing the PJ peaks.

In the eye histogram datacom measurements, the cause of the increase of the RJ would be the same multi-Gaussian RJ increase seen with the histogram with tail fit at 25 UI, except the 10,5 ps RJ on the 50 mV crosstalk test remains unexplained. This does not alter the basic conclusion.

Copyright International Organization for Standardization
Provided by IHS under license with ISO
No reproduction or networking permitted without license from IHS Not for Resale

It is possible to measure BUJ in two ways. One is to measure the DJ for a particular FC path with the crosstalk channel turned off, and then measure the DJ again with the crosstalk channel turned on. The difference between the two DJs is the BUJ. The user may use the TIA eye histogram tool if a bit clock is available or the datacom tool if a pattern marker is available to perform this test.

The datacom technique is able to measure the BUJ on a running FC channel while the crosstalk channel was turned on. To do this apply the tail fit algorithm to the variance record taken in datacom for RJ and PJ separation. By plotting the DJ separated in the tail fit algorithm the user is able to compare the DJ measured by tail fit that includes BUJ, from the DJ measured in the “DJ routine” built into datacom that does not include BUJ. The difference between the two DJ numbers is the BUJ contribution from the adjacent channel.

The datacom is able to measure and separate the bounded uncorrelated jitter (BUJ) that is uncorrelated to the data pattern from the deterministic jitter (DJ) produced by the channel itself that is correlated to the data pattern.

The eye histogram, datacom with a pattern marker and the BERT correlate well to one another in the presence of crosstalk.

In the future, instruments could provide the BUJ number in addition to the DCD, DDJ, PJ and RJ jitter components measured.

Further study on the effects of using a Golden PLL is recommended.

--`,,```,,,,````-`-`,,`,,`,`,,`---

Copyright International Organization for Standardization
Provided by IHS under license with ISO
No reproduction or networking permitted without license from IHS Not for Resale

Annex H
(informative)

Developing a signal budget at connectors

H.1 Introduction

Situations arise frequently where new interoperability points may be desired between interoperability points that have already been established. A simple example is where specifications at chip pads exist and it is desired to create a specification at separable connectors near the chip pads. The conditions considered in this annex assume that specifications exist at the Alpha points and that it is desired to add connectors to produce a Gamma point external copper connection.

For example, the Ethernet XAUI specifications apply at the chip pins (the Alpha points) but the FC specifications apply at the connectors. In order to use XAUI chips in a compliant FC application it is required to develop a signal budget at the connector by modifying the specifications that apply at the Alpha points.

H.2 Physical architecture

An illustration of the basic interface produced by adding a Gamma connector to a transmission path specified by Alpha T and Alpha R is shown in figure A.1.

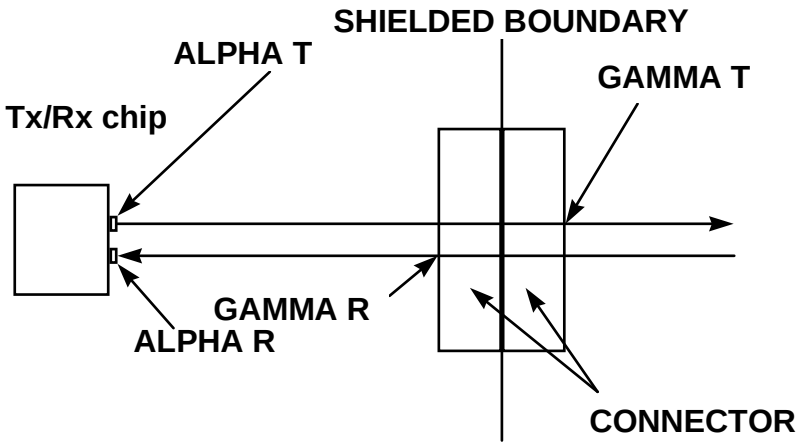

Figure H.1 - One end of a duplex link with added connector

H.3 Options for connectors other than Gamma

Figure A.2 shows four different constructions that could be implemented with the same chips where the desirable budget at the connectors is different depending on the application. The relative portion of the budget allocated to the different parts of the link is shown by the weight of the arrowed lines.

The blade-to-blade applications assumes that the blade connectors on the backplane are separated from each other approximately by the same distance as the chip to connector on the blades. An approximately equal budget is needed for each of the three portions of the link in this case.

Copyright International Organization for Standardization
Provided by IHS under license with ISO
No reproduction or networking permitted without license from IHS Not for Resale

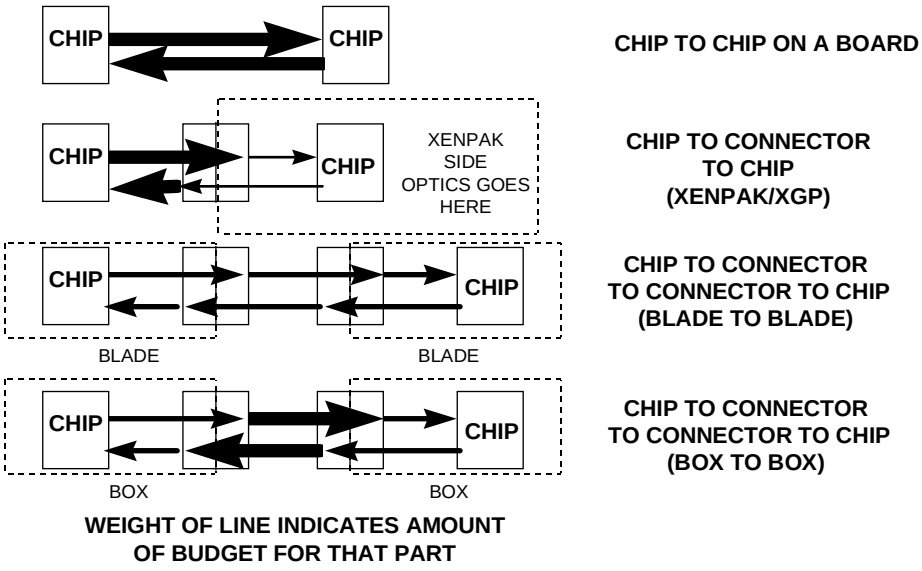

Figure H.2 - Signal budgeting options

H.4 Determining the budgets when using a compliance interconnect methodology

If a compliance interconnect method is used to specify the transmitter (see [19]) an S21 magnitude mask specfies the lowest loss load allowed between the transmitter and the receiver device. If the transmitter is capable of passing the signal though higher loss loads then the transmitter is better than required. Part of the loss occurs between the Alpha T point and the Gamma T point and between the Gamma R point and the Alpha R point. The loss between the Gamma T point and the Gamma R point is less than between the Alpha T and Alpha R points. In order to accommodate this Alpha T to Gamma T loss and the Gamma R to Alpha R loss the signal at the Gamma T point is required to drive through a load that has less loss than the load for the Alpha T point.

The amplitude and jitter specifications for the Gamma T point are identical to the comparable specifications for the Alpha T point except that the S21 magnitude of the compliance interconnect for the Gamma T load has lower loss. The difference between the S21 for Alpha T to Alpha R and the S21 for the Gamma T to Alpha R is a constant number of dB added to the Alpha T to Alpha R S21 at all frequencies as shown in Figure A.3. This constant number is what ever loss is expected between Alpha T and Gamma T at the fundamental frequency.

Copyright International Organization for Standardization
Provided by IHS under license with ISO
No reproduction or networking permitted without license from IHS
Not for Resale

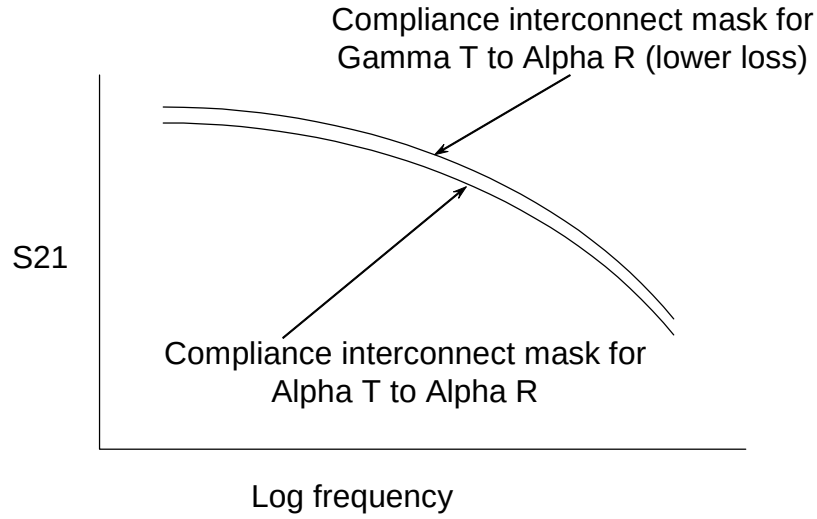

Figure H.3 - Compliance interconnect mask to accommodate the Alpha T to Gamma T loss

In the case of the 4-lane electrical specifications in FC-PI-2 (3,187 5 GBd per lane, 1200-DF-EL-S) [10] the loss between Alpha T and Gamma T is approximately 1,5 dB including reflections from the connector. A loss of 0,5 dB for the PCB trace and 1,0 dB for the connector reflections comprises the 1,5 dB needed for the modified compliance interconnect. The compliance interconnect is assumed either to be mathematical without connectors or to have lossless connectors on the far end (as in the Alpha to Alpha assumptions used for XAUI).

The signal at the Gamma T point shall be able to produce a signal at other the end of a compliance interconnect that has 1,5 dB less loss than the compliance interconnect used for the transmitter signal at Alpha T.

On the receive end the signal at the Gamma R point is larger than the signal at the Alpha R point to accommodate the loss in the PCB trace as shown in Figure A.4. The design required for getting the signal through the Gamma R connector imposes less loss in the bulk cable (that means slightly less length in the cable all else being equal). The signal requirements at Gamma R are derived from the signal requirements at Alpha R. A slightly higher eye opening (both ampitude and jitter) are required for the Gamma R signal. Since only 0,5 dB needs to be accommodated this is a few percent more vertical eye epening at Gamma R than at Alpha R.

--`,,```,,,,````-`-`,,`,,`,`,,`---
Copyright International Organization for Standardization
Provided by IHS under license with ISO
No reproduction or networking permitted without license from IHS
Not for Resale

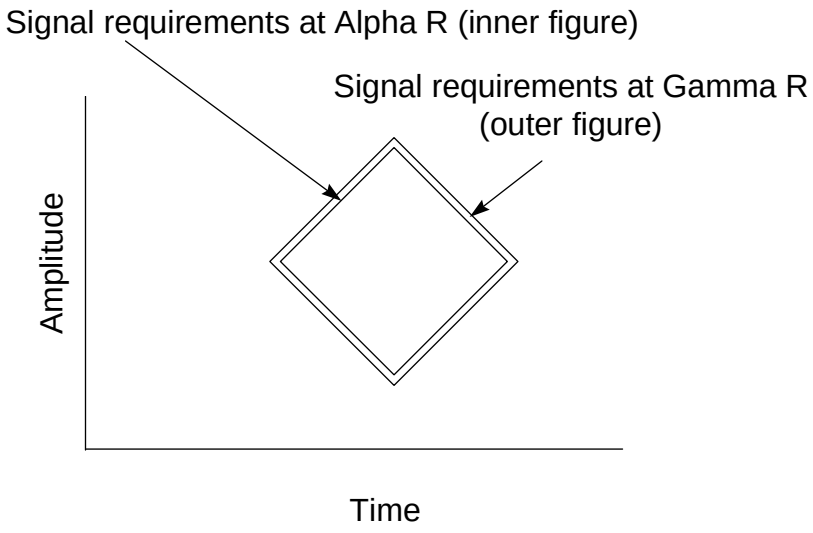

Figure H.4 - Adjusting the Alpha R mask to accommodate the Gamma R to Alpha R loss

Note that this methodology assumes that the PCB losses, connector losses are a small fraction of the total loss. (The non-ideal termination losses should already been accounted for in the Alpha R specifications since the termination is assumed to be in the chip.) That assumption allows tweaking the Alpha specifications to produce the Gamma specifications.

Copyright International Organization for Standardization
Provided by IHS under license with ISO
No reproduction or networking permitted without license from IHS
Not for Resale

Bibliography

[9] ANSI X3.297-1997 - Fibre Channel Physical and Signalling Protocol - 2 (FC-PH-2)

[10] INCITS T11 1506-D, Fibre Channel Physical Interfaces - 2 (FC-PI-2); under consideration as ISO/IEC 14165-142

[11] ANSI X3.303-1997 - Fibre Channel Physical and Signalling Protocol - 3 (FC-PH-3); under consideration as ISO/IEC 14165-113

[12] INCITS T11 1625-D, Fibre Channel Physical Interfaces - 3 (FC-PI-3); under consideration as ISO/IEC 14165-143

[13] INCITS T11 1647-D, Fibre Channel Physical Interfaces - 4 (FC-PI-4); under consideration as ISO/IEC 14165-144
FC-PH, FC-PH-1, FC-PH-2 and FC-PH- 4 listed above are collectively referred to as FC-PH-n

[14] ANSI X3.TR-18:1997 - 10-bit Interface Technical Report (10-bit Interface TR)

[15] INCITS TR-25-1999 01-Sept-1999, Methodologies for Jitter Specification (MJS)

[16] ISO/IEC 8802-3 Information technology -- Telecommunications and information exchange between systems -- Local and metropolitan area networks -- Specific requirements -- Part 3: Carrier sense multiple access with collision detection (CSMA/CD) access method and physical layer specifications [IEEE 802.3z, Media Access Control Parameters, Physical Layer, Repeater and Management Parameters for 1000 Megabit per Second Operation, May 06, 1998 (Gigabit Ethernet)]

[17] IEEE Std 1057-1994 “IEEE Standard for Digitizing Waveform Recorders”

[18] IEEE Std. 181, 1977 Transitions, Pulses, and Related Waveforms

[19] IEEE Std. 194, 1977 Pulse Terms and Definitions

[20] IEEE Std 610.7-1995

[21] Gigabit Ethernet Networking - MacMillan Technical Publication, ISBN 1-7870-062-0 Chapter 9, the gigabit ethernet optical link model

[22] Cunninghan and Lane, Gigabit Ethernet Networking, MacMillan (ISBN 1578700620)

[23] SFF-8410 - Testing and performance requirements for high speed serial and parallel - serial electrical links

[24] SFF-8415 - HPEI (High Performance Electrical Interconnect) Measurement Methodology and Signal Integrity Requirements (under development)

[25] SFF-8412 - High speed serial testing and performance requirements for passive duplex optical connections

[26] Bockelman and Eisenstadt, *IEEE transactions on microwave theory and techniques*, V 43, No 7, p 1530 (1995)

[27] Jacques Rutman et al, “Characterization of Frequency Stability in Precision Frequency Sources”, Proceedings of the IEEE, vol 79, number 6, pages 952-960, June 1991.

[28] Donald B. Percival, “Characterization of Frequency Stability: Frequency-Domain Estimation of Stability Measures”, P. IEEE, vol 79, number 6, pages 961-972, June 1991.

[29] David W. Allan et al, “Statistics of Time and Frequency Data Analysis”, Chapter 8 of “Time and Frequency: Theory and Fundamentals”, NBS Monograph 140, May 1974.

[30] PCI Sig, “PCI Express Base Specification” Rev 1.0, 2002 found at: http://www.pcisig.com/specifications/pciexpress/

[31] Serial ATA working group, “Serial ATA: High Speed Serialized AT Attachment” Rev 1.0 2001 found at: http://www.serialata.org/collateral/index.shtml.

--`,,```,,,,````-`-`,,`,,`,`,,`---

Copyright International Organization for Standardization
Provided by IHS under license with ISO
No reproduction or networking permitted without license from IHS Not for Resale

[32] M. Li, J. Wilstrup, R. Jessen, D. Petrich, “A New Method for Jitter Decomposition Through Its Distribution Tail Fitting”, ITC Proceeding, 1999.

[33] M. Li, J. Wilstrup, R. Jessen, D. Petrich, “Method and Apparatus for Analyzing Measurement”, US Patent No: US 6 298 315 B1, 2001.

[34] J. Patrin, M. Li, “Comparison and Correlation of Signal Integrity Measurement Techniques”, DesignCon 2002, 2002.

[35] Link model for 10 GBE found at: http://www.ieee802.org/3/ae/public/adhoc/serial_pmd/documents/10GEPBud3_1_16a.xls

[36] Link model for 1 GFC found at www.T11.org - document 98-271v0

[37] Dennis Kucera and Paul Meyers, “Automated extraction of pulse-parametrics from multi-valued functions”; US Patent 5,343,405, Tektronix, Inc. Aug. 30, 1994.

[38] GR-253 - Issue 2 December 1995 - SONET

[39] Transmission Line Transformers”, second edition, Jerry Sevick, American Radio Relay League, 1990.

[40] Twisted Magnet Wire Transmission Line” Peter Lefferson, IEEE Trans on Parts, Hybrids, and Packaging, Vol. PHP-7, No. 7, pp 148-154, December 1971.

[41] D. H. Wolaver, Phase-Locked Loop Circuit Design, Englewood Cliffs, NJ: Prentice Hall, 1991.

[42] Tektronix, Sampling oscilloscope techniques, Technique primer 47W-7209 found at: http://www.tek.com/Measurement/cgi-bin/framed.pl?Document=/Measurement/App_Notes/sampling_primer/sampling2.html&FrameSet=oscilloscopes.

Copyright International Organization for Standardization
Provided by IHS under license with ISO
No reproduction or networking permitted without license from IHS Not for Resale

Copyright International Organization for Standardization
Provided by IHS under license with ISO
No reproduction or networking permitted without license from IHS
Not for Resale

INTERNATIONAL
ELECTROTECHNICAL
COMMISSION

3, rue de Varembé
P.O. Box 131
CH-1211 Geneva 20
Switzerland

Tel: + 41 22 919 02 11
Fax: + 41 22 919 03 00
info@iec.ch
www.iec.ch

Copyright International Organization for Standardization
Provided by IHS under license with ISO
No reproduction or networking permitted without license from IHS
Not for Resale