TECHNICAL REPORT

ISO/IEC TR 13561

First edition
1994-12-15

Information technology — Guidelines for effective use of optical disk cartridges conforming to ISO/IEC 10090

Technologies de l'information — Lignes directrices pour utilisation efficace de cartouches de disque optique conformes à l'ISO/CEI 10090



Reference number
ISO/IEC TR 13561:1994(E)

Copyright International Organization for Standardization
Provided by IHS under license with ISO
No reproduction or networking permitted without license from IHS

Not for Resale

Contents

		Page
1	Scope	1
2	References	1
3	Abbreviations	1
4	Judgement for each item	1
4.1	Functional Areas	2
4.2	Control Zone information	2
4.3	Number and location of erroneous sector in the DMA	2
4.3.1	Check DMA just after having made a new DMA, in Case A (11)	3
4.3.2	Check DMA before reading/writing the data in user zone just after loading the disk into the drive, in Case B (4 and 17)	3
4.3.3	Check a DMA after updating the SDL, in Case B (10, 14, and 23)	3
4.4	Number of bad sectors in the Rewritable Zone	4
4.5	DDS information	4
5.	The recommendation for the procedure of making a DMA	4
5.1	The contents of each DMA just after the certification	4
5.2	The usage of the old PDL and SDL which are already recorded in the case of re-initialization	4
5.3	Recommendation for the order of erasing/writing a sector in the DMA	5
5.3.1	The order of erasing/writing sectors in the DMA duaring initialization or re-initialization	5
5.3.2	The order of erasing/writing sectors in the DMA when updating the SDL	5

© ISO/IEC 1994
All rights reserved. Unless otherwise specified, no part of this publication may be reproduced or utilized in any form or by any means, electronic or mechanical, including photocopying and microfilm, without permission in writing from the publisher.

ISO/IEC Copyright Office • Case postale 56 • CH-1211 Genève 20 • Switzerland

Printed in Switzerland

Copyright International Organization for Standardization
Provided by IHS under license with ISO
No reproduction or networking permitted without license from IHS
Not for Resale

6.	Recommendation for sector replacement	6
6.1	Handling when the number of bad sectors exceeds the number of replacement sectors in a group during certification	6
6.2	Handling when the number of bad sectors exceeds the number of replacement sectors in a Group, during write mode	6
6.3	Order for the usage of the spare area	6
6.4	The number of replacement chaining	6
6.5	Sector replacement in the DMA	6
6.6	Reassign during read mode	6
7.	Write condition at rotational speed other than 30 Hz	7
8.	Recommendation for Partially Embossed disks	7

--`,,```,,,,````-`-`,,`,,`,`,,`---

Copyright International Organization for Standardization
Provided by IHS under license with ISO
No reproduction or networking permitted without license from IHS Not for Resale

Foreword

ISO (the International Organization for Standardization) and IEC (the International Electrotechnical Commission) form the specialized system for worldwide standardization. National bodies that are members of ISO or IEC participate in the development of International Standards through technical committees established by the respective organization to deal with particular fields of technical activity. ISO and IEC technical committees collaborate in fields of mutual interest. Other international organizations, governmental and non-governmental, in liaison with ISO and IEC, also take part in the work.

In the field of information technology, ISO and IEC have established a joint technical committee, ISO/IEC JTC 1.

The main task of technical committees is to prepare International Standard, but in exceptional circumstances a technical committee may propose the publication of a Technical Report of one of the following types:

— type 1, when the required support cannot be obtained for the publication of an International Standard, despite repeated efforts;

— type 2, when the subject is still under technical development or where for any other reason there is the future but not immediate possibility of an agreement on an International Standard;

— type 3, when a technical committee has collected data of a different kind from that which is normally published as an International Standard ("state of the art", for example)

Technical Reports of type 1 and 2 are subject to review within three years of publication, to decide whether they can be transformed into International Standards. Technical Reports of type 3 do not necessarily have to be reviewed until the data they provide are considered to be no longer valid or useful.

ISO/IEC TR 13561, which is a Technical Report of type 3, was prepared by Joint Technical Committee ISO/IEC JTC 1, *Information technology*, Subcommittee SC 23, *Optical disk cartridges for information interchange*.

Copyright International Organization for Standardization
Provided by IHS under license with ISO
No reproduction or networking permitted without license from IHS Not for Resale

Introduction

This Technical Report covers several topics to prevent that different makers of drives A and B do not make a different judgement (Good (GO) or Not Good (NG)) on the same disk due to control scenario differences between drives A and B.
For example, in the case that a disk has some erroneous sector in the DMA, drive A may judge the disk as NG and drive B may accept this disk; this might confuse the users and this situation should be avoided from the usability point of view.
This Technical Report has been prepared by expert members of companies and organizations experienced in ODC manufacturing, research and distribution. This Technical Report is intended to aid the user in meeting the requirements of ISO/IEC 10090. The text of this Technical Report is to be construed as a guideline to a successful implementation of ISO/IEC 10090.

Copyright International Organization for Standardization
Provided by IHS under license with ISO
No reproduction or networking permitted without license from IHS Not for Resale

Information technology — Guidelines for effective use of optical disk cartridges conforming to ISO/IEC 10090

1 Scope

This Technical Report provides guidelines for the control scenario including formatting, defect management, the usage of Control Zone Data, etc. of drives which claim conformance to ISO/IEC 10090, in order to achieve better usability of the 90mm optical disk cartridges conforming to ISO/IEC 10090.

2 References

ISO/IEC 10090 : 1992, *Information technology - 90mm optical disk cartridges, rewritable and read only, for data interchange*

3 Abbreviations

DDS Disk Definition Sector
DMA Defect Management Area
GO Good
LBA Logical Block Address
NG Not Good
PBA Physical Block Address
PDL Primary Defect List
SDL Secondary Defect List

4 Judgement for each item

The method and threshold for judgement whether a disk is GO or NG are described in this clause.
The items referring to the judgement of GO or NG of a disk are given in

(1) Functional Areas (see 4.1)
(2) Control zone informations (see 4.2)
(3) Number and alignment of erroneous sectors in DMA (see 4.3)
(4) Number of bad sectors in Rewritable zone (see 4.4)
(5) DDS information (see 4.5)
(6) Others (not described in this Technical Report).

Copyright International Organization for Standardization
Provided by IHS under license with ISO
No reproduction or networking permitted without license from IHS Not for Resale

Abovementioned objects (1) - (5) are divided into the cases A and B as follows to make the judgement of GO or NG (see figure1 and figure2):

Case A : Drives initialize or re-initialize the disk ("initialize" means that drive makes new DMAs)

Case B : Drives read/write the disk which is already recorded (including updating SDL)

The threshold for judgement whether a disk is GO or NG may be different depending on Case A or Case B. And the judgement may depend on the differences in the commands of host computers. The judgement whether a disk is GO or NG is described in the following clauses, item by item. The actions requested by the host computer when the error or NG occurs are shown in table 1.

4.1 Functional Areas

Functional Areas are on side A (see ISO/IEC 10090 : 9.3.6).
FA1 is open, FA2 is closed, which means the writing is inhibited.

The following situations occur:

1. Case A
   The drive should not certify the disk but return an appropriate error message.

2. Case B
   a. The drive writes data in the Test Zone (see ISO/IEC 10090 : 17.2.3)
   b. The drive reassigns sectors when the drive encounters difficulties in reading sector data. In this case the drive updates the SDL.

4.2 Control Zone information

(1) There are many kinds of information in the Control Zone (see annex F in ISO/IEC 10090). The two different types of information are : 1. mandatory 2. not mandatory. The disks conforming to ISO/IEC 10090 shall have the mandatory information in the Control Zone. But, the drive does not need to use the information in the Control Zone.

(2) This Technical Report recommends that the drive at least should check Byte 7 in the Control Zone.

(3) Using the information of the unspecified bytes (for example, Bytes 14 to 17 or Bytes 480 to 511) to justify rejection of the disk is not allowed in ISO/IEC 10090. But another method can be used. For example, the drive can derive the write power from the disk vendor name in the unspecified bytes in the case that the disk vendor name is recorded in those bytes.

4.3 Number and location of erroneous sectors in the DMA

The judgement whether a disk is GO or NG by the number and location of erroneous sectors in the DMA is made as follows :
The drive checks the number and location of erroneous sectors in the DMA as follows :
(1) Check DMA just after having made a new DMA, in Case A (see 4.3.1)

(2) Check DMA before reading/writing the data in user zone just after loading the disk into the drive, in Case B (see 4.3.2)

(3) Check DMA after updating the SDL, in Case B (see 4.3.3)

Copyright International Organization for Standardization
Provided by IHS under license with ISO
No reproduction or networking permitted without license from IHS Not for Resale

The criteria of disk acceptance for each situation are shown in figure 5.

A sector is considered as erroneous in the following three cases :
(This is different from the definition of bad sector in the user zone which should be replaced (see the Guideline in annex G in ISO/IEC 10090)).

(a) The data in the Data field cannot be corrected by own ECC.
(b) The Address can not be read.
(c) The contents are different from those allowed by ISO/IEC 10090.

4.3.1 Check DMA just after having made a new DMA, in Case A (11)

The drive checks whether the DMA meets the criteria in 5.3.2(The most stringent criterion is that all DMAs have no erroneous sectors). If the data of DDS, PDL, and SDL match the DMA information in the drive memory, the DMA is good. If not, the DMA is NG.
Additionally, other sectors than those for DDS,PDL, and SDL up to the 19th sector in each DMA (which may be used as SDL in future) may contain recorded (FF) data and may be checked. The maximum number of sectors actually used in a DMA is 19 : one DDS sector, one PDL sector and 17 SDL sectors.
The reason why this Technical Report recommends that the criteria for an NG DMA are not fixed is that the more stringent criteria easily could cause rejection during certification and rarely during the media life time. The criteria depend on each drive maker's concept of when the drive should report errors to the user, for example, during certification or during usage.

4.3.2 Check DMA before reading/writing the data in user zone just after loading the disk into the drive, in Case B (4 and 17)

Figure 3 shows how the DMA is checked. This Technical Report does not require drives to follow this flow, because this flow is just an example to explain DMA checking. This Technical Report recommends that each drive maker should design his drive so that the drive can get the same judgement as obtained by following the flow in figure 3.

The flow in figure 3 is :
(1) In the case that the DDS is an erroneous sector, the drive should not use the DMA following this DDS.
(2) The drive should use the first PDL which is followed by a good DDS by reading DMA1,2,3 and 4 sequentially.
(3) In the case that the lengths of the lists of SDLs (Byte 4,5) are different in each DMA, the drive should use the SDL which has the longest list of bad sectors.
(4) This Technical Report does not recommend how to handle if the contents of SDLs are different even though the lengths of lists of bad sectors are the same, because this case is very rare.
(5) The drive should make the complete SDL list by putting good sectors together from the SDLs which has the longest list of bad sectors.

Two examples for the procedure of figure 3 are shown in figure 6 and figure 7.

The flow in figure 3 shows the criteria of selecting a good DMA in the case that the drive intends to read data only in the user zone after this DMA checking. In the case that the drive updates an SDL or writes data in the user zone and updates the SDL after the DMA checking, the drive can use more stringent criteria than those of figure 3. The reason why this Technical Report recommends that the criteria for an NG DMA are not fixed is the same as given in 5.3.1.

Copyright International Organization for Standardization
Provided by IHS under license with ISO
No reproduction or networking permitted without license from IHS
Not for Resale

4.3.3 Check a DMA after updating the SDL, in Case B (10, 14, and 23)

In this case, the drive should check whether there is one or more DMA which has no erroneous sector. If there is no such DMA, the disk is NG. Additionally, other sectors than those for DDS,PDL, and SDL up to the 19th sector in each DMA may be checked. The drive can use the same criteria as the abovementioned criteria in the case that the drive updates the SDL using a new sector and this new sector is an erroneous sector.

4.4 Number of bad sectors in the Rewritable Zone

The guidelines for bad sectors are given in annex G of ISO/IEC 10090.

(1) In the case that the number of bad sectors which is found by the certification process is more than the number of the spare sectors in Case A, the drive shall judge the disk as NG (9).

(2) In the case that the total number of bad sectors is more than the number of the spare sectors during the sector replacement or reassignment in Case B, the drive shall judge the disk as NG (8, 11, and 21).

(3) This Technical Report recommends drive users to allocate 1024 spare sectors, because the number of defective sectors could increase to 1024 by several reasons even if the initial number of defective sectors is very low. To allocate 1024 spare sectors, this Technical Report recommends that the number of spare sectors should be 1024 by default. And, if the drive permits a user to allocate less than 1024 spare sectors, the drive should make the user aware of the risk that the number of spare sectors can become exhausted which causes an error even if the disk conforms to ISO/IEC 10090.

4.5 DDS information

The drive should return a host computer error message if the identifier of a DDS is not (0A0A) (Case A : 6, Case B : 5 and 18).

5 The recommendation for the procedure of making a DMA

5.1 The contents of each DMA just after the certification

The contents of each DMA just after the certification consist of :

(1) In the case that there are some bad sectors detected by the certification

- PDL sectors which have the header (Bytes 0 to 3) and the information of the bad sectors.
- One SDL sector which has the header (Bytes 0 to 15) and no information of the bad sectors (Bytes 16 to 512 = (FF))
(But, in the special case that the number of bad sectors in a Group is higher than the number of spare sectors in a Group, the number of bad sectors in excess of the number of the Spare sectors in a Group shall be recorded in the SDL (see 19.2.1 in ISO/IEC 10090)
- Other sectors than those for DDS,PDL, and SDL up to the 19th sector in each DMA which may contain recorded (FF) data.

(2) In the case that there is no bad sector detected by certification

- One PDL sector which has the header (Bytes 0 to 3) and no information of the bad sectors (Bytes 4 to 512 are (FF))
- One SDL sector which has the header (Bytes 0 to 15) and no information of the bad sectors (Bytes 16 to 512 are (FF))
- Other sectors than those for DDS,PDL, and SDL up to the 19th sector in each DMA which may contain recorded (FF) data.

Copyright International Organization for Standardization
Provided by IHS under license with ISO
No reproduction or networking permitted without license from IHS Not for Resale

5.2 The usage of the old PDL and SDL which are already recorded in the case of re-initialization.

The drive can use the lists of bad sectors in the old PDL and SDL which are already recorded in the case of re-initialization. Some examples for re-initialization are :

(1) The drive does not use the old PDL and SDL which are already recorded.
1) The drive certifies in the same way as during the first initialization.
2) The drive does not certify but changes the length of the list of bad sectors in the PDL and the SDL to zero.

(2) The drive uses the old PDL and SDL which are already recorded. In this case, the drive does not certify . The drive makes a new PDL and SDL e.g. using the information of the bad sectors in the old PDL and SDL as follows :
1) The drive records the information of the bad sectors, if spare sectors in the Group are exhausted, in a new Group in a new SDL, and records the information of other bad sector in a new PDL.
2) The drive deletes the information of the bad sectors, if spare sectors in the Group are exhausted, and records the information of other bad sector in a new PDL.
3) The drive deletes the information in the old SDL, and does the same as in 1) and 2) using the information in the old PDL.

Additionally, the disk conforming to ISO/IEC 10090 does not have the P-list which is specified in SCSI-2, because the P-list on a Fixed Disk shall not be changed but the list in the PDL in ISO/IEC 10090 can be changed. In the SCSI-2 standard, the P-list is determined by the media manufacturer before shipping and shall never be changed.

5.3 Recommendation for the order of erasing/ writing a sector in the DMA

5.3.1 The order of erasing/ writing sectors in the DMA during initialization or re-initialization

The drive should write new DMAs after erasing all four DMAs (including DDS, PDL, SDL). By this procedure, it is possible to avoid that the contents of each DDS and PDL are not identical, even if, for example, power failure occurs during DMA updating. The drive should be designed so that the contents of DDS and SDL should not be changed except by initialization or re-initialization. (The drive can erase the DDS or the PDL temporarily in some cases, for example, when updating the SDL.)

5.3.2 The order of erasing/writing sectors in the DMA when updating the SDL

The drive should be designed so that the contents of DDS and PDL should not be changed during updating of the SDL. Updating of the SDL without erasing DDS and PDL may be done, however this is not recommended.
This Technical Report does not recommend which of four DMAs should be erased/written because the drive cannot always fix the order of erasing/writing DMAs. This order depends on the drive design concept.

Example for order of erasing/writing DMAs during updating of the SDL (see figure 8) :

If there is only one good DMA in which all sectors are good before updating the SDL, the drive does not update this good DMA, and the drive updates the other DMAs. If all DMAs which are updated have erroneous sectors, the drive returns the write error code to the computer without updating the good DMA. By this procedure, the drive can save the data in the old DMA. In this procedure, it is impossible to generally determine the order of the

Copyright International Organization for Standardization
Provided by IHS under license with ISO
No reproduction or networking permitted without license from IHS Not for Resale

erasing/writing of the DMAs on updating the SDL list, because it depends on the location of the good DMA which cannot be determined either.
Additionally, if the drive uses this procedure, the drive should use the three bad DMAs to make the longest SDL the correct SDL. (see.5.3.2) in one of the following ways :

(1) Erase the first SDL sector which has the SDL identifier
(2) Erase all SDL sectors
(3) Reset the SDL contents to the old one

6 Recommendation for sector replacement

6.1 Handling when the number of bad sectors exceeds the number of replacement sectors in a group during certification

(1) or (2) is recommended :

(1) The number of bad sectors in excess of the number of replacement sectors in a group shall be entered in a SDL, not in a PDL as specified in ISO/IEC 10090.

(2) The number of bad sectors in excess of the number of replacement sectors in a group shall be deleted without being entered in the SDL. The result is that there are SDLs which have a SDL header (Bytes 0 to 15) but have no information on bad sectors (Bytes 16 to 512 = (FF)).

In case (1), the drive uses the replacement sectors of another Group ; this other Group is determined after slipping by PDL of all Groups ; the top sector is used first. This Technical Report does not recommend which Group should be used.
And, as shown in 5.4, in the case that the number of bad sectors is larger than the number of the spare sectors , the drive should judge this disk as NG.

6.2 Handling when the number of bad sectors exceeds the number of replacement sectors in a Group, during write mode

The drive uses the replacement sectors in other Groups. This Technical Report does not recommend which groups replacement sector should be used.

6.3 Order for the usage of the spare area

This Technical Report recommends that drive uses the replacement sectors from the top, just beyond the data sectors, including slipped sectors, in the spare area defined in 19.2.1 of ISO/IEC 10090. In the case that there are some unused replacement sectors between the used sectors in the replacement area, the following is recommended :
(This case can not occur when using from the top sector first.)
(1) The drive tries to use the unused sectors as the replacement sectors.
(2) The drive judges the unused sectors as bad sectors without trying to use them.

In case (2), overflow may occur even though the number of bad sectors is smaller than the number of total spare sectors. But this Technical Report recommends both procedure (1) and (2), because such a situation hardly occurs.

6.4 The number of replacement chaining

It is specified that in the case that the replacement sectors are bad sectors, the replacement sectors themselves should be replaced and all these sectors are entered in the SDL (see.19.6 in ISO/IEC 10090). This operation is called "chaining".
In the read mode, the drive should handle chaining of up to 1024 bad replacement sectors.

Copyright International Organization for Standardization
Provided by IHS under license with ISO
No reproduction or networking permitted without license from IHS Not for Resale

In the case that chaining occurs continuously, the drive can return an error code to the host computer even though there are some replacement sectors left. A bad condition of the drive can cause such continuous chaining and the drive can save media from exhaustion of spare sectors due to a drive error.

6.5 Sector replacement in the DMA

The drive should not replace any sectors in the DMA.

6.6 Reassign during read mode

In Case B the drive can reassigns. sectors when the drive encounters some difficulties in reading block data. In this case, the drive can update the SDL as well.

7 Write condition at rotational speed other than 30 Hz

In the case that there is no information on the erasing/writing condition for the preferred rotational speed in the Control zone, the drive shall try to write the data with the quality of signal required by ISO/IEC 10090. This Technical Report does not recommend a specific method. For example, the drive can determine the appropriate write power by measuring the amplitude of 3T or Byte error rate in the Test zone by changing the write power.

8 Recommendation for Partially Embossed disks

Example of how to record Bytes 400 to 428 in the Control zone and how to obtain the Logical Block Address (LBA) of the Embossed zone in the case of Partially Embossed are given in this clause.
These examples are for a type of formatting where the continuation of the LBA lies between the Rewritable zone and the Embossed zone. In other types of formatting, the continuation of the LBA may not be necessary.

(1) Disk
On the Partially Embossed disk, this Technical Report recommends that Bytes 400 to 428 in the Control zone are recorded as follows :
400 to 403 ; (FF)
404 to 411 ; Grouping and Replacement sector information in the Rewritable zone are the same as in DDS Bytes 4 to 11.
411 to 420 ; Grouping and Parity sector information in the Embossed zone are the same as in DDS Bytes 11 to 20.
421 to 428 ; (FF)

(2) Initialization by disk manufacturer or by user drive

The disks are initialized so that DDS Bytes 4 to 20 are the same as Control Bytes 404 to 420.

By procedures (1) and (2), the drive can obtain information about the LBA in the Embossed zone. LBA of the first sector in the Embossed zone is equal to the total number of LBAs in the Rewritable area. LBA in the Embossed zone can be determined, because the total number of LBAs in the Rewritable zone is determined by Control zone Bytes 404 to 411.
Additionally, if a user wants to use a Partially Embossed disk as a Fully Rewritable disk by using only the Rewritable area, it is not necessary to determine the total number of LBAs in the Rewritable zone. In this case, the user can record values in the DDS different from the values in the Control zone Bytes 404 to 411.

An example for the formatting of a Partially Embossed disk is given below.

Copyright International Organization for Standardization
Provided by IHS under license with ISO
No reproduction or networking permitted without license from IHS Not for Resale

1) Disk

Bytes in the Control zone are :

380 and 381 ; Start track number of Embossed zone = (1F40) i.e. 8000
382 and 383 ; Last track number of Embossed zone = (270B) i.e.9995 (fixed)
400 to 403 ; (FF)
404 to 405 ; Number g1 of R/W Groups = 2
406 to 408 ; Number n1 of R/W Data Sector per Groups = (EA60) i.e. 60000
409 to 411 ; Number m1 of R/W Spare Sector per Group = (200)
412 to 413 ; Number g2 of Embossed Groups = 3
414 to 416 ; Number n2 of Embossed Data Sectors per Group = (3E8)
417 to 419 ; Number m2 of Embossed Parity Sector per Group = (32)
420 ; Number of tracks per Parity Sector = (01)
421 to 428 ; (FF)

2) Initialization by disk manufacturer or by user drive in the case of doing certification

* {Case 1 } : Initialization to use this disk as Partially embossed disk

1. First, the drive receives the information on where the Rewritable area is from the Control zone Bytes 380 and 381, and certifies the data sectors and spare sectors to discover the bad sectors. In this example, there are nine bad sectors ; therefore, one PDL sector is enough to enter all bad sectors.

2. The drive records DDS,PDL, and SDL in four DMAs. Bytes 0 to 28 in the DDS are as follows. Bytes 4 to 20 in the DDS are the same as Bytes 404 to 420 in the Control zone.

The bytes in DDS and their contents are :

0 and 1 ; (0A0A)
2 ; (00)
3 ; (01)
4 and 5 ; (02)
6 to 8 ; (EA60)
9 to 11 ; (200)
12 and 13 ; (3)
14 to 16 ; (3E8)
17 to 19 ; (32)
20 ; (01)
21 to 24 ; Start of PDL = this DDS + 1
25 to 28 ; Start of SDL = this DDS + 2

This results lead to the layout in figure 4.

3. The drive receives the information on the LBA of the first sector in the Embossed zone as follows :
LBA of first sector in the Embossed zone
= Total number of LBAs in the Rewritable zone
= m1 x g1 = 60000 x 2 = 120000
Usually the LBA starts from zero.

4. The drive can get the LBA of Data sectors in the Embossed zone on the way given in 3. For example, the last LBA in the Embossed zone is as follows :
The last LBA in the Embossed zone
= The LBA of the first sector in the Embossed zone + the total number of LBAs in the Embossed zone - 1 = 120000 + (1000 x 3) - 1 = 122999

Copyright International Organization for Standardization
Provided by IHS under license with ISO
No reproduction or networking permitted without license from IHS Not for Resale

5. The drive can act as follows, depending on the kind of host computer.

(1) The following information is to be embossed by the disk manufacturer.
1) A copy of the information such as Boot, Directory, and FAT, etc., that is to be recorded in LBA Nos.(Y to Y + a) in the Rewritable zone (may be the first part), is recorded in actual usage in LBA Nos. (X to X + a) in the Embossed zone.
2) The information of LBA Nos. (X to X + a) and (Y to Y + a) is recorded in the last LBA sector in the Embossed zone.

(2) The drive duplicates the information in the LBA No. (X to X + a) to the LBA No.(Y to Y + a) by the information in the last LBA in the Embossed zone when the drive initializes this disk. So, this disk has the information of Boot, Directory, and FAT,etc.in the Rewritable zone after initialization.

* {Case 2 } : Initialization to use this disk as Fully Rewritable disk

1. First, the drive gets the information on where the Rewritable area is from the Control zone Bytes 380 to 381, and certifies the data sectors and spare sectors to discover the bad sectors. In this example, there are seven bad sectors; therefore, one PDL sector is enough to enter all bad sectors.

2. The drive records DDS,PDL, and SDL in four DMAs.

(1) Bytes 4 to 11 in the DDS which show the information of the grouping of the Rewritable zone may be different from Bytes 404 to 411 in the Control zone. Bytes 4 to 11 in the DDS may be the same as Bytes 404 to 411 in the Control zone, too. The drive should do the grouping which is included in Rewritable zone by getting the information of Bytes 380 to 381 in the Control zone.

(2) Bytes 12 to 19 in DDS are (00), and Byte 20 in DDS is (00) or (01). There is no information of the grouping in the Embossed zone, because the LBA of the Embossed zone is erroneous due to the non determined total number of LBAs in the Rewritable zone due to the setting of Bytes 4 to 11 in DDS as shown under (1). In this case, there is inconsistency between Byte 7 in the Control zone and Bytes 12 to 19 in the DDS. So, the drive may be requested whether it is able to handle this case.

Bytes in DDS and their contents:

```
 0 and  1   ; (OAOA)
 2          ; (00)
 3          ; (01)
 4 and  5   ; (4)
 6  to  8   ; (C350)
 9  to 11   ; (100)
12 and 13   ; (00)
14  to 16   ; (00)
17  to 19   ; (00)
20          ; (00) or (01)
21  to 24   ; Start of PDL = this DDS + 1
25  to 28   ; Start of SDL = this DDS + 2
```


Copyright International Organization for Standardization
Provided by IHS under license with ISO
No reproduction or networking permitted without license from IHS Not for Resale

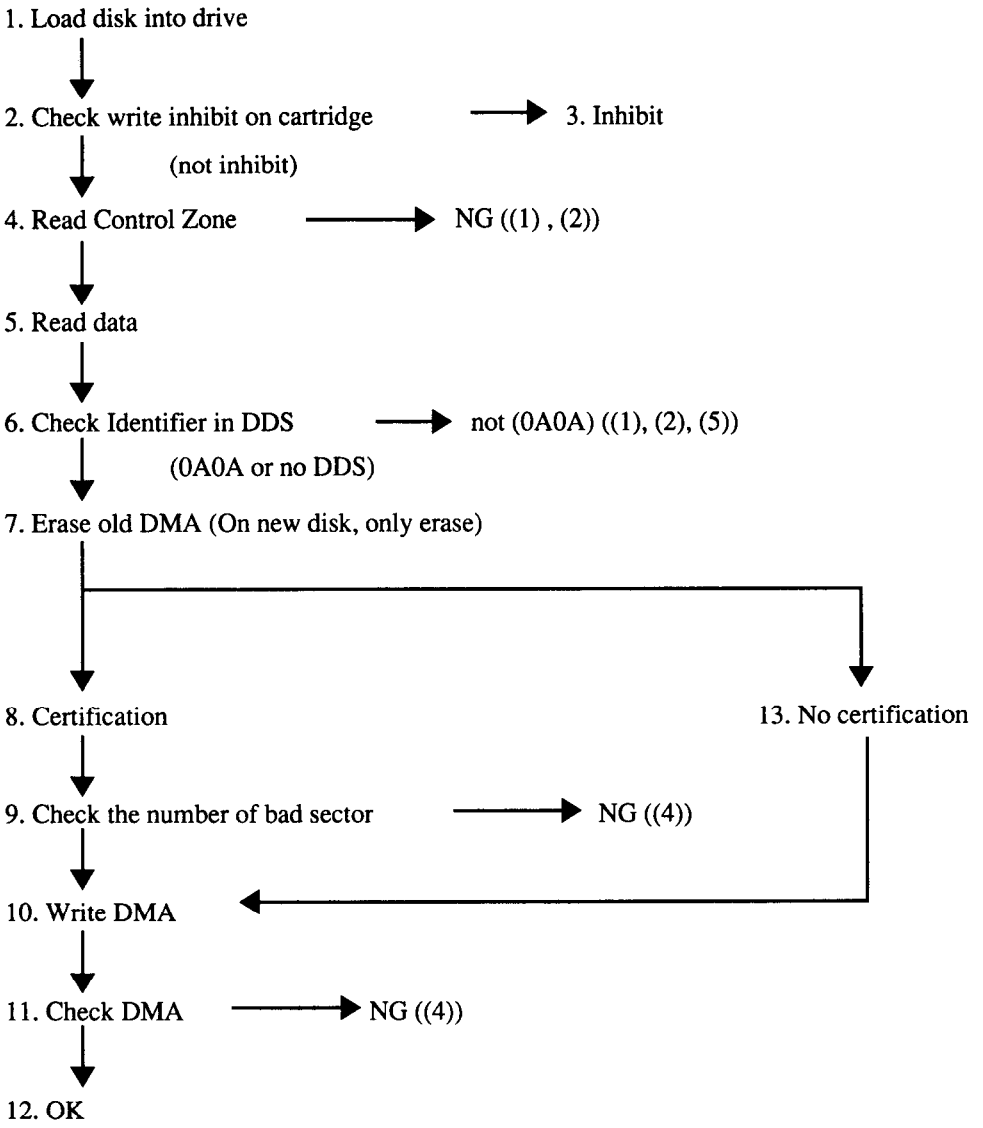

Figure 1 - Case A :Initialization or re-initialization of the disk (including certification)
(Initialization means that the drive makes a new DMA)

Copyright International Organization for Standardization
Provided by IHS under license with ISO
No reproduction or networking permitted without license from IHS
Not for Resale

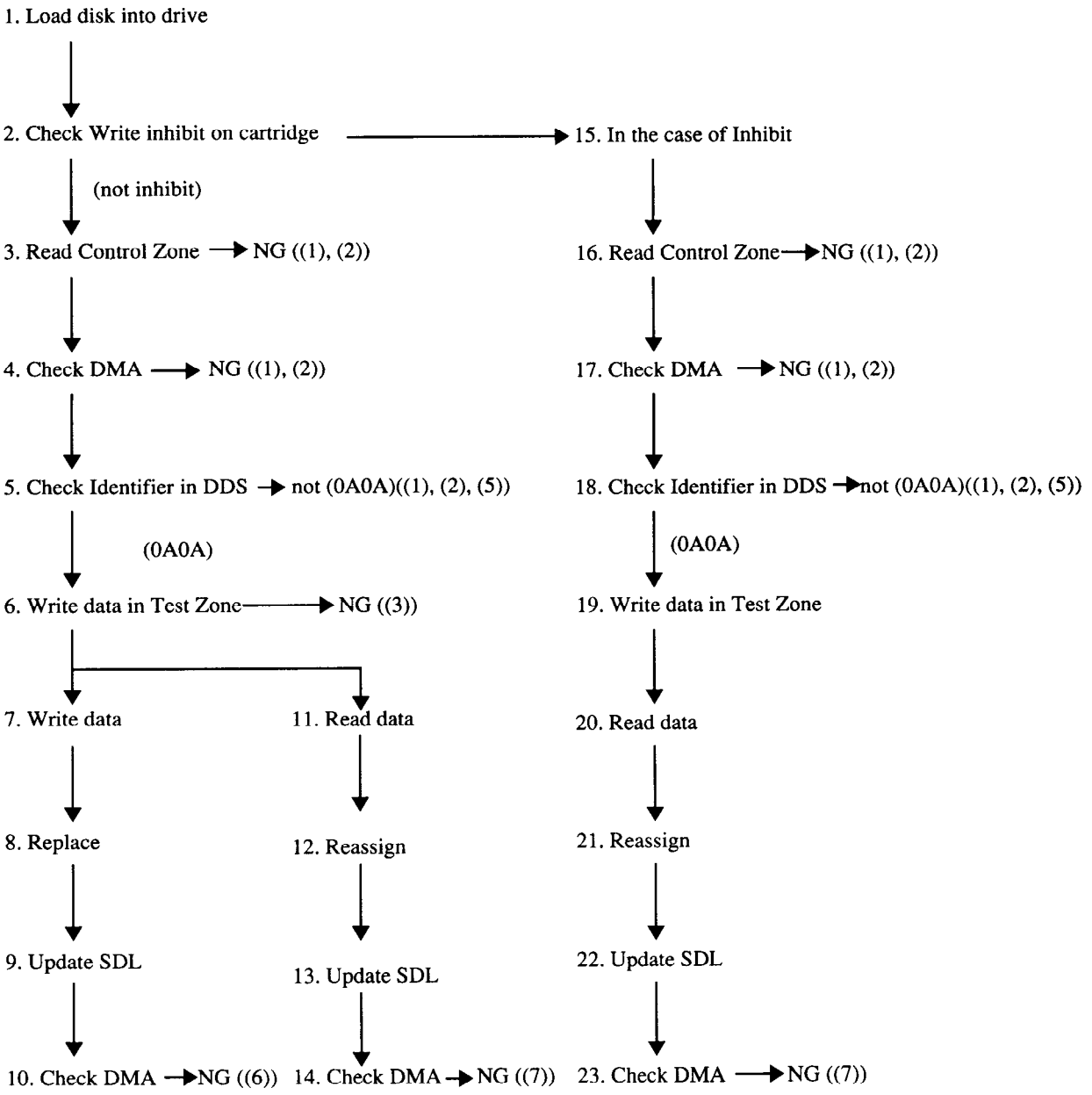

Figure 2 - CASE B : The general read / write the disk which DMA is already recorded (including updating SDL)

Copyright International Organization for Standardization
Provided by IHS under license with ISO
No reproduction or networking permitted without license from IHS
Not for Resale

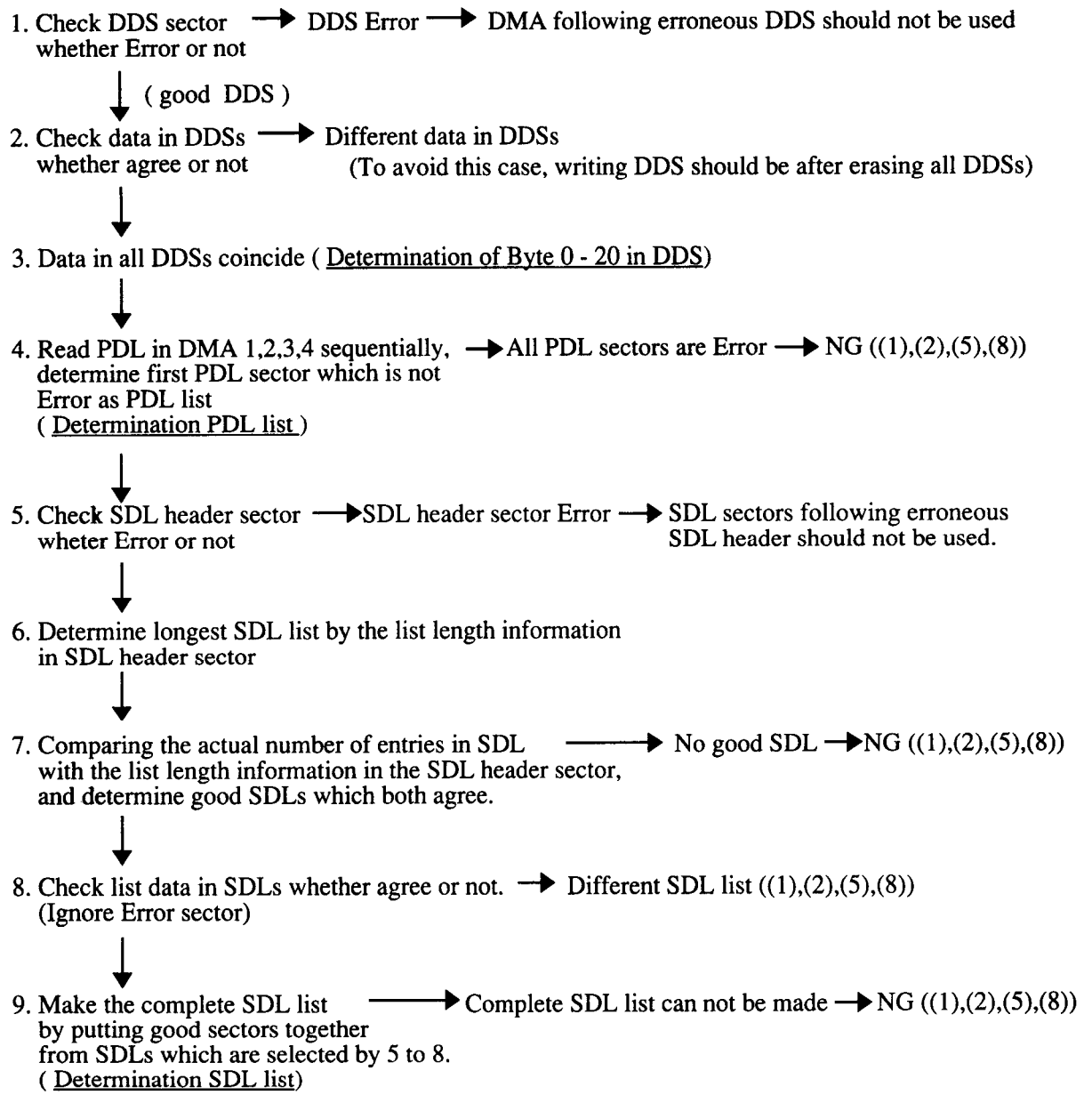

" Error " means that the status of the sector is as follows ;
" Data can not be corrected by ECC " or
" ID address can not be read " or
" Data are different from ISO/IEC 10090 "

" SDL header sector " means " First SDL sector in each DMA "

Figure3 - Procedure of DMA checking for No.4 in case B (see Figure 2)

Copyright International Organization for Standardization
Provided by IHS under license with ISO
No reproduction or networking permitted without license from IHS Not for Resale

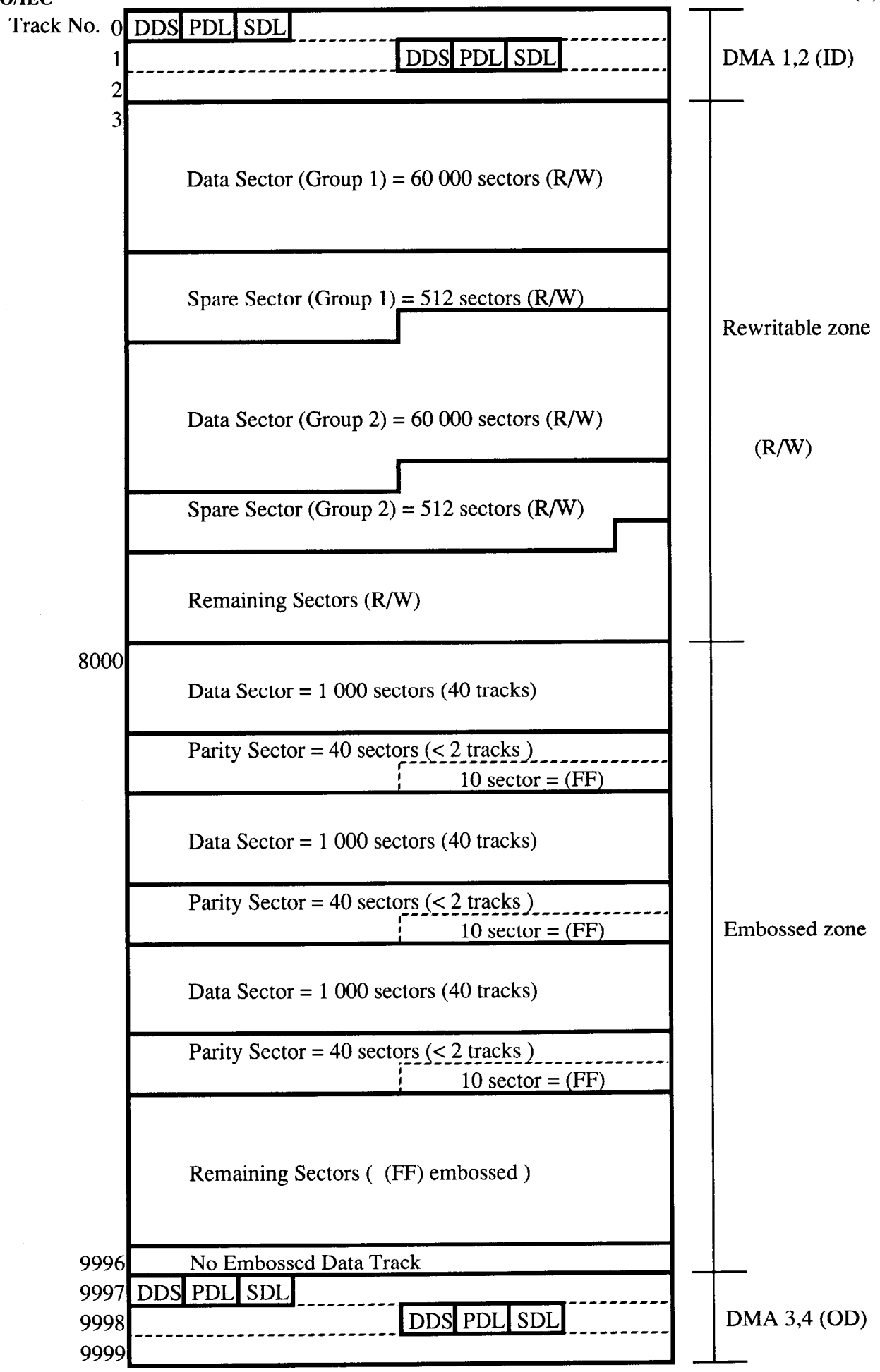

Figure 4 - Disk layout in case 1 (see.8)

Copyright International Organization for Standardization
Provided by IHS under license with ISO
No reproduction or networking permitted without license from IHS
Not for Resale

Table 1 - The request to the host computer when an error or NG occurs in figure1, figure2 or figure3

O ; This mode can be done.
X ; This mode should not be done.

No.	eject disk	user data		re-initialize	replacement	Contents of warning, etc.
		read	write			
(1)	eject	X	X	X	X	
(2)	not eject	X	X	X	X	
(3)	not eject	O	X	X	X	
(4)	not eject	X	X	O	X	
(5)	not eject	X	X	O	X	Confirm to user
(6)	not eject	O	O	O	O	Warn " DMA updating can not be done " just after reading.
(7)	not eject	O	O	O	O	Warn " DMA updating can not be done " during or just after reading.
(8)	not eject	O	X	O	X	Warn " DMA is not good "

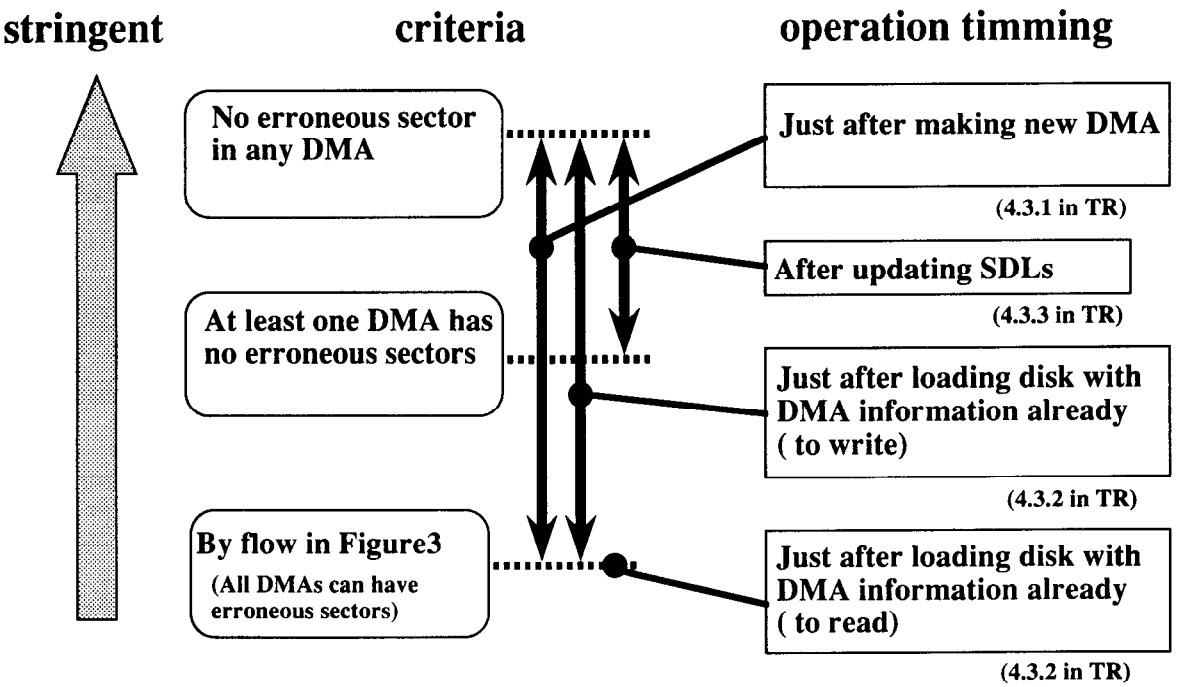

Figure 5 - The criteria of disk acceptance
(judgement for DMA)

Copyright International Organization for Standardization
Provided by IHS under license with ISO
No reproduction or networking permitted without license from IHS
Not for Resale

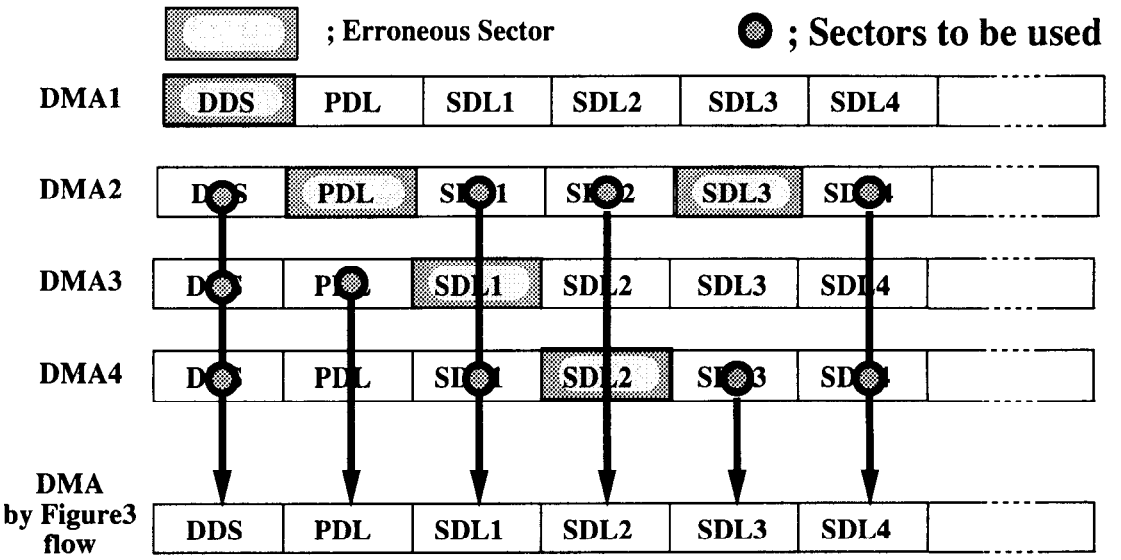

Figure 6 - Example 1 : How to get DMA information by flow in Figure 3
(In this case, DMA information can be obtained)

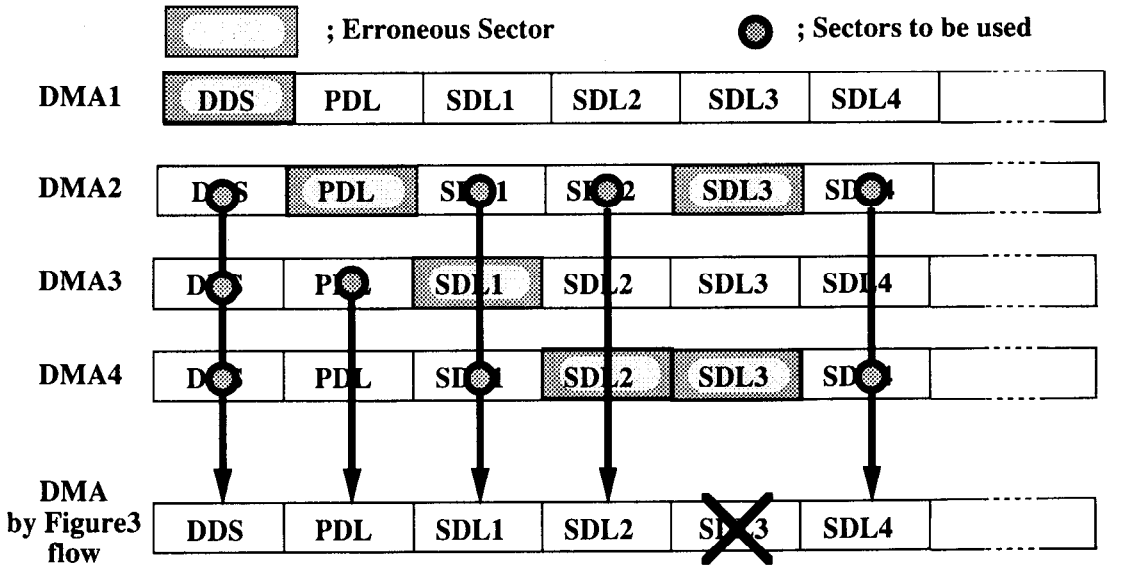

Figure 7 - Example 2 : How to get DMA information by flow in Figure 3
(In this case, DMA information cannot be obtained)

Copyright International Organization for Standardization
Provided by IHS under license with ISO
No reproduction or networking permitted without license from IHS
Not for Resale

© ISO/IEC

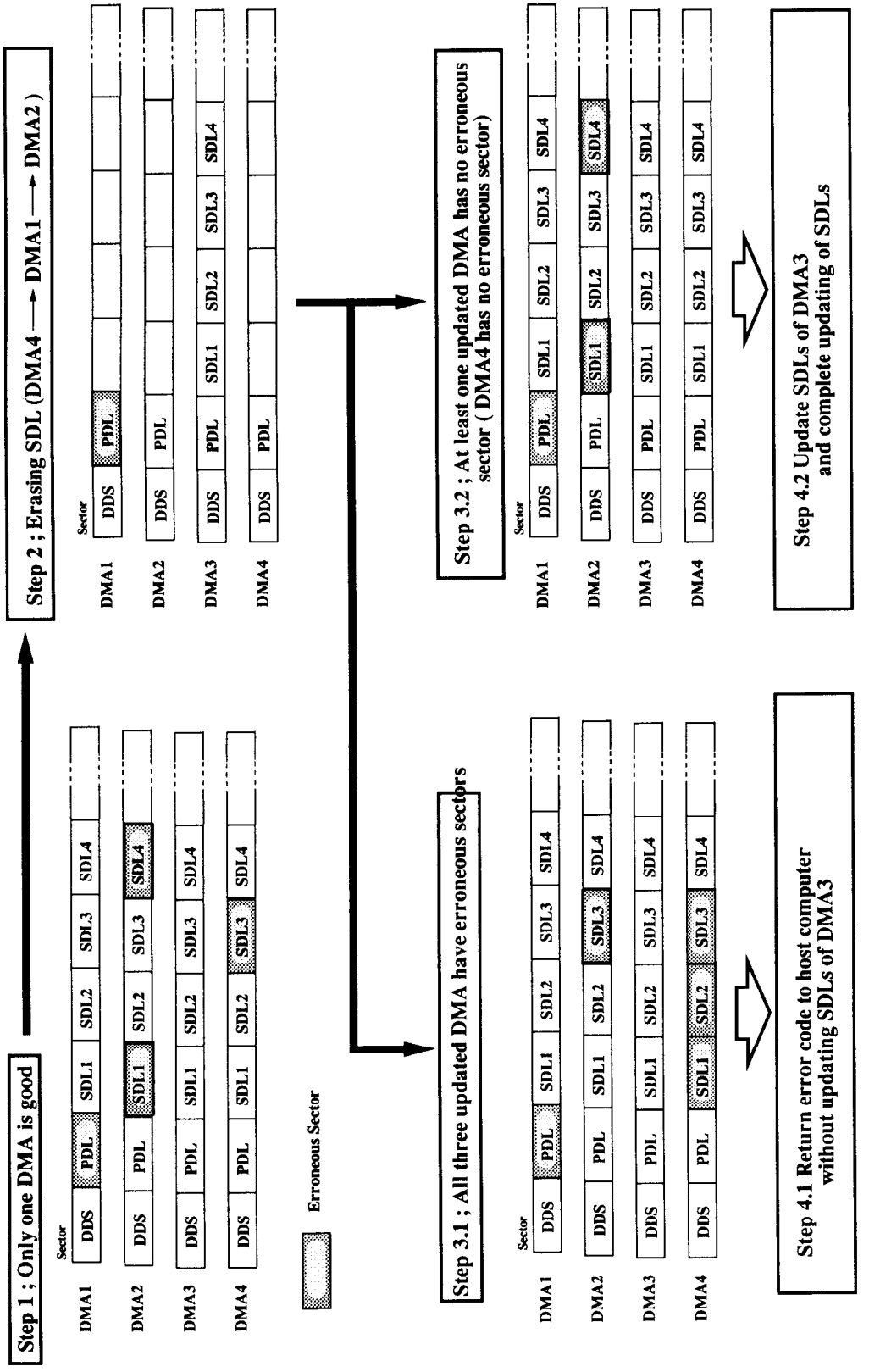

Figure 8 - Example for order of erasing/writing DMA during updating of SDL (see.6.3.2)

Copyright International Organization for Standardization
Provided by IHS under license with ISO
No reproduction or networking permitted without license from IHS
Not for Resale

ICS 35.220.30

Descriptors: data processing, information interchange, data storage devices, optical disks, optical disk cartridges, management, track formats, defects.

Price based on 16 pages

Copyright International Organization for Standardization
Provided by IHS under license with ISO
No reproduction or networking permitted without license from IHS Not for Resale