TECHNICAL REPORT

ISO/IEC TR 12075

First edition
1994-04

Information technology – Customer premises cabling – Planning and installation guide to support ISO/IEC 8802-5 token ring stations

Technologie de l'information –
Câblage des locaux de clients – Guide de planification et d'installation pour les stations en anneau à jetons de l'ISO/CEI 8802-5



Numéro de référence
Reference number
IEC/ISO TR 12075(E): 1994

Copyright International Organization for Standardization
Provided by IHS under license with ISO
No reproduction or networking permitted without license from IHS
Not for Resale

© ISO/IEC 1994
All rights reserved. No part of this publication may be reproduced or utilized in any form or by any means, electronic or mechanical, including photocopying and microfilm, without permission in writing from the publisher.

ISO/IEC Copyright Office • Case Postale 131 • CH-1211 Genève 20 • Switzerland

Printed in Switzerland

Copyright International Organization for Standardization
Provided by IHS under license with ISO
No reproduction or networking permitted without license from IHS
Not for Resale

Clause Page

Foreword 5
1 Scope 7
1.1 Normative references 7

2 Definitions and abbreviations 8

3 Topology in principle 11
3.1 System overview 11
3.2 Basic topology 11
3.3 Using bridges in a token ring network 17

4 Guidelines for topological parameters 18
4.1 Building rings using the recommended topology and distances 20

5 Requirements on cabling 22
5.1 Requirements on STP cabling 22
5.2 Other cabling 22

6 Cabling topology 22
6.1 Content of chapter 22
6.2 Planning considerations 23
6.3 Cabling structure 23
6.3.1 Trunk cabling 23
6.3.2 Lobe cabling 23
6.3.3 Cable length 23
6.3.4 Cable length for optical fibre cables 23
6.4 Positioning cabling components 23
6.4.1 Centralised arrangement 23
6.4.2 Decentralised arrangement 24
6.4.3 Placement of concentrators 25
6.5 Lobe and Trunk Cable Connections 25

7 Guidelines for determining allowable network configurations 26
7.1 Attenuation Limits 28

8 Guidelines for documentation 29
8.1 General Guidelines 29
8.2 Example 29

9 Relevant safety standards 32

10 Installation considerations 33
10.1 Purpose 33
10.2 Recommended separation distances to power lines 33
10.2.1 Recommended separation for STP cables 33
10.2.2 Recommended cable separation for optical fibre cables 33
10.3 Telecommunications Closet Considerations 34
10.3.1 Telecommunications closet location 34
10.3.2 Cable installation in ducts 34
10.4 Guidelines for cabling between telecommunications closets 34
10.4.1 Guidelines for balanced cabling between telecommunications closets 34
10.4.2 Guidelines for optical fibre cabling between telecommunications closets 34
10.5 Bonding the equipment to ground 34

11 Use of unshielded twisted pair as an alternative medium for lobes for 4 Mbit/s token ring operation 35
11.1 Scope 35
11.2 Overview 35
11.3 Unshielded twisted pair cabling characteristics 35
11.3.1 Cable construction 35
11.3.2 Attenuation 35
11.3.3 Near end crosstalk (NEXT) attenuation 36
11.3.4 Characteristic impedance 36

Copyright International Organization for Standardization
Provided by IHS under license with ISO
No reproduction or networking permitted without license from IHS
Not for Resale

Clause

Page

11.4 Medium Interface Connection 37
11.5 Cable Routing 38
11.6 Bit error rate 38
11.7 Safety 38
11.7.1 Installation and maintenance guidelines 38
11.8 Outlet administration 38
11.9 Future work 38

12 Testing of installed cabling 39

Figures

1, Basic topology for token ring circuits 12
2, Partitioning of PHY and medium 13
3, Basic Topology for Token Ring Circuits 14
4, Trunk cabling with back-up paths 15
5, Trunk cabling with back-up path in use 15
6, General Topology of Trunk Path for token ring 17
7, Example of a Network with Bridges and a Backbone Ring 18
8, Topology of Customer Premises Cabling 20
9, Centralized concentrator arrangement 24
10, Decentralised Concentrator Arrangement 25
11, Transmission path continuity at the TCU 26
12, Multi-Telecommunications closet configuration 27
13, Restored ring for worst case 28
14, Building labels 30
15, Horizontal labels 31
16, Work area outlet labels 32
17, Near end crosstalk attenuation 36
18, Pin assignment for IEC 603-7 connector, front view 37

Tables

1, Cabling Limits, General Guidelines 19
2, Cabling limits, detailed trunk cabling guidelines 19
3, 150 Ω Shielded twisted pair cable characteristics for 4 and 16 Mbit/s 22
4, Minimum cable separation from sources of interference 33
5, Maximum recommended cable attenuation 36
6, Attachment to the modular data connector 37

Copyright International Organization for Standardization
Provided by IHS under license with ISO
No reproduction or networking permitted without license from IHS
Not for Resale

Foreword

ISO (the International Organization for Standardization) and IEC (teh International Electrotechnical Commision) form the specialized system for worldwide standardization. National bodies that are members of ISO or IEC participate in the development of International Standards through technical commitees establisshed by their respective organizations to deal with particular field of thechnical activity. ISO and IEC technical commitees collaborate in fields of mutual interest. Other international organizations, govermental and non-govermental, in liason with ISO and IEC, also take part in the work.

In the field of information technology, ISO and IEC have established a joint technical committee, ISO/IEC JTC1.

ISO/IEC 12075, which is atechnical report of type 3, has been prepared by ISO/IEC Joint Technical Committee JTC 1/SC 25.

The main task of technical committes is to prepare International Standards. In exceptional circumstances a technical committee may propose the publication of a technical report of one of the following types:

- type 1, when the required support cannot be obtained for the publication of an International Standard, despite repeated efforts;

- type 2, when the subject is still inder technical development or where for any other reason there is the future but not immediste possibility of an agreement on an International Stanndard;

- type 3, when a technical commitee has collected data of a different kind from that which is normally published as an International Standard ("state of the art" for example).

Technical reports of types 1 and 2 are subject to review within three years of publication, to decide wether they can be transformed into International Standards. Technical reports of type 3 do not necessarily have to be reviewed until the data they provide are considered to be no longer valid og useful.

In many cases, information in this technical report is subject to change. The working group expect to re-issue and update this report on a periodic basis to supply the international community with the latest information on evolving standardization activities.

--`,,```,,,,````-`-`,,`,,`,`,,`---

Copyright International Organization for Standardization
Provided by IHS under license with ISO
No reproduction or networking permitted without license from IHS

Not for Resale

--`,,```,,,,````-`-`,,`,,`,`,,`---

Copyright International Organization for Standardization
Provided by IHS under license with ISO
No reproduction or networking permitted without license from IHS

Not for Resale

Information technology - Customer premises cabling

Planning and installation guide to support ISO/IEC 8802-5 token ring stations

1 Scope

The purpose of this technical report is to sypplement the token ring standard ISO/IEC 8802-5, and the annex "Information technology - Local and metropolitan area networks - Token ring access method and physical layer specification - Recommended practice for use of unshielded twisted pair cable (UTP) for token ring data transmission at 4 Mbps." with information relating to suitable transmission media and installation guidance, without placing undue constraint on implementers regarding detailed sizing and configuration. The recommendations and topologies outlined here draw on and are complementary to the ISO/IEC generic cabling Standard, 11801, under development at the approval of this guide.

This report therefore includes the following:

- a description and recommended values of characteristics of the appropriate elements within a token ring network;
- the cabling system topology with recommended distances;
- transmission requirements of suitable medium for 4 and 16 Mbit/s token rings;
- guidelines for the design, planning and installation of cabling systems to support 4 and 16 Mbit/s token rings;
- guidance on documentation and labelling to support token rings.

The procedure to check the suitability of installed cabling to support 4 or 16 Mbit/s token rings is a topic for future study.

This technical report addresses the use of both shielded and unshielded lobe cabling. Unless otherwise noted within the text, all cabling recommendations specifically refer to using 150 Ω shielded twisted pair lobe cabling.

When ISO 8802-5 is reissued this report should be updated to realign with both that guide and the Generic wiring standard.

1.1 Normative references

The following normative documents contain provisions which, through reference in the text, constitute provisions of this technical report. At the time of publication, the editions indicated were valid. All normative documents are subject to revision, and parties to agreements based on this technical report are encouraged to investigate the possibility of applying the most recent editions of the normative documents indicated below. Members of IEC and ISO maintain registers of currently valid International Standards.

IEC 96-1: 1986, Radio-frequencey cables-Part 1: General requirements and measuring methods.

IEC 603-7: 1990, Connetors for frequencies below 3 MHz for use with printed boards - Part 7: Detail specification for connectors, 8-way, included fixed and free connectors with common mating features.

ISO/IEC 8802-5: 1992,Information processing systems - Local and metropolitan area networks - Part 5: Token ring access method and physical layer specifications.

ISO/IEC 11801: General cabling standard (under consideration)

Copyright International Organization for Standardization
Provided by IHS under license with ISO
No reproduction or networking permitted without license from IHS
Not for Resale

2 Definitions and abbreviations

BD

Building Distributor: The combination of functional elements (e.g . patch panels, multiplexers). Used to connect between the building and campus cables.

Balanced cable: A cable consisting of one or more symmetrical cable elements. Construction of conductors belonging to a transmission circuit are identical and twisted together using a certain lay.

Back-up path: Spare transmission path in trunk cabling, normally usedfor signal transmission only when there is a failure on the main ring path.

Bridge: MAC sublayer interconnector of rings.

Cabling: The collection of all cables, connectors, patch panels and other passive components which compromise the telecommunication infrastructure.

Cable: An assembly of one or more cable elements contained within a common sheath or tube.

Cable element: A number of insulated conductors or optical fibres. Examples of cable elements are: pair, shielded pair, quad, shielded quad.

CD

Campus Distributor: Premises main distributor

Channel: Data path from any transmitting station's Medium Interface Connector (MIC) to the next downstream receivers MIC, including possibly, its own. (Also referred to as Transmission Path)

Concentrator: A device which provides the function of multiple Trunk C oupling Units (TCUs). Token ring concentrators interface to the main transmission path with two ports, ring-in and ring-out. Data Terminal Equipment (DTEs) are attached to the concentrators' lobe attachment ports via lobe cabling.

Converter: Special type of repeater which converts signals using diffe rent media types.

Distributor: See Telecommunication Closet.

Drive Distance: The maximum distance a signal can propagate along a channel from transmitter to receiver, and still be within specification. Drive distance is a function of line losses and component losses such as those from connectors and TCUs. Line losses can be characterized as losses with a square root of frequency characteristic, and component losses can be characterized as having a fixed component plus a square root of frequency component.

DTE

Data Terminal Equipment: Any device which attaches to the LAN and communicates via the LAN protocols on that LAN.

DTE attachment cable: A short flexible cable (generally less than 3 meters), connecting the DTE to the MIC.

--`,,```,,,,````-`-`,,`,,`,`,,`---

Copyright International Organization for Standardization
Provided by IHS under license with ISO
No reproduction or networking permitted without license from IHS

Not for Resale

Equivalent station count: Complex devices and links which contain more than a single retiming circuit must be characterised by the number of retiming circuits they contain. This count is called "Equivalent Station Count".

HD Horizontal Distributor: The telecommunication distributor which houses the termination for the horizontal cabling.

Horizontal cabling: The horizontal cabling subsystem extends from a floor distributor to the telecommunications closet outlet(s) connected to it. The subsystem includes the horizontal cables, the mechanical termination of horizontal cables at the floor distributor, the cross connections at the floor distributor and the telecommunications closet outlets.

Hybrid cable: A cable consisting of a combination of two or more cable elements of different characteristic.

IEEE Institute of Electrical and Electronics Engineers

IEC International Electrotechnical Commission

ISO International Organisation for Standardisation

LAN Local Area Network

Link: A section of the token ring transmission path, without station attachments, bounded by repeaters or converters. A link is characterized by its latency and associated accumulated jitter. At its input and output it must be able to receive any valid receive level signal, and must transmit signals conformant with the transmit specifications at a MIC. The link may or may not use proprietary signalling within it. Neither transmission parameters nor signal coding are defined for the link.

Lobe cabling: The cabling used to interconnect the MICs to the TCUs. This cabling includes all horizontal cabling, patch cables and possible work area cabling between TO and MIC. The lobe cable only carries signals when the station attached to the lobe is active on the ring.

LLC Logical Link Control

Main ring path: Primary transmission path in the trunk cabling. The Main Ring Path carries the data in the primary direction. (Contrast with Back-up path)

Medium: The cabling on which the message may be transmitted.

MAC Medium Access Control: The portion of the terminal that controls and mediates the access to the ring.

MIC Medium Interface Connector: The connector situated between the terminal and trunk coupling unit (TCU) at which all transmitted and received signals are specified. It is one of the connectors of the mated pair at the measurement reference point. Typically, the DTE attachment cable is connected to the wall outlet, and this connection point is the MIC. Otherwise, the MIC is generally at the data connector end of the attachment cable. Other physically identical connectors used elsewhere in the system are not referred to in this guide as MIC connectors.

NEXT Near End Cross Talk

Copyright International Organization for Standardization
Provided by IHS under license with ISO
No reproduction or networking permitted without license from IHS
Not for Resale

Pair: A cable element which consist of two insulated conductors forming a transmission line circuit.

Patch cables: Short flexible cables required to connect fixed cabling and active and passive components in a telecommunications closet.

Patch panel: Termination point for building cabling in a telecommunications closet. Attachment of that cabling to repeaters and concentrators is typically done with short sections of cable called patch cables.

PHY Physical Layer

Repeater: Physical layer interconnector of rings. Provides for physical containment of the channels, dividing the ring into segments. A repeater can receive any valid token ring signal and retransmit it with the same characteristics and voltage levels as a transmitting station.

Router: Network layer interconnector of LANs (rings, buses, etc.)

Ring in: The port of an element that receives signal from the main ring path on the trunk cable, and provides connectivity to the ring out port of the immediate upstream element.

Ring out: The port of an element that transmits the output signal to the main ring path on the trunk cable, and provides connectivity to the Ring In port of the immediate downstream element.

Ring segment: Section of transmission path bounded by repeaters or converters. Ring segment boundaries are critical for determining the transmission limits that apply to the devices within the segment, because no transmission channels cross the ring segment boundaries.

Shielded cable: An assembly of one ore more cable elements wrapped by an overall static shield contained within a common sheath or tube.

Shielded pair: A cable element which compromises two insulated conductors forming a transmission line circuit and twisted together covered by a static shield.

Shielded star quad: A cable element which compromises four insulated conductors twisted together, two diametrically facing conductors forming a transmission line circuit and over which is applied a static shield.

STP **Shielded Twisted Pair cable:** Shielded twisted pair cable is normally used to mean shielded twisted pair cables or shielded quad cables independent of their characteristic impedance. However, when used in this guide the expression refers specially to those shielded twisted pair or shielded quad cables with a high frequency characteristic impedance of 150 $\Omega \pm 15\ \Omega$. In addition to having an overall shield, the individual pairs may be shielded.

Star quad: A star quad consists of four conductors twisted together for the length of the cable. Opposite conductors must be used as a pair.

TO **Telecommunications Outlet:** A connecting point, in a fixed position, where the horizontal cabling terminates. The telecommunication outlet provides the interface to the work area cabling.

Trunk cable: The transmission medium for interconnection of concentrators and TCUs providing a main signal path and a back-up signal path, exclusive of the lobe cabling.

Copyright International Organization for Standardization
Provided by IHS under license with ISO
No reproduction or networking permitted without license from IHS
Not for Resale

TCU Trunk Coupling Unit: A physical means that enables a station to connect to a trunk cable. The trunk coupling unit contains the means for inserting the station into the ring or, conversely, bypassing the station.

TC Telecommunications Closet (distributor): The space provided in a building where the horizontal and backbone cabling terminates. The Telecommunication Closet houses the TCUs, concentrators, repeaters etc. in addition to housing the equipment associated with the telecommunication wiring system. The Telecommunications Closet is sometime referred to as a Distributor.

Trunk path: That portion of the transmission path which always carries signals independent of which stations are active on the ring and which are not.

UTP Unshielded twisted pair: UTP normally refers to unshielded twisted pair cables or star quad cables independent of their characteristic impedance. However, when used in this guide, UTP or unshielded twisted pair refers specifically to those unshielded twisted pair cables or star quad cables which meet the specifications of 100 Ω Category 3 UTP. Shielded cables meeting the 100 Ω Category 3 specifications are included with in this definition.

Work area cabling: Additional cabling required to go from the outlet to the DTE attachment cable when the DTE is not placed near the outlet.

3 Topology in principle

3.1 System overview

The token ring network is a physical star connected to a logical ring that accommodates (allows for) the connection of up to 250 attaching devices (processors, printers controllers, repeaters, converters etc.) per ring through specially designed adapters installed in the attaching devices. The ring is established by connecting all attaching devices to Trunk Coupling Units (TCUs) using the transmission media described in clause 5. During operation the TCUs will establish a logical ring of all active attached devices and will bypass all inactive attached devices. The attaching device interfaces with the adapter to use the ring for sending and receiving data. The ring is used as follows:

The attaching device notifies the adapter that it has a message to send. Upon receipt of a token, the adapter appends the message, together with both the sender's and the recipient's addresses on the token circulating around the ring. The token then becomes a frame.

The token ring network is a baseband system. Messages are transmitted and received at a rate of either 4 or 16 Megabits per second (Mbit/s). The data rate at which a single ring operates is determined by the data rate of the adapters in the attaching devices. All attaching devices on a single ring must have adapters that operate at the same data rate. All normal network operations are performed without user intervention once the message has been directed to the adapter. The operator of the attaching device does not have to be aware of routing and protocol procedures.

This report focuses on the guidelines for establishing single rings. It is possible to create a network that consists of individual rings interconnected with bridges or routers. With such a configuration, messages are passed from an attached device on one ring through a bridge or routed to an attached device on another ring. For a short discussion of design considerations with bridges see 3.3.

3.2 Basic topology

The basic topology for token-ring networks as defined by ISO 8802-5 is a set of trunk coupling units (TCUs) connected together in a ring via trunk cabling as shown in figure 1. All discussions of token ring topology dealt with location of the ring components and are independent of their state, i.e. the configuration is independent of which devices are active at any particular time.

--`,,```,,,,````-`-`,,`,,`,`,,`---
Copyright International Organization for Standardization
Provided by IHS under license with ISO
No reproduction or networking permitted without license from IHS
Not for Resale

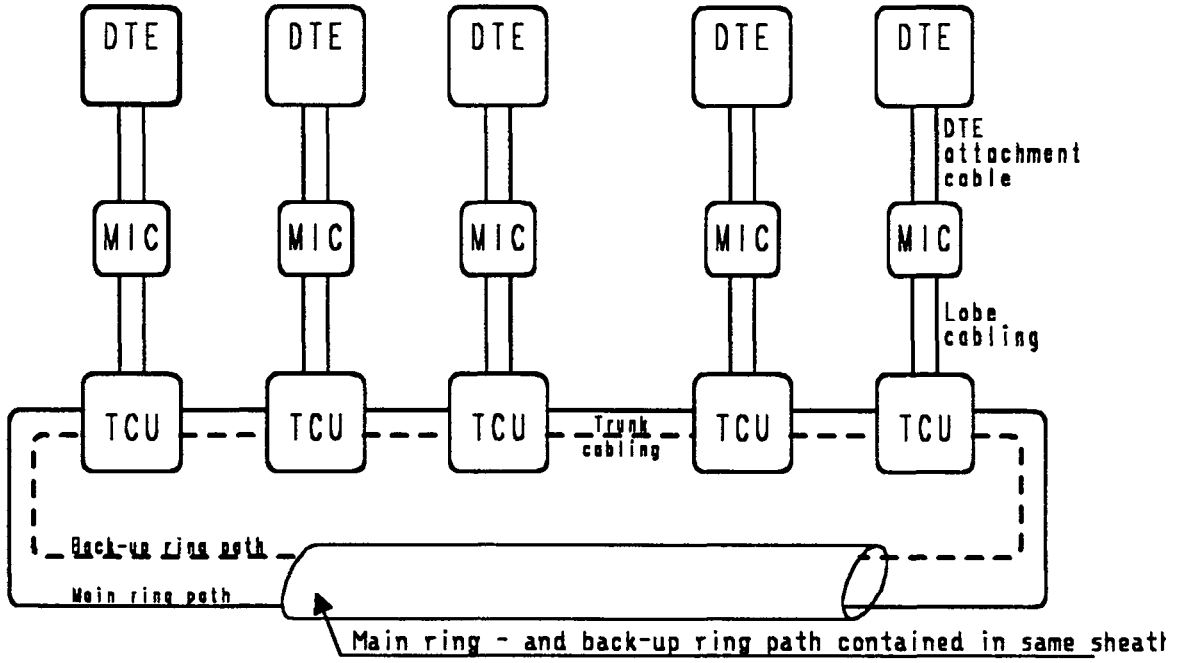

Figure 1 - Basic topology for token ring circuits

The cabling interconnecting TCUs is defined as the trunk cabling. Connected to each TCU is lobe cabling which terminates in a Medium Interface Connector (MIC).

Typically, the lobe cabling consists of the following:

- **a patch cable from the TCU to the horizontal cabling.**
- **the horizontal cabling from the telecommunications closet to the telecommunications outlet.**
- **any work area cabling from the outlet to the DTE's MIC.**

The TCU has two states, the insert state and the bypass state. In the bypass state, the TCU directly routes the incoming signal port to the trunk cable to the outgoing signal on the trunk cable. When a DTE is actively participating in the ring, the incoming signal from the trunk cable is routed to the DTE's receiver via a first signal path of the lobe cable. The DTE then transmits via a second signal path in the lobe cabling to the outgoing signal path on the trunk cable (see figure 2).

Connected to each MIC is a DTE. In actual implementation, horizontal cabling normally runs from the work area to centralised telecommunication closets. The TCUs may be built singly or combined; as multi-TCU concentrators.

Copyright International Organization for Standardization
Provided by IHS under license with ISO
No reproduction or networking permitted without license from IHS
Not for Resale

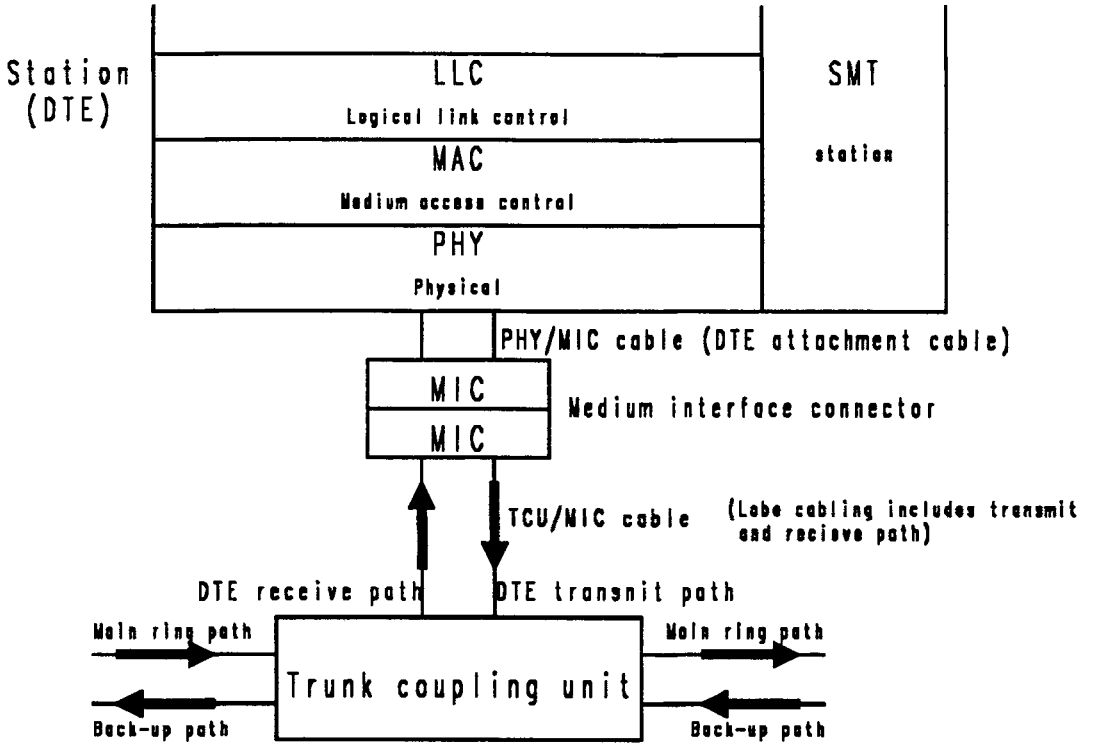

Figure 2 - Partitioning of PHY and medium

Figure 3 shows a representative token ring network spanning two telecommunications closets, one per floor. All attaching devices are electrically attached to concentrators in one of the telecommunications closets. As seen in the figure, the major elements of the token ring cabling system are:

1) **The horizontal cabling system: the cabling between the telecommunications outlets and the patch panels in the telecommunications closet.**

2) **Optional work area cables used to connect the MIC to the outlet.**

3) **DTE Attachment cables used to connect the DTE to the MIC.**

4) **Patch panels usually located in telecommunications closets, where the horizontal cables terminate.**

5) **The patch cables which are used:**

   - from devices including concentrators to the fixed cabling;

   - as inter-connect cables;

   - as trunk cabling between devices (e.g. connecting the concentrators together).

6) **Equipment racks in the telecommunications closet to hold the patch panels and the components in this room (concentrators, repeaters, etc.).**

7) **The TCUs (concentrators).**

8) **Permanently installed trunk cabling to connect widely separated TCUs and concentrators.**

Copyright International Organization for Standardization
Provided by IHS under license with ISO
No reproduction or networking permitted without license from IHS
Not for Resale

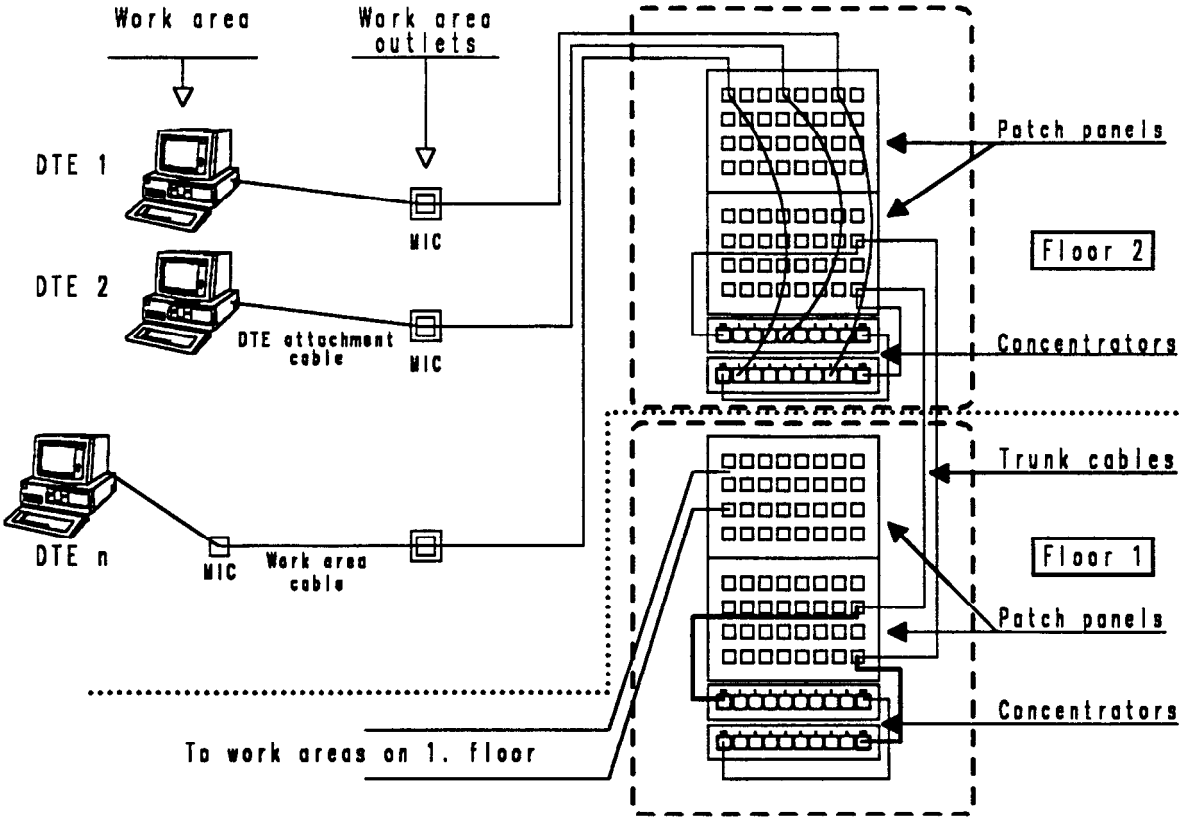

Figure 3 - Basic Topology for Token Ring Circuits

The lobe cabling includes all cable segments between the TCU and the associated MIC. Included within the lobe cabling are the signalling paths to and from the DTE. Both these paths are bypassed (not part of the ring path) when the attaching device is inactive, i.e. not participating on the ring.

The trunk cable contains two signalling paths, a main ring path, and a back-up path which is normally unused (see figure 4). The back-up path is exploited during network problem determination and network restoration actions in the following way: If there is a suspected or known broken cable between telecommunications closets, the signal is either automatically or manually diverted from the broken segment to the back-up path. Some trunk cable devices such as concentrators and repeaters can automatically detect a broken ring segment and reroute the signal onto the back-up path, isolating the broken segment. Where these devices are not employed, the broken cable is disconnected at each termination point. Since the copper data connectors used for token ring LANs are self shorting (see figure 5), the signal will wrap to the trunk cabling's second transmission path, the back-up path. The trunk cabling will still form a logical ring with the signal wrapping at the two self shorted data connectors. When the broken cable is repaired or replaced and reconnected, the ring will again utilise only the main ring path in the trunk cabling. A detailed understanding of these problem determination and restoration procedures is necessary in planning the design of a token ring since the path that the data may have to take under these conditions is different from the normal path. Therefore, ring design must accommodate it. In some commercially available systems, engineering aids (maximum distance tables) do not account for trunk cabling breaks. These systems have a main ring path consisting of patch cables interconnecting TCUs and concentrators, and do not foresee the back-up path in the trunk cabling.

Copyright International Organization for Standardization
Provided by IHS under license with ISO
No reproduction or networking permitted without license from IHS
Not for Resale

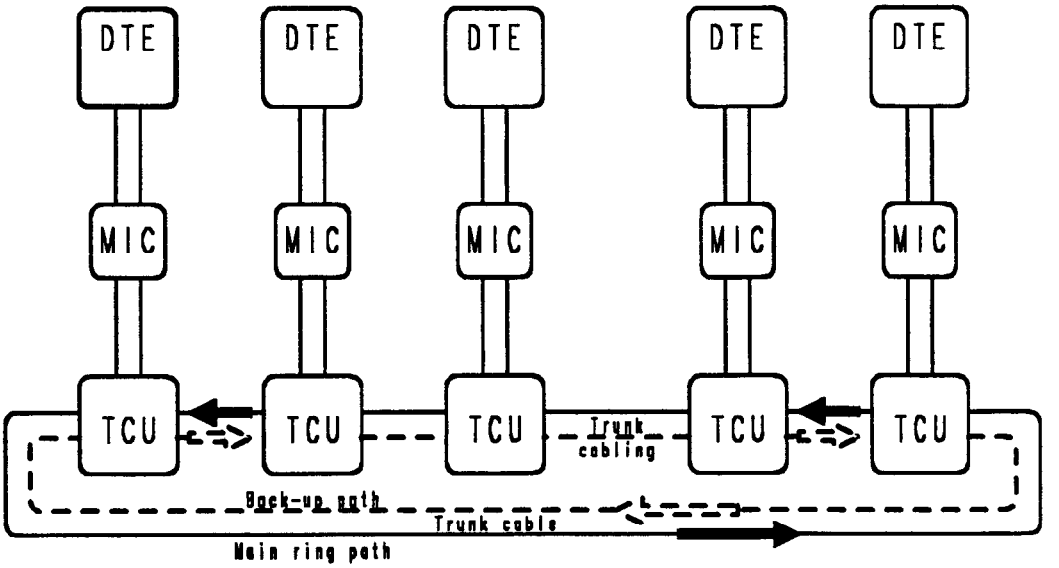

Figure 4 - Trunk cabling with back-up paths

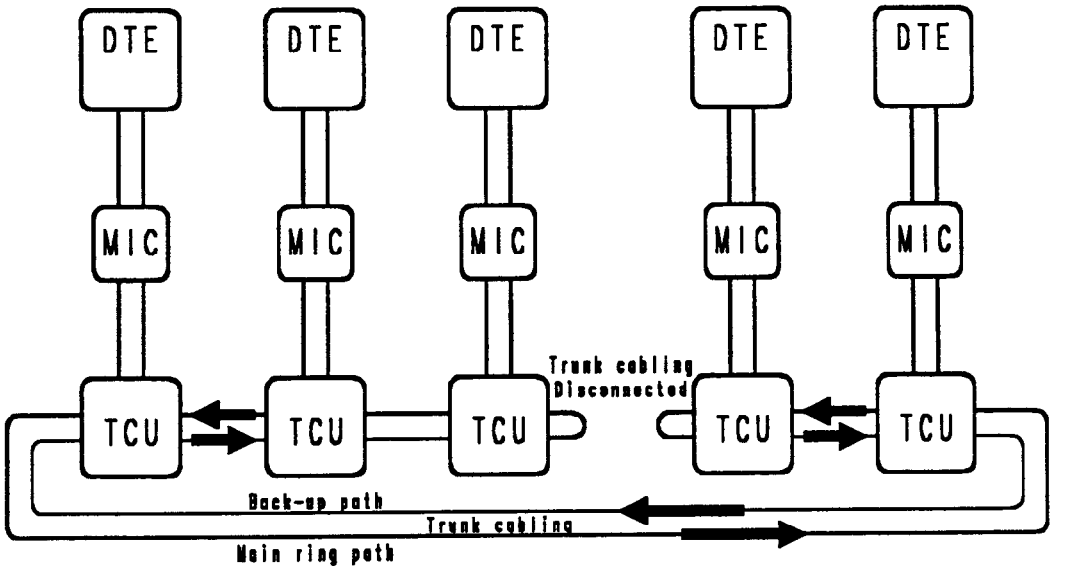

Figure 5 - Trunk cabling with back-up path in use

Copyright International Organization for Standardization
Provided by IHS under license with ISO
No reproduction or networking permitted without license from IHS
Not for Resale

As the main ring path grows in size, the requirement to use repeaters or active links emerges. This requirement is based on the need to maintain adequate signal characteristics at each active station on the ring independent of the activity status of each of the rest of the stations on the ring. The ISO 8802-5 standard specifies the signaling requirements at the MIC on the lobe cabling, and mentions the use of repeaters, but otherwise leaves open the specification of signal propagation on the main ring path. The minimum receive signal levels shall be maintained for rings that have been reconfigured to enable the performance of problem determination and restoration procedures. Note that some commercially available repeaters use the back-up path available in the trunk cable by automatically wrapping signal from the main ring path to the back-up path and vice versa in cases of power outages and main ring path failures.

Rings containing repeaters and converters, as seen in figure 6, are logically split into ring segments and links for purposes of determining allowable configurations. At the ring segment boundary there is a requirement that all incoming signals meet the ISO 8802-5 receive signal specifications and all outgoing signals meet the ISO 8802-5 transmit signal specifications. This requirement is applicable to the main ring path (in the trunk cabling) and to any back-up path.

On a link, any propagation which satisfies overall network bit error rate and accepts and delivers allowable signal levels within the jitter requirements of the system, may be used. Each link be capable of receiving any signal that has valid receive voltage levels, and transmit onto the trunk cable signals with valid transmit levels.

Since accumulated jitter is a basic characteristic of the ring, the active links also be characterised by the amount of accumulated jitter added to the ring. This characterisation is done by stating the added jitter in terms of equivalent stations added to the ring. Added delay, if significant, also be specified.

Within a ring segment, transmission limits are determined by the maximum attenuation of any signal within that segment. In addition to the cable attenuation, segment attenuation can include the losses associated with any or all of the TCUs in a bypass state.

Figure 6 shows the general topology for the main ring path of token rings. A ring can pass through one or more telecommunications closets and may or may not contain repeaters in the trunk cabling between TCUs. In addition, there may be one or more links.

Copyright International Organization for Standardization
Provided by IHS under license with ISO
No reproduction or networking permitted without license from IHS
Not for Resale

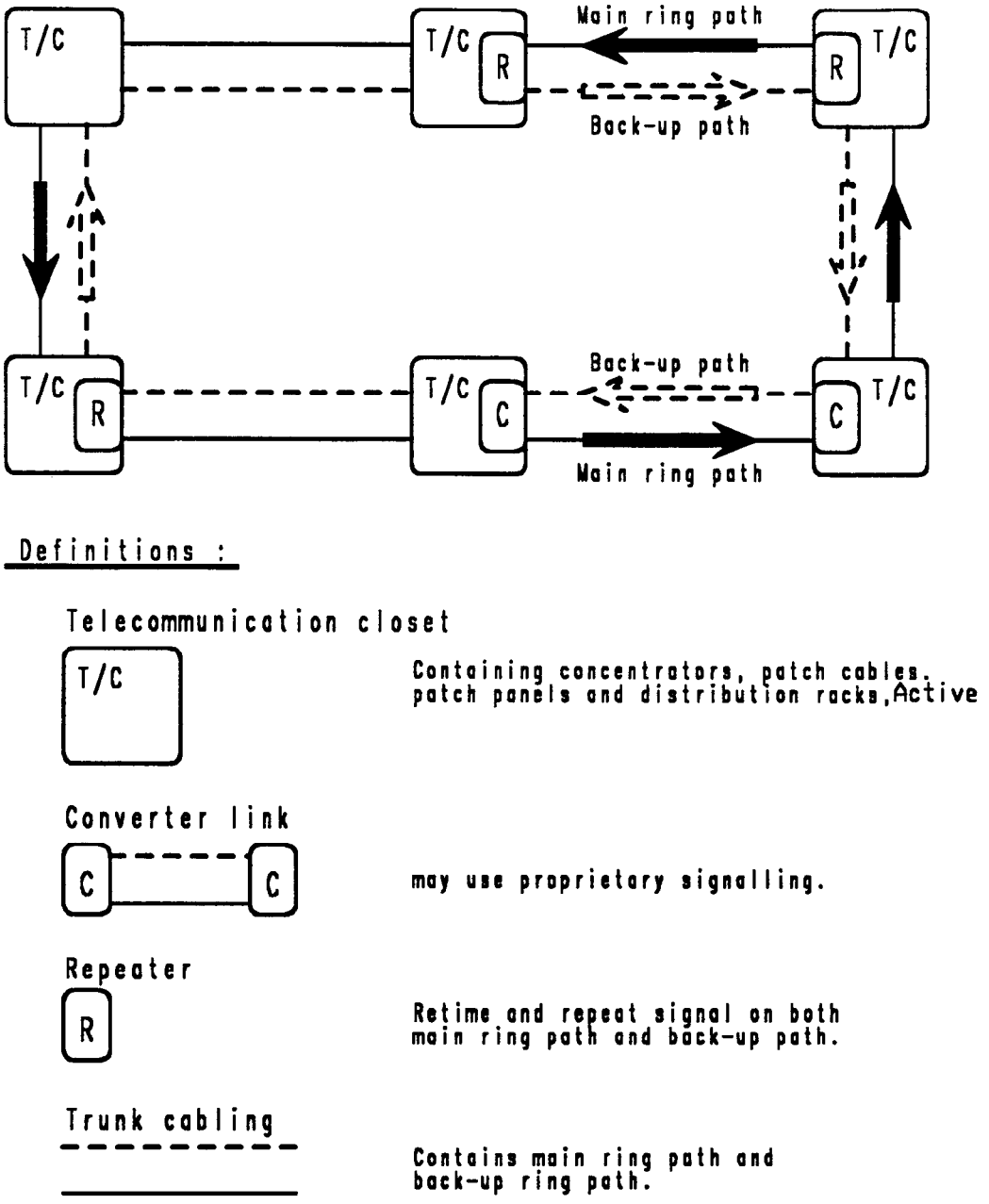

Figure 6 - General Topology of Trunk Path for token ring

3.3 Using bridges in a token ring network

Bridges can be used to extend a local area network both in station count and over larger distances by providing communications channels between rings. One bridging strategy used by relatively small networks is to daisy-chain rings together. Redundancy can be provided here by connecting the first ring and last ring together. For larger networks including campuses, a more structured approach is usually taken. Local rings, servicing a single building, portion of a building, or department, are bridged to rings covering a segment of the campus. These can be bridged to rings spanning larger segments of the campus, or even the entire campus.

At any level of interconnection, multiple bridges or multiple rings can be used to increase the availability of the network, as well as physical flexibility and the available throughput. Figure 1 on page 18 shows one configuration of creating a network by tying local rings together to a common backbone ring using bridges.

Copyright International Organization for Standardization
Provided by IHS under license with ISO
No reproduction or networking permitted without license from IHS
Not for Resale

The extra bridge between local ring No. 2 and the back-bone ring, provides increased throughput between those rings, as well as a back-up path protecting the communication channel in event of a device failure in the parallel bridge. The bridge between local rings Nos. 1 and 2 provides additional channel capacity between these rings and helps off-load traffic on the back-bone ring.

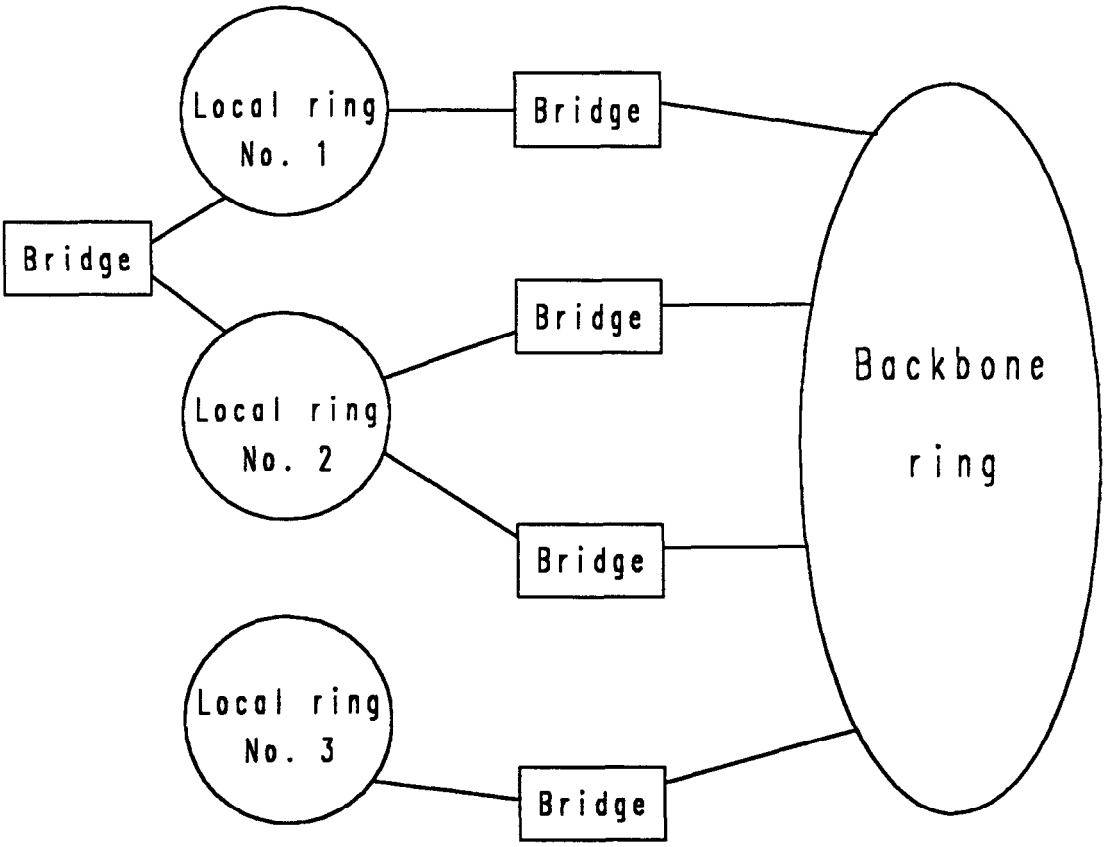

Figure 7 - Example of a Network with Bridges and a Backbone Ring

4 Guidelines for topological parameters

The topology shown in figure 8, is based on collocating token ring telecommunications closets containing the concentrators and patch panels, with the building distributor and horizontal distributors for the telecommunications wiring. This is the topology recommended. Wiring guidelines are presented to provide guidance which will allow use of the telecommunications wiring as a building utility which can support any particular LAN configuration or LAN speed. The most general cabling guidelines are shown in table 1, and serve as a basis for the cable requirements presented in table 3.

Copyright International Organization for Standardization
Provided by IHS under license with ISO
No reproduction or networking permitted without license from IHS
Not for Resale

Lobe cabling (STP / UTP [1])	100 m [2])
Trunk cabling (STP)	200 m
Trunk cabling (optical fibre)	2000 m

1) See clause 11 for performance limitations using unshielded cabling.

2) Note that lobe cabling includes work area cabling and patch cables. The horizontal cabling should be limited to 90 m.

Table 1 - Cabling Limits, General Guidelines

More detailed recommendations for trunk cabling are presented in table 2. This table presents recommendations on the use of 150 Ω shielded twisted pair (STP) cable or fibre, based on the application speed (4 Mbit/s only, or both 4 and 16 Mbit/s support). "Recommended" distances are based on a cabling infrastructure which will provide maximum flexibility and support for a wide variety of attaching products from various manufacturers. "May be used" distances will allow for adequate configuration flexibility, but with a restricted set of available attachment devices to support these distances. "Not recommended" distances, either have no solutions, or only a very limited set of specializsed devices to support them.

Run length meter	Mbit/s	STP *)	Fibre *)
200 - 2.000	4 and 16	3	1
15 - 200	4 and 16	2	1
Less than 15	4 and 16	1	2
400 - 2.000	4 only	3	1
50 - 400	4 only	2	2
Less than 50	4 only	1	2
*) 1-Recommended, 2-May be used, 3-Not recommended			

Table 2 - Cabling limits, detailed trunk cabling guidelines

Maximum usable distances are dependent on token ring data rate, choice of products used and for copper cables of maximum cable temperature during token ring operation, and for optical fibre, specific optical transmission.

The recommendations in table 2 are a function of the ring speed and the products used. Actual product selection may affect the number of repeaters required for a particular token ring implementation. By following these guidelines, the cable plant should not constrain product choice.

Copyright International Organization for Standardization
Provided by IHS under license with ISO
No reproduction or networking permitted without license from IHS
Not for Resale

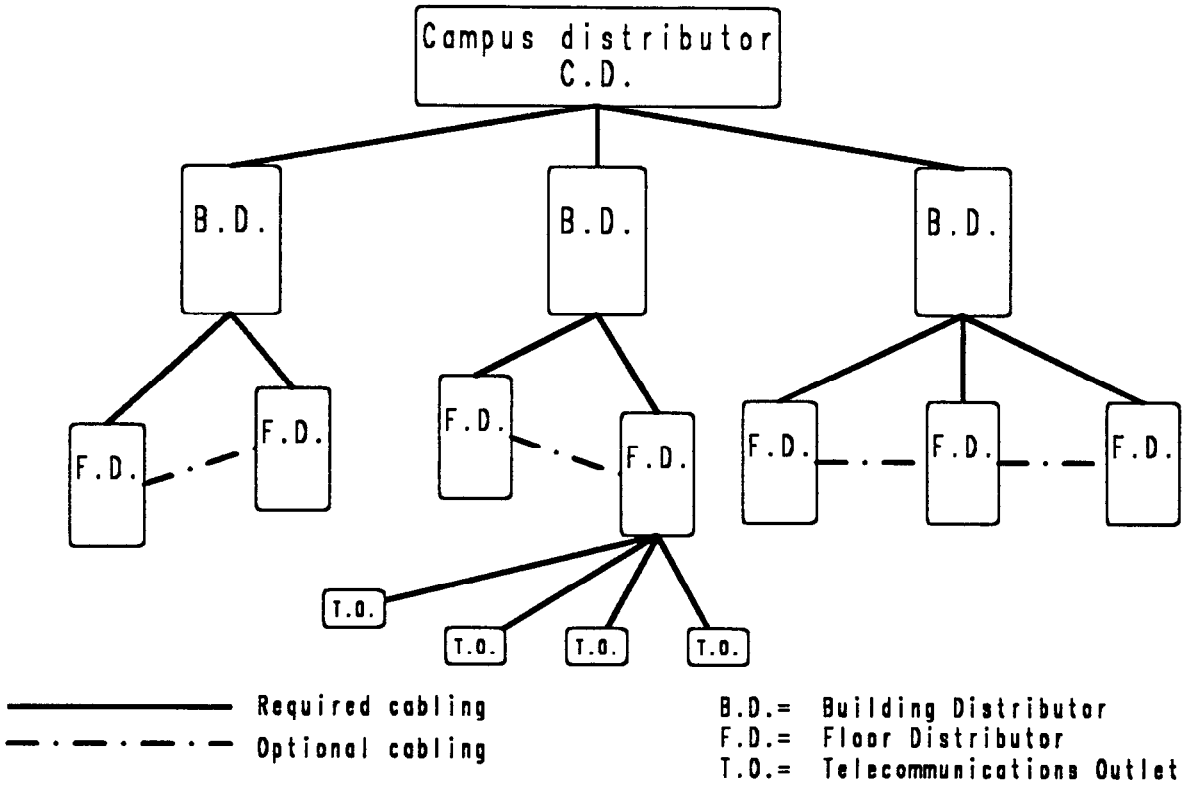

Figure 8 - Topology of Customer Premises Cabling

4.1 Building Rings Using the Recommended Topology and Distances.

The primary assumptions about the topological parameters are based on the way customer premises are wired as shown in the campus wide network configuration of figure 8. This figure gives the general guidelines for the physical cabling to support 4 or 16 Mbit/s token ring installations. The cabling distances and characteristics described here were chosen to maximise token ring configuration flexibility. Depending on the specifications of products used, active equipment may be required in some or all of the telecommunication closets. The maximum allowable attenuation in any transmission path is given in 7.1.

The media to be used to support 4 and 16 Mbit/s token ring applications are as follows:

For CD - BD, BD - BD, BD - HD, and HD - HD, use optical fibre or STP

Cable runs over 200 m (with maximum recommended run lengths of 2 km) should be implemented in multimode optical fibre. Runs between 15 and 200 m may be either STP or optical fibre depending on the specific devices planned for ring installation. Both may be installed initially for future flexibility. For runs less than 15 m, STP will provide suitable capability, although fibre may still be chosen as an alternate, or in addition to STP depending upon ring hardware plans.

For HD - Outlet, use STP

STP is the specified medium from HD to Outlet and should be limited in length to no more than 90 M. For information on other cables see clause 11.

Generally, the cabling is planned and implemented before specific token ring requirements or vendor selections have been made. Since the mid 1980s customer premises cabling trends for non-voice transmission have become more structured. A star cabling topology is employed from the office areas to a centralized telecommunications closet. In large buildings, separate telecommunications closets are maintained to serve each floor.

For token ring applications, communication between telecommunications closets in horizontal distributors is established by cabling from telecommunications closet/horizontal distributor to telecommunications

Copyright International Organization for Standardization
Provided by IHS under license with ISO
No reproduction or networking permitted without license from IHS
Not for Resale

closet/horizontal distributor directly or via the building distributor. Often, diverse routing is used for the ring completion path from last back to first telecommunications closet, so that physical disruption of a conduit carrying this trunk cabling will not result in splitting the ring into two separate segments. Note that a single break in the trunk cabling can be tolerated by removing the broken cable and employing the back-up path built into the cable. The ring will then be operational during the period of repair or replacement of the broken segment provided the initial ring design made allowance for the increased transmission path this configuration causes.

In a campus, there is normally one telecommunications closet per building which serves as the building's primary data entry point. Since token ring operation does not require direct connection of office equipment or data telecommunications closets to the building data entry point, there are no extra distance limitations from that point to the farthest telecommunications closet. General cabling guidelines may place limitations on this length. One proposed limit is 1.500 m.

For widely separated telecommunications closets, the cabling of choice connecting those closets is multimode optical fibre. 62,5/125 u the reference size multimode optical fibre is recommended. However, 50/125 u or other sizes can be used. Commercially available optical fibre converter/repeaters can typically span links of 2 km of 62,5/125 u optical fibre. Therefore, that is the recommended maximum spacing between adjacent telecommunications closets in an establishment or on a campus. Maximum link length can be computed based on the link's optical properties and on the allowable power budget.

The maximum recommended distance from DTE to TCU at the telecommunications closet as shown in table 1, is 100 m. When using this distance limit, the maximum cable attenuation (at 25 ^{o} C) for the lobe cable should not exceed 22 dB/km at 4 MHz nor 45 dB/km at 16 MHz. By wiring within these constraints, both 4 and 16 Mbit/s token rings can be configured as needed throughout the premises.

Copyright International Organization for Standardization
Provided by IHS under license with ISO
No reproduction or networking permitted without license from IHS
Not for Resale

5 Requirements on cabling

5.1 Requirements on STP cabling

Accurate reception of token ring signals is based on received signal levels as specified in ISO/IEC 8802-5, and on the minimisation of crosstalk noise and external noise by the cabling. If cables meeting the specifications of table 3 are used for building cabling the distances presented in tables 1 and 2 are met.

Parameter, units	Value and tolerance range [1])
Characteristic impedance Ω	150 ± 15 from 2 MHz to 20 MHz
NEXT attenuation (dB)	≥ 58 from 2 MHz to 5 MHz ≥ 40 from 5 to 20 MHz
DC resistance (each conductor) &ohm/km	≤ 58
Maximum attenuation [2]) dB/km	22 at 4 MHz, 45 at 16 MHz
Resistance unbalance 100(max R-min R)/min R (%)	≤ 4
Capacitance unbalance [3]) (Pair to ground) pF/km	≤ 1500
DC Insulation Resistance [00] [3]) G Ω · km	≥ 16
Transfer impedance [3]) m &ohm/m	< 20 measured below 10 kHz, or < 200 measured over the range of 2 MHz to 10 MHz

1) These parameters are based on experience with cable meeting these specification and with analysis based on these parameters. However these specification are not necessarily the limiting values for cable which would yield the required performance.

2) At other than 25 [oc] , the attenuation may increase for each 10 [oc] rise by 0,6 dB/km at 4 MHz and by 1,2 dB/km at 16 MHz. The use of higher attenuation cable is allowed, but may result in decreased distance limits and decreased configuration flexibility.

3) This value is measured at a test frequency that is within the range of 800 to 1000 Hz.

4) The 16 GΩ · km figure derives from the specification for a cable which has been sufficiently tested for token ring operation. This figure is believed to be non critical.

5) Transfer impedance is measured according to 7.1 of IEC 96-1.

Table 3 - 150 Ω Shielded twisted pair cable characteristics for 4 and 16 Mbit/s operation. All parameters are defined at 25 [o] C..

See clause 7 for application of these parameters to allowable network configurations.

5.2 Other cabling

Presently, optical fibre lobe attachment and 4 and 16 Mbit/s operation on UTP cabling are under consideration by IEEE 802.5, for incorporation within the standard ISO 8802-5. Use of UTP cabling for 4 Mbit/s token ring operation is discussed in Chapter 11.

6 Cabling topology

6.1 Content of chapter

The clause guides the user in planning network topology and cabling for an ISO 8802-5 token ring LAN.

Copyright International Organization for Standardization
Provided by IHS under license with ISO
No reproduction or networking permitted without license from IHS
Not for Resale

6.2 Planning considerations

When feasible, all building work areas should be pre-wired with horizontal cabling, for later connection to DTEs. Since all work areas should be pre-wired whether or not there is an immediate need for DTEs in each, the total number of work areas is a measure of the potential number of DTEs and the cabling to be installed. The location of cabling and distributor should be chosen to minimise potential disruption cased by normal building renovation.

6.3 Cabling structure

The cabling plan should include both trunk and lobe cabling.

6.3.1 Trunk cabling

The two principle configurations for the trunk cabling are multi-layered physical star, and physical ring wiring. The wiring may employ either of these techniques or a combination of them to allow the greatest flexibility in providing for physical redundancy, connectivity, cable management, and network management. Trunk cabling typically includes the connection of building distributors to campus distributors and to each other, and the connection of horizontal distributors to building distributors and to each other.

Guidelines for trunk cabling:

A minimum of two trunk cables should be connected to each telecommunications closet with additional cabling based on projected needs.

In addition to the STP cables, multimode optical fibre cables are recommended in the trunk to support future growth.

The optical fibre cables should be the primary choice for interconnecting closets where the cabling distances exceed the recommendations presented for STP. Other applications of Optical Fibre include requirements for electrical isolation between telecommunications closets, high electro-magnetic noise, and data security.

6.3.2 Lobe cabling

Lobe cabling includes all cabling from the MIC in the workspace to the attachment at the distributor. The use of optical fibre and UTP for lobe cabling is under study. The use of UTP lobe cabling for 4 Mbit/s operation is discussed in clause 11. All cabling should be installed as physical stars from telecommunications closet to work area outlet. This highly functional wiring configuration allows for the creation of single or multiple rings to service the buildings users, based on their specific requirements.

6.3.3 Cable length

The maximum recommended length for cabling between telecommunications closets is 200 m. The maximum recommended length for cabling from the TCU or concentrator in the telecommunications closet to the MIC is 100 m.

6.3.4 Cable length for optical fibre cables

The maximum recommended length for multimode optical fibre cabling between telecommunications closets is 2.000 m.

6.4 Positioning cabling components

The first step in positioning concentrators is to review the area that the network will cover and decide whether the concentrators will be centralized or decentralized. Each option has advantages and disadvantages, but the centralized arrangement is the preferred alternative. The following two sections help in comparing a centralized concentrator arrangement to a decentralized concentrator arrangement.

6.4.1 Centralised arrangement

A centralised configuration is generally the most desirable from the standpoint of network installation, maintenance and growth. In addition, centralized configurations often require fewer repeaters because of the reduced trunk wiring. Therefore, this is the configuration which should be considered first. In the centralized

Copyright International Organization for Standardization
Provided by IHS under license with ISO
No reproduction or networking permitted without license from IHS
Not for Resale

configuration shown in figure 9, the concentrators are clustered into one or more telecommunications closets that are central to the stations they service. This configuration minimises the length of the trunk path, compared to the alternative of spreading the concentrators out across the network. Since the requirement for repeaters or converters in a token ring network is based on the total length of the trunk path plus the longest lobe length, a centralised configuration minimises the need for repeaters or converters.

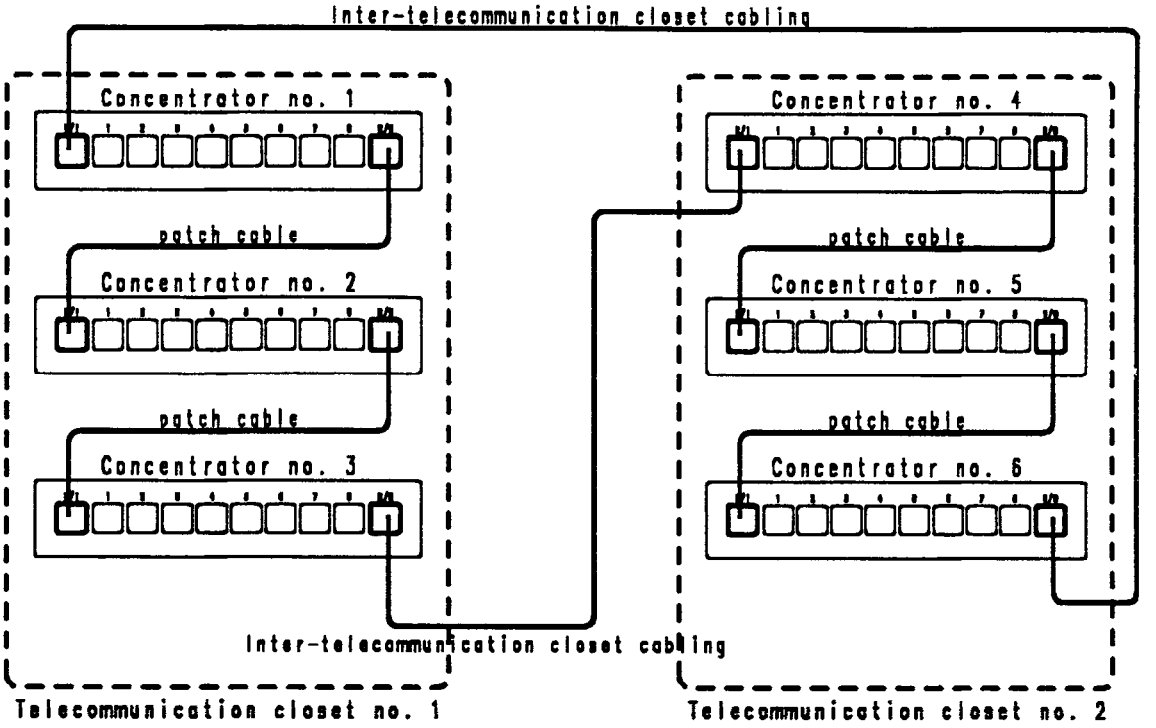

Figure 9 - Centralized concentrator arrangement

A centralized arrangement of one or more telecommunications closets is a common cabling configuration which provides the advantages associated with centralized network management while maintaining lobe lengths within maximum recommended lengths. This configuration is recommended for all large office areas which are to be pre-wired for LAN applications. A centralized arrangement makes it easier to install the main ring path. Because the concentrators are in centralized groups, interconnection is achieved using patch cables. The only long cable runs that have to be installed in the trunk path are the runs between the groups of concentrators. Troubleshooting the cable system is also made easier with a centralized arrangement. A whole group of concentrators and their cables can be tested while remaining in one location.

6.4.2 Decentralised arrangement

There are some configurations for which decentralized arrangement of concentrators is preferable. For example, if the attaching devices are widely scattered throughout the establishment, there may be no appropriate choice of telecommunications closet locations which maintain maximum lobe lengths of 100 m. In some situations, a significant savings in wiring which can be achieved by locating each concentrator near the small group of stations it services, outweighs the advantages of centralised network management.

Sites might not have any available areas where there is enough space for several concentrators. Instead of requiring that one or more large areas be set aside for concentrators, a decentralised arrangement allows the space requirement for concentrator placement to be spread throughout the establishment. Therefore, when space is limited, a decentralised arrangement may be appropriate.

Figure 10, depicts a decentralised configuration.

Copyright International Organization for Standardization
Provided by IHS under license with ISO
No reproduction or networking permitted without license from IHS
Not for Resale

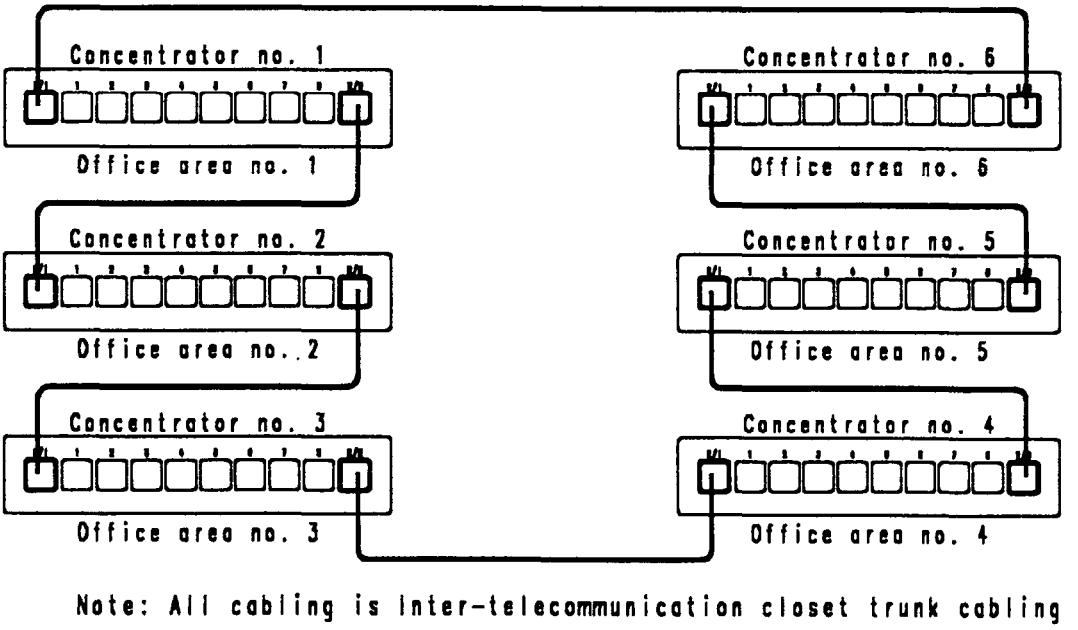

Figure 10 - Decentralised Concentrator Arrangement

6.4.3 Placement of concentrators

Once it is decided which concentrator arrangement would work best, their placement of concentrators should be determined.

If a centralized arrangement is used, open areas that have enough available space for several concentrators are required. These open areas chosen for a centralised concentrator group should be close to the stations assigned to that group, and should be chosen to ensure that maximum lobe lengths will not exceed 100 m. If a decentralized arrangement is used, each concentrator should be placed close to the group of stations it supports.

6.5 Lobe and Trunk Cable Connections

The ISO/IEC 8802-5 specifies the pin designations for transmit and receive signal at the MIC. The corresponding details for the trunk cabling and for the connection from the trunk to the lobes is not provided and cannot be inferred from Figure 7-2 in the standard (Example of station connection to the medium) since a crossover must exist at ring-in or ring-out. This subclause explicitly states the pin connections consistent with all known implementations of ISO/IEC 8802-5. For all copper trunk cabling the "Main-ring-path" twisted-pair is connected to pins R and G, while the "Back-up-path" twisted pair is connected to pins O and B. These connection assignments are maintained at all "ring-in" and "ring-out" ports of all devices which connect to the trunk cable. Therefore, the transmission path of the signal in figure 11, is from the R and G pins on the trunk, into the TCU or concentrator via the "Ring-in" port, onto the R and G pins on the lobe, through the DTE, to the O and B pins on the lobe, back to the TCU or concentrator and out the R and G pins of the "Ring-out" port. Cables meeting the requirements of this document are typically manufactured with one red/green pair and one orange/black pair. Common wiring practice is to terminate the red wire at pin R, the green wire at pin G, the orange wire at pin O and the black wire at pin B.

Copyright International Organization for Standardization
Provided by IHS under license with ISO
No reproduction or networking permitted without license from IHS
Not for Resale

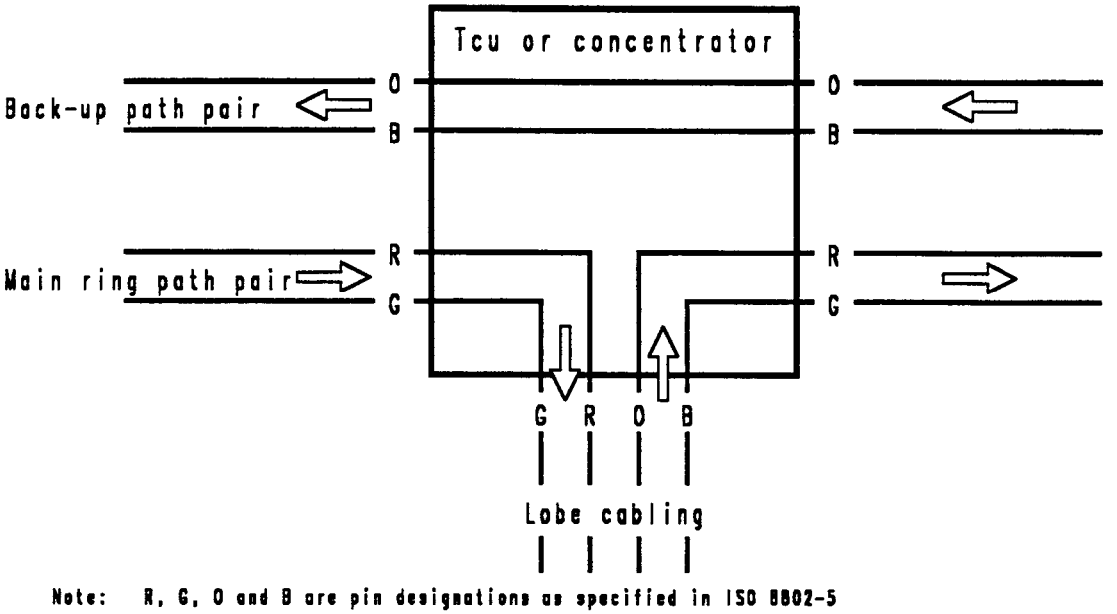

Figure 11 - Transmission path continuity at the TCU.

7 Guidelines for determining allowable network configurations

Token rings can be divided into two types, those which do and those which do not require repeaters/converters. The configuration requirement for each type is that signals generated at any station must be able to reach the MIC of a receiver station with adequate signal strength as defined in ISO/IEC 8802-5. This signal level must be attainable over the temperature range of application of the cables, using the lowest transmit voltage defined by ISO 8802-5. Where ring reconfiguration is required to accommodate restoration procedures, the receiver signal levels must still be adequate for proper operation.

A consequence of these requirements is that the longest possible transmission path must be determined, and the signal loss of that path must be computed assuming the cabling is at the maximum expected temperature for its particular installation. For single telecommunications closet configurations without repeaters, problem determination and restoration procedures normally replace suspected broken patch cables, and bypass suspected broken TCUs. Therefore, the longest transmission path will consist of the station with the longest lobe transmitting to itself and the shortest trunk cable broken. For multi-telecommunications closet rings without repeaters, the longest path is normally based on a restoration procedure where a suspected or known broken cable segment has been removed. The station with the longest lobe must still provide the drive back to itself as shown in figure 13.

When a ring has repeaters or converters as shown in figure 6, analysis of ring transmission is broken down into separate parts, one for each ring segment. The segments are bounded by repeaters or converters. Figure 1 on page 27 below illustrates an example with each segment numbered.

[1] R, G, O, and B are pin designations as specified in ISO 8802-5.

Copyright International Organization for Standardization
Provided by IHS under license with ISO
No reproduction or networking permitted without license from IHS
Not for Resale

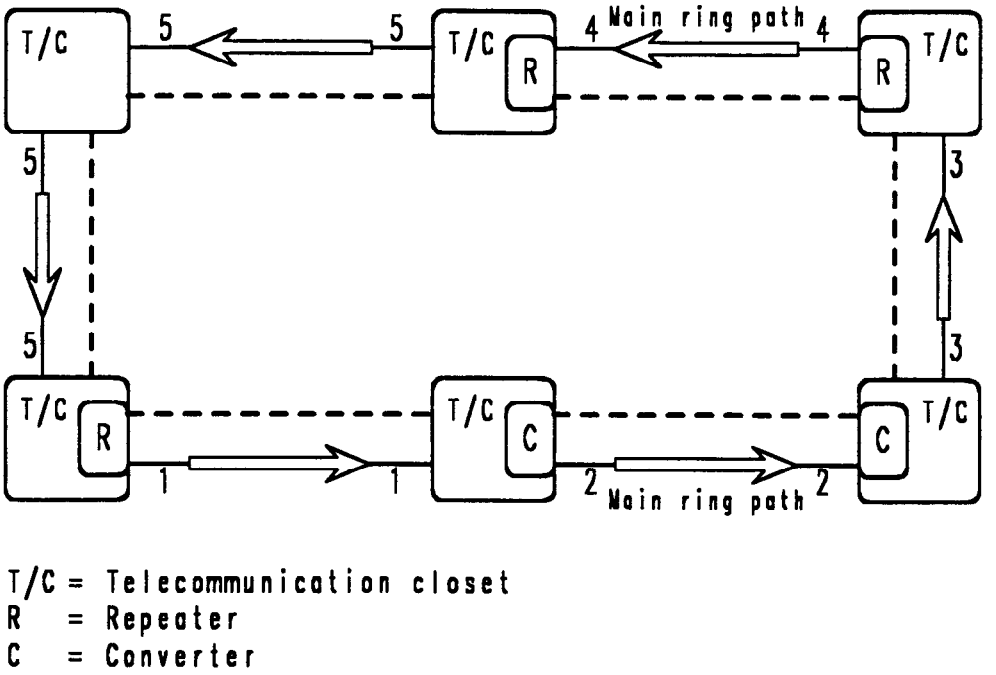

Figure 12 - Multi-Telecommunications closet configuration.

The ring in figure 12 is seen to have five separate segments.

1) **Segment 1 is bounded by a repeater at its input and a converter to an alternate medium at its output.**

2) **Segment 2 is the transmission over the alternate medium.**

3) **Segment 3 is bounded by a converter at its input and a repeater at its output.**

4) **Segments 4 and 5 are both bounded by repeaters.**

Of these five segments, the second is unique. The requirements on segment 2 are that the input signal must be reproduced at the output with a waveform as defined in ISO/IEC 8802-5. The accumulated jitter must be within the limits specified for the converter by its manufacturer, in terms of the number of stations per ISO/IEC 8802-5. The delay for the segment must be specified. For the other four segments, received signal levels at any station shall always be at or greater than the minimum receive signal level as set forth in ISO/IEC 8802-5.

Copyright International Organization for Standardization
Provided by IHS under license with ISO
No reproduction or networking permitted without license from IHS
Not for Resale

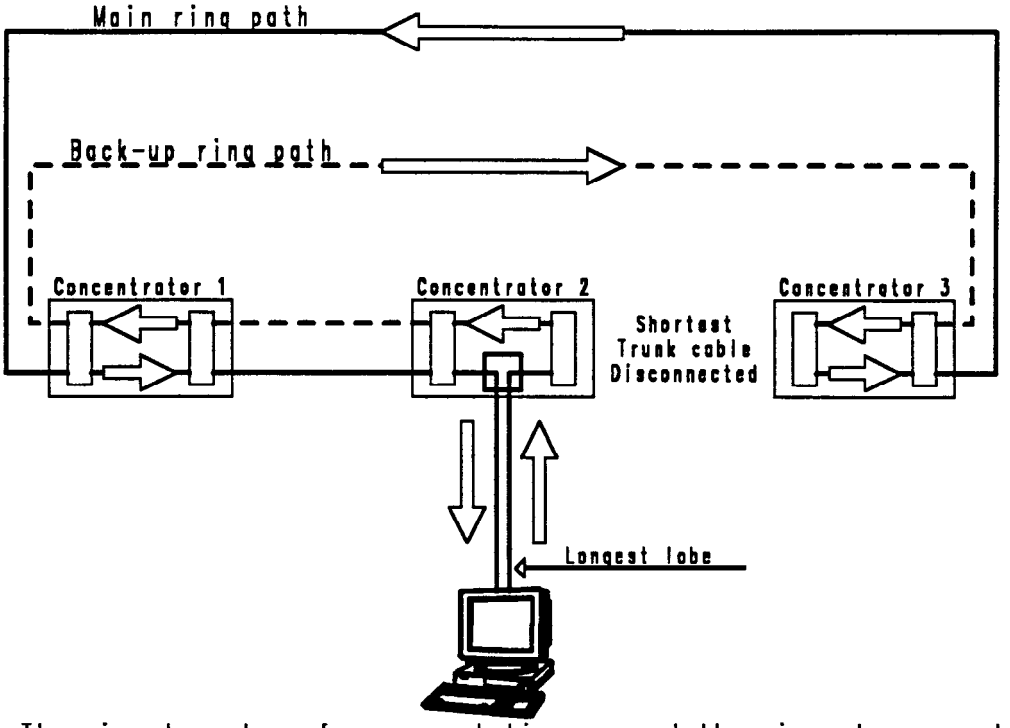

Note - The signal must go from any station, around the ring, to concentrator where the output wire has been disconnected. The back-up path is activated by The signal travels along the back-up path to the input of a medium unit, then the main ring path.

Figure 13 - Restored ring for worst case.

The usual assumption for system restoration, manual or automatic, is that the repeaters or converters may or may not be operational. If they are not, signals from the station with the longest lobe in each of the segments must be able to go to the input of the repeater at the segment output, wrap to the repeater at the segment input, and return back to the sending station. A second requirement is that either of the repeaters/converters at the segments input and output must be able to send a signal back to itself with the other repeater/converter wrapped and no stations in the segment active. Within this scenario is the assumption that the repeater/converter at the output of the segment has the capability to drive the back-up portion of the trunk cable under the conditions where the ring is in a wrapped state.

7.1 Attenuation limits

For 4 and 16 Mbit/s data rates, the total allowable loss in the channel between any transmitting station's MIC and the receiving station's MIC, shall be less than or equal to 19 dB. With the loss components characterised as root f attenuation and flat loss (ie. frequency independent loss), no more than 5 dB shall be attributable to flat loss *).

To use the above guidelines, add all line losses associated with the sections of permanently installed cable, and all patch cables in the transmission path between any two stations. In computing these losses, characterise all components at worst case (maximum) temperatures. If the worst case temperatures are not known, then 60 ^{o} C may be used.

*) The maximum attenuation specified for a test channel within the ISO/IEC 8802-5 is 21 dB. The difference between these values provides the margin needed for cascading token ring stations to form a ring.

Copyright International Organization for Standardization
Provided by IHS under license with ISO
No reproduction or networking permitted without license from IHS
Not for Resale

8 Guidelines for documentation

8.1 General Guidelines

This clause provides guidelines for cable administration within a campus. Where national guidelines exist which are incompatible with the recommendations presented here, the national guidelines shall supersede these.

1) The cabling plant should have a numbering and labelling scheme that does not change over time and is independent of the devices that attach to it. This is essential for administering cable plant and networks since the attaching systems which will change several times in the life of the installation.

2) Cables should be labelled at each end to indicate both source and destination termination points. Termination points generally will be faceplates, distribution panels, and punchdown blocks.

3) A unique cable number, independent of source and destination information, should be assigned to each cable and recorded on each cable label.

4) Multipair cables that are terminated at several termination points should use the individual termination locations (for example, a distribution panel coordinate) to indicate the path between two termination points. The common cable number (see 3 above) will serve to indicate that the pairs are within the same cable.

5) At a minimum, appropriate labels should be applied:

- at each end of a cable run and at each termination point.

6) The following records should be maintained:

- A cable schedule for each telecommunications closet indicating the cable number, its source and destination, its type, and its current use. This schedule should be arranged both by cable number and by destination.
- A master cable schedule meeting the same requirements as listed above.
- A complete set of "as-built" cabling plans.
- A running list of work orders detailing moves and changes.

8.2 Example

As an example of a specific implementation, figur 14, figure 15 and figure 16, can be used. Note that the number of characters used in each of the fields needs to be sufficiently large to handle all projected expansion of the cabling system for the establishment.

Copyright International Organization for Standardization
Provided by IHS under license with ISO
No reproduction or networking permitted without license from IHS
Not for Resale

Label Lay-out 1/3

Label from building distributor to horizontal distributor

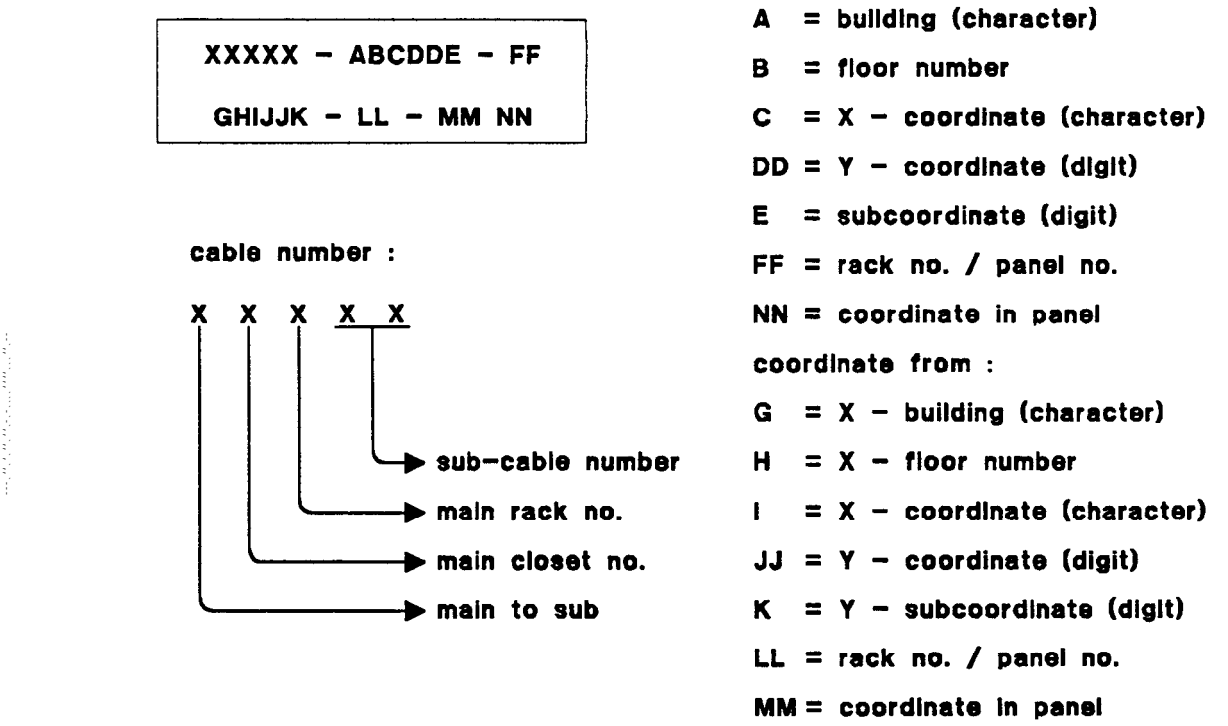

Figure 14 - Building labels.

Copyright International Organization for Standardization
Provided by IHS under license with ISO
No reproduction or networking permitted without license from IHS
Not for Resale

Label Lay-out 2/3

Label from horizontal distributor to horizontal distributor

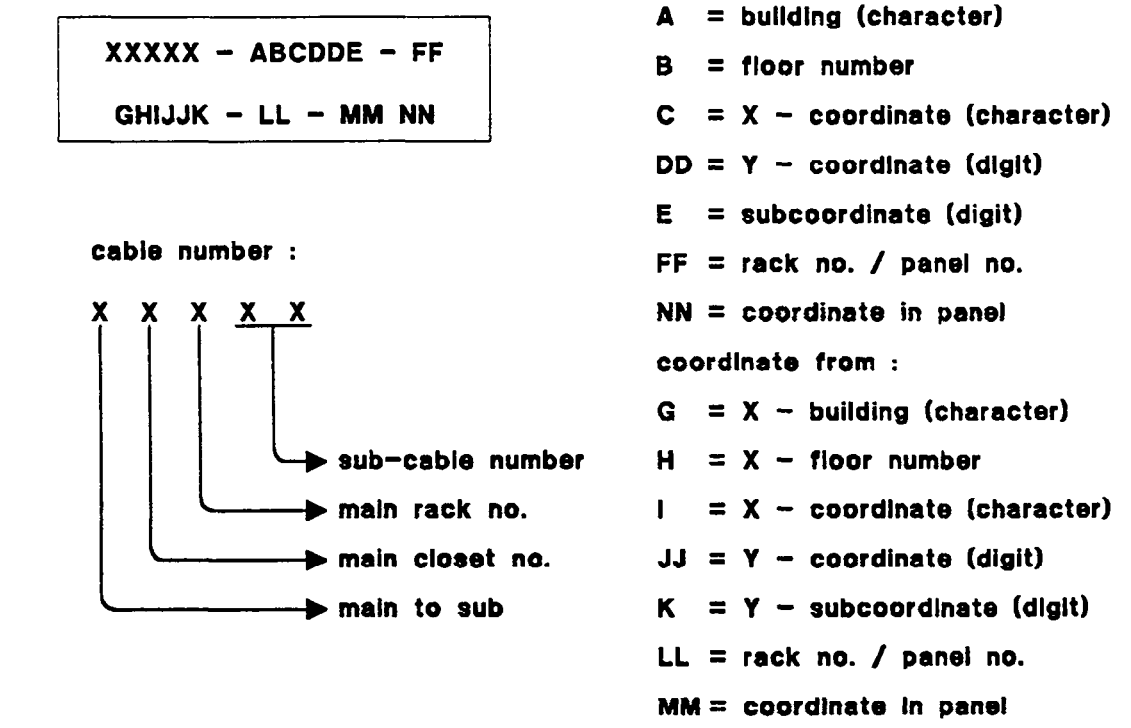

Figure 15 - Horizontal labels.

Copyright International Organization for Standardization
Provided by IHS under license with ISO
No reproduction or networking permitted without license from IHS
Not for Resale

Label Lay-out 3/3

Label from horizontal- /subdistributor to outlet

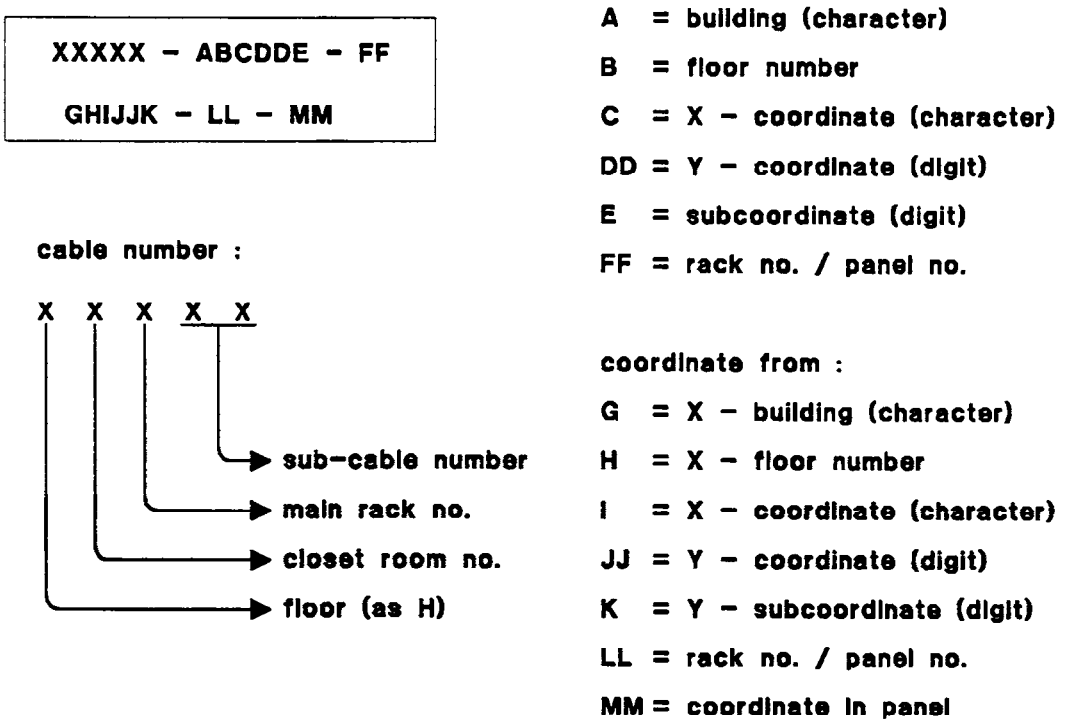

Figure 16 - Work area outlet labels.

9 Relevant safety standards

The following is an informative bibliography of standards containing provisions which should be observed. At the time of publication, the editions, where indicated, were valid. Where these referenced standards have been superseded, the latest editions should be used.

IEC 74 and IEC 153	**Particular safety requirements for equipment to be connected to telecommunication networks**
IEC 364	**Electrical installations of buildings**
IEC 479	**Effects of current passing through the human body**
IEC 529: 1989	**Classification of degrees of protection provided by enclosure (IP Code)**
IEC 536: 1976,	**Classification of electrical and electronic equipment with regard to protection against electric shock.**
IEC 664-1:	**Insulation coordination for equipment within low voltage systems - Part 1: Principles, requirements and tests**

Copyright International Organization for Standardization
Provided by IHS under license with ISO
No reproduction or networking permitted without license from IHS
Not for Resale

IEC 950: 1991.	Safety of information technology equipment including electrically operated business machines.
IEC Guide 105: 1985,	Principles concerning the safety of equipment electrically connected to a telecommunication network.
CCITT Recommendation K.11: 1988,	Principles of protection against overvoltages and overcurrents.
CCITT Recommendation K.17: 1988,	Tests on power-fed repeaters using solid-state devices in order to check the arrangements for protection from external interference.
CCITT Recommendation K.21: 1988,	Resistibility of subscribers' terminals to overvoltages and overcurrents.

10 Installation considerations

10.1 Purpose

This clause provides guidelines for installation of the physical cabling in typical office environments. Operating environments (temperature, EMC) are for further study.

10.2 Recommended separation distances to power lines

The recommended separation in table 4 is based on performance considerations.

NOTE, - If local safety rules are more restrictive they should be followed.

10.2.1 Recommended separation for STP cables

In general, to prevent adverse effects of noise coupling from power lines to the shielded cables, the following minimum separations should be maintained.

Minimum distance between shielded cables and telecommunication power lines	< 2 kVA	2-5 kVA	> 5 kVA
Power lines or electrical equipment with no ground plane separation from shie lded cable	*0 mm*	*130 mm*	*600 mm*
Unshielded power lines or electrical cables enclosed in a grounded metallic c onduit.	*0 mm*	*65 mm*	*300 mm*
Power lines enclosed in grounded metallic conduit (e.g. lead or aluminium she athed power lines) with cables enclosed in a separate grounded metallic conduit.	*0 mm*	*40 mm*	*150 mm*

Table 4 - Minimum cable separation from sources of interference.

10.2.2 Recommended cable separation for optical fibre cables

Since optical fibre is insensitive to electrical fields, installation constraints will be based on physical handling considerations.

Copyright International Organization for Standardization
Provided by IHS under license with ISO
No reproduction or networking permitted without license from IHS
Not for Resale

10.3 Telecommunications Closet Considerations

This report assumes concentration points for the cables at horizontal distributors, or telecommunications closets. In actual practice, the concentration points can be in dedicated areas such as described above, or in areas within the normal office environment. For either case, the cable terminations are often terminated in racks for ease of network management. This organizational practice is highly recommended for large installations, but is not required, and may not be desirable in all office environments. Since racks are normally used for terminating and organizing the cable, and since the racks are normally placed in telecommunications closets, the following description will assume that all wiring is terminated in racks placed in telecommunications closets.

10.3.1 Telecommunications closet location

In multi-story buildings, the telecommunications closets should be situated close to vertical access. The number of telecommunications closets per floor and their placement should be such that maximum lobe distance is not exceeded.

10.3.2 Cable installation in ducts

In all ducts the cable separation requirements must be maintained.

10.4 Guidelines for cabling between telecommunications closets

10.4.1 Guidelines for balanced cabling between telecommunications closets

For estimating the number of pairs between telecommunications closet STP cables required to terminate in a telecommunications closet, count the number of workspace to telecommunications closet cables terminating in the closet. The total number of pairs in inter-telecommunications closet cables terminating there should be a minimum of four, to support 16 lobe cables, with additional pair based on projected needs.

10.4.2 Guidelines for optical fibre cabling between telecommunications closets

In addition to the vertical copper cables, optical fibre cables should be installed to support extended drive distances, and where ground potential differences and electromagnetic interference (EMI) may be of concern. A general guideline which provides for 50 % of the inter telecommunications closet copper capability to be migrated to optical fibre is to provide optical fibre cabling which contains one fibre per inter-closet copper cable installed. Installation of a minimum of two fibre pairs is recommended.

10.5 Bonding the equipment to ground

Warning: The recommendations in this section are based on performance considerations only. There are significant safety concerns associated with bonding cable shields to ground which must be adhered to.

Bonding must be in accordance with applicable electrical codes.

All shields of the cables should be bonded at each telecommunications closet. Normally, the shields are bonded to the equipment racks, which are, in turn, bonded to building ground. This bonding ensures that voltages that are induced into wiring (by lifts or other disturbances) are directed to building ground and so do not cause interference of the transmitted token ring signals.

- Bond each equipment rack to the same grounding electrode used by the power service for the building.
- The path to ground must be permanent and continuous.

Copyright International Organization for Standardization
Provided by IHS under license with ISO
No reproduction or networking permitted without license from IHS
Not for Resale

- The cable shields provide a continuous ground path to all parts of a cabling system that are interconnected by it.

  All grounding electrodes of different systems in the building must be bonded together to reduce effects of differences in ground potential. After installation, the building grounding system should meet the ground potential difference limits of one volt r.m.s. between any two grounds on the network.

  If this requirement cannot be met, then fibre optic trunk cable should be used to provide electrical isolation between the different building grounds.

- Bond metallic conduit used to enclose a grounding conductor to the grounding conductor at both ends to reduce impedance.

- Each equipment rack should be individually connected to ground. This assures the continuity of the ground path from each rack.

11 Use of unshielded twisted pair as an alternative transmission medium for lobes for 4 Mbit/s token ring operation

11.1 Scope

This clause provides cabling guidelines when using unshielded twisted pair (UTP) [1]) cables for attaching ISO/IEC 8802-5 stations to a token ring network operating at 4 Mbit/s [2]) based on the UTP supplement to ISO/IEC 8802-5. With necessary modifications to the attaching products, and with proper control of noise sources, as recommended here, there are many applications where UTP can be successfully used. Not addressed are modifications to the token ring transmitter and receiver which may be necessary to permit the attaching equipment to use the UTP without violating national electromagnetic radiation limits. When UTP class 3 is used in the channel, the resulting token ring operation will be limited. The limitations include a supported limit of 72 stations instead of 250. In addition, the error rate performance is highly dependent upon noise sources which may interfere with ring operation. Guidance is provided to help minimise ring error rate.

11.2 Overview

Token ring operation using UTP medium, will provide satisfactory operation in many applications when used according to these recommendations. However, this operation is not presently part of ISO/IEC 8802-5.

11.3 Unshielded twisted pair cabling characteristics

This subclause specifies the transmission parameters for the UTP. Two transmission parameters that affect token-ring performance are attenuation and crosstalk. Since a significant number of UTP token-ring network applications will use existing in-place cable, these recommended transmission parameters have taken into account the characteristics of such cables to ensure that they may be utilised. The following specifications can generally be met by 0,5-0,65 mm (or 24 to 22 AWG) UTP [3]).

11.3.1 Cable construction

The cable shall be of twisted pair or star quad construction.

11.3.2 Attenuation

The following attenuation characteristics are recommended maximum limits and permit cables with other characteristics to be used so long as the maximum cabling attenuation does not exceed 13 dB at 4 MHz for any transmission path from transmitter MIC to receiver MIC. The 13 dB limit is consistent with the

1) With the introduction of data grade UTP, i.e. categories 4 and 5, better performance capabilities are expected.

2) A standard to support 4 and 16 Mbit/s ISO 8802-5 token rings over unshielded twisted pair is under development by IEEE 802.5 and when completed will be incorporated into this guide.

3) Deviating diameters can be used but may require special terminating hardware.

Copyright International Organization for Standardization
Provided by IHS under license with ISO
No reproduction or networking permitted without license from IHS
Not for Resale

crosstalk attenuation specification listed in chapter 11.3.3. For cable exhibiting better crosstalk characteristics higher attenuation may be achievable. This increased attenuation may be translated into longer lobe lengths and/or higher cable attenuation than listed in table 5.

Frequency MHz	Maximum attenuation dB/km at 25 ° C
1	*26*
4	*55*
10	*98*

Table 5 - Maximum recommended cable attenuation

11.3.3 Near end crosstalk (NEXT) attenuation

The recommended minimum near-end crosstalk attenuation between the two pairs is shown in figure 17. Figure 17 must be fulfilled for any lobe cabling.

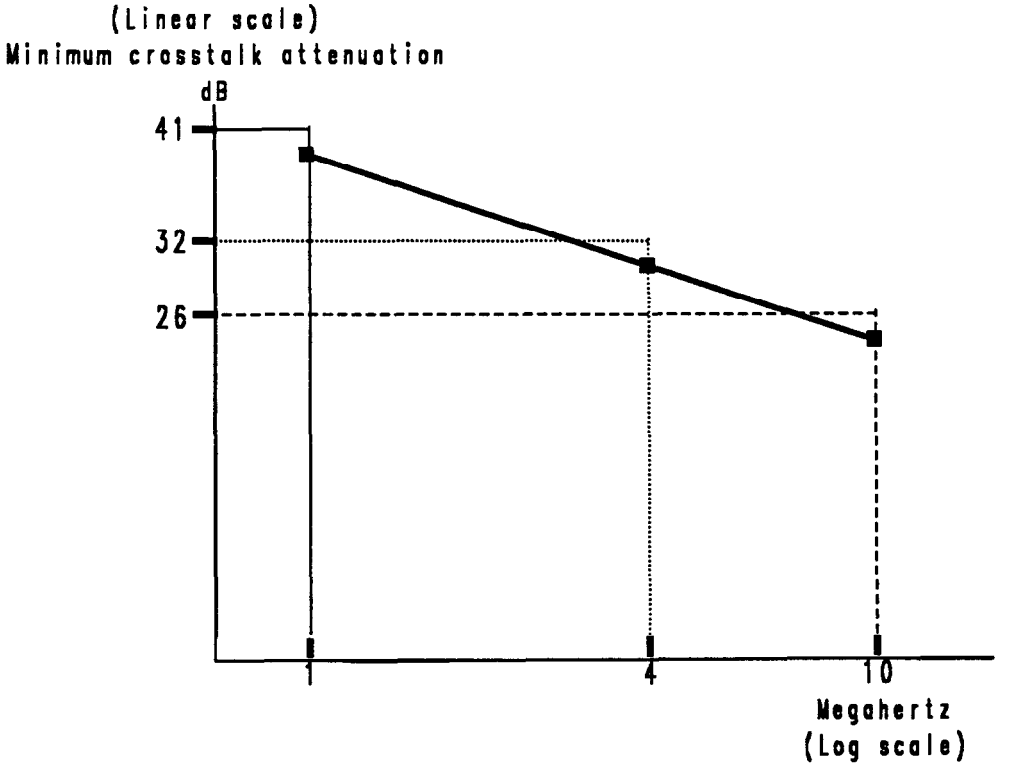

Figure 17 - Near end crosstalk attenuation.

11.3.4 Characteristic impedance

The characteristic impedance independent of structured return loss effects from 1 MHz to 10 MHz should be 100 Ω ± 15 Ω*).

Copyright International Organization for Standardization
Provided by IHS under license with ISO
No reproduction or networking permitted without license from IHS
Not for Resale

11.4 Medium Interface Connection

The 8-pin connector defined by IEC 603-7 is recommended for medium interface connection in all new installations. However, the 6-pin connector is also acceptable for installations already terminated with it. Note that for newly terminated outlets, even in existing installations, the 8-pin connector should be used. The correct cabling from the DTE transmit and receive ports, through the modular connector and to the Data Connector pins R, G, O and B, are shown in table 6.

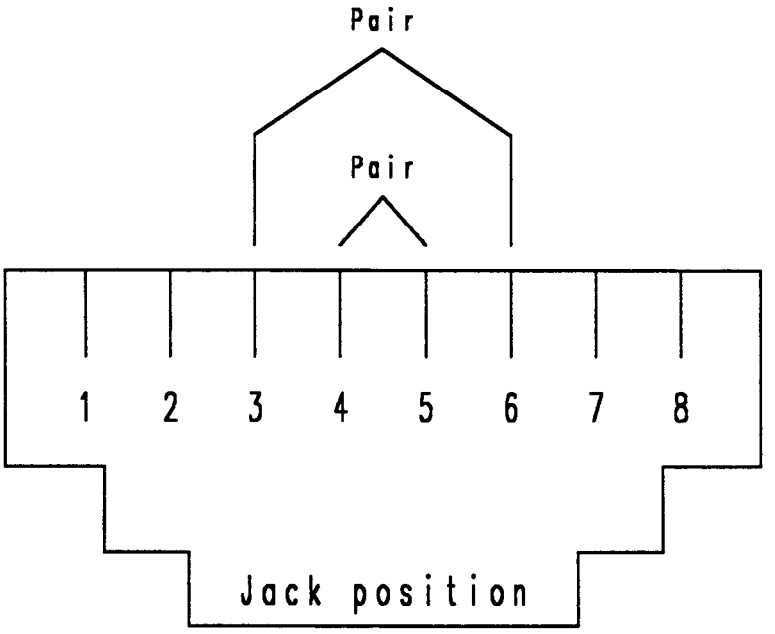

Figure 18 - Pin assignment for IEC 603-7 connector, front view.

Line name [1])	ISO/IEC 8802-5 designation	6-Pin modular jack pin number [2])	8-Pin modular jack pin number
Transmit	*B*	*2*	*3*
Receive	*R*	*3*	*4*
Receive	*G*	*4*	*5*
Transmit	*O*	*5*	*6*

1) Transmit and receive pair are defined with respect to the DTE.
2) For old installations only.

Table 6 - Attachment to the modular data connector.

*) IEEE 802.5 has also addressed the question of establishing a separate impedance range of 120 ± 15 Ω for 16 Mbit/s token ring operation. As a result of this work, IEEE 802.5 concludes that it may be feasible to operate ISO/IEC 8802-5 conformant stations which meet the requirement for operation over 100 Ω cable to operate on a homogeneous 120 ± 15 ohm cabling system with 120 Ω patch cords. Such attachment is already supported by some token ring manufacturers.

Copyright International Organization for Standardization
Provided by IHS under license with ISO
No reproduction or networking permitted without license from IHS
Not for Resale

11.5 Cable Routing

Telephone interconnection practices have a significant effect on the capability of a UTP wiring system to accommodate token-ring signals. For satisfactory transmission, in addition to conforming with the specifications in the previous sections, the following conditions should be met:

1) The cable should be free of splices and unterminated or parallel segments (stubs and/or bridged taps).

2) The cabling run from the TCU to the wall outlet should pass through no more than two connecting blocks (sometimes referred to as "punch down blocks").

3) When cables that are routed through metallic ducts, the ducts should be properly grounded.

4) Cables should be routed away from all sources of interference. These include power lines, motors, radio interference, fluorescent lights and heavy machinery.

5) Any copper cabling between TCUs should be shielded cable properly grounded at both ends.

6) Token-ring signals should not be routed through cables that exit a building or which are adjacent to cables either exiting a building or exposed to direct lightning strikes and power surges.

7) UTP cables that contain token-ring signals should not be simultaneously used for applications which may impress high voltages (greater than 5 V) with sharp rise or fall times, since the noise coupling from such signals could directly cause errors on the token ring network.

8) For single telecommunications closet rings, lobe lengths should not exceed 100 M of 0,65 mm to 0,5 mm diameter (or 22 to 24 AWG) wire.

Where possible it is recommended that a dedicated UTP cable be used for token-ring signals. If this practice is followed, the crosstalk noise due to other signals in the cable is minimised and a lower error rate is realisable.

11.6 Bit error rate

The error rate of the token-ring is a function of both the environmental electrical noises and the noise generated by signals on the pairs in the same cable sheath as the lobe pairs carrying the token-ring signals. This noise includes the self-crosstalk noise from the node transmit signal. The error rate of the UTP lobe system is not guaranteed in the presence of the noise generated outside the token ring. When environmental electrical noise is encountered, it may cause excessive errors. UTP should not be used for inter-connecting TCUs in separate telecommunications closets.

Although the ring error rate of 10^{-8} cannot be guaranteed, with careful planning an acceptable bit error rate can be achieved in most office environments.

11.7 Safety

11.7.1 Installation and maintenance guidelines

During installation and maintenance of the UTP cable plant, care should be taken to ensure that the conductors are so fixed or segregated that they cannot make electrical contact with other type of conductors or ground.

11.8 Outlet administration Outlets used for token ring application should be appropriately labeled.

11.9 Future work.

Use of UTP as a transmission medium for 16 Mbit/s token ring within the body of the ISO 8802-5 standard is presently under work.

Copyright International Organization for Standardization
Provided by IHS under license with ISO
No reproduction or networking permitted without license from IHS
Not for Resale

12 Testing of installed cabling

Under consideration

Copyright International Organization for Standardization
Provided by IHS under license with ISO
No reproduction or networking permitted without license from IHS
Not for Resale

ICS 35.200.00

Descriptors: Information technology, office equipment, interface and interconnection equipment

Price based on 39 pages

--`,,```,,,,````-`-`,,`,,`,`,,`---

Copyright International Organization for Standardization
Provided by IHS under license with ISO
No reproduction or networking permitted without license from IHS

Not for Resale