TECHNICAL REPORT

ISO/IEC TR 11802-5

ANSI/IEEE Std 802.1H

First edition
1997-08-15

Information technology — Telecommunications and information exchange between systems — Local and metropolitan area networks — Technical reports and guidelines —

Part 5:
Media Access Control (MAC) Bridging of Ethernet V2.0 in Local Area Networks

Technologies de l'information — Télécommunications et échange d'information entre systèmes — Réseaux locaux et métropolitains — Rapports techniques et lignes directrices —

Partie 5: Liant de contrôle d'accès aux supports (MAC) de V2.0 Ethernet dans les réseaux locaux

Reference number
ISO/IEC TR 11802-5:1997(E)
ANSI/IEEE
Std 802.1H, 1997 edition

Copyright International Organization for Standardization
Provided by IHS under license with ISO
No reproduction or networking permitted without license from IHS

Not for Resale

Abstract: Extensions to the behavior of ISO/IEC 10038 (IEEE 802.1D) media access control (MAC) Bridges, in order to facilitate interoperability in bridged local area networks (LANs) comprising CSMA/CD networks interconnected with other types of LAN using MAC Bridges, where the CSMA/CD networks contain a mixture of ISO/IEC 8802-3 and Ethernet V2.0 end stations, are specified. Additionally, guidelines are provided for the development of nonstandard 802 protocols, with particular emphasis on conversion of existing Ethernet protocols and the behavior to be expected from a Bridge, for the purpose of avoiding future incompatibilities.
Keywords: carrier sense multiple access with collision detection (CSMA/CD), data processing, Ethernet, fibre distributed data interface (FDDI), information interchange, LAN protocols, local area network (LAN), media access control (MAC) bridges, network interconnection, selective translation, selective translation table

---

The Institute of Electrical and Electronics Engineers, Inc.
345 East 47th Street, New York, NY 10017-2394, USA

Copyright © 1997 by the Institute of Electrical and Electronics Engineers, Inc.
All rights reserved. Published 1997. This printing is by the International Organization for Standardization with special permission of the Institute of Electrical and Electronics Engineers, Inc. Printed in Geneva, Switzerland.

ISBN 1-55937-945-6

No part of this publication may be reproduced in any form, in an electronic retrieval system or otherwise, without the prior written permission of the publisher.

Copyright International Organization for Standardization
Provided by IHS under license with ISO
No reproduction or networking permitted without license from IHS
Not for Resale

ISO/IEC Technical Report 11802-5: 1997(E)
ANSI/IEEE Std 802.1H, 1997 Edition

Information technology—
Telecommunications and information exchange between systems—
Local and metropolitan area networks—
Technical reports and guidelines—

Part 5: Media Access Control (MAC) Bridging of Ethernet V2.0 in Local Area Networks

Sponsor

LAN MAN Standards Committee
of the
IEEE Computer Society



Adopted as an International Standard by the International Organization for Standardization and by the International Electrotechnical Commission



Published by
The Institute of Electrical and Electronics Engineers, Inc.



Copyright International Organization for Standardization
Provided by IHS under license with ISO
No reproduction or networking permitted without license from IHS
Not for Resale

Foreword

ISO (the International Organization for Standardization) and IEC (the International Electrotechnical Commission) form the specialized system for worldwide standardization. National bodies that are members of ISO or IEC participate in the development of International Standards through technical committees established by the respective organization to deal with particular fields of technical activity. ISO and IEC technical committees collaborate in fields of mutal interest. Other international organizations, governmental and non-governmental, in liaison with ISO and IEC, also take part in the work.

In the field of information technology, ISO and IEC have established a joint technical committee, ISO/IEC JTC 1.

The main task of technical committees is to prepare International Standards, but in exceptional circumstances a technical committee may propose the publication of a Technical Report of one of the following types:

— type 1, when the required support cannot be obtained for the publication of an International Standard, despite repeated efforts;

— type 2, when the subject is still under technical development or where for any other reason there is the future but not immediate possibility of an agreement on an International Standard;

— type 3, when a technical committee has collected data of a different kind from that which is normally published as an International Standard ("state of the art", for example).

Technical Reports of types 1 and 2 are subject to review within three years of publication, to decide whether they can be transformed into International Standards. Technical Reports of type 3 do not necessarily have to be reviewed until the data they provide are considered to be no longer valid or useful.

ISO/IEC TR 11802-5, which is a Technical Report of type 3, was prepared by Technical Committee ISO/IEC JTC 1, *Information technology,* Subcommittee SC 6, *Telecommunications and information exchange between systems.*



International Organization for Standardization/International Electrotechnical Commission
Case postale 56 • CH-1211 Genève 20 • Switzerland

Copyright International Organization for Standardization
Provided by IHS under license with ISO
No reproduction or networking permitted without license from IHS
Not for Resale

ISO/IEC 11802 consists of the following parts, under the general title *Information technology — Telecommunications and information exchange between systems — Local and metropolitan area networks — Technical reports and guidelines*:

— *Part 1: The structure and coding of Logical Link Control addresses in Local Area Networks* [Technical Report]

— *Part 2: Standard Group MAC Addresses* [Technical Report]

— *Part 4: Token ring access method and physical layer specifications — Fibre optic station attachment*

— *Part 5: Media Access Control (MAC) Bridging of Ethernet V2.0 in Local Area Networks*

For the purpose of assigning organizationally unique identifiers, the Institute of Electrical and Electronics Engineers, Inc., USA, has been designated by the ISO Council as the Registration Authority. Communications on this subject should be addressed to

Registration Authority for ISO/IEC 8802-3
c/o The Institute of Electrical and Electronics Engineers, Inc.
445 Hoes Lane, P.O. Box 1331
Piscataway, NJ 08855-1331
USA

Copyright International Organization for Standardization
Provided by IHS under license with ISO
No reproduction or networking permitted without license from IHS
Not for Resale

ISO/IEC Technical Report 11802-5: 1997

This Technical Report is part of a family of International Standards for Local and Metropolitan Area Networks. The relationship between this Technical Report, which provides extensions to the behavior of ISO/IEC 10038, and the other members of the family is shown below. (The numbers in the figure refer to ISO Standard numbers.)

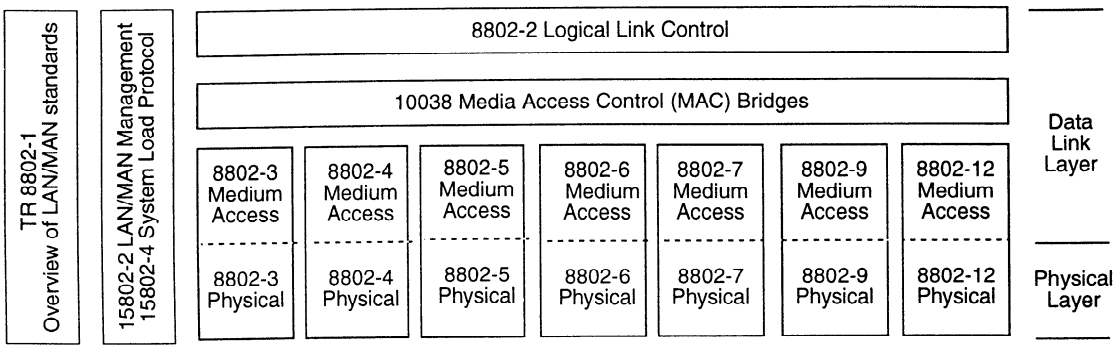

This family of International Standards deals with the Physical and Data Link layers as defined by the ISO/IEC Open Systems Interconnection Basic Reference Model (ISO/IEC 7498-1: 1994). The access standards define several types of medium access technologies and associated physical media, each appropriate for particular applications or system objectives. Other types are under investigation.

The International Standards defining the access technologies are as follows:

a) ISO/IEC 8802-3 [ANSI/IEEE Std 802.3], a bus utilizing CSMA/CD as the access method.
b) ISO/IEC 8802-4 [ANSI/IEEE Std 802.4], a bus utilizing token passing as the access method.
c) ISO/IEC 8802-5 [ANSI/IEEE Std 802.5], a ring utilizing token passing as the access method.
d) ISO/IEC 8802-6 [ANSI/IEEE Std 802.6], a dual bus utilizing distributed queuing as the access method.
e) ISO 8802-7, a ring utilizing slotted ring as the access method.
f) ISO/IEC 8802-9 [ANSI/IEEE Std 802.9], a unified access method offering global integrated services to the desktop by accessing a variety of networks.
g) ISO/IEC DIS 8802-12 [ANSI/IEEE Std 802.12], a bus utilizing Demand Priority as the access method.

ISO/IEC TR 8802-1 provides an overview of the LAN/MAN standards, along with details of their document numbering.

ISO/IEC 8802-2 [ANSI/IEEE Std 802.2], *Logical Link Control*, is used in conjunction with the medium access standards to provide the data link layer service to network layer protocols.

ISO/IEC 10038 [ANSI/IEEE Std 802.1D], *Media Access Control (MAC) bridges*, specifies an architecture and protocol for the interconnection of IEEE 802 LANs below the level of the logical link control protocol.

ISO/IEC 15802-2 [ANSI/IEEE Std 802.1B], *LAN/MAN Management*, defines an Open Systems Interconnection (OSI) management-compatible architecture, and services and protocol elements for use in a LAN/MAN environment for performing remote management.

ISO/IEC 15802-4 [ANSI/IEEE Std 802.1E], *System Load Protocol*, specifies a set of services and protocol for those aspects of management concerned with the loading of systems in ISO/IEC LAN/MAN environments.

The main body of the International Standard serves for both the ISO/IEC TR 11802-5: 1997 and ANSI/IEEE Std 802.1H, 1997 Edition, standards. ISO and IEEE each has a unique foreword.

Copyright International Organization for Standardization
Provided by IHS under license with ISO
No reproduction or networking permitted without license from IHS
Not for Resale

ANSI/IEEE Std 802.1H, 1997 Edition

IEEE Standards documents are developed within the Technical Committees of the IEEE Societies and the Standards Coordinating Committees of the IEEE Standards Board. Members of the committees serve voluntarily and without compensation. They are not necessarily members of the Institute. The standards developed within IEEE represent a consensus of the broad expertise on the subject within the Institute as well as those activities outside of IEEE that have expressed an interest in participating in the development of the standard.

Use of an IEEE Standard is wholly voluntary. The existence of an IEEE Standard does not imply that there are no other ways to produce, test, measure, purchase, market, or provide other goods and services related to the scope of the IEEE Standard. Furthermore, the viewpoint expressed at the time a standard is approved and issued is subject to change brought about through developments in the state of the art and comments received from users of the standard. Every IEEE Standard is subjected to review at least every five years for revision or reaffirmation. When a document is more than five years old and has not been reaffirmed, it is reasonable to conclude that its contents, although still of some value, do not wholly reflect the present state of the art. Users are cautioned to check to determine that they have the latest edition of any IEEE Standard.

Comments for revision of IEEE Standards are welcome from any interested party, regardless of membership affiliation with IEEE. Suggestions for changes in documents should be in the form of a proposed change of text, together with appropriate supporting comments.

Interpretations: Occasionally questions may arise regarding the meaning of portions of standards as they relate to specific applications. When the need for interpretations is brought to the attention of IEEE, the Institute will initiate action to prepare appropriate responses. Since IEEE Standards represent a consensus of all concerned interests, it is important to ensure that any interpretation has also received the concurrence of a balance of interests. For this reason IEEE and the members of its technical committees are not able to provide an instant response to interpretation requests except in those cases where the matter has previously received formal consideration.

Comments on standards and requests for interpretations should be addressed to:

Secretary, IEEE Standards Board
445 Hoes Lane
P.O. Box 1331
Piscataway, NJ 08855-1331
USA

Note: Attention is called to the possibility that implementation of this standard may require use of subject matter covered by patent rights. By publication of this standard, no position is taken with respect to the existence or validity of any patent rights in connection therewith. The IEEE shall not be responsible for identifying patents for which a license may be required by an IEEE standard or for conducting inquiries into the legal validity or scope of those patents that are brought to its attention.

Authorization to photocopy portions of any individual standard for internal or personal use is granted by the Institute of Electrical and Electronics Engineers, Inc., provided that the appropriate fee is paid to Copyright Clearance Center. To arrange for payment of licensing fee, please contact Copyright Clearance Center, Customer Service, 222 Rosewood Drive, Danvers, MA 01923 USA; (508) 750-8400. Permission to photocopy portions of any individual standard for educational classroom use can also be obtained through the Copyright Clearance Center.

Copyright International Organization for Standardization
Provided by IHS under license with ISO
No reproduction or networking permitted without license from IHS
Not for Resale

Foreword to ANSI/IEEE Std 802.1H, 1997 Edition

This standard is part of a family of standards for local and metropolitan area networks. The relationship between the standard and other members of the family is shown below. (The numbers in the figure refer to IEEE standard numbers.)

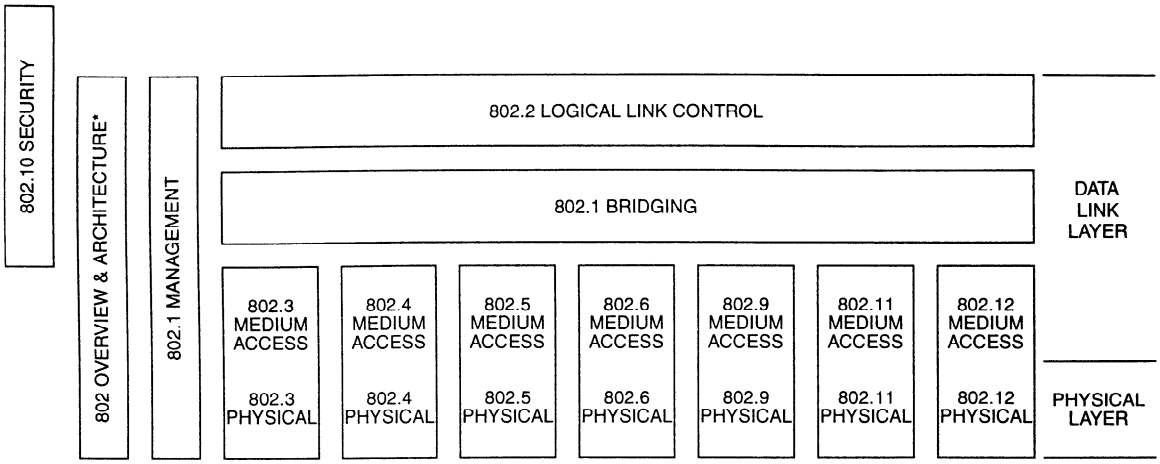

* Formerly IEEE Std 802.1A.

This family of standards deals with the Physical and Data Link layers as defined by the International Organization for Standardization/International Electrotechnical Commission (ISO/IEC) Open Systems Interconnection Basic Reference Model (ISO/IEC 7498-1: 1994). The access standards define several types of medium access technologies and associated physical media, each appropriate for particular applications or system objectives. Other types are under investigation.

The standards defining the access technologies are as follows:

- IEEE Std 802 — *Overview and Architecture.* This standard provides an overview to the family of IEEE 802 Standards. This document forms part of the 802.1 scope of work.
- ANSI/IEEE Std 802.1B and 802.1k [ISO/IEC 15802-2] — *LAN/MAN Management.* Defines an Open Systems Interconnection (OSI) management-compatible architecture, and services and protocol elements for use in a LAN/MAN environment for performing remote management.
- ANSI/IEEE Std 802.1D [ISO/IEC 10038] — *MAC Bridging.* Specifies an architecture and protocol for the interconnection of IEEE 802 LANs below the MAC service boundary.
- ANSI/IEEE Std 802.1E [ISO/IEC 15802-4] — *System Load Protocol.* Specifies a set of services and protocol for those aspects of management concerned with the loading of systems on IEEE 802 LANs.
- ANSI/IEEE Std 802.2 [ISO/IEC 8802-2] — *Logical Link Control*
- ANSI/IEEE Std 802.3 [ISO/IEC 8802-3] — *CSMA/CD Access Method and Physical Layer Specifications*
- ANSI/IEEE Std 802.4 [ISO/IEC 8802-4] — *Token Passing Bus Access Method and Physical Layer Specifications*

--`,,```,,,,````-`-`,,`,,`,`,,`---

Copyright International Organization for Standardization
Provided by IHS under license with ISO
No reproduction or networking permitted without license from IHS
Not for Resale

- ANSI/IEEE Std 802.5 [ISO/IEC 8802-5] — *Token Ring Access Method and Physical Layer Specifications*
- ANSI/IEEE Std 802.6 [ISO/IEC 8802-6] — *Distributed Queue Dual Bus Access Method and Physical Layer Specifications*
- ANSI/IEEE Std 802.9 [ISO/IEC 8802-9] — *Integrated Services (IS) LAN Interface at the Medium Access Control (MAC) and Physical (PHY) Layers*
- ANSI/IEEE Std 802.10 — *Interoperable LAN/MAN Security*
- ANSI/IEEE Std 802.11 — *Wireless LAN Medium Access Control (MAC) and Physical Layer (PHY) Specifications*
- ANSI/IEEE Std 802.12 — *Demand Priority Access Method, Physical Layer and Repeater Specifications*

In addition to the family of standards, the following is a recommended practice for a common Physical Layer technology:

- IEEE Std 802.7 — *IEEE Recommended Practice for Broadband Local Area Networks*

The following additional working group has authorized standards projects under development:

- IEEE 802.14 — *Standard Protocol for Cable-TV Based Broadband Communication Network*

The reader of this standard is urged to become familiar with the complete family of standards.

Conformance test methodology

An additional standards series, identified by the number 1802, has been established to identify the conformance test methodology documents for the 802 family of standards. Thus the conformance test documents for 802.3 are numbered 1802.3.

ANSI/IEEE Std 802.1H, 1997 Edition

This document specifies extensions to the behavior of ISO/IEC 10038 (IEEE Std 802.1D) MAC Bridges for use in dealing with Ethernet V2.0 frames.

ISO/IEC 8802-3 (IEEE 802.3) and Ethernet V2.0 frames often share the same LAN media, but the two kinds of frames do not have the same structure. Specifically, Ethernet V2.0 defines the two octets following the MAC addresses as a type, and ISO/IEC 8802-3 defines these same octets as a length. Footnote 7 in 3.2.6 of ISO/IEC 8802-3 : 1993 (footnote 6 in earlier editions) alludes to this difference and points out a way by which ISO/IEC 8802-3 and Ethernet V2.0 MAC frames may be distinguished.

The difference in frame structure means that Ethernet V2.0 frames cannot be directly forwarded by a Bridge to a different type of IEEE 802 LAN (e.g., token ring or FDDI), although they can be forwarded between pairs of LANs that both support Ethernet V2.0 (as, in practice, almost all ISO/IEC 8802-3 LANs do). The Internet Engineering Task Force (IETF) has specified, in RFC1042, a mechanism for conveying the Ethernet-based Internet Protocol (IP) and related protocols over IEEE 802 LANs. This uses the Subnetwork

Copyright International Organization for Standardization
Provided by IHS under license with ISO
No reproduction or networking permitted without license from IHS
Not for Resale

Access Protocol (SNAP) mechanism specified in IEEE Std 802, with the Ethernet-type values encapsulated in the protocol identifier values of SNAP PDUs. Subsequently, other (non-IP) uses of the RFC1042 mechanism have occurred that were incompatible with the IP protocol suite, and have caused interoperability problems for Bridges wanting to support both.

This recommended practice specifies extensions to the behavior of Bridges in order to facilitate restoration of the interoperability that was lost by such conflicting uses of the RFC1042 mechanism. It also provides guidelines to protocol designers so that they can migrate old Ethernet-based protocols, and design new IEEE 802-based protocols, in such a way that they will interoperate smoothly with Bridges.

Participants

The following is a list of participants in the Interworking effort of the IEEE Project 802.1 Working Group. Voting members at the time of Working Group approval are marked with an asterisk (*).

William P. Lidinsky,* *802.1 Working Group Chair*
Mick Seaman,* *Interworking Task Group Chair*

Floyd Backes*
Robert Barrett*
Amatzia Ben-Artzi
Anthony Berent*
Orna Berry*
Laura Bridge*
Alan Chambers*
Hon Wah Chin
Stephen W. Cooper*
Paul Cowell*
Andy Davis*
Mike Dickerson*
Richard Gilbert
Sharam Hakimi*
John H. Hart*
Anthony A. Jeffree*
Jan-Olof Jemnemo*
Henry D. Keen*
Alan Oppenheimer*
Richard Patti*
Venkat Prasad
Ronald Presti*
Rich Seifert
Steve Senum
Himanshu Shah*
W. Earl Smith
Robin Tasker*
Peter Videcrantz
Trevor Warwick
Amnon Yacoby*
Carolyn Zimmer

The following persons were on the balloting committee:

William B. Adams
Don Aelmore
Kit Athul
Paul W. Campbell
Michael Crumrine
John E. Emrich
Philip H. Enslow
John W. Fendrich
Harvey A. Freeman
Ingrid Fromm
Robert Gagliano
Warren W. Garman
Isaac Ghansah
Harry Gold
Julio Gonzalez-Sanz
Craig Guarnieri
Russell D. Housley
Richard J. Iliff
Anthony A. Jeffree
K. H. Kellermayr
Gary C. Kessler
Youngbum Kim
Lak Ming Lam
Lanse M. Leach
William Lidinsky
Randolph S. Little
Donald C. Loughry
Wen-Pai Lu
Joseph F. P. Luhukay
Peter Martini
Richard McBride
Ann Miller
David S. Millman
C. B. Madhab Mishra
John E. Montague
Kinji Mori
Vikram Punj
Yang Qianli
Philip T. Robinson
Daniel Rosich
Floyd E. Ross
Brian P. Schanning
Norman Schneidewind
Adarshpal S. Sethi
Donald A. Sheppard
Patrick Sheridan
John R. Shoch
Charles Spurgeon
Carel M. Stillebroer
Efstathiois Sykas
Daniel Sze
Ahmed N. Tantawy
Geoffrey O. Thompson
Robert Tripi
Mark-Rene Uchida
James T. Vorhies
Barry Vornbrock
Donald F. Weir
Alan J. Weissberger
Raymond Wenig
Priya Werahera
Earl J. Whitaker
Jerry A. Wyatt
Oren Yuen

Copyright International Organization for Standardization
Provided by IHS under license with ISO
No reproduction or networking permitted without license from IHS
Not for Resale

When the IEEE Standards Board approved this standard on 14 June 1995, it had the following membership:

E. G. "Al" Kiener, *Chair* **Donald C. Loughry,** *Vice Chair*
Andrew G. Salem, *Secretary*

Gilles A. Baril
Clyde R. Camp
Joseph A. Cannatelli
Stephen L. Diamond
Harold E. Epstein
Donald C. Fleckenstein
Jay Forster*
Donald N. Heirman
Richard J. Holleman
Jim Isaak
Ben C. Johnson
Sonny Kasturi
Lorraine C. Kevra
Ivor N. Knight
Joseph L. Koepfinger*
D. N. "Jim" Logothetis
L. Bruce McClung
Marco W. Migliaro
Mary Lou Padgett
John W. Pope
Arthur K. Reilly
Gary S. Robinson
Ingo Rusch
Chee Kiow Tan
Leonard L. Tripp

*Member Emeritus

Also included are the following nonvoting IEEE Standards Board liaisons:

Satish K. Aggarwal
Richard B. Engelman
Robert E. Hebner
Chester C. Taylor

Paula M. Kelty
IEEE Standards Project Editor

This standard was approved by the American National Standards Institute on 12 January 1996.

Note that editorial changes were made to the IEEE standard to accommodate concerns raised during the ISO/IEC JTC 1 balloting process. These are indicated in the text by a change bar (such as shown at the left of this paragraph).

Appletalk® is a registered trademark of Apple Computer, Inc.

Copyright International Organization for Standardization
Provided by IHS under license with ISO
No reproduction or networking permitted without license from IHS
Not for Resale

Contents

CLAUSE PAGE

1. Overview 1

1.1 Scope 1
1.2 Purpose 2

2. References 2

3. Definitions 3

4. Bridge MAC service-interface model 3

4.1 ISO/IEC 8802 service model 3
4.2 ISO/IEC 8802 plus Ethernet service model 4
4.3 ISO/IEC 8802 plus Ethernet plus RFC1042 service model 4
4.4 ISO/IEC 8802 plus Ethernet plus RFC1042 plus Bridge-Tunnel service model 5

5. The Selective Translation Algorithm 6

5.1 Frame translation and forwarding 7
5.2 The Selective Translation Table 10
5.3 The Bridge-Tunnel Encapsulation Protocol 10
5.4 RFC1042 Encapsulation Protocol 11

ANNEX

Annex A (normative) Recommended contents of the Selective Translation Table 12

Annex B (normative) Guideline for nonstandard ISO/IEC 8802 protocol design and migration 13

Annex C (informative) Compatibility 17

Annex D (informative) Bibliography 18

--`,,```,,,,````-`-`,,`,,`,`,,`---

Copyright International Organization for Standardization
Provided by IHS under license with ISO
No reproduction or networking permitted without license from IHS

Not for Resale

Information technology—
Telecommunications and information exchange between systems—
Local and metropolitan area networks—
Technical reports and guidelines—

Part 5: Media Access Control (MAC) Bridging of Ethernet V2.0 in Local Area Networks

1. Overview

ISO/IEC 10038: 1993[1] defines a standard for interconnecting ISO/IEC 8802 Local Area Networks (LANs) using media access control (MAC) Bridges. That standard provides facilities for the interconnection of stations attached to ISO/IEC 8802 LANs of different MAC types. This Technical Report extends those facilities to include the interconnection of nonstandard LANs to ISO/IEC 8802 LANs. The nonstandard LAN described is Ethernet (see Annex D).

(See Clause 3 for definitions used in this clause and elsewhere in this standard.)

1.1 Scope

For the purpose of facilitating the interoperability of ISO/IEC 10038 MAC Bridges and end stations in bridged LANs comprising CSMA/CD networks containing a mixture of ISO/IEC 8802-3 and Ethernet end stations and other types of LANs, this Technical Report specifies extensions to the behavior of MAC Bridges. To this end this Technical Report

a) Extends the Bridge service interface model to support multiple MAC services on a single LAN and to add a Bridge-Tunnel service interface.
b) Defines the Selective Translation Algorithm used by a Bridge to convert between Ethernet and ISO/IEC 8802 frame formats.
c) Defines the protocols used by a Bridge to convey Ethernet frames across ISO/IEC 8802 LANs, the Bridge-Tunnel Encapsulation Protocol, and the RFC1042 Encapsulation Protocol.

[1]Information on references can be found in Clause 2.

--`,,```,,,,````-`-`,,`,,`,`,,`---

Copyright International Organization for Standardization
Provided by IHS under license with ISO
No reproduction or networking permitted without license from IHS
Not for Resale

Additionally, for the purpose of avoiding future incompatibilities, this Technical Report provides guidelines for the development of nonstandard ISO/IEC 8802 protocols, with particular emphasis on conversion of existing Ethernet protocols and the behavior to be expected from a Bridge.

1.2 Purpose

The following are the express goals of this Technical Report:

a) Preservation of full interoperability between ISO/IEC 8802 LANs.
b) Enhancement of interoperability between ISO/IEC 8802 LANs and nonstandard LANs (i.e., Ethernet).
c) Encouragement of vendors to migrate to ISO/IEC 8802-based protocols.
d) Preservation of existing interoperability mechanisms between ISO/IEC 8802 LANs and nonstandard LANs.
e) Engendering the design of new ISO/IEC 8802 protocols, and the migration of existing Ethernet protocols, in a fashion that is compatible with Bridges and ISO/IEC 8802 end stations.

The following is *not* a goal of this Technical Report: Providing communication between two end stations, with the same physical LAN protocol, which are otherwise not capable of communicating when attached to a single LAN.

2. References

The following specifications contain provisions which, through reference in this text, constitute provisions of this standard. At the time of publication, the editions indicated were valid. All standards are subject to revision, and parties to agreements based on this standard are encouraged to investigate the possibility of applying the most recent editions of the standards listed below.

IEEE Std 802-1990, IEEE Standards for Local and Metropolitan Area Networks: Overview and Architecture (ANSI).[2]

ISO/IEC 8802-2: 1994 [ANSI/IEEE 802.2, 1994 Edition], Information technology—Telecommunications and information exchange between systems—Local and metropolitan area networks—Specific requirements—Part 2: Logical link control.[3]

ISO/IEC 8802-3: 1996 [ANSI/IEEE Std 802.3, 1996 Edition], Information technology—Telecommunications and information exchange between systems—Local and metropolitan area networks—Specific requirements—Part 3: Carrier sense multiple access with collision detection (CSMA/CD) access method and physical layer specifications.

ISO/IEC 8802-4: 1990 [ANSI/IEEE Std 802.4-1990], Information processing systems—Local area networks—Part 4: Token-passing bus access method and physical layer specifications.

ISO/IEC 8802-5: 1995 [ANSI/IEEE Std 802.5-1995], Information technology—Telecommunications and information exchange between systems—Local and metropolitan area networks—Specific requirements—Part 5: Token ring access method and physical layer specifications.

---

[2] IEEE publications are available from the Institute of Electrical and Electronic Engineers, 445 Hoes Lane, P.O. Box 1331, Piscataway, NJ 08855-1331, USA.

[3] ISO/IEC publications are available from the ISO Central Secretariat, 1 rue de Varembé, Case Postale 56, CH-1211 Genève 20, Switzerland. In the USA, they are available from the Sales Department, American National Standards Institute, 11 West 42nd Street, New York, NY 10036, USA. ISO/IEC 8802 standards (standards for Local and Metropolitan Area Networks) are also available from IEEE.

Copyright International Organization for Standardization
Provided by IHS under license with ISO
No reproduction or networking permitted without license from IHS
Not for Resale

ISO 9314-2: 1989, Information processing systems—Fibre Distributed Data Interface (FDDI), Part 2: Token Ring Media Access Control (MAC).

ISO/IEC 10038: 1993 [ANSI/IEEE Std 802.1D, 1993 Edition], Information technology—Telecommunications and information exchange between systems—Local area networks—Media access control (MAC) Bridges.

RFC1042, Postel & Reynolds, A Standard for the Transmission of IP Datagrams over IEEE 802 Networks, February 1988.[4]

RFC1103, Katz, A Proposed Standard for the Transmission of IP Datagrams over FDDI Networks, June 1989.

3. Definitions

3.1 ISO/IEC 8802 LAN: A local area network used to carry LLC frames. ISO/IEC 8802-5 is an ISO/IEC 8802 LAN, as is a pure ISO/IEC 8802-3 network. FDDI, although not described in an IEEE standard, is also considered an ISO/IEC 8802 LAN.

3.2 Ethernet LAN: A CSMA/CD LAN that does *not* use LLC headers on its frames but instead encodes a protocol type field directly after the source address.

3.3 CSMA/CD LAN: Any local area network using the CSMA/CD access protocol. An ISO/IEC 8802-3 LAN is a CSMA/CD LAN, as is an Ethernet LAN. Most CSMA/CD networks are hybrids, carrying both Ethernet and ISO/IEC 8802 style frames.

4. Bridge MAC service-interface model

The following subclauses show a progression of MAC service-interface models as seen by a Bridge that is connecting different types of LANs. The following progression shows the derivation of the model used in this standard:

a) Start with the simple case assumed by ISO/IEC 10038: 1993, where every LAN has one ISO/IEC 8802 (or FDDI) MAC service that sits below an ISO/IEC 8802.2 LLC.
b) Add the Ethernet service to the CSMA/CD LAN, and a corresponding "RFC1042" representation of the Ethernet service to the other ISO/IEC 8802 LANs.
c) Remember that the CSMA/CD LAN is an ISO/IEC 8802 LAN, and add the RFC1042 service to that LAN, creating a problem.
d) Finish by adding a "Bridge-Tunnel" service to the ISO/IEC 8802 LANs to resolve the problem created in item c).

4.1 ISO/IEC 8802 service model

ISO/IEC 10038: 1993 assumes that each connected LAN has an ISO/IEC 8802 MAC service interface below the LLC sublayer.

When frames are bridged from one type of LAN to another, the MAC is converted below the LLC sublayer; the LLC portion of the frame is passed transparently.

[4]Internet RFCs are retrievable by FTP at ds.internic.net /rfcnnn.txt (where nnn is a standard's publication number, such as 783 or 906), or call InterNIC at 1-800-444-4345 for information about receiving copies through the mail.

Copyright International Organization for Standardization
Provided by IHS under license with ISO
No reproduction or networking permitted without license from IHS
Not for Resale

This is shown diagrammatically in Figure 1.

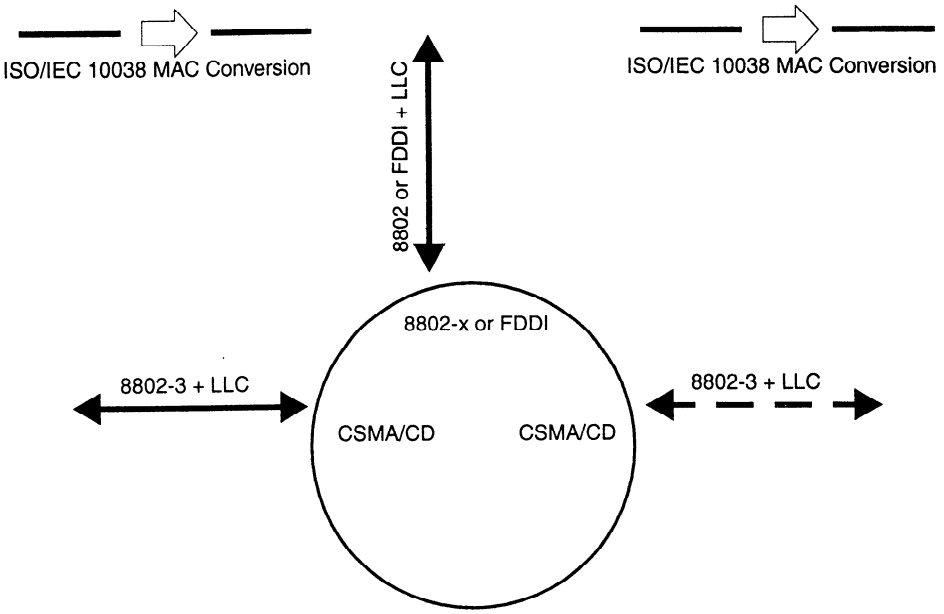

Figure 1—Simple ISO/IEC 8802 service model

4.2 ISO/IEC 8802 plus Ethernet service model

Figure 2 considers the situation in which, in addition to the ISO/IEC 8802 MAC service, a Bridge needs to accommodate the presence of Ethernet frames on the CSMA/CD LAN. Ethernet frames do not make use of the LLC sublayer services, but have a field (the protocol type) that identifies the protocol used in the remainder of the frame.

Since other ISO/IEC 8802 LANs do not provide an Ethernet MAC service, a translation is required to bridge Ethernet frames to an ISO/IEC 8802 LAN. RFC1042 specifies an algorithm for performing this translation, using the SNAP/SAP reserved LSAP as defined in IEEE Std 802-1990. This format can be viewed as an additional service interface on ISO/IEC 8802 LANs. The intent of the RFC1042 mapping is to provide interoperability between end stations that use the Ethernet service and end stations on ISO/IEC 8802 LANs (that do not provide an Ethernet service).

Frames can be bridged between the service interfaces as shown in the figure by ISO/IEC 10038 MAC conversion or by RFC1042 encapsulation/decapsulation. Note that the mapping is symmetrical, in the sense that frames can flow in either direction through Bridges, with consistent service interface irrespective of direction.

4.3 ISO/IEC 8802 plus Ethernet plus RFC1042 service model

Since a CSMA/CD LAN is also an ISO/IEC 8802 LAN, the additional RFC1042 service interface may exist on the CSMA/CD LAN as shown in Figure 3.

The service-interface mapping is no longer symmetrical. It is simple to bridge frames from a CSMA/CD LAN onto another LAN by mapping both the Ethernet and RFC1042 service into the RFC1042 service. When bridging frames back onto a CSMA/CD LAN, a choice needs to be made whether to map the RFC1042 service to RFC1042 or Ethernet. This choice cannot be made correctly simply by examining the frame when the goal is to map back to the original service interface, because the frame does not carry enough information.

Copyright International Organization for Standardization
Provided by IHS under license with ISO
No reproduction or networking permitted without license from IHS
Not for Resale

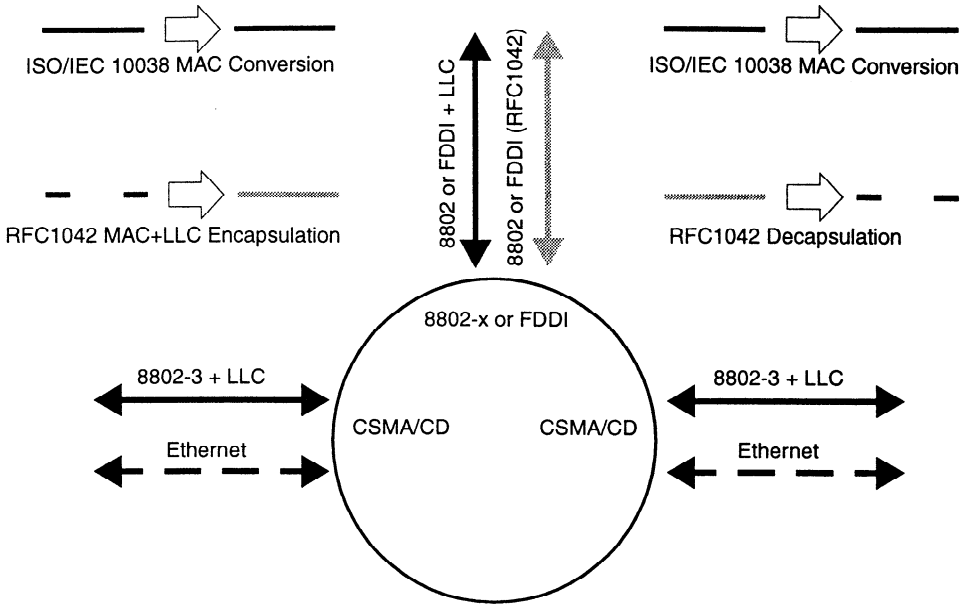

Figure 2—Simple ISO/IEC 8802 + Ethernet service model

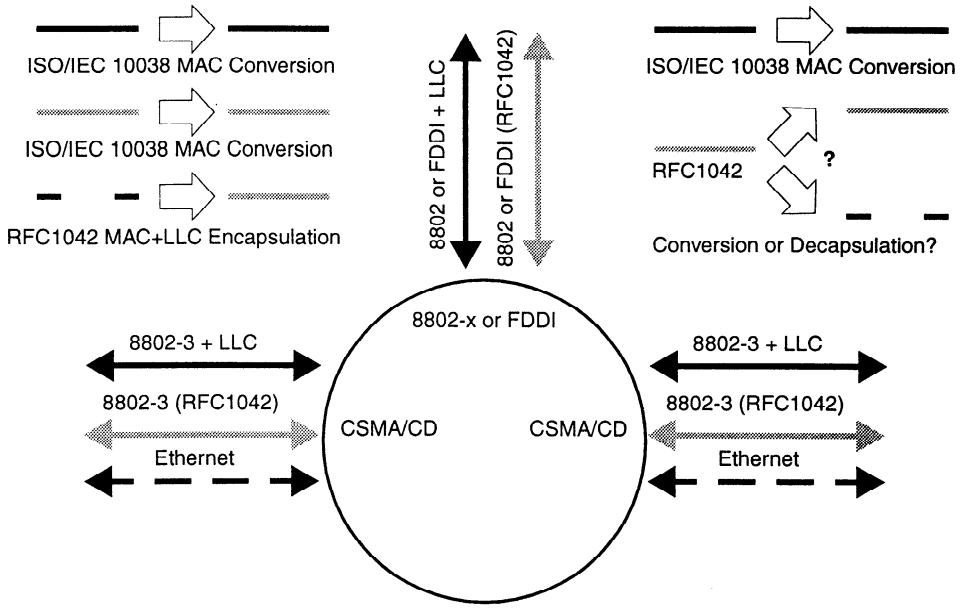

Figure 3—Problem ISO/IEC 8802 + Ethernet + RFC1042 service model

4.4 ISO/IEC 8802 plus Ethernet plus RFC1042 plus Bridge-Tunnel service model

Preservation of the MAC service-interface type for both Ethernet and RFC1042 services that transit an ISO/IEC 8802 LAN requires the addition of another service interface on the ISO/IEC 8802 LANs as shown in Figure 4. This new service is referred to as the "Bridge-Tunnel" service (4.4.1).

The Selective Translation Table (5.2) is used to determine the type of translation to be used for frames that are bridged between CSMA/CD LANs and other LANs. If the table contains correct information, then frames can be mapped correctly.

Copyright International Organization for Standardization
Provided by IHS under license with ISO
No reproduction or networking permitted without license from IHS
Not for Resale

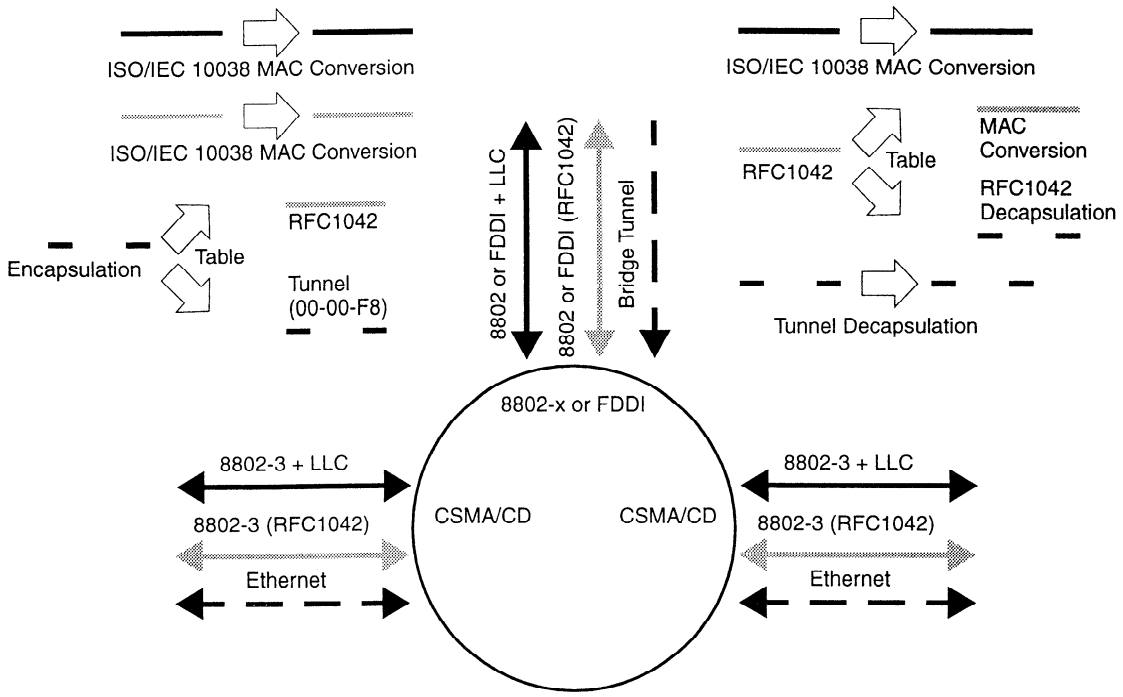

Figure 4—ISO/IEC 8802 + Ethernet + RFC1042 + Bridge-Tunnel service model

4.4.1 The Bridge-Tunnel service

The Bridge-Tunnel service is provided only to Bridges, and carries frames that have been encapsulated by the Bridge-Tunnel Encapsulation Protocol (5.3). This service is used to carry frames between Bridges when the service required by those frames is not present on an intervening LAN.

The Bridge-Tunnel service has some important characteristics that are necessary to resolve the ambiguity of 4.3:

a) The Bridge-Tunnel service does not exist on a LAN that supports the service being tunneled. That is, there is no Ethernet Tunnel service in parallel with an Ethernet service.
b) The Bridge-Tunnel service does not exist at end stations on a LAN. Frames that are sent by a Bridge through this interface are not received by end stations, since only frames destined for a CSMA/CD LAN, but in transit across an ISO/IEC 8802 LAN, will be sent through the Tunnel service. For clarification on end station behavior, see Annex B.

5. The Selective Translation Algorithm

The Selective Translation Algorithm specifies a mechanism for translating frames that are to be forwarded from one type of LAN to another in an ISO/IEC 10038 Bridge. The algorithm uses a Selective Translation Table (5.2) and a Bridge-Tunnel Encapsulation Protocol (5.3). This document covers only the case of forwarding frames between CSMA/CD LANs and ISO/IEC 8802 LANs, with selection for Ethernet frames.

Copyright International Organization for Standardization
Provided by IHS under license with ISO
No reproduction or networking permitted without license from IHS
Not for Resale

5.1 Frame translation and forwarding

5.1.1 General frame flow

Frame flow, and translation when forwarding, are described with reference to the configuration in Figure 5. Frames flow from left to right between the CSMA/CD LANs, via Bridge 1, the ISO/IEC 8802 or FDDI LAN, and Bridge 2.

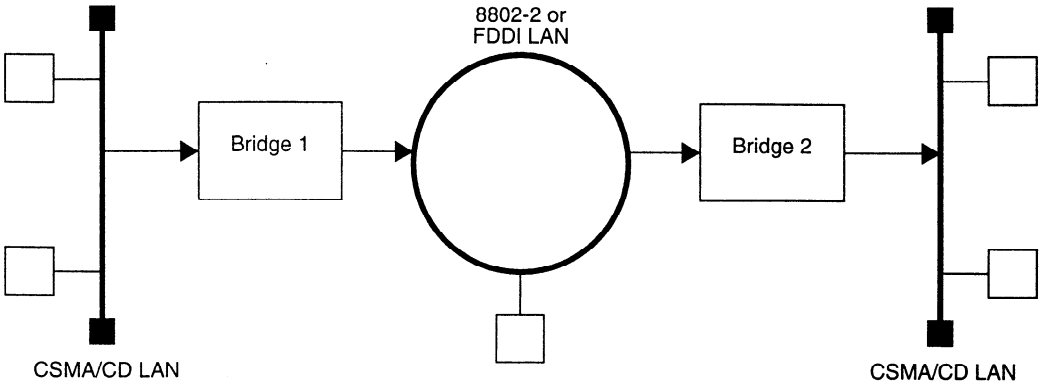

Figure 5—Frame-flow configuration

Figure 6 shows the translation process for frames being bridged between the two CSMA/CD LANs through the intervening ISO/IEC 8802 or FDDI LAN. In this diagram, the Bridges have synchronized Selective Translation Tables that correctly represent the service requirements. The Type refers to the protocol type from Ethernet MAC frames, or the equivalent protocol type embedded in the SNAP header of ISO/IEC 8802 frames.

Copyright International Organization for Standardization
Provided by IHS under license with ISO
No reproduction or networking permitted without license from IHS
Not for Resale

Selective Translation Algorithm frame flow Case 1: Correct, synchronized tables				
CSMA/CD LAN	**Type in Bridge 1 translation table**	**ISO/IEC 8802 or FDDI LAN**	**Type in Bridge 2 translation table**	**CSMA/CD LAN**
Ethernet MAC frame	No	ISO/IEC 8802 MAC frame, RFC1042-encoded (SNAP OUI 00-00-00)	No	Ethernet MAC frame
Ethernet MAC frame	Yes	ISO/IEC 8802 MAC frame, tunnel-encoded (SNAP OUI 00-00-F8)	Yes[b]	Ethernet MAC frame
ISO/IEC 8802-3 MAC frame RFC1042-encoded	Yes[a]	ISO/IEC 8802 MAC frame, RFC1042-encoded (SNAP OUI 00-00-00)	Yes	ISO/IEC 8802-3 MAC frame RFC1042-encoded
ISO/IEC 8802-3 MAC frame not RFC1042-encoded	N/A	ISO/IEC 8802 MAC frame	N/A	ISO/IEC 8802-3 MAC frame not RFC1042-encoded

[a] This table entry matches that in Bridge 2, but is not used in transferring this frame.
[b] This table entry matches that in Bridge 1, but is not used in transferring this frame.

Figure 6—Selective translation for correct tables

Figure 7 shows the translation process for frames when the two Bridges have different tables, or those tables do not correctly represent the requirements.

Selective Translation Algorithm frame flow Case 2: Incorrect or nonsynchronized tables				
CSMA/CD LAN	**Type in Bridge 1 translation table**	**ISO/IEC 8802 or FDDI LAN**	**Type in Bridge 2 translation table**	**CSMA/CD LAN**
Ethernet MAC frame	No	ISO/IEC 8802 MAC frame, RFC1042-encoded (SNAP OUI 00-00-00)	Yes	ISO/IEC 8802-3 MAC frame RFC1042-encoded (NOTE—Might be too big.)
ISO/IEC 8802-3 MAC frame RFC1042-encoded	N/A	ISO/IEC 8802 MAC frame, RFC1042-encoded (SNAP OUI 00-00-00)	No	Ethernet MAC frame

Figure 7—Selective translation for incorrect tables

Copyright International Organization for Standardization
Provided by IHS under license with ISO
No reproduction or networking permitted without license from IHS
Not for Resale

Figure 8 shows the translation process when an end station on the CSMA/CD LAN on the left of Figure 5 or on the ISO/IEC 8802/FDDI LAN inappropriately sends a Tunnel-Encapsulation frame.

Selective Translation Algorithm frame flow Case 3: End station sends Tunnel-encapsulated frame				
CSMA/CD LAN	**Type in Bridge 1 translation table**	**ISO/IEC 8802 or FDDI LAN**	**Type in Bridge 2 translation table**	**CSMA/CD LAN**
Tunnel-encoded frame (SNAP OUI 00-00-F8)	N/A	Tunnel-encoded frame (SNAP OUI 00-00-F8)	N/A	Ethernet MAC frame
		Tunnel-encoded frame (SNAP OUI 00-00-F8)	N/A	Ethernet MAC frame

Figure 8—Selective translation for incorrect end-stations

5.1.2 Frame forwarding from CSMA/CD to ISO/IEC 8802 LANs

A frame received from a CSMA/CD LAN to be forwarded to an ISO/IEC 8802 or FDDI LAN is translated as follows:

a) *Ethernet MAC frames.* The protocol type field in the MAC is checked against the Selective Translation Table (5.2):
   1) Protocol type **not in** table: The received Ethernet MAC is replaced by its RFC1042 (5.4) representation.
   2) Protocol type **in** table: The received Ethernet MAC is replaced by its Bridge-Tunnel Encapsulation Protocol (5.3) representation.

b) *Frames with ISO/IEC 8802-3 MAC.* The received ISO/IEC 8802-3 MAC is replaced by the appropriate outgoing MAC below the LLC as specified by ISO/IEC 10038: 1993.[5]

5.1.3 Forwarding from ISO/IEC 8802 LAN to CSMA/CD LAN

A frame received from an ISO/IEC 8802 or FDDI LAN to be forwarded to a CSMA/CD LAN is translated as follows (note that all frames have ISO/IEC 8802 or FDDI MAC below LLC):

a) *LLC is Bridge-Tunnel Encapsulation Protocol.* The Bridge-Tunnel MAC and LLC is replaced by its Ethernet MAC representation.

b) *LLC is RFC1042 protocol.* The protocol identifier in the SNAP header is checked against the Selective Translation Table:
   1) Protocol identifier **not in** table: The RFC1042 MAC and LLC is replaced by its Ethernet MAC representation.
   2) Protocol identifier **in** table: The received MAC is replaced by the ISO/IEC 8802-3 MAC below the LLC as specified by ISO/IEC 10038: 1993.

c) *Other LLC.* The received MAC is replaced by the ISO/IEC 8802-3 MAC below the LLC as specified by ISO/IEC 10038: 1993.

[5]Although Bridge Tunnel Encapsulation Protocol frames should not be transmitted on a CSMA/CD LAN, if such a frame were to be received, it would be considered a normal ISO/IEC 8802-3 frame and would be converted in this fashion. Bridges are not required to treat these frames as a special case.

Copyright International Organization for Standardization
Provided by IHS under license with ISO
No reproduction or networking permitted without license from IHS
Not for Resale

5.2 The Selective Translation Table

The Selective Translation Table is used by a Bridge to preserve the RFC1042 service for CSMA/CD LANs that are bridged through other LANs. This table contains a list of 16-bit protocol type values. The entries in the table identify protocols that use RFC1042 format on CSMA/CD LANs.

The characteristics that will be observed for protocols that are in the table are the following:

a) Frames that have an ISO/IEC 8802 MAC with an RFC1042 LLC will remain in this format, regardless of the type of LAN.
b) Frames that have an Ethernet MAC will remain in this format on LANs with Ethernet services, and will be "unobservably" tunneled through other LANs. There will not be end-station interoperability for the other LANs.

Note that, in the default case, Ethernet frames always will be Ethernet frames on Ethernet LANs. The table is necessary to allow selected RFC1042 frames to remain always as RFC1042 frames on Ethernet LANs.

Proper operation of the algorithm requires that the Selective Translation Tables are synchronized in all Bridges.

5.3 The Bridge-Tunnel Encapsulation Protocol

The Bridge-Tunnel Encapsulation Protocol is used by Bridges to exchange frames that require a service that is not available on an interconnecting LAN.

The translation is performed as shown in Figure 9 for the Ethernet service.

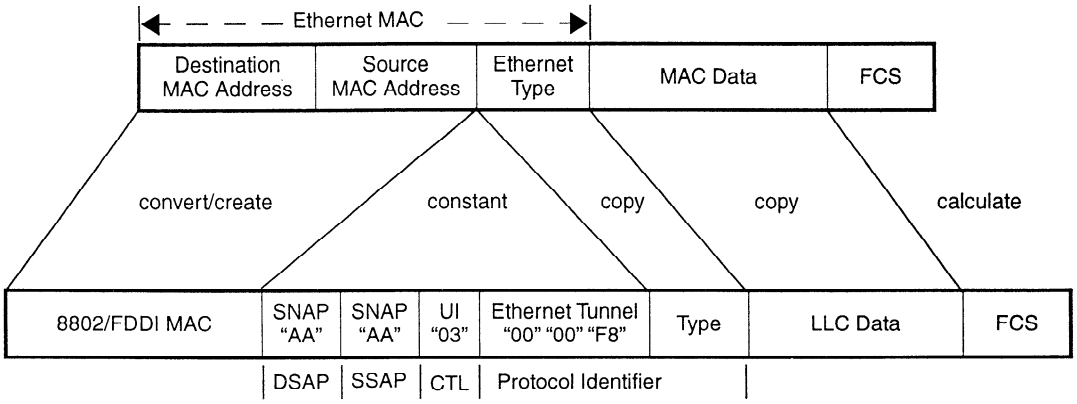

Figure 9—Ethernet Bridge-Tunnel Encapsulation

5.3.1 Translation from Ethernet to Bridge-Tunnel Encapsulation Protocol

a) The Source and Destination addresses of the Ethernet MAC are used to create a MAC header appropriate for the LAN type. This MAC header is built as specified in ISO/IEC 10038: 1993, 2.5.
b) The LLC header is formatted as an Unnumbered Information (UI) command with the SNAP/SAP values for the DSAP and SSAP fields. The protocol identifier is formatted using the Bridge-Tunnel Ethernet OUI (Table 1) as octets 0, 1, and 2 and the Ethernet protocol type as octets 3 and 4; the protocol identifier forms a part of the LLC data within the ISO/IEC 8802 MAC frame.
c) The MAC data is copied to the LLC data field beyond the protocol identifier data. Should the copied MAC data exceed the maximum size of the ISO/IEC 8802 MAC frame, the frame is discarded by the Bridge.
d) The FCS is recalculated.

Copyright International Organization for Standardization
Provided by IHS under license with ISO
No reproduction or networking permitted without license from IHS
Not for Resale

5.3.2 Translation from Bridge-Tunnel Encapsulation Protocol to Ethernet

a) The Source and Destination Addresses of the Ethernet MAC are taken from the ISO/IEC 8802 MAC.
b) The protocol type of the Ethernet MAC is taken from octets 3 and 4 of the SNAP protocol identifier.
c) The remaining LLC Data is copied to the MAC Data.
d) The FCS is recalculated.

Table 1—Bridge-Tunnel Ethernet OUI assignments

Assignment	OUI value
Bridge-Tunnel Ethernet	00-00-F8

5.4 RFC1042 Encapsulation Protocol

RFC1042 specifies a translation for Ethernet frames, such that they can be exchanged with end stations on LANs that do not provide an Ethernet service. The RFC1042 Encapsulation is performed as shown in Figure 10. Table 2 shows the OUI assignment for use in RFC1042 protocol identifiers.

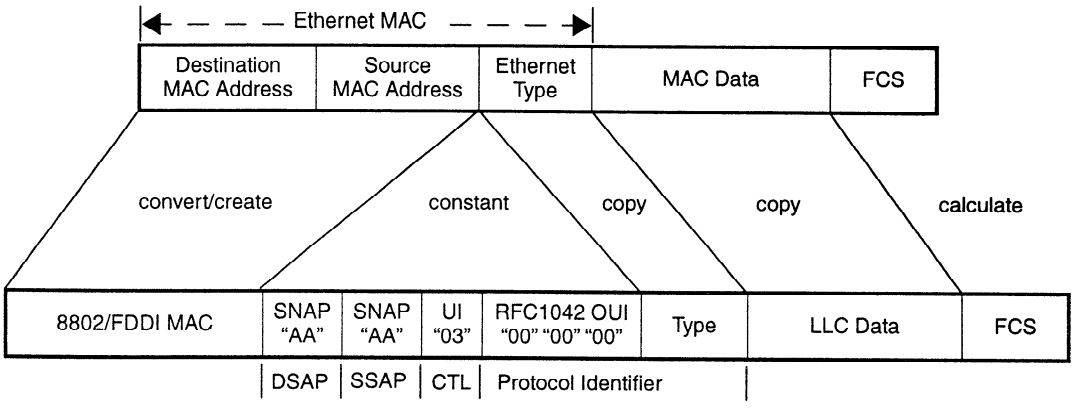

Figure 10—RFC1042 Encapsulation

Table 2—RFC1042 OUI assignments

Assignment	OUI value
RFC1042 Ethernet	00-00-00

Copyright International Organization for Standardization
Provided by IHS under license with ISO
No reproduction or networking permitted without license from IHS
Not for Resale

Annex A

(normative)

Recommended contents of the Selective Translation Table

This annex is provided as a service to Bridge users, to aid in determining the appropriate configuration for the Selective Translation Table (5.2). Note that there is no guarantee that this list is complete. Thus, provision should be made for additional protocols.

It is the express intent of this recommended practice that the table remain small. New protocols should be designed not to require inclusion in the table. Protocol designers should see Annex B for guidelines to avoid inclusion in the table.

It is not the intent of this recommended practice to preclude existing protocols from the table. All known protocols at the time of publication have been included. This recommended practice will be updated as necessary; notification of protocols for inclusion in the table should be made to the Working Group Chair (see Introduction in the front of this standard).

The protocols shown in Table A.1 are known to require selective translation at the time of this writing.

Table A.1—Recommended Selective Translation Table

Protocol use	Type value	Encoding in type field	
		First octet	Second octet
AppleTalk® Address Resolution Protocol	80F3	80	F3

Copyright International Organization for Standardization
Provided by IHS under license with ISO
No reproduction or networking permitted without license from IHS
Not for Resale

Annex B

(normative)

Guideline for nonstandard ISO/IEC 8802 protocol design and migration

Facilities exist for the creation of nonstandard LAN protocols that coexist with standard LAN protocols and standard LAN interworking devices (Bridges). This annex describes the use of these facilities, the requirements placed on nonstandard protocols, and a description of how to migrate an Ethernet-based protocol into an ISO/IEC 8802-based protocol.

B.1 Requirements for nonstandard LAN protocols

The requirements placed on nonstandard protocols to allow for coexistence are as follows:

a) The Physical layer and MAC sublayer must be as specified in the appropriate LAN standard (e.g., ISO/IEC 8802-3: 1996).

b) Above the MAC sublayer there must be an LLC sublayer as specified in ISO/IEC 8802-2: 1994. (Note, only LLC Type 1 is required).

c) Two mechanisms are provided to identify a nonstandard protocol at the data link layer. This identification is within the LLC sublayer, and should be done by one of the following methods:

   1) SNAP protocol identification (preferred method):

      IEEE Std 802-1990 defines the use of of a reserved LLC Address (LSAP) called the "SNAP/SAP." A portion of that definition follows:

      "IEEE 802 has assigned a single SAP address to SNAP for private and public protocol multiplexing and demultiplexing among multiple users of a data link. The reserved LSAP is called the SNAP/SAP and is defined to be (starting with the least significant bit): 01010101. All SNAP PDUs contain a protocol identification field. An organization uses its organizationally unique identifier (OUI) to identify, using a universal unique value, its own protocols.

      The protocol identifier is 40 bits in length and follows the logical link control header in a frame. The first 24 bits of the protocol identifier correspond to the OUI in exactly the same fashion as in 48-bit LAN MAC addresses. The remaining 16 bits are locally administered by the assignee. In the protocol identifier the OUI is contained in octets 0,1,2 with octets 3,4 being locally assigned.... "

      See below for an example use.

      The OUI used within the SNAP protocol identifier should be the same one assigned to the organization for the creation of unique MAC addresses.[1]

[1] Applicants interested in obtaining an OUI should contact the Registration Authority, c/o IEEE Standards Department, 445 Hoes Lane, Piscataway, NJ, 08855-1331, USA.

Copyright International Organization for Standardization
Provided by IHS under license with ISO
No reproduction or networking permitted without license from IHS
Not for Resale

This is the preferred method to use, because the protocol identification is guaranteed to be unique between different organizations, and thus offers little chance of misinterpretation when forming multivendor LANs.

2) Locally administered ISO/IEC 8802-2 LLC addresses (nonpreferred method):

ISO/IEC 8802-2: 1994 uses a bit in the address fields of the LLC header to designate an unrestricted (unreserved) address. An unrestricted address may be used to identify a locally administered SAP.

This is not the preferred method to use, because the protocol identification is not unique, and thus offers a great chance of misinterpretation when forming multivendor LANs.

B.1.1 Example protocol

Assume, for example, that the IEEE 802.1 Working Group wished to define a private protocol for exchanging birthday greetings between its members. IEEE 802 "owns" OUI 00-80-C2. The protocol definition for Birthday is as follows:

a) The Birthday protocol utilizes the ISO/IEC 8802 SNAP PDU format, with protocol identifier 00-80-C2-80-21.
b) Type 1 ISO/IEC 8802-2 LLC is used, with Birthday PDUs being carried within UI commands.
c) The MACs supported are ISO/IEC 8802-3, 8802-4, 8802-5, and FDDI.
d) Birthday PDUs use the Birthday Multicast address (01-80-C2-11-11-11) as the MAC Destination address.
e) A Birthday PDU consists of a null-terminated string of ASCII characters conveying the message.

Figure B.1 gives an example of a Birthday protocol message as it would appear on an ISO/IEC 8802-3 LAN.

B.2 How to migrate an Ethernet protocol to an ISO/IEC 8802 protocol

There are two ways in which an Ethernet-based protocol can be migrated to an ISO/IEC 8802-based protocol using the SNAP mechanism referred to in B.1:

a) Use your own OUI in the SNAP protocol identifier. This creates a protocol that may make full use of the ISO/IEC 8802-2 LLC and that will remain in the same LLC format regardless of the LAN on which it appears.
b) Use the RFC1042 OUI (00-00-00) in the SNAP protocol identifier on LANs that cannot carry Ethernet frames. Continue to use Ethernet format on LANs that can carry Ethernet frames. This creates a protocol that is backward compatible with existing end stations.

B.2.1 How to choose the OUI portion of the protocol identifier

Choose between your own OUI and the RFC1042 OUI by answering the following questions:

a) If this is a new protocol that is not compatible with any older Ethernet end-station software, then use your own OUI.
b) If this is a new protocol that is not compatible with any older Ethernet end-station software, and if it is desirable to use the same value in the locally administered portion of the SNAP protocol identifier as is being used in the protocol type field of an Ethernet protocol, then use your own OUI.

Copyright International Organization for Standardization
Provided by IHS under license with ISO
No reproduction or networking permitted without license from IHS
Not for Resale

		Octet	
802.3 MAC	MAC Destination	1	01
		2	80
		3	C2
		4	11
		5	11
		6	11
	MAC Source	7	00
		8	80
		9	C2
		10	12
		11	34
		12	56
	MAC Length	13	00
		14	0E
802.2 LLC	LLC DSAP (SNAP)	1	AA
	LLC SSAP (SNAP)	2	AA
	LLC Control (UI)	3	03
SNAP Protocol Identifier	OUI	1	00
		2	80
		3	C2
	local	4	80
		5	21
Birthday PDU	"Hello"	1	48
		2	65
		3	6C
		4	6C
		5	6F
		6	00

Figure B.1—Example protocol message

c) If it is desirable to differentiate between older Ethernet implementations and newer ISO/IEC 8802 implementations by examining the protocol frames, then use your own OUI.

d) If it is desirable to phase out older Ethernet implementations, to eventually use all new ISO/IEC 8802-based implementations, then use your own OUI.

e) If it is desirable to use ISO/IEC 8802-2 LLC Type 2, then use your own OUI.

f) If it is desirable to leave the older Ethernet implementations alone and to continue to support Ethernet indefinitely on CSMA/CD LANs, then use the RFC1042 OUI.

If you use your own OUI

a) You have defined a new protocol. Interoperation with end stations using an older Ethernet protocol will require newer end stations to support both protocols.

If you use the RFC1042 OUI (and do not want to have to place your Ethernet type in the Selective Translation Table):

Copyright International Organization for Standardization
Provided by IHS under license with ISO
No reproduction or networking permitted without license from IHS
Not for Resale

a) You have not defined a new protocol. The information that is conveyed within the LLC data field of the new ISO/IEC 8802-based protocol must have the same structure and usage as the information that was conveyed in the MAC data field of the old Ethernet-based protocol.
b) You cannot use LLC Type 2 with this protocol.
c) If a CSMA/CD end station sends a frame in the new ISO/IEC 8802-based format, it should be able to accommodate having that frame converted to Ethernet format by a Bridge. It should be able to accommodate receipt of a response in Ethernet format.

B.2.2 How to choose the local 16-bit portion of the protocol identifier

Organizations are requested to administer the last 2 octets of the SNAP protocol identifier such that each value uniquely identifies a protocol.

If you use your own OUI for the first 3 octets of the SNAP protocol identifier, then your organization sets its own policy for the administration of the full 16-bit range.

If you use the RFC1042 OUI, then the IETF administers the protocol identifier. The Internet Engineering Task Force (IETF) has designated that this field contains an Ethernet protocol type field value as administered by the Xerox corporation. If you have such an assignment from Xerox, then you should use the value corresponding to the Ethernet protocol that is being migrated. The IEEE is undertaking the responsibility for the administration of Ethernet Type Field Values as successor to Xerox.

Copyright International Organization for Standardization
Provided by IHS under license with ISO
No reproduction or networking permitted without license from IHS
Not for Resale

Annex C

(informative)

Compatibility

Bridges implementing ISO/IEC TR 11802-5 (ANSI/IEEE Std 802.1H) are backward compatible with ISO/IEC 10038 Bridges (which do not support Ethernet) by configuring a full (every protocol type) Selective Translation Table.

Bridges implementing ISO/IEC TR 11802-5 (ANSI/IEEE Std 802.1H) are backward compatible with Bridges that implement the simpler RFC1042 encapsulation/decapsulation for all Ethernet frames by configuring an empty Selective Translation Table.

Bridges that do not implement ISO/IEC TR 11802-5 (ANSI/IEEE Std 802.1H) will treat the Bridge-Tunnel Protocol frames as normal ISO/IEC 8802 frames and will forward these onto ISO/IEC 8802-3 LANs as ISO/IEC 8802-3 frames, which will be ignored by the end stations. Communication will therefore not be possible without configuring an empty Selective Translation Table.

Note, however, that protocols requiring selective translation cannot be supported by a mixture of Bridges that support ISO/IEC TR 11802-5 (ANSI/IEEE Std 802.1H) and Bridges that do not.

Copyright International Organization for Standardization
Provided by IHS under license with ISO
No reproduction or networking permitted without license from IHS
Not for Resale

Annex D

(informative)

Bibliography

The Ethernet, AA-K759B-TK, Digital Equipment, Intel, and Xerox Corps., Nov. 1982.

Copyright International Organization for Standardization
Provided by IHS under license with ISO
No reproduction or networking permitted without license from IHS
Not for Resale

This page intentionally left blank

--`,,```,,,,````-`-`,,`,,`,`,,`---

Copyright International Organization for Standardization
Provided by IHS under license with ISO
No reproduction or networking permitted without license from IHS

Not for Resale

ICS 35.110

Descriptors: data processing, information interchange, telecommunications, network interconnection, open systems interconnection, metropolitan area networks, local area networks, data transmission, control procedures, medium access control, addressing, technical reports, rules (instructions).

Price based on 18 pages

Copyright International Organization for Standardization
Provided by IHS under license with ISO
No reproduction or networking permitted without license from IHS

Not for Resale