STD.ISO TR 10192-2-ENGL 2000 ■ 4851903 0850677 310 ■

TECHNICAL REPORT

ISO/IEC TR 10192-2

First edition
2000-10

Information technology – Home Electronic System (HES) interfaces –

Part 2: Simple Interface Type 1

This material is reproduced from ISO documents under International Organization for Standardization (ISO) Copyright License Number IHS/CC/1996. Not for resale. No part of these ISO documents may be reproduced in any form, electronic retrieval System or otherwise, except written consent of ISO (Case postal 56,1211 Geneva 20, Switzerland, FAX +41 22 734 10 79), IHS or the ISO Licensor's members

Reference number
ISO/IEC TR 10192-2:2000(E)

Copyright International Organization for Standardization
Provided by IHS under license with ISO
No reproduction or networking permitted without license from IHS
Not for Resale

STD.ISO TR 10192-2-ENGL 2000 ■ 4851903 0850678 257 ■

TECHNICAL REPORT – TYPE 2

ISO/IEC TR 10192-2

First edition
2000-10

Information technology – Home Electronic System (HES) interfaces –

Part 2: Simple Interface Type 1

© ISO/IEC 2000

All rights reserved. Unless otherwise specified, no part of this publication may be reproduced or utilized in any form or by any means, electronic or mechanical, including photocopying and microfilm, without permission in writing from the publisher.

ISO/IEC Copyright Office • Case postale 56 • CH-1211 Genève 20 • Switzerland



PRICE CODE J

For price, see current catalogue

Copyright International Organization for Standardization
Provided by IHS under license with ISO
No reproduction or networking permitted without license from IHS

Not for Resale

STD·ISO TR 10192-2-ENGL 2000 ■ 4851903 0850679 193 ■

CONTENTS

Page

FOREWORD 4
INTRODUCTION 6

Clause

1 Scope 7
2 Normative references 7
3 Definitions 7
4 Abbreviations 8
5 Basic principles of the Simple Interface type 1 (SI type 1) 9
6 Functional characteristics of the SI type 1 10
6.1 Signal types and pin assignments 10
7 Electrical characteristics of the SI type 1 11
7.1 Currents and voltages on the SI type 1 conductors 11
7.2 Signal forms at the SI type 1 12
7.3 Maximum allowed voltages on the SI type 1 conductors 12
7.4 Isolation characteristics 12
8 Mechanical characteristics of the SI type 1 13
9 Safety of SI type 1 devices and NAUs 13
10 Testing of SI type 1 devices 13
10.1 Test conditions 13
10.2 Test circuit for the SI type 1 device 13
10.3 Functional test of SI type 1 devices 13
10.4 Short circuit test for SI type 1 devices 13

Annex A (informative) Photocoupler based implementation 14
Annex B (informative) Characteristics of the SI type 1 connector 15
B.1 SI type 1 device and NAU connector mechanical characteristics 15
B.2 Connector ratings 16

Bibliography 17

Copyright International Organization for Standardization
Provided by IHS under license with ISO
No reproduction or networking permitted without license from IHS
Not for Resale

Figure 1 – Basic reference model for the SI type 1 9
Figure 2 – Signals passing the SI type 1 10
Figure 3 – Currents and voltages on the SI type 1 conductors 11
Figure 4 – Signal forms at the SI type 1 12
Figure 5 – SI type 1 device testing 13
Figure A.1 – Basic configuration 14
Figure B.1 – SI type 1 device and NAU connector (male) 15
Figure B.2 – SI type 1 cable connector (female) 16

Table 1 – Signal type, symbols, potentials and pin assignments for the SI type 1 10
Table 2 – Electrical characteristics of SI type 1 11

Copyright International Organization for Standardization
Provided by IHS under license with ISO
No reproduction or networking permitted without license from IHS Not for Resale

INFORMATION TECHNOLOGY – HOME ELECTRONIC SYSTEM (HES) INTERFACES –

Part 2: Simple Interface Type 1

FOREWORD

1) ISO (International Organization for Standardization) and IEC (International Electrotechnical Commission) form the specialized system for worldwide standardization. National bodies that are members of ISO or IEC participate in the development of International Standards through technical committees established by the respective organization to deal with particular fields of technical activity. ISO and IEC technical committees collaborate in fields of mutual interest. Other international organizations, governmental and non-governmental, in liaison with ISO and IEC, also take part in the work.

2) In the field of information technology, ISO and IEC have established a joint technical committee, ISO/IEC JTC 1. Draft International Standards adopted by the joint technical committee are circulated to national bodies for voting. Publication as an International Standard requires approval by at least 75 % of the national bodies casting a vote.

3) Attention is drawn to the possibility that some of the elements of this International Standard may be the subject of patent rights. ISO and IEC shall not be held responsible for identifying any or all such patent rights.

The main task of IEC and ISO technical committees is to prepare International Standards. In exceptional circumstances, a technical committee may propose the publication of a technical report of one of the following types:

- type 1, when the required support cannot be obtained for the publication of an International Standard, despite repeated efforts;
- type 2, when the subject is still under technical development or where, for any other reason, there is the future but not immediate possibility of an agreement on an International Standard;
- type 3, when the technical committee has collected data of a different kind from that which is normally published as an International Standard, for example 'state of the art'.

Technical reports of types 1 and 2 are subject to review within three years of publication to decide whether they can be transformed into International Standards. Technical reports of type 3 do not necessarily have to be reviewed until the data they provide are considered to be no longer valid or useful.

ISO/IEC 10192-2, which is a technical report of type 2, was prepared by subcommittee 25: Interconnection of information technology equipment, of ISO/IEC joint technical committee 1: Information technology.

This publication was drafted in accordance with ISO/IEC directives, Part 3.

This document is issued in the type 2 technical report series of publications (according to 15.2.2 of the Procedures for the technical work of ISO/IEC JTC 1 (1998)) as a prospective standard for provisional application in the field of the Home Electronic System (HES), because there is an urgent requirement for guidance on how standards in this field should be used to meet an identified need.

This document is not to be regarded as an International Standard. It is proposed for provisional application so that information and experience of its use in practice may be gathered. Comments on the content of this document should be sent to IEC Central Office.

Copyright International Organization for Standardization
Provided by IHS under license with ISO
No reproduction or networking permitted without license from IHS Not for Resale

A review of this type 2 technical report will be carried out not later than three years after its publication with the option of extension for a further three years or conversion either to an International Standard or withdrawal.

This document which is purely informative is not to be regarded as an International Standard.

Annexes A and B are for information only.

Copyright International Organization for Standardization
Provided by IHS under license with ISO
No reproduction or networking permitted without license from IHS Not for Resale

INTRODUCTION

A Simple Interface (SI) is an interface between devices and a home network in the Home Electronic System (HES).

The SI type 1 connects simple devices offering and accepting only a two state signal to an HES home network. Two signals are available at the SI type 1. One is a control signal for turning the device on and off. The other is a monitor signal for checking the state of the device.

ISO/IEC 10192: *Information technology – Home Electronic System (HES) interfaces* presently consists of two parts:

- *Part 1: Universal interface class 1*
- *Part 2: Simple interface type 1*

Copyright International Organization for Standardization
Provided by IHS under license with ISO
No reproduction or networking permitted without license from IHS Not for Resale

INFORMATION TECHNOLOGY – HOME ELECTRONIC SYSTEM (HES) INTERFACES –

Part 2: Simple Interface Type 1

1 Scope

This part of ISO/IEC 10192-2 specifies the mechanical, electrical, functional and procedural characteristics of a specific Simple Interface (SI). The SI type 1 is a physical interface realized between the SI type 1 device and the SI type 1 Network Access Unit, NAU. It also serves as a reference point.

2 Normative references

The following normative documents contain provisions which, through reference in this text, constitute provisions of this part of ISO/IEC 10192. For dated references, subsequent amendments to, or revisions of, any of these publications do not apply. However, parties to agreements based on this part of ISO/IEC 10192 are encouraged to investigate the possibility of applying the most recent edition of the normative documents indicated below. For undated references, the latest edition of the normative document referred to applies. Members of IEC and ISO maintain registers of currently valid International Standards.

IEC 60364, *Electrical Installations of buildings*

IEC 60664 (all parts), *Insulation coordination for equipment within low-voltage systems*

IEC 60068-2 (all parts), *Environmental testing*

IEC 60950, *Safety of information technology equipment*

3 Definitions

For the purpose of this Technical Report the following definitions apply.

3.1
simple interface
interface above the application layer to be used for and by simple devices such as actuators and sensors within an HES

The SI type 1 offers only one/zero commands and accepts only one/zero entries. The specification of the SI type 1 includes the necessary mechanical, electrical, functional and procedural characteristics of the interface.

3.2
process interfaces
a family of interfaces above the application layer between a home network and the devices to be connected to it

3.3
SI network access unit, SI NAU
NAU supporting and offering an SI

Copyright International Organization for Standardization
Provided by IHS under license with ISO
No reproduction or networking permitted without license from IHS Not for Resale

3.4
SI device
device supporting and offering an SI

3.5
SI conductors
conductors connecting an SI NAU and an SI device

3.6
SI connection
connection point between the SI cable (where applicable) and the SI device

3.7
isolating functions
functions providing safety isolation between the SI device and the SI NAU

3.8
on state
state in which the SI device is performing its intrinsic function

3.9
off state
state in which the SI device is not performing its intrinsic function

3.10
control signal
signal transmitted via the SI NAU to the SI device to set the state of the SI device

3.11
monitor signal
signal indicating the state of the SI device transmitted from the SI device to the SI NAU

3.12
static monitor signal
one of two forms of the monitor signal, characterized by the high signal state during the device on state and the low signal state during the device off state

3.13
dynamic monitor signal
one of two forms of the monitor signal, in which the device on state is represented by the monitor signal continuously being switched between the high and low signal levels

4 Abbreviations

The following abbreviations are used in this Technical Report.

HES: Home Electronic System

NAU: Network Access Unit

PI: Process Interface

SI: Simple Interface

Copyright International Organization for Standardization
Provided by IHS under license with ISO
No reproduction or networking permitted without license from IHS Not for Resale

5 Basic principles of the Simple Interface type 1 (SI type 1)

The SI type 1 is an interface between simple devices and home networks making the devices network independent. It is one of the family of Process Interfaces. The basic reference model for the SI type 1 is the same as for all Process Interfaces (see figure 1). The difference from other PIs lies in the different services offered to the device via the SI type 1.

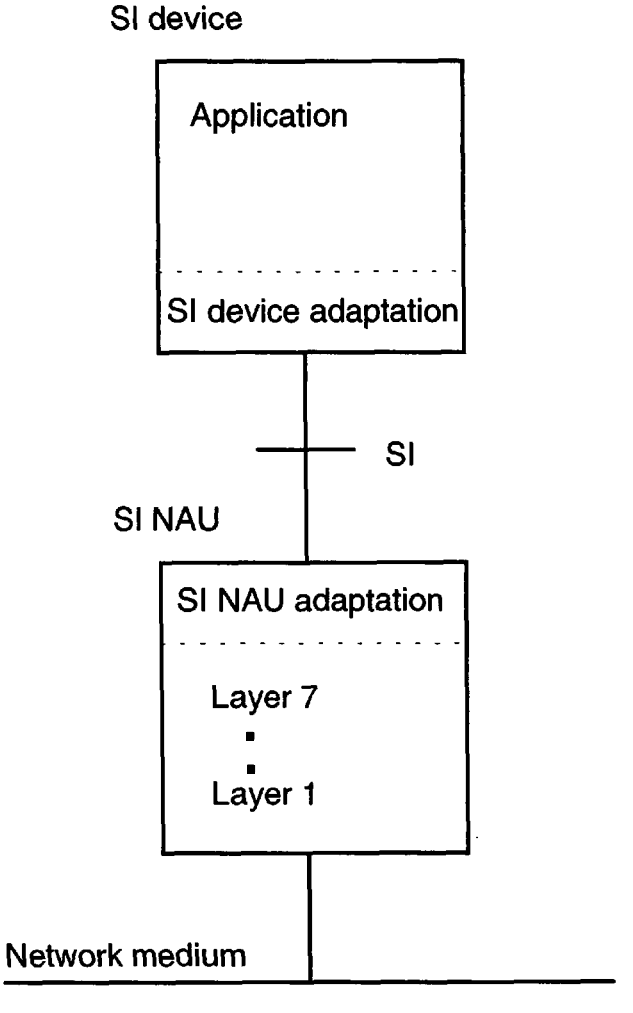

Figure 1 – Basic reference model for the SI type 1

Copyright International Organization for Standardization
Provided by IHS under license with ISO
No reproduction or networking permitted without license from IHS
Not for Resale

6 Functional characteristics of the SI type 1

6.1 Signal types and pin assignments

Figure 2 shows the signals passing through the SI type 1.

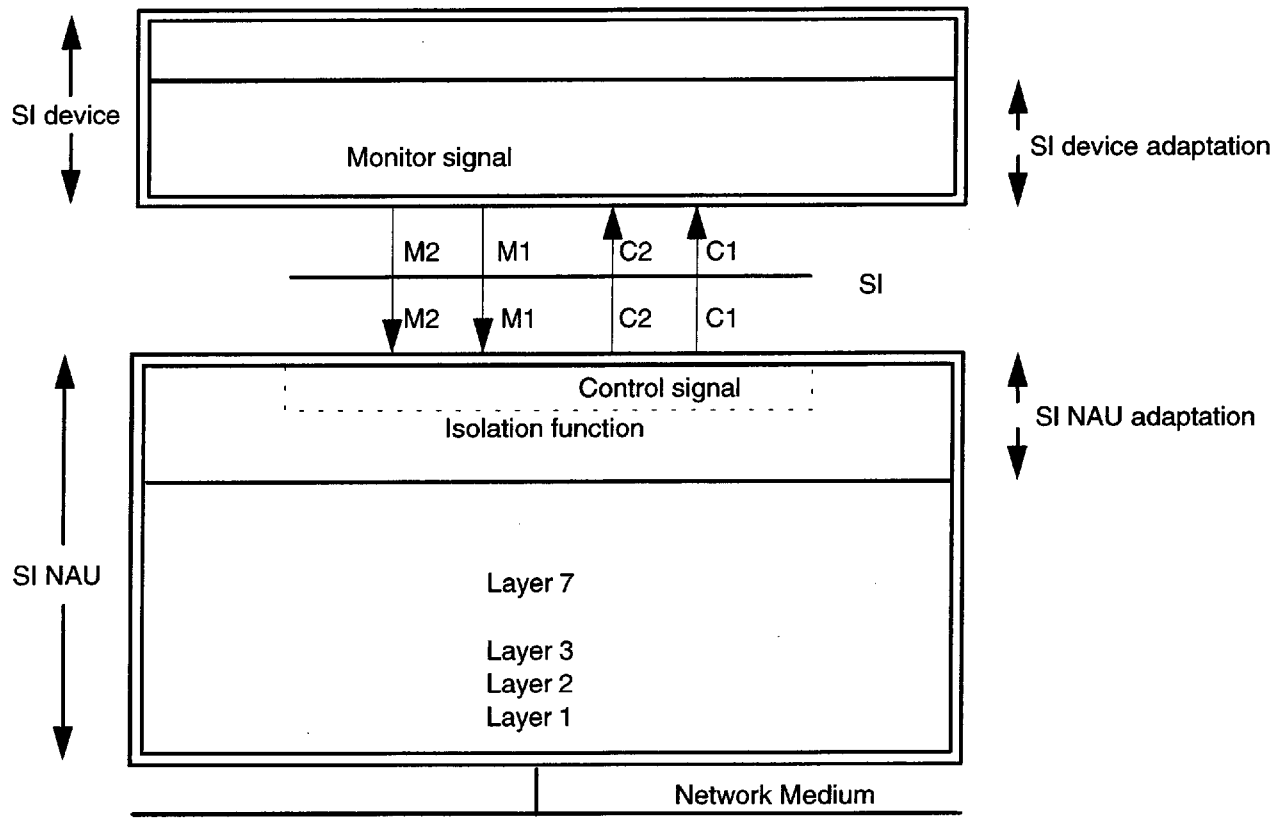

Figure 2 – Signals passing the SI type 1

NOTE Annex A shows a photocoupler based example of an implementation of the isolating function.

Table 1 shows signal types, symbols, potentials and pin assignments for the SI type 1.

Table 1 – Signal type, symbols, potentials and pin assignments for the SI type 1

Signal type	Symbol	Potential	Pin No.
Control signal	C1	High	4
	C2	Low	3
Monitor signal	M1	High	2
	M2	Low	1

Copyright International Organization for Standardization
Provided by IHS under license with ISO
No reproduction or networking permitted without license from IHS Not for Resale

7 Electrical characteristics of the SI type 1

7.1 Currents and voltages on the SI type 1 conductors

Figure 3 shows the defined directions for currents and voltages on the SI type 1 conductors. The arrows show the positive current and voltage directions.

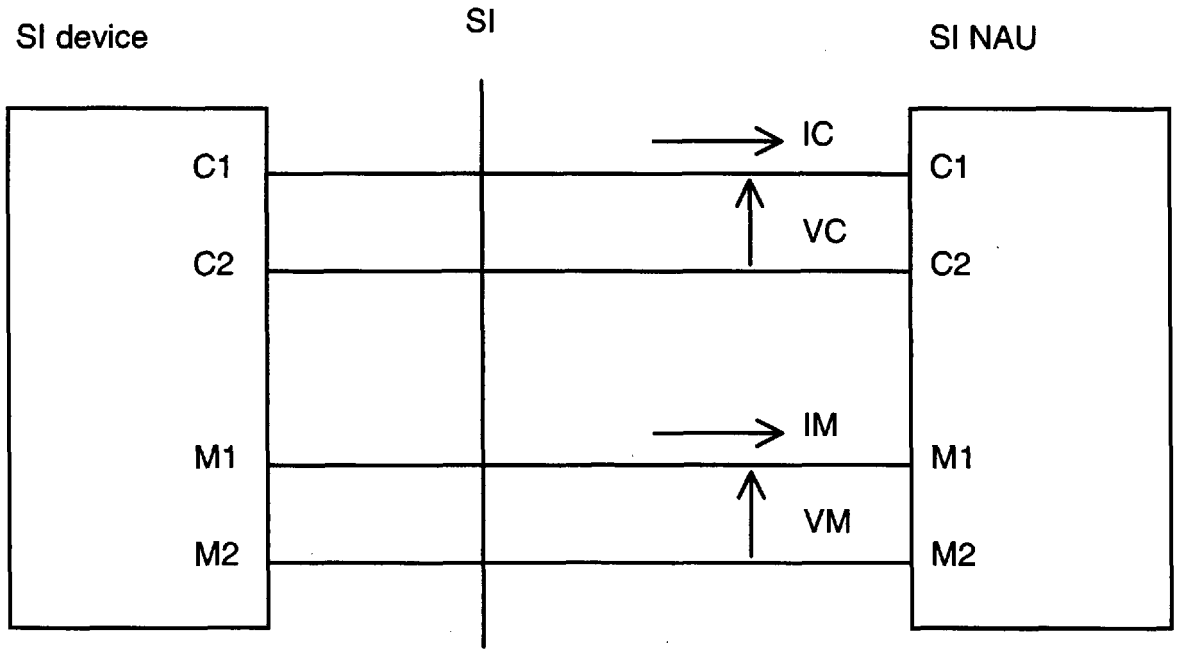

Figure 3 – Currents and voltages on the SI type 1 conductors

The specification of the currents and voltages are summarized in table 2.

Table 2 – Electrical characteristics of SI type 1

		State	Electrical characteristics			
			SI type 1 device side		SI type 1 NAU side	
Control	IC	On	Detect current	<2 mA	Current	>2 mA
			Max. current	5 mA	Max. current	5 mA
		Off	Detect current	50 µA	Max. leak current	<50 µA
	VC	On	Detect voltage	0,6 V	Voltage	<0,6 V
		Off	Max. voltage	30 V	Min. withstand voltage	>30 V
Monitoring	IM	On	Average current	(2 to 20) mA	Detect current	<2 mA
					Max. current	20 mA
			Peak current	<50 mA	Max. peak current	50 mA
		Off	Max. leak current	<10 µA	Detect current	10 µA
	VM	On	—	—	Voltage	<1,6 V
		Off	Voltage	<0,3 V	—	—
NOTE The average values apply to the static signals while the peak values apply to the dynamic signals.						

Copyright International Organization for Standardization
Provided by IHS under license with ISO
No reproduction or networking permitted without license from IHS Not for Resale

7.2 Signal forms at the SI type 1

Figure 4 shows the signal forms of the control signal and the two types of monitor signals.

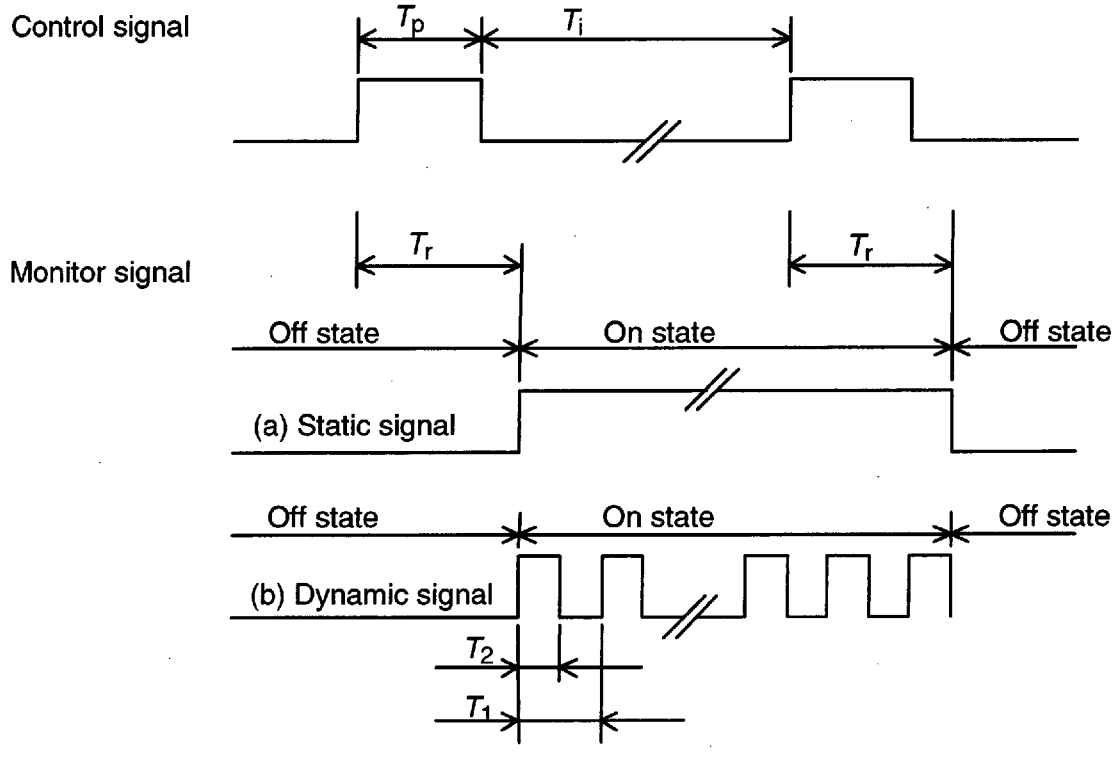

200 ms ≤ T_p (pulse duration) ≤ 300 ms

T_i (pulse interval) ≥ 200 ms

T_r (response time ≤ 350 ms

T_1 (dynamic signal period) ≤ 20 ms

T_2 (dynamic signal duration) ≥ 1 ms

$T_2 / T_1 \geq 0{,}15$

Figure 4 – Signal forms at the SI type 1

The control signal toggles the state of the device but the monitor signal shows the actual state.

SI type 1 NAUs shall react similarly to both forms of the monitor signal permitted by this Technical Report.

7.3 Maximum allowed voltages on the SI type 1 conductors

Voltages on the SI type 1 conductors shall not exceed Safety Extra Low Voltage (SELV) between conductors and between conductors and earth, as specified in IEC 60664.

7.4 Isolation characteristics

Safety isolation shall be in accordance with the requirements IEC 60364 and IEC 60664 for Safety Extra Low Voltage and Protected Extra Low Voltage.

Copyright International Organization for Standardization
Provided by IHS under license with ISO
No reproduction or networking permitted without license from IHS
Not for Resale

8 Mechanical characteristics of the SI type 1

The connector for the SI type 1 is the connector shown in annex B. The nominal length of the SI type 1 cable is two metres, but there is no limitation on the length of the SI type 1 cable if electrical requirements are satisfied. It is also possible to have a screw terminal connection at the SI type 1 NAU.

9 Safety of SI type 1 devices and NAUs

SI type 1 devices and NAUs shall fulfil the general HES requirements on safety, which are under consideration within IEC.

10 Testing of SI type 1 devices

10.1 Test conditions

All tests shall be completed under the conditions specified in IEC 60068-2 and IEC 60950.

10.2 Test circuit for the SI type 1 device

Figure 5 shows a circuit for testing an SI type 1 device.

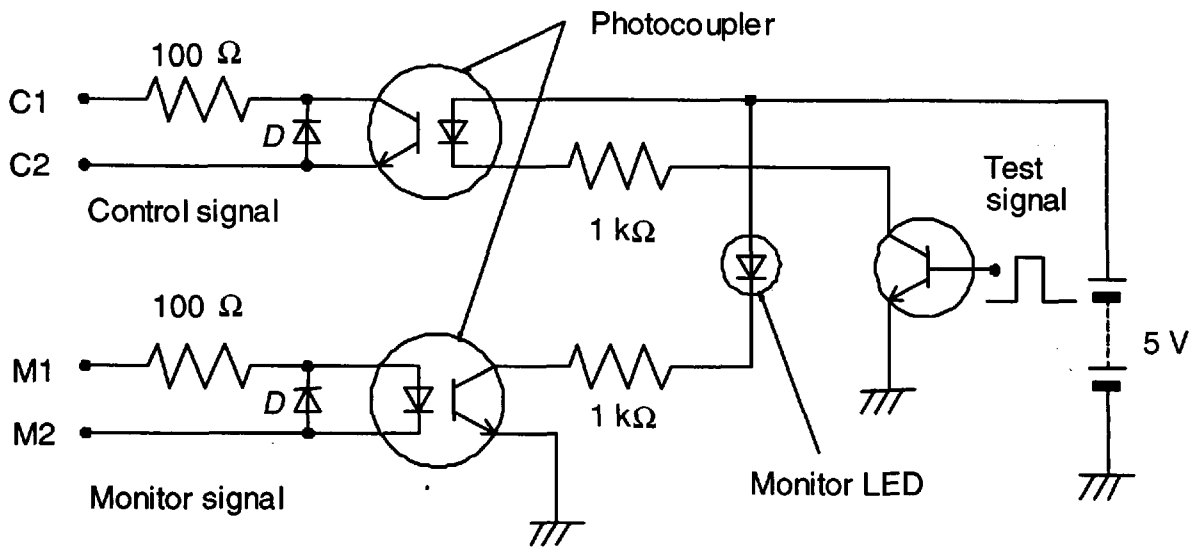

Forward current of *D* is at least 100 mA or more

Figure 5 – SI type 1 device testing

10.3 Functional test of SI type 1 devices

Applying a test signal with the form of the control signal shown in figure 4 shall change the state of the SI type 1 device. The state of the device is shown on the monitor LED. When the state of the device is "on" the LED will light.

10.4 Short circuit test for SI type 1 devices

Connect M1, M2, C1 and C2 together, and turn on the power of the SI type 1 device. After disconnection the SI device shall operate normally.

Copyright International Organization for Standardization
Provided by IHS under license with ISO
No reproduction or networking permitted without license from IHS Not for Resale

Annex A
(informative)

Photocoupler based implementation

Figure A.1 shows the basic configuration of the SI type 1 using a photocoupler as isolation. The arrows show the positive current and voltage directions.

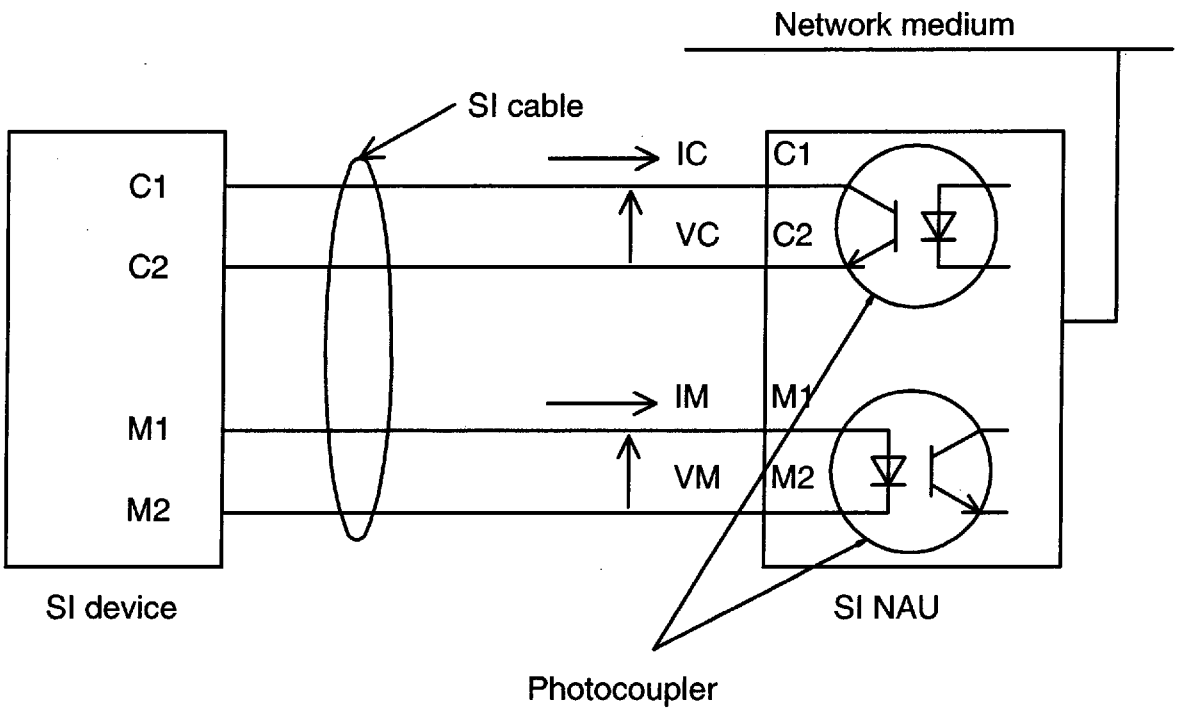

Figure A.1 – Basic configuration

Copyright International Organization for Standardization
Provided by IHS under license with ISO
No reproduction or networking permitted without license from IHS
Not for Resale

Annex B
(informative)

Characteristics of the SI type 1 connector

B.1 SI type 1 device and NAU connector mechanical characteristics

Figure B.1 shows the SI type 1 device and NAU connector (male). Figure B.2 shows the corresponding cable connectors (female).

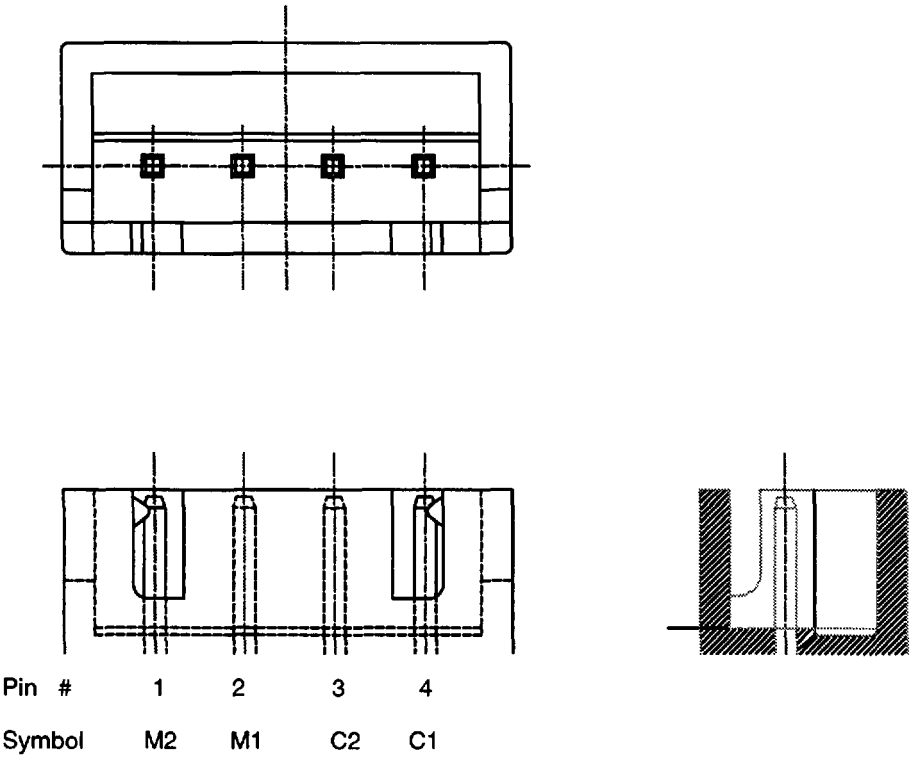

Figure B.1 – SI type 1 device and NAU connector (male)

Copyright International Organization for Standardization
Provided by IHS under license with ISO
No reproduction or networking permitted without license from IHS
Not for Resale

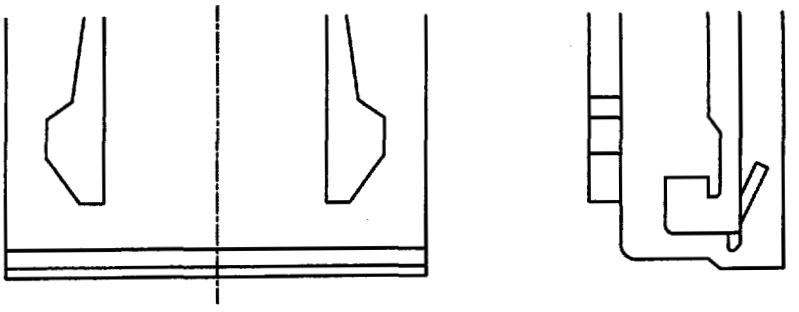

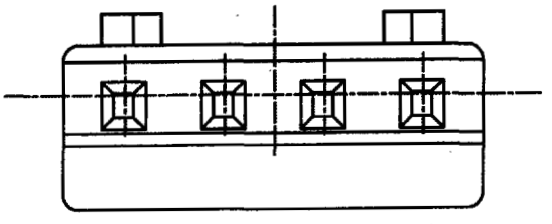

Pin #	1	2	3	4
Symbol	M2	M1	C2	C1

Figure B.2 – SI type 1 cable connector (female)

B.2 Connector ratings

The connectors must satisfy the following conditions:

- Operating temperature range: –25 °C to 85 °C
- Operating humidity range: relative humidity 85 % or less
- Maximum supply voltage: 50 V d.c. or a.c.
- Maximum supply current: 1 A d.c. or a.c.
- Nominal cross-sectional area of conductor: 0,18 mm^2 to 0,33 mm^2

Copyright International Organization for Standardization
Provided by IHS under license with ISO
No reproduction or networking permitted without license from IHS Not for Resale

Bibliography

IEC 60742, *Isolating transformers and safety isolating transformers – Requirements*

ISO/IEC 14762, *Guidelines for Functional Safety for Home Control Systems* (to be published)

Copyright International Organization for Standardization
Provided by IHS under license with ISO
No reproduction or networking permitted without license from IHS Not for Resale



Standards Survey

The IEC would like to offer you the best quality standards possible. To make sure that we continue to meet your needs, your feedback is essential. Would you please take a minute to answer the questions overleaf and fax them to us at +41 22 919 03 00 or mail them to the address below. Thank you!

Customer Service Centre (CSC)
International Electrotechnical Commission
3, rue de Varembé
1211 Genève 20
Switzerland

or

Fax to: **IEC**/CSC at +41 22 919 03 00

Thank you for your contribution to the standards-making process.

Nicht frankieren
Ne pas affranchir



Non affrancare
No stamp required

A Prioritaire

RÉPONSE PAYÉE

SUISSE

Customer Service Centre (CSC)
International Electrotechnical Commission
3, rue de Varembé
1211 GENEVA 20
Switzerland



Copyright International Organization for Standardization
Provided by IHS under license with ISO
No reproduction or networking permitted without license from IHS
Not for Resale

Q1 Please report on **ONE STANDARD** and **ONE STANDARD ONLY**. Enter the exact number of the standard: *(e.g. 60601-1-1)*

.....

Q2 Please tell us in what capacity(ies) you bought the standard *(tick all that apply)*. I am the/a:

- purchasing agent ❑
- librarian ❑
- researcher ❑
- design engineer ❑
- safety engineer ❑
- testing engineer ❑
- marketing specialist ❑
- other.....

Q3 I work for/in/as a: *(tick all that apply)*

- manufacturing ❑
- consultant ❑
- government ❑
- test/certification facility ❑
- public utility ❑
- education ❑
- military ❑
- other.....

Q4 This standard will be used for: *(tick all that apply)*

- general reference ❑
- product research ❑
- product design/development ❑
- specifications ❑
- tenders ❑
- quality assessment ❑
- certification ❑
- technical documentation ❑
- thesis ❑
- manufacturing ❑
- other.....

Q5 This standard meets my needs: *(tick one)*

- not at all ❑
- nearly ❑
- fairly well ❑
- exactly ❑

Q6 If you ticked NOT AT ALL in Question 5 the reason is: *(tick all that apply)*

- standard is out of date ❑
- standard is incomplete ❑
- standard is too academic ❑
- standard is too superficial ❑
- title is misleading ❑
- I made the wrong choice ❑
- other .....

Q7 Please assess the standard in the following categories, using the numbers:
(1) unacceptable,
(2) below average,
(3) average,
(4) above average,
(5) exceptional,
(6) not applicable

- timeliness.....
- quality of writing.....
- technical contents.....
- logic of arrangement of contents .....
- tables, charts, graphs, figures.....
- other .....

Q8 I read/use the: *(tick one)*

- French text only ❑
- English text only ❑
- both English and French texts ❑

Q9 Please share any comment on any aspect of the IEC that you would like us to know:

.....
.....
.....
.....
.....
.....
.....
.....
.....
.....
.....
.....

Copyright International Organization for Standardization
Provided by IHS under license with ISO
No reproduction or networking permitted without license from IHS
Not for Resale

ISBN 2-8318-5531-4



ICS 35.200

Typeset and printed by the IEC Central Office
GENEVA, SWITZERLAND

Copyright International Organization for Standardization
Provided by IHS under license with ISO
No reproduction or networking permitted without license from IHS

Not for Resale