TECHNICAL REPORT

ISO/IEC TR 10172

First edition
1991-09-15

Information technology — Telecommunications and information exchange between systems — Network/Transport Protocol interworking specification

Technologies de l'information — Téléinformatique — Spécification d'interprétation pour les protocoles transport/réseau

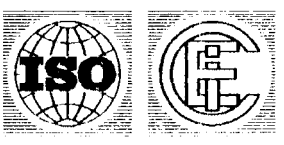

Reference number
ISO/IEC TR 10172:1991(E)

Copyright International Organization for Standardization
Provided by IHS under license with ISO
No reproduction or networking permitted without license from IHS

Not for Resale

Contents

Page

Foreword iii

Introduction iv

1 Scope 1

2 Normative References 1

3 Definitions 3

4 Symbols and abbreviations 3

5 Overview of IFU 4

6 Conformance 8

7 Environmental requirements for use of an IFU 9

8 Operation of the Active Transport Layer Relay 10

9 Operation of the Passive Transport Layer Relay 16

10 Selection of IFU mode of operation 20

Annexes

A PICS proforma 22

B Local coordination between TCs in an ATLR 25

© ISO/IEC 1991
All rights reserved. No part of this publication may be reproduced or utilized in any form or by any means, electronic or mechanical, including photocopying and microfilm, without permission in writing from the publisher.

ISO/IEC Copyright Office • Case Postale 56 • CH-1211 Genève 20 • Switzerland

Printed in Switzerland

Copyright International Organization for Standardization
Provided by IHS under license with ISO
No reproduction or networking permitted without license from IHS
Not for Resale

Foreword

ISO (the International Organization for Standardization) and IEC (the International Electrotechnical Commission) form the specialized system for worldwide standardization. National bodies that are members of ISO or IEC participate in the development of International Standards through technical committees established by the respective organization to deal with particular fields of technical activity. ISO and IEC technical committees collaborate in fields of mutual interest. Other international organizations, governmental and non-governmental, in liaison with ISO and IEC, also take part in the work.

In the field of information technology, ISO and IEC have established a joint technical committee, ISO/IEC JTC 1.

The main task of technical committees is to prepare International Standards, but in exceptional circumstances a technical committee may propose the publication of a Technical Report of one of the following types:

— type 1, when the required support cannot be obtained for the publication of an International Standard, despite repeated efforts;

— type 2, when the subject is still under technical development or where for any other reason there is the future but not immediate possibility of an agreement on an International Standard;

— type 3, when a technical committee has collected data of a different kind from that which is normally published as an International Standard ("state of the art", for example).

Technical Reports of types 1 and 2 are subject to review within three years of publication, to decide whether they can be transformed into International Standards. Technical Reports of type 3 do not necessarily have to be reviewed until the data they provide are considered to be no longer valid or useful.

ISO/IEC/TR 10172, which is a Technical Report of type 2, was prepared by Joint Technical Committee ISO/IEC JTC 1, *Information technology*.

Annex A forms an integral part of this Technical Report. Annex B is for information only.

Copyright International Organization for Standardization
Provided by IHS under license with ISO
No reproduction or networking permitted without license from IHS
Not for Resale

Introduction

There exist today two different types of data communications network layer protocols under the auspices of ISO Open Systems Interconnection (OSI), yet systems operating either of these protocol types cannot interconnect. The Connection-mode Network Protocol (CONP) ISO 8208/(X.25) operated in accordance with ISO 8878 cannot interwork with the Connectionless-mode Network Protocol (CLNP) ISO 8473. In order to achieve interworking of these two disparate protocols there is need for a mediating device to perform relaying and/or conversion of PDUs from one network protocol type to another, this device is termed an Interworking Functional Unit (IFU). In solving this problem of CO/CL Interworking two broad objectives must be considered:

a) the IFU must not impose any changes on existing end-systems or recognized standards, its operation must be transparent to end-systems; and

b) it must provide interconnection to the widest user community within its scope of operation.

This Technical Report identifies a CO/CL interworking solution which is based on three modes of operation: a network layer relay mode (NLR), a passive transport layer relay (PTLR) mode, and an active transport layer relay (ATLR) mode. Some of these modes of operation lie within the OSI architecture, others lie outside the scope of the OSI architecture. For this reason an International Standard is inappropriate and this form of publication has been chosen.

It is the express intention of the ISO/IEC Subcommittee responsible for this Technical Report (ISO/IEC JTC1/SC6) that the form of publication shall be, and shall remain, a Technical Report. It is the clear intention of SC6 that the content of this Technical Report is not appropriate for conversion into an International Standard.

Copyright International Organization for Standardization
Provided by IHS under license with ISO
No reproduction or networking permitted without license from IHS
Not for Resale

Information technology — Telecommunications and information exchange between systems — Network/Transport Protocol interworking specification

1 Scope

This Technical Report

a) Specifies the circumstances in which Interworking Functional Units may be used to provide the OSI Connection-mode Transport Service end-to-end between two end systems, where

- one of the end systems is accessed using the connection-mode transport protocol as defined in ISO 8073/Add.2[1] in combination with the protocol defined in ISO 8473;
- the other end system is accessed using the connection-mode transport protocol as defined in ISO 8073 in combination with the procedures defined in ISO 8208/ISO 8878[2].

b) Specifies various sets of procedures for the operation of such Interworking Functional Units.

c) Specifies how IFUs which operate more than one of these sets of procedures may choose which set to use in a given instance, taking into account the possibility that some end systems may operate both types of Network Service.

d) Specifies the requirements for IFUs to operate in series and/or in parallel.

NOTE - Only the Network Layer Relay (NLR) mode of operation is within the scope of OSI. The Active Transport Layer Relay (ATLR) and Passive Transport Layer Relay (PTLR) modes of operation are not considered to be OSI operations because ISO 7498 does not define relaying to be a Transport Layer function.

The field of application also covers the case where the two end systems operate the same Network Layer protocol but are interconnected via IFUs employing ATLR or PTLR operation.

2 Normative References

The following standards contain provisions which, through reference in this text, constitute provisions of this Technical Report. At the time of publication, the editions indicated were valid. All standards are subject to revision, and parties to agreements based on this Technical Report are encouraged to investigate the possibility of applying the most recent editions of the standards listed below. Members of IEC and ISO maintain registers of currently valid iInternational Standards.

ISO 7498:1984, *Information processing systems - Open Systems Interconnection - Basic Reference Model.*

---

[1] For purposes of conciseness and distinction, when ISO 8073/Add.2 is used throughout this Technical Report it shall be taken to mean ISO 8073 as modified by ISO 8073/Add.2, i.e. "use of Transport Class Four Operation over Connectionless Network Service".

[2] For purposes of conciseness ISO 8208/ISO 8878 shall be taken to mean ISO 8208 operated in accordance with ISO 8878.

Copyright International Organization for Standardization
Provided by IHS under license with ISO
No reproduction or networking permitted without license from IHS Not for Resale

ISO 7498-3:1986, *Information processing systems - Open Systems Interconnection - Basic Reference Model - Part 3: Naming and Addressing.*

ISO 8072:1986, *Information processing systems - Open Systems Interconnection - Transport Service Definition.*

ISO 8073:1988, *Information processing systems - Open Systems Interconnection - Connection oriented transport protocol specification.*

ISO 8073/Add.1:1988, *Information processing systems - Open Systems Interconnection - Connection oriented transport protocol specification - Addendum 1: Network connection management subprotocol.*

ISO 8073/Add.2:1989, *Information processing systems - Open Systems Interconnection - Connection oriented transport protocol specification - Addendum 2: Class four operation over connectionless network service.*

ISO/IEC 8208:1990, *Information processing systems - Data communications - X.25 Packet Layer Protocol for Data Terminal Equipment.*

ISO 8348/Add.2:1988, *Information processing systems - Data communications - Network service definition - Addendum 2: Network Layer addressing.*

ISO 8473:1988, *Information processing systems - Data communications - Protocol for providing the connectionless-mode network service.*

ISO 8648:1988, *Information processing systems - Open Systems Interconnection - Internal Organization of the Network layer.*

ISO 8878:1987, *Information processing systems - Data communications - Use of X.25 to provide the OSI connection-mode network service.*

ISO/IEC 8881:1989, *Information processing systems - Data communications - Use of X.25 packet level protocol in local area network.*

ISO 9542:1988, *Information processing systems - Telecommunications and information exchange between systems - End system to Intermediate system routeing exchange protocol for use in conjunction with the Protocol for providing the connectionless-mode network service (ISO 8473).*

ISO/IEC 9574:1989, *Information technology - Telecommunications and information exchange between systems - Provision of the OSI connection-mode network service by packet mode terminal equipment connected to an Integrated Services Digital Network (ISDN).*

ISO/IEC TR 9577:1990, *Information technology -Telecommunications and information exchange between systems - Protocol Identification in the network layer.*

ISO/IEC 10028:-[3], *Information processing systems - Data Communications - Definition of the relaying functions of a Network Layer intermediate system.*

ISO/IEC TR 10029:1989, *Information technology - Telecommunications and information exchange between systems - Operation of an X.25 interworking unit.*

---

[3] To be published.

Copyright International Organization for Standardization
Provided by IHS under license with ISO
No reproduction or networking permitted without license from IHS
Not for Resale

ISO/IEC 10177:-[4], *Information technology - Telecommunications and Information Exchange between Systems - Intermediate system support of the OSI connection-mode Network Service using ISO 8208 in accordance with ISO /IEC10028.*

3 Definitions

3.1 Reference Model definitions

This Technical Report makes use of the following concepts defined in ISO 7498:

3.1.1 (N)-layer
3.1.2 (N)-service access point
3.1.3 (N)-address
3.1.4 Routeing
3.1.5 (N)-relay
3.1.6 (N)-protocol data unit
3.1.7 Title
3.1.8 (N)-interface-data-unit

3.2 Network Layer Architecture definitions

This Technical Report makes use of the following concepts from ISO 8648:

3.2.1 Intermediate system

3.2.2 Subnetwork independent convergence protocol

3.3 Additional definitions

For the purposes of this Technical Report, the following definitions apply:

3.3.1 end system: a system in which there is a transport entity providing service to a session entity in an instance of communication.

NOTE - The term end system in ISO 7498 is interpreted to mean a system in which there is a transport entity in an instance of communication. Since ISO 7498 does not permit relaying above the Network layer, this is equivalent to the definition given above. However, this Technical Report discusses relaying at the transport layer; consequently the definition given above is used in order to distinguish end systems from systems relaying at the transport layer.

3.3.2 (N)-SAP Address: (N)-Address

NOTE -The terms (N)-SAP Address and (N)-Address are used synonymously, as in most Network and Transport layer standards.

4 Symbols and abbreviations

ATLR Active Transport Layer Relay

CL Connectionless-mode

[4] To be published.

Copyright International Organization for Standardization
Provided by IHS under license with ISO
No reproduction or networking permitted without license from IHS
Not for Resale

CLNP Connectionless-mode Network Protocol (ISO 8473)

CLNS Connectionless-mode Network Service

CO Connection-mode

CONP Connection-mode Network Protocol (ISO 8208/ISO 8878)

CONS Connection-mode Network Service

COTS Connection-mode Transport Service

ES End system

IFU Interworking Functional Unit

IS Intermediate system

NCMS Network Connection Management Subprotocol

NLI Network Layer Interworking

NLR Network Layer Relay

NPDU Network Protocol Data Unit

NSDU Network Service Data Unit

PDU Protocol Data Unit

PICS Protocol Implementation Conformance Statement

PTLR Passive Transport Layer Relay

QOS Quality of Service

TC Transport Connection

TCLP Transport Connectionless- mode Part

TCOP Transport Connection-mode Part

TLR Transport Layer Relay

TPDU Transport Protocol Data Unit

TSDU Transport Service Data Unit

5 Overview of IFU

5.1 Applicability of IFU

An IFU is applicable only in certain restricted circumstances where CO/CL interworking is necessary to achieve interconnection of two otherwise incompatible end systems. Any other use

Copyright International Organization for Standardization
Provided by IHS under license with ISO
No reproduction or networking permitted without license from IHS Not for Resale

of an IFU is outside the scope of this Technical Report. The restricted circumstances for requirement of an IFU are specified in clause 7 .

5.2 IFU modes of operation

Three modes of operation are identified by means of which an IFU may provide an end-to-end transport service

a) Active Transport Layer Relay (ATLR)

This mode of IFU operation, illustrated in figure 1, provides an end-to-end transport service by operating a separate Transport Connection to each of the connected systems (end systems or other IFUs) and relaying data from one connection to the other. The two connections can be independent, using different transport protocol classes and parameters.

The IFU will preserve the end-to-end transmission of TSDUs, thus in effect providing a single Transport Connection between the two end systems. The IFU does not necessarily preserve the distribution of data between TPDUs, although it may choose to do so, for example to optimise performance, in cases where the classes, options and parameters are sufficiently compatible to make this possible.

b) Passive Transport Layer Relay (PTLR)

This mode of IFU operation, illustrated in figure 2, does not itself operate on the PDUs of transport connections, but passes TPDUs received in NSDUs from each sending system transparently to the receiving peer system. This type of IFU does however, examine TPDUs in order to perform correct Transport to Network Connection assignment.

c) Network Layer Relay (NLR)

In this mode the IFU operation functions as a regular intermediate system.

Connectionless mode (CL) NLR operation shall be in accordance with ISO 8473.

Connection mode (CO) NLR operation shall be in accordance with ISO 10177 (in association with ISO 10028) or ISO TR10029, supporting all the ISO 8208 facilities required for the provision of the connection-mode Network Service.

End systems that require interconnection through an IFU identify each others NSAPs and TSAPs by their Network and Transport addresses, just as they would if connected through a Network Layer relay system. Consequently the IFUs in figures 1 and 2 operate ISO 8073 and ISO 8878 as if the Network and Transport addresses of system B were allocated to service access points in the IFU. Similarly ISO 8073/Add.2 and ISO 8473 operate as if the Network and Transport addresses of system A were allocated to service access points in the IFU.

Copyright International Organization for Standardization
Provided by IHS under license with ISO
No reproduction or networking permitted without license from IHS
Not for Resale

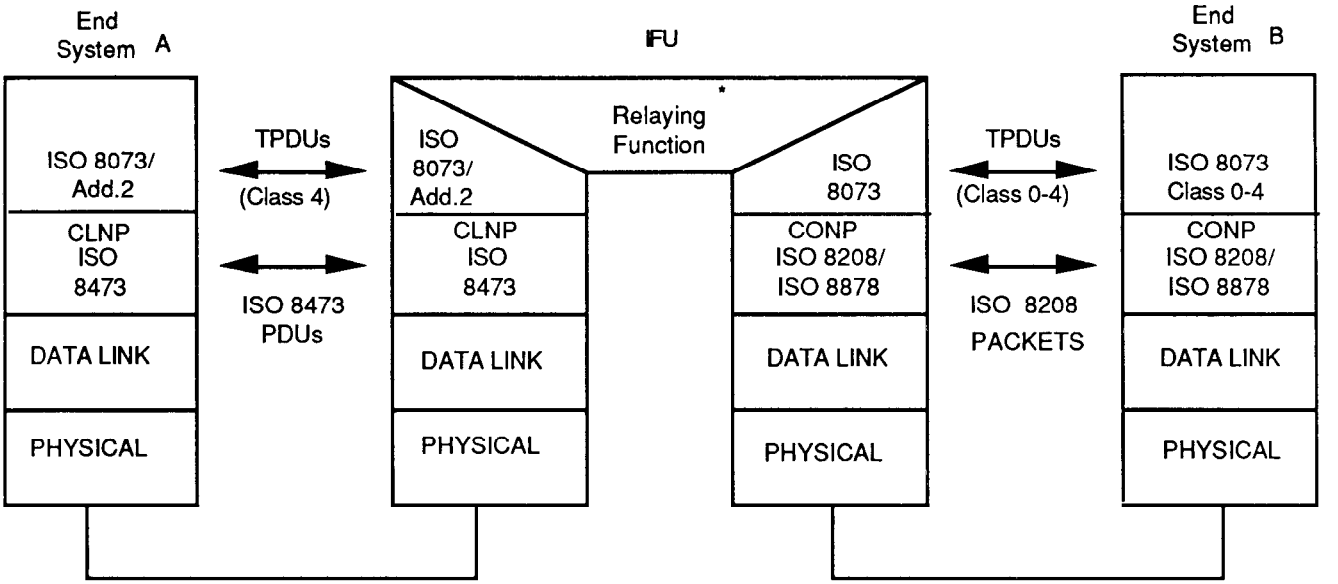

* The difference in the shape of the Relaying Function box is intended to draw attention to the difference in operation between the ATLR and PTLR functions

Figure 1 — An active Transport Relay in an example configuration

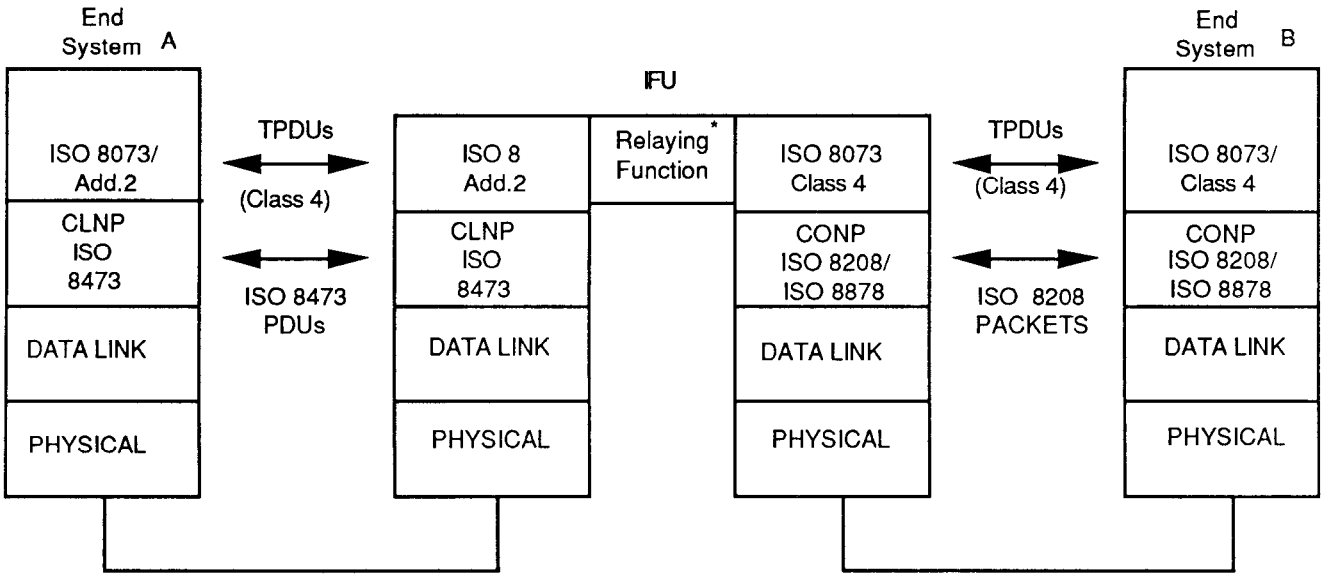

* The difference in the shape of the Relaying Function box is intended to draw attention to the difference in operation betweenthe ATLR and PTLR functions

Figure 2 — A Passive Transport Relay in an example configuration

Copyright International Organization for Standardization
Provided by IHS under license with ISO
No reproduction or networking permitted without license from IHS
Not for Resale

5.3 Selection of a Mode of operation

An IFU which supports more than one mode of operation will dynamically select the appropriate mode of operation on the basis of local knowledge and/or according to responses from the end systems connected to the subnetwork.

In general when an NPDU is received, the IFU may not know a priori whether the destination NSAP is an end system supporting Connectionless or Connection modes of operation, nor for the latter what classes of Transport protocol are supported. If the IFU supports more than one mode of operation, it may ascertain which to use through the procedures defined in clause 10, including the use of Protocol Identification (ISO/IEC TR 9577), and Transport Protocol Class negotiation.

5.4 Provision of Transport Service

The IFU provides a Transport Service between two end systems which would otherwise be unable to interwork owing to incompatible modes of Network Service. In the absence of an IFU, the Network entity in one end system, attempting to establish a connection or transmit a connectionless NSDU to another end system, would be unable to find a route to the destination NSAP. When an IFU is used, suitable routes become available (passing through the IFU).

The protocols used by the end systems are not altered by the presence of the IFU; they continue to operate as if communicating through a normal Network Layer relay. However, the operation of the transport protocol is subject to a number of parameters (for example, in Class 4, the NSDU lifetime and remote acknowledge time etc., or in other classes the connection establishment time (TS1) etc.). The values of these parameters may be dependent on the routes used, the remote system characteristics and the QOS requirements. Just as the existence of any route at all is affected by the presence of the IFU, so the values of these parameters take account of the presence of the IFU.

As in the case of normal operation without an IFU, if the end systems fail to use values of the transport protocol parameters which are appropriate for the circumstances and the (apparent) nature of the remote transport entity, the interconnection of two end systems may not be possible or may result in an unsatisfactory QOS.

5.5 Use of Network Addresses

The use of Network Addresses in an IFU is different from that in end systems; thus the International Standards which specify the behaviour of end systems are modified in this clause to become applicable to an IFU.

The OSI standards require end systems to use Network Addresses allocated in accordance with ISO 8348/Add.2, such that communication between two end systems makes use of Network Addresses allocated to those end systems. The requirement for an IFU is as follows:

a) In all cases where an end system would be required to use a local Network Address - that is, a Network Address allocated to an NSAP in that system itself - the modified requirement which applies to an IFU is that the IFU operates on addresses as if it were a Network Layer Relay, despite having a resident Transport Entity. This operation is specified in 5.5.1.

b) Where an end system would be required to use a Network Address allocated not to itself but to another system (e.g. the system with which it is communicating), that requirement is applicable to IFU operation without modification.

Copyright International Organization for Standardization
Provided by IHS under license with ISO
No reproduction or networking permitted without license from IHS
Not for Resale

5.5.1 Local Network Addresses

In any instance of communication with an end system, the IFU shall use that Network Address with which the end system concerned in this instance of communication is interworking by means of the IFU. That is, when the IFU is enabling provision of the COTS between NSAPs in two end systems, then in each instance of communication with one of the end systems, the IFU makes use of the Network Addresses applicable to the NSAP of the other end system.

5.5.2 Use of ISO 8208 and ISO 8473 NSAP Addresses

When the IFU sends an ISO 8208 Call Accepted packet it conveys the called Network address received in the corresponding ISO 8208 Incoming Call packet as the responding address.

All ISO 8473 PDUs sent by the IFU, as a result of receiving packets in the ISO 8208 virtual circuit, convey in the source address field, the calling network address of the ISO 8208 Incoming Call packet that led to the establishment of the virtual circuit.

When the IFU sends an ISO 8208 Call Request packet, it conveys the source address received in the corresponding ISO 8473 PDUs as the calling Network address. All ISO 8473 PDUs sent by the IFU, as a result of receiving packets on the ISO 8208 virtual circuit established , convey in the source address field the Network address received in the destination address field of the received ISO 8473 PDU that led to the establishment of the ISO 8208 virtual circuit.

6 Conformance

6.1 Static Conformance Requirements

An IFU for which conformance to the provisions of this Technical Report is claimed, shall implement the mandatory function of ATLR operation specified in 8.2.1, 8.3.1, 8.4.1, 8.5.1 and 8.9.1.

6.2 Dynamic Conformance Requirements

All functions supported shall be implemented in accordance with the provisions of 8 for ATLR mode operation. The optional PTLR mode of operation, when implemented, shall be in accordance wih the provisions of clause 9. All IFUs shall operate on NSAP addresses as specified in 5.5.

6.3 Protocol Implementation Conformance Statement

A Protocol Implementation Conformance Statement (PICS) shall be completed in respect of any claim for conformance of an implementation to the provision of this Technical Report. The PICS shall be produced in accordance with the PICS proforma in annex A.

In addition, where the functions implemented are specified in this Technical Report by reference to other International Standards, then where any of those International Standards specifies production of a PICS, that PICS also shall be completed in accordance with the provisions of the standard. In such cases the provisions of this Technical Report may require that the behaviour specified in the referenced International Standard be modified for operation in an IFU. Where this is so, such modifications shall be notified by reference to this Technical Report in items of Exception Information or Supplementary Information in the PICS for the referenced International Standard.

Copyright International Organization for Standardization
Provided by IHS under license with ISO
No reproduction or networking permitted without license from IHS
Not for Resale

7 Environmental requirements for use of an IFU

This clause identifies the environmental requirements or constraints that must be in place before an IFU, as specified in this Technical Report, can be invoked.

NOTE - The use of a CO/CL IFU to support communications between systems employing Network or Transport Layer security mechanisms can only be done in a trusted environment. Any further restrictions/provisions required for an IFU to operate in a secure environment will be subject to a possible amendment to this Technical Reprt.

7.1 Topology and Routeing Requirements

Topology and routeing requirements are those pertaining to a topology which involves the use of two or more IFUs operating in series or in parallel. When only one IFU is available for the interconnection of two end systems these requirements are enforced as a result of the network topology.

The operation of two or more IFUs in series is possible providing that a global addressing scheme is adhered to where the addresses (NSAPs) contained in one Network PDU are not manipulated by an IFU, but remain consistent between end systems.

Because IFUs operate using the Network Addresses of the ESs with which they communicate, it is possible for a single transport protocol machine (in an ES or aTLR) to be simultaneously in communication with two (or more) remote transport protocol machines, both of which use the same Network Address. If this happens, it is necessary that the sets of Transport references used by those remote transport protocol machines are disjoint. Similarly,if a single ISO 8473 protocol machine (in an ES or an IFU or a normal Network Layer relay) is simultaneously in communication (either directly or through ISO 8473 relays) with two (or more) remote protocol machines both of which originate ISO 8473 PDUs, then those remote ISO 8473 protocol machines must use disjoint sets of Data Unit Identifiers.

NOTE - Such simultaneous communication with multiple protocol machines using the same Network Address may occur if there are two or more IFUs operating as TLRs and offering parallel paths to the same destination. They may also occur even whenTLR functions are used in arranged serially, if in addition to a route passing through all the TLR functions there are also routes which bypass some of them. This might happen either because there arre Network Layer relays allowing some of the IFUs to be bypassed, or it might happen if some of the IFUs themselves contain NLR functions which can be used instead of the TLR functions for part of the route.

It follows that if it desired to deploy IFUs in parallel, or if it desired to deploy them in a series in an environment where some of the TLR functions may be bypassed either by internal NLR functions or by external relays, then the IFUs chosen must provide a means whereby their owner(s) can control the number spaces of their ISO 8473 Data Unit Identifiers and of their Transport references so as to avoid clashes.

Where a normal ES operates both CONS and CLNS, the possibility might exist of communicating with it both directly and through a TLR. If such a configuration were set up, the number spaces of the TLR an ES would need to be distinct,which is unreasonable since normal ESs have no reason to restrict their number spaces. However, there should be no need for such a configuration, since if the ES operates both modes, the TLR would not be necessary.

In an environment where the network topology contains multiple IFUs, it is required that any one Transport Connection, for the whole of its lifetime, passes through exactly the same sequence of TLR functions.

Copyright International Organization for Standardization
Provided by IHS under license with ISO
No reproduction or networking permitted without license from IHS
Not for Resale

NOTE - Different NLR functions, whether within IFUs or not, may be used freely according to normal Network Layer routeing decisions.

Since routeing is carried out by the Network Layer, routeing functions are not in general aware of the duration of Transport Connections. Consequently it is recommended that routes should be changed to use a different TLR only if routes through the current TLR are no longer available. However, present studies of routeing operations indicate that this may in general be difficult to achieve, particularly if different TLRs are in different routeing domains; in this case it is recommended that there should be an absolute order of preference between TLRs such that the highest preference available TLR always be used, regardless of the availability of alternatives.

These routeing constraints cannot be enforced by the IFU alone, but are an environmental precondition necessary for the use of IFU. They are enforced by the routeing policies employed by the routeing domains which contain the IFUs.

In the general case of a number of IFUs in different routeing domains, the enforcement of these constraints is a relatively complex matter, though within the capacity of envisaged inter-domain routeing protocols. However, at the other extreme where static preconfigured routeing is used, or where there is only one physical path between the end systems, enforcement is comparatively simple. Additionally, according to ISO 8348/Add.1 Quality of Service constraints may sometimes result in an end system specifying source-routeing details, which may also simplify enforcement of the routeing constraints between the IFU and the end system which is accessed using ISO 8473.

However, in a given practical installation it may be that the routeing constraints described above are satisfied by means of restrictions on the routeing functions carried out by the IFU.

NOTE - Since the IFU may also operate as an Intermediate system in the NLR mode,this Technical Report does not preclude participation of the IFU in Intermediate system functions such as the Intermediate System parts of ISO 9542, or IS-IS routeing protocols.

8 Operation of the Active Transport Layer Relay

8.1 Conceptual Structure of the Active Transport Layer Relay

For the purpose of description, the ATLR is considered as made up of the following parts:

- The Transport Connection-mode Part (TCOP) which operates the connection-mode Transport Protocol (ISO 8073) as defined in 8.4.

- The Transport Connectionless-mode Part (TCLP) which operates the connection-mode Transport Protocol (ISO 8073/Add.2) as defined in 8.5.

- The Network X.25 Part, which operates as defined in 8.2 using ISO 8208/ISO 8878 (X.25).

- The Network Connectionless-mode Part, which operates as defined in 8.3 using the protocol defined in ISO 8473.

- The Transport Relay part, which couples Transport Connections over ISO 8073 to Transport Connections over ISO 8073/Add.2.

The operation of protocols by an IFU is similar in most respects to end system operations. Therefore this Technical Report specifies the behaviour of a IFU by referring to the existing standards which specify the behaviour of end systems, and defines how the behaviour of a IFU differs from those standards.

Copyright International Organization for Standardization
Provided by IHS under license with ISO
No reproduction or networking permitted without license from IHS
Not for Resale

8.2 Function of Network X.25 Part (ISO 8208)

8.2.1 Mandatory functions

The Network X.25 part shall operate the ISO 8208/X.25 packet level protocol conforming to the provisions of ISO 8878, subject to the modification specified in 5.5 concerning the use of Network Addresses.

This Technical Report imposes no constraints on the use of other procedures applicable in conjunction with ISO 8878 in particular environments, such as ISO 9574 and ISO 8881.

8.2.2 Optional Routeing Protocol

The Network X.25 part may optionally also operate the routeing protocol specified in ISO 10030, with the following restriction:

- since the NSAPs on behalf of which the IFU carries out relaying are not present within the IFU, it shall not execute the "Configuration Notification" function, even though it uses these NSAP addresses for ISO 8878 operation as specified in 5.5.

8.3 Function of Network Connectionless-mode Part (ISO 8473)

8.3.1 Mandatory functions

The Network Connectionless-mode part shall operate as an end system conforming to the protocol specification ISO 8473, subject to the modification specified in 5.5 concerning the use of Network Addresses.

8.3.2 Optional Routeing Protocol Operation

8.3.2.1 An IFU operating as an End-System

The Network Connectionless-mode part may optionally also operate the routeing protocol specified in ISO 9542 with the following restriction:

- since the NSAPs on behalf of which the IFU carries out relaying are not present within the IFU, it shall not transmit ESH PDUs in the "Configuration Response" and "Report Configuration " functions, even though it uses these NSAP addresses for ISO 8473 operation as described in 5.5.

In this case, ISO 9542 is used by the IFU only to gain information about the existence and reachability of End-systems and Intermediate Systems on the subnetworks to which it is directly connected. The existence and reachability of the IFU cannot be dynamically discovered by use of ISO 9542.

8.3.2.2 An IFU operating as an Intermediate System

When the IFU contains a Connectionless-mode Network Layer relay function, it may operate the Intermediate systems functions of ISO 9542 and act as if the (CL)NLR part was giving access to the NSAPs on behalf of which the IFU carries out relaying by the use of the Transport Relay function.

Copyright International Organization for Standardization
Provided by IHS under license with ISO
No reproduction or networking permitted without license from IHS
Not for Resale

In this case, the existence and reachability of the IFU can be dynamically discovered by the use of ISO 9542.

8.4 Function of TCOP

8.4.1 Mandatory functions

The Transport Connection-mode part shall operate the connection mode transport protocol as defined in ISO 8073, modified as specified in 5.5, 8.6, 8.7, and 8.8 of this Technical Report. The Transport Relay part shall be the user of the service provided by ISO 8073, which shall be the service defined in ISO 8072 modified as specified in 5.5, 8.6, 8.7, and 8.8 of this Technical Report.

The Transport Connection-mode part is not constrained to consist of one single transport entity. For example, it may be constructed to invoke a different transport entity (and therefore an independent set of transport protocol reference numbers) for each NSAP address which it operates (as calling address when initiating a connection or as called address when receiving a connection) via the Network Connection-Oriented part.

8.4.2 Recommended Use of Acknowledge Time In Class 4

If the TCOP operates Transport Protocol Class 4, it is recommended that it should use the acknowledge time parameter as described in 8.10.

8.4.3 Optional Use of NCMS

NCMS is operated as described in ISO 8073/Add.1, i.e. its use by either the end system or the IFU is optional. Because NCMS cannot be used over CLNS, its operation is not maintained across the overall Transport Connection.

8.5 Function of TCLP

8.5.1 Mandatory functions

The Transport Connectionless-mode part shall operate the connection mode transport protocol as defined in ISO 8073/Add.2, modified as specified in 5.5, 8.6, 8.7 and 8.8 of this Technical Report. The Transport Relay part shall be the user of the service provided by the ISO 8073/Add.2, which shall be the service by ISO 8072 modified as specified in 5.5, 8.6, 8.7, and 8.8 of this Technical Report.

The TCLP is not constrained to consist of one single transport entity. For example, it may be constructed to invoke a different transport entity (and therefore an independent set of transport protocol reference numbers) for each NSAP address which it operates (as source address when issuing an N-UNITDATA request or as destination address when receiving an N-UNITDATA indication) via the Network Connectionless part.

8.5.2 Recommended Use of Acknowledge Time

It is recommended that the TCLP should use the acknowledge time parameter as described in 8.10.

Copyright International Organization for Standardization
Provided by IHS under license with ISO
No reproduction or networking permitted without license from IHS
Not for Resale

8.6 Modified QOS Processing

This subclause specifies the way in which QOS processing in the Transport Connection-mode and Transport Connectionless-mode parts differ from that specified by ISO 8072, ISO 8073, and ISO 8073/Add.2.

The Transport Connection-mode and Transport Connectionless-mode parts shall extract from incoming CR and CC TPDUs the following parameters, where present:

- Residual error rate
- Transit delay

The values of each of these parameters, or an indication of their absence, shall be notified to the Transport Relay part when delivering a T-CONNECT Indication or T-CONNECT Confirm, in addition to the parameters defined for these primitives in ISO 8072.

In T-CONNECT Requests and T-CONNECT Responses, the same parameters (or indications that they are not supplied) shall also be used. The TCOP and TCLP shall insert those parameters which are supplied into the CR or CC TPDUs transmitted as a consequence of the T-CONNECT request or response, except in the case that transport protocol class 0 is used.

Further study is currently being considered on the subject of QOS in the Transport Layer. At present it is unclear how the QOS parameters carried in CR and CC TPDUs should be used. In particular, it is not clear how the responding Transport entity is aware of delays and errors caused by the initiating Transport entity, and therefore how it determines the QOS actually available to its user. Thus the relationship between the QOS requested by the original user and the parameters in the CR TPDU is unknown. For the present it can only be assumed that sufficient a priori knowledge exists in end systems to derive a correct QOS value from the TPDU parameters, and that such a priori knowledge can take into account the effect of an IFU. Hence the parameter values are explicitly passed on unchanged via the IFU. When further study of Transport QOS has been completed, it may become appropriate for the IFU to modify these parameters (or any new parameters introduced to provide similar functions as a result of the study).

8.7 Additional release functions

This subclause defines the way in which the TC Release functions in TCOP and TCLP differ from the corresponding operations specified by ISO 8072, ISO 8073, and ISO 8073/Add.2. It defines additional functionality within the Transport Connection Oriented part and the Transport Connectionless part which is necessary in order to preserve the end-to-end semantics of the "Reason" parameter in T-DISCONNECT indications.

ISO 8072 specifies that a T-DISCONNECT indication contains a reason code which indicates whether the connection was released by the remote TS user or by the provider.

NOTE - Even without an IFU, when Transport Class 0 is used it is not possible to distinguish between provider and user release once the connection has been established. However, the distinction is always possible in the case of connection establishment failure.

The additional functionality is as follows:

The TCOP and TCLP shall accept, accompanying a T-DISCONNECT request, additional information from the Transport Relay parts specifying a reason. This reason shall be either "provider-invoked" or "user-invoked", and in the former case may be of transient or permanent nature. When the value is "user-invoked" the Transport Connection-Oriented or Connectionless

Copyright International Organization for Standardization
Provided by IHS under license with ISO
No reproduction or networking permitted without license from IHS
Not for Resale

parts shall process the T-DISCONNECT request as normal according to the procedures for connection refusal or normal release defined in ISO 8073 and ISO 8073/Add.2.

When the value is "provider invoked", the TCOP or TCLP shall follow the procedures for connection refusal or release with the following exception:

In all cases where the procedure defined in ISO 8073 or ISO 8073/Add.2 requires the transmission of a DR TPDU, the "reason" field of the TPDU shall not be set to 128+0, as would normally be the case when processing a T-DISCONNECT request. Instead, another value shall be used. This value may be 2 where the reason indicated is of a permanent nature, or 0 where it is transient. Alternatively, the value may be a more informative value which preserves the permanent/transient significance, selected from those permitted in ISO 8073 and ISO 8073/Add.2 on the basis of local knowledge obtained from internal cooperation with the other parts of the IFU.

Annex B indicates how the selection of a suitable value may be made when sufficient local knowledge is available.

8.8 Use of TSAP-ID Values

This subclause specifies how the use and significance of TSAP-ID parameters, as specified for an end system by ISO 8073 in conjunction with ISO 8073/Add.2 and ISO 8072, is modified for use in an IFU.

As described in 5.2, the IFU operates as if Transport addresses used by the end systems to which it is relaying the Transport Service were assigned to access points in the IFU. Thus the use of addresses differs from that in an end system, in that where an end system would use an address allocated to itself, the IFU uses an address allocated to another system. Therefore in providing an end-to-end transport service by relaying between two end systems, the IFU shall use TSAP-ID values as follows

> in any instance of communication with either of the end systems, the IFU shall use as its TSAP-ID value the same value as is used by the other end system in the associated transport connection over which the relaying is performed.

8.9 Function of Transport Connection Mapping

This clause describes the process of relaying the transport service operations between the TCOP and the TCLP through the Transport Relay part. For description convenience the Transport Relay part is considered to be purely a coupling function between the TCOP and TCLP, such that indications and confirmations from the TCOP become mapped onto requests and responses to the TCLP and vice versa. Thus the Transport Relay is not considered as a separate operation with the potential of introducing delays or data errors etc. Any limitations on QOS or concurrency within the IFU are attributed to either the TCOP or the TCLP and handled according to normal transport entity operation.

Further information on local coordination between TCs in an ATLR is given in annex B.

8.9.1 Mandatory functions

A T-CR coming in via the TCLP is delivered (subject to resource constraints and acceptability and ability to provide the relevant QOS), as a T-CONNECT indication to the Transport Relay. The Transport Relay maps onto a corresponding T-CONNECT request to the TCOP, with all the parameters the same as those in the T-CONNECT indication.

Copyright International Organization for Standardization
Provided by IHS under license with ISO
No reproduction or networking permitted without license from IHS
Not for Resale

The called and calling address parameters determine the TSAP-IDs which the TCOP uses and the NSAP address which it specifies to the Network X.25 part.

If this connection made through the TCOP is accepted, the TCOP delivers a T-CONNECT confirm to the Transport Relay, which maps this onto a corresponding T-CONNECT response to the TCLP with all the parameters the same as those in the T-CONNECT confirm.

Similarly connections are established in the reverse direction, where the initial T-CONNECT indication is received from the TCOP and the Transport Relay consequently initiates connection establishment through the TCLP, and eventually issues the T-CONNECT response primitive to the TCOP.

Data transfer may then take place; the Transport Relay receives T-DATA and T-EXPEDITED DATA indications from the TCOP and passes on the data in the form of corresponding T-DATA and T-EXPEDITED DATA requests to the TCLP, and vice versa. If indications are received by the Transport Relay in the form of a number of Transport Interface Data Units, it may process and pass on individual units without waiting for the delivery of the whole TSDU.

When the Transport Relay receives a T-DISCONNECT indication from the TCOP or the TCLP, it maps this onto a T-DISCONNECT request on the associated TC to the other part. In this T-DISCONNECT request the additional information described in 8.10 is set to indicate "user-invoked" or "provider-invoked" and transient or permanent, according to the value in the "reason" parameter in the T-DISCONNECT indication. The User Data specified in the T-DISCONNECT request is the same as that in the T-DISCONNECT indication.

As noted in ISO 8072, a local mechanism is used to make it possible to distinguish between several TCs at a TSAP. It is also a local matter whether the mechanism used for this purpose by the TCOP is the same as that used by the TCLP, or whether the Transport Relay has to maintain records to enable it to correctly identify which TCs are to be mapped to each other.

As described in this subclause, all those aspects of the transport connection whose end-to-end significance has to be preserved are passed on by the Transport Relay. But since the division of the IFU into parts is only a descriptive technique, in a practical implementation the TCOP and TCLP may be able to make use of a good deal of local knowledge of what the other parts are doing.

8.10 Recommended use of acknowledgement time in Class 4

When the TCOP or TCLP is using transport protocol class 4, it is recommended to transmit the maximum acknowledgement time in the acknowledge time parameter of CR and CC TPDUs, specifying the largest acknowledgement time which will be applicable after completion of the connection establishment process.

As described in 5.4, the end systems will allow for a large acknowledgement time when operating through an IFU, to allow the IFU to interact with the remote system before responding. However, once the connection is established, a IFU may not need to interact with the remote end system before responding, unless it is correlating its acknowledgements with those of the remote system by making use of local knowledge of the associated transport connection in the other part of the IFU as described in annex B. Thus by conveying whatever its acknowledgement time will actually be for the rest of the connection (after completion of the necessarily end-to-end connection establishment process), the IFU may enable the end system to revise the parameters of its transport protocol operation, using values more appropriate for the remainder of the connection.

Copyright International Organization for Standardization
Provided by IHS under license with ISO
No reproduction or networking permitted without license from IHS
Not for Resale

8.11 TPDU size

It is likely that an IFU will operate at a boundary between two networks that have very different architectures i.e. a LAN/WAN boundary. In such a situation the speed and data unit size of the networks has to converge at the IFU, making it necessary for the IFU to resolve these differences in order to provide interworking of the end systems. The configuration of an IFU will have to account for this type of environment by ensuring that enough resources are available to provide a level of service which is satisfactory to both types of networks.

9 Operation of the Passive Transport Layer Relay

The principle of the operation of PTLR mode is that TPDUs received from an ES which used one mode of service is forwarded with minimal change to the ES which uses the other mode of service, without the IFU intervening in the detailed operation of the transport protocol. This is only possible when both ESs are using transport protocol class 4. There are cases where it is necessary to make some modifications to TPDUs before forwarding them, as specified below.

9.1 Conceptual structure of Passive Transport Layer Relay

For the purpose of the description, the PTLR operation is considered as made up of the following parts:

a) The Network X.25 part, which operates as defined in 9.2 using ISO 8208/ISO 8878.

b) The Network Connectionless part, which operates as defined in 9.3 using the protocol defined in ISO 8473.

c) The Transport Relay part, which maps between TPDUs transferred via the Network X.25 part and TPDUs transferred via the Network Connectionless-mode part.

9.2 Function of Network X.25 Part

9.2.1 Mandatory functions

The Network X.25 part shall operate the ISO 8208(X.25) packet level protocol conforming to the provisions of ISO 8878, subject to the modifications specified in 5.5, 9.4 and 9.5 of this Technical Report. The Transport Relay part shall be the user of the service provided by the Network X.25 part, which shall be the connection mode service defined in ISO 8348 modified as specified in 5.5. This Technical Report imposes no constraints on the use of other procedures applicable in conjunction with ISO 8878 in particular environments, such as ISO 9574 and ISO 8881.

9.2.2 Optional routeing protocol

The Network X.25 part may optionally also operate the routeing protocol specified in ISO 10030, with the following restriction:

- since the NSAPs on behalf of which the IFU carried out relaying are not present within the IFU, it shall not execute the "Configuration Notification" function, even though it uses these NSAP addresses for ISO 8878 operation as described in 5.5.

Copyright International Organization for Standardization
Provided by IHS under license with ISO
No reproduction or networking permitted without license from IHS
Not for Resale

9.3 Function of Network Connectionless part

9.3.1 Mandatory functions

The Network Connectionless part shall operate as an ES conforming to the protocol specification ISO 8473, subject to the modifications in 5.5, and 9.5 of this Technical Report.

The Transport Relay part shall be the user of the service provided by the Network Connectionless -mode part, which shall be the connectionless mode service specified in ISO 8348/Add.1 subject to the modifications specified in 5.5 of this Technical Report.

9.3.2 Optional Routeing protocol operation

9.3.2.1 An IFU operating as an End system

The Network Connectionless-mode part may optionally also operate the routeing protocol specified in ISO 9542 with the following restriction:

- since the NSAPs on behalf of which the IFU carries out relaying are not present within the IFU, it shall not transmit ESH PDUs in the ISO 9542 "Configuration Response" and "Report Configuration" functions, even though it uses the NSAP addresses for ISO 8473 operation as specified in 5.5.

In this case, ISO 9542 is used by the IFU only to gain information about the existence and reachability of End sytems and Intermediate Systems on the subnetworks to which it is directly connected. The existence and reachability of the IFU cannot be dynamically discovered by the use of ISO 9542.

9.3.2.2 An IFU operating as an Intermediate System

When the IFU contains a connectionless-mode Network Layer relay, it may operate the Intermediate Systems functions of ISO 9542 and act as if the CL(NLR) part was giving access to the NSAPs on behalf of which the IFU carries out relaying by the use of the Transport Relay function.

In this case, the existence and reachability of the IFU can be dynamically discovered by the use of ISO 9542.

9.4 Modified QOS Negotiation

This subclause specifies the way in which the QOS negotiation in the Network X.25 part differs from that specified for an End System in ISO 8878.

ISO 8878 specifies how the transit delay attributable to the NS provider in the system is used during the negotiation of transit delay. In PTLR operation, instead of using the transit delay attributable to the Network X.25 part, the transit delay figure used shall be the sum of:

a) The transit delay attributable to the Network X.25 part;

b) The transit delay attributable to the Transport Relay part;

c) The transit delay attributable to the connectionless-mode transmissions needed for communication with the CL ES.

Copyright International Organization for Standardization
Provided by IHS under license with ISO
No reproduction or networking permitted without license from IHS
Not for Resale

9.5 Extended lifetime processing

This subclause specifies a function to be performed by the PTLR acting on the lifetime field of ISO 8473 NPDUs, in addition to the functions applicable to ESs specified in ISO 8473.

The lifetime field of received ISO 8473 Network PDUs shall be used to derive a limit on the time taken for the process of forwarding via the X.25 part the TPDUs obtained from them. The limit is obtained by subtracting the transit delay on the relevant X.25 connection from the lifetime values in received ISO 8473 fragments making up the NSDU from which the TPDU to be forwarded was obtained. If the limit derived in this way from any fragment expires before the start of transmission of the TPDU by the Network X.25 part in an X.25 packet sequence, the TPDU shall not be transmitted but shall be discarded.

9.6 Function of Transport relay part

9.6.1 Mandatory functions

9.6.1.1 Incoming X.25 connection requests

On receiving an N-CONNECT indication primitive from the Network X.25 part the PTLR shall, if the connection is acceptable, issue an N-CONNECT response in which the selected QOS values for throughput, priority and protection are not greater than the highest values available within the Transport relay part and available in transmission via the Network Connectionless part to and from the called Network address which was identified in the N-CONNECTindication.

9.6.1.2 Initiating X.25 connections

The PTLR shall initiate a new connection by means of an N-CONNECT request to the Network X.25 part when it is necessary, according to the procedures specified in the remainder of 9.6, to forward a TPDU to a CO ES, if either:

a) there is no existing X.25 connection to which the relevant TC is or can be assigned

b) it is necessary to use a new X.25 connection in order to maintain the negotiated transport QOS.

9.6.1.3 Processing of NSDUs

On receipt of an NSDU, the PTLR shall carry out as specified in ISO 8073 the functions of "separation" and "association of TPDUs to transport connections", and shall perform checksum checking. It shall then process the resulting TPDUs as specified below.

9.6.1.4 Processing of CR TPDUs

On receipt of an acceptable valid CR TPDU from the Network X.25 part which is not associated with an existing TC, the PTLR shall forward it via the Network Connectionless part to the CL ES having performed the following modifications

a) The source reference shall be altered if necessary so as to use one which is not currently in use between the two Network Addresses concerned and is not frozen, and which is within any limitations which the implementation imposes on the range of reference numbers it will use. The reference number need not be modified if it already satisfies these conditions, though even then the PTLR may still choose to modify it for local convenience.

Copyright International Organization for Standardization
Provided by IHS under license with ISO
No reproduction or networking permitted without license from IHS
Not for Resale

b) The QOS requested shall be modified so as not to exceed that which the PTLR function can achieve.

c) The checksum shall be modified by the amount necessary to account for any changes made according to a) and b) above.

Similarly an acceptable valid CR TPDU from the Network Connectionless part shall be forwarded to the CO ES via the Network X.25 part, after carrying out the same modifications.

If a CR is received which can be associated with a Transport Connection, then the CR previously sent on that TC shall be re-transmitted. If there was no such previous CR because the Transport Connection was originally established in the reverse direction, the received CR shall be forwarded unchanged.

9.6.1.5 Processing of CC TPDUs

On receipt of a valid CC TPDU the PTLR shall note the negotiated QOS for use in determining when and how the open further Network connections to which to assign the transport connection. It shall modify the source reference if necessary as described in the case of 9.6.1.4, modify the destination reference to reflect that used as source reference in the CR TPDU, and update any checksum accordingly.

9.6.1.6 Processing of other TPDUs

Any TPDU received other than a CR or CC shall be forwarded to the other ES, after changing the references (if necessary) to those selected during connection establishment and modifying any checksum accordingly.

9.7 Concurrent use of PTLR and ATLR mode between one pair of Network Addresses

An IFU may choose to operate some transport connections between a given pair of Network Addresses using ATLR mode and other connections between the same pair of Network Addresses using PTLR mode.

In this case, incoming NSDUs may contain a mixture of TPDUs for both modes. Consequently the IS 8073 procedures of separation and association with transport connections, and the checking of checksums, which occur in both modes, are in this case carried out prior to determining, for each TPDU, the applicable mode which determines the remainder of the processing required.

An IFU which is prepared to operate either mode between a given pair of Network Addresses may dynamically determine which mode to use for each transport connection; clause 10 of this Technical Report describes a method which may be used to select the most appropriate mode to use. In this case, the negotiation of Network and Transport QOS may be partially or completely carried out before the eventual mode of operation has been determined. These negotiations need to be carried out according to the provisions of 9.4 and 9.6 in order that PTLR mode may operate correctly in the event that it is eventually selected. In this case if the eventual decision is to use ATLR mode, it may be that the QOS selected is different from that which would have resulted had the normal procedures of ATLR mode been followed from the start.

9.8 Use of NCMS

NCMS is operated as described in ISO8073/Add.1, i.e. its use by either the end system or the IFU is optional. Because NCMS cannot be used over CLNS, its operation is not maintained across the overall Transport Connection.

Copyright International Organization for Standardization
Provided by IHS under license with ISO
No reproduction or networking permitted without license from IHS
Not for Resale

10 Selection of IFU mode of operation

The IFU may be able to operate a PTLR, or a Network layer relay, in addition to the mandatory ATLR operation. This clause describes an algorithm which may be used for selecting the most appropriate function from those available.

10.1 Mode selection for incoming ISO 8473 PDUs

This function may be executed by an IFU which receives a connectionless-mode NPDU.

Step 1

Step 1 is applicable only to IFUs which contain a CLNS relaying function.

a) If there is a route available to the destination without changing service type, then the relay function may be operated normally by any of the relevant techniques specified in the documents referenced in 5.2.c).

b) If it is not known whether there is a route available using CLNS, but a destination SNPA is known to which an X.25 connection may be established, then the IFU may attempt to determine whether this can be used for relaying CLNS, by trying to establish a virtual circuit in accordance with ISO 8473. If this is successful, then relaying may be operated by any of the relevant techniques specified in 5.2.c).

NOTE - There may exist some ESs or ISs which, although they do not operate ISO 8473 will accept a virtual call set up according to the ISO 8473 procedures. The above procedure does not work with such systems, and therefore an IFU which contains a CLNS relay function can only be used with them if it has information to indicate when CLNS relaying is required.

Step 2

If step 1 is not carried out, or does not result in operation of connectionless-mode relaying, then step 2 is applicable provided that the IFU is prepared to operate both the ATLR and PTLR function for the pair of NSAPs. (Otherwise it shall proceed to carry out the ATLR function).

a) The IFU shall operate ISO 8473 as if the destination of the incoming PDU had been reached. Once it has assembled a whole NSDU, it shall apply the function of association of TPDUs with transport connections as specified in ISO 8073/Add.2. Those TPDUs which emerge associated with an existing connection shall be treated according to procedure applicable to that connection.

b) If a CR TPDU is found for which a new transport connection is to be created, the IFU may decide which mode of TLR operation is most appropriate for the connection (e.g. on the basis of the QOS requirements for the source/destination address pair). If so it shall proceed to carry out that operation. Otherwise it shall establish a network connection suitable for use with the PTLR function, but operate the ATLR function until the connection is accepted by the CO system.

c) When the connection is accepted and the negotiated transport class is not class 4, the IFU shall continue to operate the ATLR function. Otherwise it may change the PTLR function for the remainder of the connection.

Copyright International Organization for Standardization
Provided by IHS under license with ISO
No reproduction or networking permitted without license from IHS
Not for Resale

10.2 Mode Selection for Incoming Network Connections

This function may be executed by an IFU which receives a Network connection attempt.

Step 1

Step 1 is applicable only to IFUs which contain a CONS relaying function.

a) If there is a route available to the destination without changing service type, then a relay function may be operated normally by any of the relevant techniques specified in 5.2.c).

b) If it is not known whether there is a route available using CONS, but a destination SNPA is available to which an X.25 connection can be established, then the IFU may attempt to determine whether this can be used for relaying CONS, by trying to establish a virtual circuit in accordance with the relevant techniques specified in 5.2.c). If this is successful then relaying may be operated without changing service type.

NOTE - Although ISO 8473 specifies a method of identifying itself in X.25 call user data, it does not specify what a system operating ISO 8473 only should do if it receives a call without the correct identification. So there may exist some systems which would accept such a call even though they operate only ISO 8473 over ISO 8208. The above procedure does not work with such systems, and therefore an IFU containing a connection-mode relay function can only be used with such systems if it has routeing information or other knowledge to indicate when connection-mode relaying is required.

Step 2

If step 1 is not carried out, or does not result in operation of connection-mode relaying, then step 2 is applicable provided the IFU is prepared to operate both the ATLR and the PTLR function for the pair of NSAPs (otherwise it shall proceed to carry out the ATLR function).

a) The IFU shall accept the connection as if it were going to use PTLR mode (see 9.6.1.1), and shall proceed to operate according to ISO 8878. When NSDUs are received on the connection, it shall apply the function of association of TPDUs with transport connections as specified in ISO 8073. Those TPDUs which emerge associated with an existing connection shall be treated according to the ATLR or PTLR procedure applicable to that connection.

b) If a CR TPDU is found for which a new transport connection is to be created, and the requested transport class is not class 4 the IFU shall proceed to operate the new transport connection in ATLR mode. If the requested class is class 4, then the IFU may either choose immediately whether to operate in ATLR or PTLR mode, or may proceed initially in ATLR mode and subsequently decide whether to switch to PTLR mode on receiving the CC TPDU.

Copyright International Organization for Standardization
Provided by IHS under license with ISO
No reproduction or networking permitted without license from IHS
Not for Resale

ANNEX A
(normative)

PICS proforma

A.1 Introduction

The supplier of an implementation which is claimed to conform to the provisions of this Technical Report shall complete the Protocol Implementation Conformance Statement (PICS) proforma following, and accompany it by the information necessary to identify fully both the supplier and the implementation.

A.2 Abbreviations and symbols

N/A	Not Applicable
M	Mandatory
O	Optional
P	Prohibited
n:	the status following this symbol only when the PICS item "n" is supported.

A.3 Instructions for completing the PICS proforma

The main part of the PICS proforma is a fixed-format questionnaire. A supplier may also provide, or be required to provide, additional information, categorized as either Exception Information or Supplementary Information. When present, each kind of additional information is to be provided as items labelled respectively X.<i> or S.<i> for cross-referencing purposes, where <i> is any unambiguous identification for the item (e.g. simply by a number). There are no other restrictions on its format and presentation.

A completed PICS proforma is the Protocol Implementation Conformance statement for the implementation in question.

Answers to the questionnaire are to be provided in the rightmost column, either by simply marking an answer to indicate a restricted choice (such as Yes or No), or by entering a value or a set or range of values.

Items of Exception Information are required by certain answers in this questionnaire. This is indicated by an "X:_" cross-reference to be completed. This occurs when, for example, an answer indicates that a feature classified as Mandatory has not been implemented. The Exception item should contain the appropriate rationale.

The final section of the PICS, for Supplementary Information, allows a supplier to provide additional information intended to assist the interpretation of the PICS. It is not intended or expected that a large quantity will be supplied, and a PICS may be considered complete without any such information. An example might be an outline of the ways in which a (single) implementation can be set up to operate in a variety of environments and configurations.

References to items of Supplementary Information may be entered next to any answer in the questionnaire, and may be included in items of Exception Information.

Copyright International Organization for Standardization
Provided by IHS under license with ISO
No reproduction or networking permitted without license from IHS
Not for Resale

PICS PROFORMA FOR ISO/IEC TR 10172

ITEM	FEATURE NO:	CLAUSE	STATUS	SUPPORT		
1	ALTR OPERATION	8	M		YES☐	
2	PTLR OPERATION	9	O		YES☐	NO☐
3	CL NLR OPERATION	5.2C)	O		YES☐	NO☐
4	CO NLR OPERATION	5.2C)	O		YES☐	NO☐
5	ATLR NETWORK X.25 PART	8.2.1	M		YES☐	
6	ATLR X.25 OPTIONAL ROUTEING	8.2.2	5:O		YES☐	NO☐
7	ATLR CONNECTIONLESS PART	8.3.1	M		YES☐	
8	ATLR CL OPTIONAL ROUTEING AS AN ES	8.3.2.1	O		YES☐	NO☐
9	ATLR OR OPTIONAL ROUTEING AS AN IS	8.3.2.2	3:O		YES☐	NO☐
10	PTLR X.25 PART	9.2.1	2:M	N/A☐	YES☐	NO☐
11	PTLR X.25 OPTIONAL ROUTEING	9.2.2	9:O	N/A☐	YES☐	NO☐
12	PTLR CONNECTIONLESS PART	9.3.1	2:M	N/A☐	YES☐	NO☐
13	PTLR CL OPTIONAL ROUTEING AS AN ES	9.3.2.1	2:O		YES☐	NO☐
14	PTLR OR OPTIONAL ROUTEING AS AN IS	9.3.2.2	2/3:O		YES☐	NO☐
15	TCOP	8.4.1	M		YES☐	
16	TCLP	8.5.1	M		YES☐	
17	MODIFIED Q OF S PROCESSING	8.6	M		YES☐	
18	ADDITIONAL RELEASE FUNCTIONS	8.7	M		YES☐	
19	TC MAPPING	8.9	M		YES☐	
20	MODIFIED Q OF S NEGOTIATION	9.4	2:M		YES☐	
21	EXTENDED LIFETIME PROCESSING	9.5	2:M	N/A☐	YES☐	NO☐
22	TRANSPORT RELAY PART	9.6	2:M	N/A☐	YES☐	NO☐
23	CONCURRENT USE OF PTLR & ATLR	9.7	O		YES☐	NO☐
24	CL SELECTION STEP 1	10.1	3:O	N/A☐	YES☐	NO☐
25	CL SELECTION STEP 2	10.1	2:O	N/A☐	YES☐	NO☐
26	CO SELECTION STEP 1	10.2	4:O	N/A☐	YES☐	NO☐
27	CO SELECTION STEP 2	10.2	2:O	N/A☐	YES☐	NO☐

Copyright International Organization for Standardization
Provided by IHS under license with ISO
No reproduction or networking permitted without license from IHS
Not for Resale

ITEM	FEATURE	CLAUSE	TYPE AND RANGE	
			TYPE	RANGE
P1	Acknowledgement time	8.10		
P2	What range/limits can be imposed on Transport protocol reference numbers?	7.1		
P3	What range/limits can be imposed on ISO 8473 PDU Data Unit Identifiers?	7.1		

Copyright International Organization for Standardization
Provided by IHS under license with ISO
No reproduction or networking permitted without license from IHS
Not for Resale

ANNEX B
(informative)

Local coordination between TCs in an ATLR

B.1 General application of local coordination

As indicated in clause 8, the functions operating a TC over ISO 8208/ISO 8878 in an ATLR may have local knowledge relating to the operation of the corresponding TC operating over ISO 8473 and vice versa. In this way, those operations which are a matter for local decision in an implementation of the Transport Protocol (and which are not restricted by the provisions of clause 8), such as the amount of credit to grant, the size of TPDUs, etc., may if desired be coordinated between the two transport connections. For example, the credit granted on one TC might be maintained equal to that made available by the remote End-System on the other TC, which might simplify buffer management within the ATLR (it would give an appearance of end-to-end flow control). In an extreme case, the forwarding of TSDUs may be so closely coordinated that the data in each incoming TPDU is processed and forwarded as a unit, and without waiting for the arrival of the remainder of TSDU. If references are coordinated and both TCs use Class 4, it may even be possible to avoid re-calculating the checksum. (The method used to determine the checksum is not constrained by ISO 8073, in this case it would have been determined by remembering the checksum applicable to that particular TPDU content from the time when it was discovered to be correct in an incoming TPDU in another part of the system.).

It is emphasized, however, that such coordination is possible only within the degree of local freedom permitted by the transport protocol specification. For example, if it were decided to coordinate acknowledgements, so that an acknowledgement was transmitted on one TC only when the data being acknowledged had already been forwarded to the remote end system and acknowledged by it on the other TC, this would be constrained in Class 4 by the requirement to stay within the bound of the local acknowledge time. (It might well be, of course, that the value of the local acknowledge time was determined taking account of the expectation of this method of working and the probable delay, but nevertheless in the event of the incoming acknowledgement being late the TCLP or TCOP implementing class 4 would be obliged by the provisions of ISO 8073 and ISO 8073/Add.2 to transmit an acknowledgement regardless).

B.2 Use of disconnect reasons

As indicated in clause 8, a case in which local coordination within a ATLR may be particularly useful is in the use of transport protocol disconnect reasons.

Where sufficient local knowledge is available, if the disconnect reason code on one transport protocol connection is 9, 1, 2 or 3, it is appropriate to use the same reason code on the other transport protocol connection. The same should be done with codes 128+1 and 128+7 except in the case of class 0 when the value 0 should be used. Code 128+2 on the ISO 8208/ISO 8878 connection could be mapped to code 2 on the ISO 8473 connection (not very close in meaning but does indicate a persistent condition). Other reason codes should result in 0 being used on the other connection.

It is recommended that the additional information parameter of the DR TPDU is used to indicate the disconnect reason code on the other connection. However, if the original disconnection was originated by the end system and itself included an additional information parameter which is available by local knowledge, it is preferable to give priority to transmission of that original additional information and to add an indication of the original disconnect reason to the end if there is room.

Copyright International Organization for Standardization
Provided by IHS under license with ISO
No reproduction or networking permitted without license from IHS
Not for Resale

UDC 681.3:621.39

Descriptors: data processing, information interchange, network interconnection, open systems interconnection, data transmission, telecommunications, network layer, transport layer, communication procedure, protocols.

Price based on 25 pages

--`,,```,,,,````-`-`,,`,,`,`,,`---

Copyright International Organization for Standardization
Provided by IHS under license with ISO
No reproduction or networking permitted without license from IHS

Not for Resale