INTERNATIONAL STANDARDIZED PROFILE

ISO/IEC ISP 15121-3

First edition
1997-12-15

Information technology — International Standardized Profile AOD1n — Interactive Manipulation of ODA Documents —

Part 3:
AOD13 — DTAM/Manipulation

Technologies de l'information — Profil normalisé international AOD1n — Manipulation interactive de documents ODA —

Partie 3: AOD13 — DTAM/Manipulation

Reference number
ISO/IEC ISP 15121-3:1997(E)

Copyright International Organization for Standardization
Provided by IHS under license with ISO
No reproduction or networking permitted without license from IHS

Not for Resale

Contents

Foreword vi

Introduction vii

1 Scope 1

1.1 General 1

1.2 Position within the Taxonomy 1

1.3 User Requirements and Scenario 1

1.3.1 Asymmetric document applications 1

1.3.2 Symmetric document applications 2

2 Normative References 3

2.1 Identical Recommendations | International Standards 4

2.2 Additional References 4

3 Definitions 4

4 Abbreviations 4

5 Conformance 4

6 Constraints for the Abstract Interface for the manipulation of ODA documents and for DTAM confirmed document manipulation service 4

6.1 Support for services provided by AOD13 (Interactive Manipulation of ODA Documents - DTAM/Insert) 4

6.1.1 'Support for services provided by AOD13' tables conventions 4

6.1.2 Abstract interface for the manipulation of ODA documents 5

6.1.3 DTAM confirmed document manipulation 5

6.1.4 'Equivalence between AI and DTAM-DM services' table conventions 6

6.1.5 Equivalence between AI and DTAM-DM services 6

© ISO/IEC 1997

All rights reserved. Unless otherwise specified, no part of this publication may be reproduced or utilized in any form or by any means, electronic or mechanical, including photocopying and microfilm, without permission in writing from the publisher.

ISO/IEC Copyright Office • Case postale 56 • CH-1211 Genève 20 • Switzerland

Printed in Switzerland

Copyright International Organization for Standardization
Provided by IHS under license with ISO
No reproduction or networking permitted without license from IHS

Not for Resale

6.2 Support for AI and DTAM-DM operation arguments and results 7
6.2.1 'Support for AI and DTAM-DM operation arguments and results' tables conventions .. 7
6.2.2 Equivalence between AI and DTAM-DM arguments and results 7
6.2.3 General Restrictions 7
6.2.4 AI List / DTAM-DM DM-DOCUMENT-LIST 7
6.2.5 AI Open / DTAM-DM DM-DOCUMENT-OPEN 7
6.2.6 AI Close / DTAM-DM DM-DOCUMENT-CLOSE 7
6.2.7 AI Get / DTAM-DM DM-GET 7
6.2.8 AI Search / DTAM-DM DM-SEARCH 8
6.2.9 AI Create / DTAM-DM DM-CREATE 8
6.2.10 AI Delete / DTAM-DM DM-DELETE 8
6.2.10.1 General restrictions 8
6.2.10.2 AI Delete arguments 8
6.2.10.3 DTAM-DM DM-DELETE arguments 8
6.2.10.4 Equivalence between AI Delete and DTAM-DM DM-DELETE arguments 9
6.2.10.5 AI Delete results 10
6.2.10.6 DTAM-DM DM-DELETE results 10
6.2.10.7 Equivalence between AI Delete and DTAM-DM DM-DELETE results 10
6.2.11 AI Modify / DTAM-DM DM-MODIFY 10
6.2.11.1 General restrictions 10
6.2.11.2 AI Modify arguments 10
6.2.11.3 DTAM-DM DM-MODIFY arguments 11
6.2.11.4 Equivalence between AI Modify and DTAM-DM DM-MODIFY arguments 13
6.2.11.5 AI Modify results 13
6.2.11.6 DTAM-DM DM-MODIFY results 13
6.2.11.7 Equivalence between AI Modify and DTAM-DM DM-MODIFY results .. 13
6.2.12 AI Replace / DTAM-DM DM-REPLACE 13
6.2.12.1 General restrictions 13
6.2.12.2 AI Replace arguments 14
6.2.12.3 DTAM-DM DM-REPLACE arguments 14
6.2.12.4 Equivalence between AI Replace and DTAM-DM DM-REPLACE arguments 15
6.2.12.5 AI Replace results 16
6.2.12.6 DTAM-DM DM-REPLACE results 16
6.2.12.7 Equivalence between AI Replace and DTAM-DM DM-REPLACE results 16
6.2.13 AI Copy / DTAM-DM DM-COPY 16
6.2.14 AI Move / DTAM-DM DM-MOVE 16
6.2.14.1 General restrictions 16
6.2.14.2 AI Move arguments 16
6.2.14.3 DTAM-DM DM-MOVE arguments 17
6.2.14.4 Equivalence between AI Move and DTAM-DM DM-MOVE arguments ... 20
6.2.14.5 AI Move results 20
6.2.14.6 DTAM-DM DM-MOVE results 21
6.2.14.7 Equivalence between AI Move and DTAM-DM DM-MOVE results 21

Copyright International Organization for Standardization
Provided by IHS under license with ISO
No reproduction or networking permitted without license from IHS
Not for Resale

6.2.15 AI Reserve / DTAM-DM DM-RESERVE 22
6.2.16 AI Unreserve / DTAM-DM DM-UNRESERVE 22
6.2.17 AI BeginGroup / DTAM-DM DM-GROUP-BEGIN 22
6.2.17.1 General restrictions 22
6.2.17.2 AI BeginGroup arguments 22
6.2.17.3 DTAM-DM DM-GROUP-BEGIN arguments 22
6.2.17.4 Equivalence between AI BeginGroup and DTAM-DM DM-GROUP-BEGIN arguments 22
6.2.17.5 AI BeginGroup results 23
6.2.17.6 DTAM-DM DM-GROUP-BEGIN results 23
6.2.17.7 Equivalence between AI BeginGroup and DTAM-DM DM-GROUP-BEGIN results 23
6.2.18 AI EndGroup / DTAM-DM DM-GROUP-END 23
6.2.18.1 General restrictions 23
6.2.18.2 AI EndGroup arguments 23
6.2.18.3 DTAM-DM DM-GROUP-END arguments 24
6.2.18.4 Equivalence between AI EndGroup and DTAM-DM DM-GROUP-END arguments 24
6.2.18.5 AI EndGroup results 24
6.2.18.6 DTAM-DM DM-GROUP-END results 24
6.2.18.7 Equivalence between AI EndGroup and DTAM-DM DM-GROUP-END results 24
6.2.19 DTAM-DM DTAM-DMBind 25
6.2.19.1 General Restrictions 25
6.2.19.2 DTAM-DM DTAM- DMBind arguments 25
6.2.19.3 DTAM-DM DTAM-DMBind results 26
6.2.20 DTAM-DM DTAM-DMUnBind 26

7 Errors returned 26

7.1 'AI errors', 'DTAM-DM errors' and 'DTAM-DMBind / DTAM-DMUnBind errors' tables conventions 26

7.2 AI errors 27
7.2.1 AI errors table 27
7.2.2 AI errors mapping 28

7.3 DTAM-DM errors 29

7.4 DTAM-DMBind / DTAM-DMUnBind errors 30

7.5 'Mapping between AI and DTAM-DM errors' table conventions 30

7.6 Mapping between AI and DTAM-DM errors 30

7.7 'Mapping between DTAM-DM and AI errors' table conventions 32

7.8 Mapping between DTAM-DM and AI errors 32

Copyright International Organization for Standardization
Provided by IHS under license with ISO
No reproduction or networking permitted without license from IHS
Not for Resale

8 DTAM-TK Services 33
8.1.1 DTAM-DM TK-TOKEN-PLEASE 33
8.1.1.1 General Restrictions 33
8.1.1.2 DTAM-DM TK-TOKEN-PLEASE arguments 34
8.1.1.3 DTAM-TK TK-TOKEN-PLEASE results 34
8.1.2 DTAM-TK TK-TOKEN-GIVE 34
8.1.2.1 General Restrictions 34
8.1.2.2 DTAM-TK TK-TOKEN-GIVE arguments 34
8.1.2.3 DTAM-TK TK-TOKEN-GIVE results 34
9 DTAM-TK Errors 35
9.1.1 TK-TOKEN-PLEASE / TK-TOKEN-GIVE errors table 35
9.1.2 TK-TOKEN-PLEASE / TK-TOKEN-GIVE errors mapping 35
10 Constraints on location expression 36
11 Constraints for the DTAM confirmed document manipulation protocol 36
11.1 Asymmetric document applications 36
11.2 Symmetric document applications 36
11.3 Use of ROSE 36
11.4 Use of ACSE, Presentation and Session 36
Annex A (normative) Profile requirements list 37
Annex B (informative) Object Identifiers List 38
Annex C (informative) Use of DM-POINT in ISO/IEC 15121 39

Copyright International Organization for Standardization
Provided by IHS under license with ISO
No reproduction or networking permitted without license from IHS
Not for Resale

Foreword

ISO (the International Organization for Standardization) and IEC (the International Electrotechnical Commission) form the specialized system for worldwide standardization. National bodies that are members of ISO or IEC participate in the development of International Standards through technical committees established by the respective organization to deal with particular fields of technical activity. ISO and IEC technical committees collaborate in fields of mutual interest. Other international organizations, governmental and non-governmental, in liaison with ISO and IEC, also take part in the work.

In the field of information technology, ISO and IEC have established a joint technical committee, ISO/IEC JTC 1. In addition to developing International Standards, ISO/IEC JTC 1 has created a Special Group on Functional Standardization for the elaboration of International Standardized Profiles.

An International Standardized Profile is an internationally agreed, harmonized document which identifies a standard or group of standards, together with options and parameters, necessary to accomplish a function or a set of functions.

Draft International Standardized Profiles are circulated to national bodies for voting. Publication as an International Standardized Profile requires approval by at least 75 % of the national bodies casting a vote.

International Standardized Profile ISO/IEC ISP 15121-3 was prepared with the collaboration of

— Asia-Oceania Workshop (AOW);

— European Workshop for Open Systems (EWOS);

— Open Systems Environment Implementors' Workshop (OIW).

ISO/IEC ISP 15121 consists of the following parts, under the general title *Information technology — International Standardized Profile AOD1n — Interactive Manipulation of ODA Documents*:

— *Part 1: AOD11 — DTAM/Read Only*

— *Part 2: AOD12 — DTAM/Insert*

— *Part 3: AOD13 — DTAM/Manipulation*

Annex A forms an integral part of this part of ISO/IEC ISP 15121. Annexes B and C are for information only.

Copyright International Organization for Standardization
Provided by IHS under license with ISO
No reproduction or networking permitted without license from IHS Not for Resale

Information technology — International Standardized Profile AOD1n — Interactive Manipulation of ODA Documents —

Part 3:
AOD13 — DTAM/Manipulation

1 Scope

1.1 General

AODnn International Standard Profiles (ISPs) specify constraints on implementations of the Abstract Interface for the manipulation of ODA (Open Document Architecture) documents, ITU-T Rec. T.413 | ISO/IEC 8613-3, in order to facilitate different implementations of interactive remote document manipulation applications.

ISO/IEC ISP 15121 ISPs specifies such constraints when the Abstract Interface for the manipulation of ODA documents (AI) is used in combination with Document Transfer and Manipulation for Confirmed Document Manipulation (DTAM-DM), ITU-T Rec. T.435 and T.436. In this case, constraints on implementations of ITU-T Rec. T.435 and T.436 are also specified.

This part of ISO/IEC ISP 15121 (Interactive Manipulation of ODA Documents - DTAM/Manipulation) specifies such constraints for the implementation of applications that provide manipulation on remote ODA documents in an Open Systems Interconnection (OSI) environment.

1.2 Position within the Taxonomy

This part of ISO/IEC ISP 15121 is defined in the taxonomy for Interactive Manipulation of ODA Documents, described in EWOS/TA/94/272 (EWOS/EG/SMMI/94/128). It is the highest profile of those using DTAM (AOD1n).

This part of ISO/IEC ISP 15121 is intended for implementations where ODA documents can be reviewed and modified.

It is a superset of AOD11 and AOD12 profiles.

1.3 User Requirements and Scenario

1.3.1 Asymmetric document applications

The first model used in this part of ISO/IEC ISP 15121 is that of asymmetric remote document applications using services provided by the Abstract Interface for the manipulation of ODA documents (AI), in combination with DTAM confirmed document manipulation (DTAM-DM) service and protocol, in order to get access to a remote ODA document.

In this model, the manipulating application will be called *ODA document manipulation client*, while the system to which ODA clients will remotely access for document interactive manipulation will be called *ODA document manipulation server*. The ODA server application will store the documents and will perform the operations on them.

Figure 1 illustrates the environment within which this first model of this part of ISO/IEC ISP 15121 is applicable.

Copyright International Organization for Standardization
Provided by IHS under license with ISO
No reproduction or networking permitted without license from IHS
Not for Resale

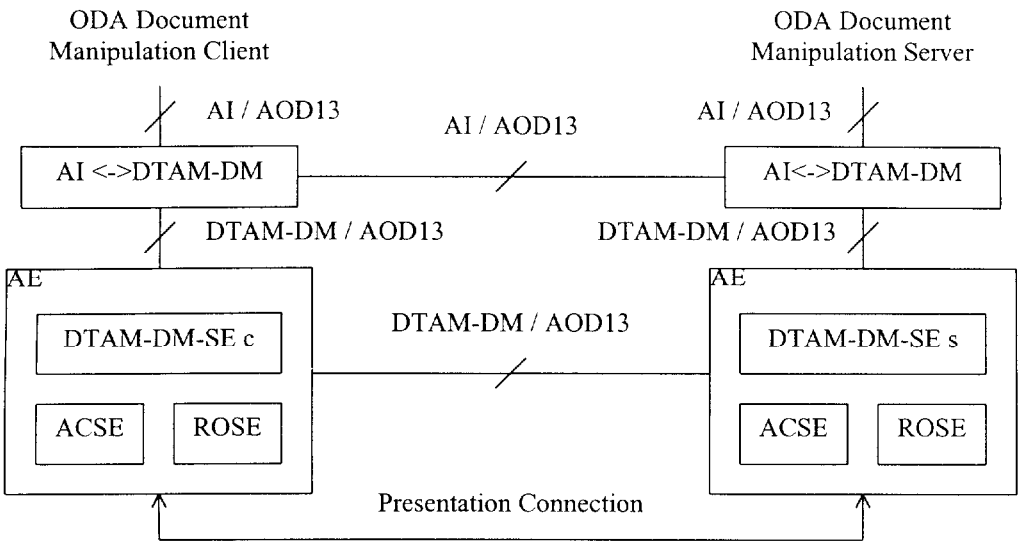

Legend:

ACSE	Association Control Service Element
AE	Application Entity
AI	Abstract Interface for the manipulation of ODA documents
AI/AOD13	Abstract Interface for the manipulation of ODA documents following AOD13 profile
DTAM-DM	Document Transfer And Manipulation - Confirmed Document Manipulation
DTAM-DM/AOD13	Document Transfer And Manipulation - Confirmed Document Manipulation following AOD13 profile
DTAM-DM-SE c	Document Transfer And Manipulation - Confirmed Document Manipulation Service Element - Consumer
DTAM-DM-SE s	Document Transfer And Manipulation - Confirmed Document Manipulation Service Element - Supplier
ROSE	Remote Operations Service Element

Figure 1 - AOD13 Asymmetric document applications environment

1.3.2 Symmetric document applications

The second model used in this part of ISO/IEC ISP 15121 is that of symmetric remote document applications using services provided by the Abstract Interface for the manipulation of ODA documents (AI), in combination with DTAM confirmed document manipulation (DTAM-DM) and DTAM-Token Exchange (DTAM-TK) services and protocols, in order to get access to a remote ODA document.

In this model, the manipulating applications will be called *ODA document manipulation users*, that will remotely access for document interactive manipulation. One (or both) ODA user application(s) will store the documents, and both user applications will be able to perform the operations on them. Additionally, a token will be exchanged between the applications.

Figure 2 illustrates the environment within which this second model of this part of ISO/IEC ISP 15121 is applicable.

Copyright International Organization for Standardization
Provided by IHS under license with ISO
No reproduction or networking permitted without license from IHS
Not for Resale

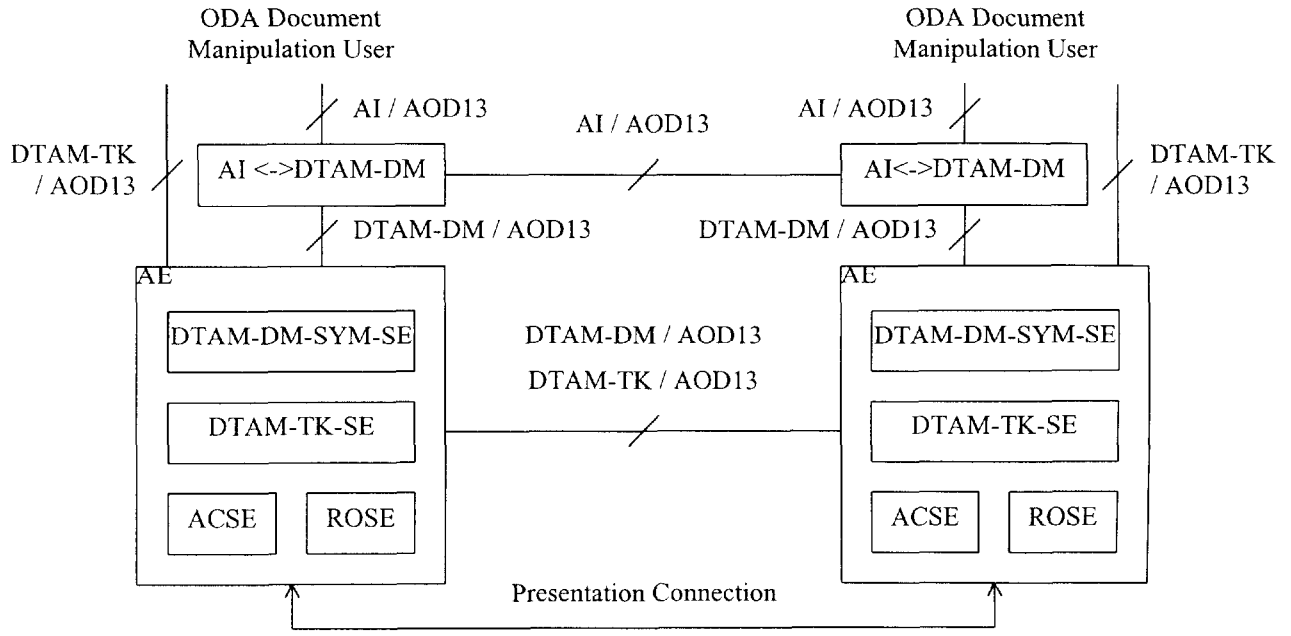

Legend:

ACSE	Association Control Service Element
AE	Application Entity
AI	Abstract Interface for the manipulation of ODA documents
AI/AOD13	Abstract Interface for the manipulation of ODA documents following AOD13 profile
DTAM-DM	Document Transfer And Manipulation - Confirmed Document Manipulation
DTAM-DM/AOD13	Document Transfer And Manipulation - Confirmed Document Manipulation following AOD13 profile
DTAM-DM-SYM-SE	Document Transfer And Manipulation - Confirmed Document Manipulation Symmetric Service Element
DTAM-TK	Document Transfer And Manipulation – Token Exchange
DTAM-TK/AOD13	Document Transfer And Manipulation – Token Exchange following AOD13 profile
DTAM-TK-SE	Document Transfer And Manipulation - Token Exchange Service Element
ROSE	Remote Operations Service Element

Figure 2 - AOD13 Symmetric document applications environment

2 Normative References

The following documents contain provisions which, through reference in this text, constitute provisions of this part of ISO/IEC ISP 15121. At the time of publication, the editions indicated were valid. All documents are subject to revision, and parties to agreements based on this part of ISO/IEC ISP 15121are warned against automatically applying any more recent editions of the documents listed below, since the nature of references made by ISPs to such documents is that they may be specific to a particular edition. Members of IEC and ISO maintain registers of currently valid International Standards and ISPs, and ITU-T maintains published editions of its current Recommendations.

Copyright International Organization for Standardization
Provided by IHS under license with ISO
No reproduction or networking permitted without license from IHS
Not for Resale

2.1 Identical Recommendations | International Standards

- ITU-T Recommendation T.413 (1994) | ISO/IEC 8613-3: 1995, *Information technology - Open Document Architecture (ODA) and interchange format: Abstract interface for the manipulation of ODA documents.*
- ITU-T Recommendation T.422 (1995) | ISO/IEC 8613-12: 1996, *Information technology - Open Document Architecture (ODA) and interchange format: Identification of document fragments.*

2.2 Additional References

- ITU-T Recommendation T.435 (1995), *Document Transfer And Manipulation (DTAM) - Services and Protocols - Abstract service definition and procedures for confirmed document manipulation.*
- ITU-T Recommendation T.436 (1995), *Document Transfer And Manipulation (DTAM) - Services and Protocols - Protocol specifications for confirmed document manipulation.*
- ISO/IEC ISP 11188-1: 1995, *Information technology - International Standardized Profile - Common upper layer requirements - Part 1: Basic connection oriented requirements.*
- ISO/IEC ISP 11188-2: 1996, *Information technology - International Standardized Profile - Common upper layer requirements - Part 2: Basic connection oriented requirements for ROSE-based profiles.*
- ISO/IEC ISP 11188-3: 1996, *Information technology - International Standardized Profile - Common upper layer requirements - Part 3: Minimal OSI upper layer facilities.*
- ISO/IEC ISP 15121-1: 1997, *Information technology - International Standardized Profile AOD1n - Interactive Manipulation of ODA Documents - Part 1: DTAM/Read Only.*
- ISO/IEC ISP 15121-2: 1997, *Information technology - International Standardized Profile AOD1n - Interactive Manipulation of ODA Documents - Part 2: AOD12 - DTAM/Insert.*

3 Definitions

For the purposes of this part of ISO/IEC ISP 15121, the definitions given in ISO/IEC ISP 15121-1 apply.

4 Abbreviations

For the purposes of this part of ISO/IEC ISP 15121, the abbreviations given in ISO/IEC ISP 15121-1 apply.

5 Conformance

This part of ISO/IEC ISP 15121 states requirements upon implementations to achieve interworking. A claim of conformance to this part of ISO/IEC ISP 15121 is a claim that all requirements in the relevant base standards and recommendations are satisfied, that all the requirements in ISO/IEC ISP 11188-2 and ISO/IEC ISP 11188-3 are satisfied, and that all requirements in clauses 6, 7, 8 and 9, and annex A of this part of ISO/IEC ISP 15121 are satisfied. Clauses 6, 7, 8 and 9, and annex A state the equivalence between these requirements and those of the base standards and recommendations.

6 Constraints for the Abstract Interface for the manipulation of ODA documents and for DTAM confirmed document manipulation service

6.1 Support for services provided by AOD13 (Interactive Manipulation of ODA Documents - DTAM/Insert)

The tables in this subclause specify the AI and DTAM-DM operations that are supported by this part of ISO/IEC ISP 15121.

6.1.1 'Support for services provided by AOD13' tables conventions

The specifications provided in ISO/IEC ISP 15121-1, subclause 6.1.1 apply.

Copyright International Organization for Standardization
Provided by IHS under license with ISO
No reproduction or networking permitted without license from IHS Not for Resale

6.1.2 Abstract interface for the manipulation of ODA documents

The following table specifies the AI operations that are supported by this part of ISO/IEC ISP 15121. The symbols used in the table are defined in subclause 6.1.1.

AI Service	P
List	o
Open	m
Close	m
Get	m
Search	m
Create	m
Delete	m
Modify	m
Replace	o
Copy	m
Move	o
Reserve	o
Unreserve	o
BeginGroup	o
EndGroup	o

6.1.3 DTAM confirmed document manipulation

The DTAM-DM 'Extended Level' is required to support ISO/IEC ISP 15121-3.

The following table specifies the DTAM-DM operations as defined in the 'Extended Level' in ITU-T Rec. T.435, and those supported by this part of ISO/IEC ISP 15121. The symbols used in the table are defined in subclause 6.1.1.

DTAM-DM Service	B	P
DTAM-DMBind	m	m
DTAM-DMUnBind	m	m
DM-DOCUMENT-OPEN	m	m
DM-DOCUMENT-SAVE	m	x

Copyright International Organization for Standardization
Provided by IHS under license with ISO
No reproduction or networking permitted without license from IHS
Not for Resale

DM-DOCUMENT-DISCARD	m	x
DM-DOCUMENT-CLOSE	m	m
DM-DOCUMENT-LIST	o	o
DM-GET	m	m
DM-SEARCH	m	m
DM-CREATE	m	m
DM-DELETE	m	m
DM-MODIFY	m	m
DM-COPY	m	m
DM-MOVE	m	o
DM-REPLACE	m	o
DM-RESERVE	m	o
DM-UNRESERVE	m	o
DM-POINT	o	x
DM-MACRO-CALL	f.s.	x
DM-GROUP-BEGIN	f.s.	o
DM-GROUP-END	f.s.	o

6.1.4 'Equivalence between AI and DTAM-DM services' table conventions

The specifications provided in ISO/IEC ISP 15121-1, subclause 6.1.4 apply.

6.1.5 Equivalence between AI and DTAM-DM services

This table specifies the equivalence between all the AI and DTAM-DM operations supported by this part of ISO/IEC ISP 15121. The symbols used in the table are defined in subclause 6.1.4.

When one AI operation is said to be equivalent to one DTAM-DM operation, this means that the AI operation will be mapped into the DTAM-DM operation when sending the operation request, the result or an error, and that the DTAM-DM operation will be mapped into the AI operation when receiving the operation request, the result or an error.

For operations not included in this table, the specifications provided in ISO/IEC ISP 15121-1, table in subclause 6.1.5, and the specifications provided in ISO/IEC ISP 15121-2, table in subclause 6.1.5 applies.

Copyright International Organization for Standardization
Provided by IHS under license with ISO
No reproduction or networking permitted without license from IHS Not for Resale

AI Service	DTAM-DM Service
Delete	DM-DELETE
Modify	DM-MODIFY
Replace	DM-REPLACE
Move	DM-MOVE
BeginGroup	DM-GROUP-BEGIN
EndGroup	DM-GROUP-END

6.2 Support for AI and DTAM-DM operation arguments and results

The text provided in ISO/IEC ISP 15121-1, subclause 6.2 applies.

See ISP AOD11, text in subclause 6.2.

6.2.1 'Support for AI and DTAM-DM operation arguments and results' tables conventions

The specifications provided in ISO/IEC ISP 15121-1, subclause 6.2.1 apply.

6.2.2 Equivalence between AI and DTAM-DM arguments and results

The specifications provided in ISO/IEC ISP 15121-1, subclause 6.2.2 apply.

6.2.3 General Restrictions

Permanent document identifiers shall be used in AOD13 in the List / DM-DOCUMENT-LIST operations result, and in Open / DM-DOCUMENT-OPEN operations argument. Once a document is opened using a permanent document identifier, a non-permanent document identifier shall be returned in the Open / DM-DOCUMENT-OPEN result.

The base standards define the document identifier as optional in the Get / DM-GET, Search / DM-SEARCH, Create / DM-CREATE, Copy / DM-COPY, Reserve / DM-RESERVE, Unreserve / DM-UNRESERVE, Delete / DM-DELETE, Modify / DM-MODIFY, Replace / DM-REPLACE and Move / DM-MOVE operations argument. When only one document is opened at a time, no document identifier shall be necessary for the argument because all those operations shall be performed on the opened document. When more than one document is opened at a time, then, the non-permanent document identifier returned by the Open / DM-DOCUMENT-OPEN result shall be used as document identifier in those operations.

The non-permanent document identifier returned by the Open / DM-DOCUMENT-OPEN result shall be used in the Close / DM-Close operation argument. Once the document is closed, the new permanent document identifier shall be returned in the Close / DM-Close operation result.

6.2.4 AI List / DTAM-DM DM-DOCUMENT-LIST

The specifications provided in ISO/IEC ISP 15121-1, subclause 6.2.4 apply.

6.2.5 AI Open / DTAM-DM DM-DOCUMENT-OPEN

The specifications provided in ISO/IEC ISP 15121-1, subclause 6.2.5 apply.

6.2.6 AI Close / DTAM-DM DM-DOCUMENT-CLOSE

The specifications provided in ISO/IEC ISP 15121-1, subclause 6.2.6 apply.

6.2.7 AI Get / DTAM-DM DM-GET

The specifications provided in ISO/IEC ISP 15121-2, subclause 6.2.7 apply.

Copyright International Organization for Standardization
Provided by IHS under license with ISO
No reproduction or networking permitted without license from IHS Not for Resale

6.2.8 AI Search / DTAM-DM DM-SEARCH

The specifications provided in ISO/IEC ISP 15121-2, subclause 6.2.8 apply.

6.2.9 AI Create / DTAM-DM DM-CREATE

The specifications provided in ISO/IEC ISP 15121-2, subclause 6.2.9 apply.

6.2.10 AI Delete / DTAM-DM DM-DELETE

6.2.10.1 General restrictions

There are no general restrictions for the AI Delete / DTAM-DM DM-DELETE operation.

6.2.10.2 AI Delete arguments

The following table defines the AI Delete operation arguments as defined in ITU-T Rec. T.413 | ISO/IEC 8613-3, and those supported by this part of ISO/IEC ISP 15121. The symbols used in the table are defined in subclause 6.2.1.

The argument of the AI Delete operation is a data structure of type LocationInDocumentType. LocationInDocumentType is a SEQUENCE of an optional data structure of type DocumentId and a data structure of type Location-expression. Document-Id is a CHOICE between two options.

Ref.	Argument	B	P	Constraint / value
1	location-in-document	m	m	
1.1	document	o	o	Mandatory if more than one document is open
1.1.1	permanent	o.1	x	
1.1.2	non-permanent	o.1	m	
1.2	location	m	m	

o.1: One and only one of the two marked items shall be selected.

6.2.10.3 DTAM-DM DM-DELETE arguments

The following table defines the DTAM-DM DM-DELETE operation arguments as defined in ITU-T Rec. T.435, and those supported by this part of ISO/IEC ISP 15121. The symbols used in the table are defined in subclause 6.2.1.

The argument of the DTAM-DM DM-DELETE operation is a SEQUENCE of a data structure of type ManipulationObject. ManipulationObject is a SEQUENCE of an optional data structure of type DocumentId and an optional data structure of type ObjectValue. DocumentId is a CHOICE between four options. ObjectValue is a CHOICE between three options. NonPermanentIdentifier is a CHOICE between two options. Oda-Expression is a CHOICE between four options.

Copyright International Organization for Standardization
Provided by IHS under license with ISO
No reproduction or networking permitted without license from IHS Not for Resale

Ref.	Argument	B	P	Constraint / value
1	object	m	m	
1.1	documentIdentifier	o	o	Mandatory if more than one document is open
1.1.1	dfrName	o.1	x	
1.1.2	documentReference	o.1	x	
1.1.3	documentName	o.1	x	
1.1.4	nonPermanentIdentifier	o.1	m	
1.1.4.1	integer	o.2	m	
1.1.4.2	octetString	o.2	x	
1.2	objectValue	o	m	
1.2.1	odaExpression	o.3	m	
1.2.1.1	locationExpression	o.4	m	
1.2.1.2	basicLocationExpression	o.4	x	
1.2.1.3	constituentLocator	o.4	x	
1.2.1.4	constituentIdentifier	o.4	x	
1.2.2	otherExpression	o.3	x	
1.2.3	anyExpression	o.3	x	

o.1: One and only one of the four marked items shall be selected.

o.2: One and only one of the two marked items shall be selected.

o.3: One and only one of the three marked items shall be selected.

o.4: One and only one of the four marked items shall be selected.

6.2.10.4 Equivalence between AI Delete and DTAM-DM DM-DELETE arguments

This subclause specifies the equivalence, as defined in subclause 6.2.2, between the AI Delete and the DTAM-DM DM-DELETE operation arguments that are supported by ITU-T Rec. T.413 | ISO/IEC 8613-3, ITU-T Rec. T.435 and this part of ISO/IEC ISP 15121.

The equivalencies are:

- The AI "non-permanent" argument (Ref. 1.1.2) is equivalent to the DTAM-DM "integer" argument (Ref. 1.1.4.1).
- The AI "location" argument (Ref. 1.2) is equivalent to the DTAM-DM "locationExpression" argument (Ref. 1.2.1.1).

Copyright International Organization for Standardization
Provided by IHS under license with ISO
No reproduction or networking permitted without license from IHS
Not for Resale

6.2.10.5 AI Delete results

The following table defines the AI Delete operation results as defined in ITU-T Rec. T.413 | ISO/IEC 8613-3, and those supported by this part of ISO/IEC ISP 15121. The symbols used in the table are defined in subclause 6.2.1.

The result of the AI Delete operation is a data structure of type SuccessType. SuccessType is a BOOLEAN.

Ref.	Result	B	P	Constraint / value
1	success	m	m	The value shall be equal to 'TRUE'

6.2.10.6 DTAM-DM DM-DELETE results

The following table defines the DTAM-DM DM-DELETE operation results as defined in ITU-T Rec. T.435, and those supported by this part of ISO/IEC ISP 15121. The symbols used in the table are defined in subclause 6.2.1.

The result of the DTAM-DM DM-DELETE operation is a NULL.

Ref.	Result	B	P	Constraint / value
1	null	m	m	

6.2.10.7 Equivalence between AI Delete and DTAM-DM DM-DELETE results

This subclause specifies the equivalence, as defined in subclause 6.2.2, between the AI Delete and the DTAM-DM DM-DELETE operation results that are supported by ITU-T Rec. T.413 | ISO/IEC 8613-3, ITU-T Rec. T.435 and this part of ISO/IEC ISP 15121.

The equivalence is:

- The AI "success" result (Ref. 1) has no DTAM-DM equivalent result.

NOTE - No value is needed for the DTAM-DM DM-DELETE operation result, since it is always 'TRUE'. Otherwise, the response of the DTAM-DM DM-DELETE operation would be an error.

6.2.11 AI Modify / DTAM-DM DM-MODIFY

6.2.11.1 General restrictions

There are no general restrictions for the AI Modify / DTAM-DM DM-MODIFY operation.

6.2.11.2 AI Modify arguments

The following table defines the AI Modify operation arguments as defined in ITU-T Rec. T.413 | ISO/IEC 8613-3, and those supported by this part of ISO/IEC ISP 15121. The symbols used in the table are defined in subclause 6.2.1.

The argument of the AI Modify operation is a SEQUENCE of three data structures. The first data structure is of type LocationInDocumentType, the second one is of type AttributeValuesType and the third one is a BOOLEAN DEFAULT FALSE. LocationInDocumentType is a SEQUENCE of an optional data structure of type DocumentId and a data structure of type Location-expression. Document-Id is a CHOICE between two options. AttributeValuesType is a data structure of type Interchange-Data-Element.

Copyright International Organization for Standardization
Provided by IHS under license with ISO
No reproduction or networking permitted without license from IHS Not for Resale

Ref.	Argument	B	P	Constraint / value
1	location-in-document	m	m	
1.1	document	o	o	Mandatory if more than one document is open
1.1.1	permanent	o.1	x	
1.1.2	non-permanent	o.1	m	
1.2	location	m	m	
2	attributeValue	m	m	
3	deleting	o	o	The default value is 'FALSE'

o.1: One and only one of the two marked items shall be selected.

6.2.11.3 DTAM-DM DM-MODIFY arguments

The following table defines the DTAM-DM DM-MODIFY operation arguments as defined in ITU-T Rec. T.435, and those supported by this part of ISO/IEC ISP 15121. The symbols used in the table are defined in subclause 6.2.1.

The argument of the DTAM-DM DM-MODIFY operation is a SEQUENCE of two data structures. The first data structure is of type ManipulationObject and the second one is of type ModificationsType. ManipulationObject is a SEQUENCE of an optional data structure of type DocumentId and an optional data structure of type ObjectValue. DocumentId is a CHOICE between four options. ObjectValue is a CHOICE between three options. ModificationsType is a CHOICE between a data structure of type OdaModifications, an OCTET STRING and ANY. OdaModifications is a SEQUENCE of a data structure of type AttributeValuesType and a BOOLEAN. NonPermanentIdentifier is a CHOICE between two options. Oda-Expression is a CHOICE between four options.

Copyright International Organization for Standardization
Provided by IHS under license with ISO
No reproduction or networking permitted without license from IHS
Not for Resale

Ref.	Argument	B	P	Constraint / value
1	object	m	m	
1.1	documentIdentifier	o	o	Mandatory if more than one document is open
1.1.1	dfrName	o.1	x	
1.1.2	documentReference	o.1	x	
1.1.3	documentName	o.1	x	
1.1.4	nonPermanentIdentifier	o.1	m	
1.1.4.1	integer	o.2	m	
1.1.4.2	octetString	o.2	x	
1.2	objectValue	o	m	
1.2.1	odaExpression	o.3	m	
1.2.1.1	locationExpression	o.4	m	
1.2.1.2	basicLocationExpression	o.4	x	
1.2.1.3	constituentLocator	o.4	x	
1.2.1.4	constituentIdentifier	o.4	x	
1.2.2	otherExpression	o.3	x	
1.2.3	anyExpression	o.3	x	
2	modifications	m	m	
2.1	odaModifications	o.5	m	
2.1.1	attributeValue	m	m	
2.1.2	deleting	o	o	The default value is 'FALSE'
2.2	otherModifications	o.5	x	
2.3	anyModifications	o.5	x	

o.1: One and only one of the four marked items shall be selected.

o.2: One and only one of the two marked items shall be selected.

o.3: One and only one of the three marked items shall be selected.

o.4: One and only one of the four marked items shall be selected.

o.5: One and only one of the three marked items shall be selected.

Copyright International Organization for Standardization
Provided by IHS under license with ISO
No reproduction or networking permitted without license from IHS Not for Resale

6.2.11.4 Equivalence between AI Modify and DTAM-DM DM-MODIFY arguments

This subclause specifies the equivalence, as defined in subclause 6.2.2, between the AI Modify and the DTAM-DM DM-MODIFY operation arguments that are supported by ITU-T Rec. T.413 | ISO/IEC 8613-3, ITU-T Rec. T.435 and this part of ISO/IEC ISP 15121.

The equivalencies are:

- The AI "non-permanent" argument (Ref. 1.1.2) is equivalent to the DTAM-DM "integer" argument (Ref. 1.1.4.1).
- The AI "location" argument (Ref. 1.2) is equivalent to the DTAM-DM "locationExpression" argument (Ref. 1.2.1.1).
- The AI "attributeValue" argument (Ref. 2) is equivalent to the DTAM-DM "attributeValue" argument (Ref. 2.1.1).
- The AI "deleting" argument (Ref. 3) is equivalent to the DTAM-DM "deleting" argument (Ref. 2.1.2).

6.2.11.5 AI Modify results

The following table defines the AI Modify operation results as defined in ITU-T Rec. T.413 | ISO/IEC 8613-3, and those supported by this part of ISO/IEC ISP 15121. The symbols used in the table are defined in subclause 6.2.1.

The result of the AI Modify operation is a data structure of type SuccessType. SuccessType is a BOOLEAN.

Ref.	Result	B	P	Constraint / value
1	success	m	m	The value shall be equal to 'TRUE'

6.2.11.6 DTAM-DM DM-MODIFY results

The following table defines the DTAM-DM DM-MODIFY operation results as defined in ITU-T Rec. T.435, and those supported by this part of ISO/IEC ISP 15121. The symbols used in the table are defined in subclause 6.2.1.

The result of the DTAM-DM DM-MODIFY operation is a NULL.

Ref.	Result	B	P	Constraint / value
1	null	m	m	

6.2.11.7 Equivalence between AI Modify and DTAM-DM DM-MODIFY results

This subclause specifies the equivalence, as defined in subclause 6.2.2, between the AI Modify and the DTAM-DM DM-MODIFY operation results that are supported by ITU-T Rec. T.413 | ISO/IEC 8613-3, ITU-T Rec. T.435 and this part of ISO/IEC ISP 15121.

The equivalence is:

- The AI "success" result (Ref. 1) has no DTAM-DM equivalent result.

NOTE - No value is needed for the DTAM-DM DM-MODIFY operation result, since it is always 'TRUE'. Otherwise, the response of the DTAM-DM DM-MODIFY operation would be an error.

6.2.12 AI Replace / DTAM-DM DM-REPLACE

6.2.12.1 General restrictions

There are no general restrictions for the AI Replace / DTAM-DM DM-REPLACE operation.

Copyright International Organization for Standardization
Provided by IHS under license with ISO
No reproduction or networking permitted without license from IHS
Not for Resale

6.2.12.2 AI Replace arguments

The following table defines the AI Replace operation arguments as defined in ITU-T Rec. T.413 | ISO/IEC 8613-3, and those supported by this part of ISO/IEC ISP 15121. The symbols used in the table are defined in subclause 6.2.1.

The argument of the AI Replace operation is a SEQUENCE of two data structures. The first data structure is a SEQUENCE OF ConstituentType, and the second one is of type ConstituentLocationInDocumentType. ConstituentLocationInDocumentType is a SEQUENCE of an optional Document-Id and an optional Constituent-locator.

Ref.	Argument	B	P	Constraint / value
1	constituent-or-subtree	m	m	
2	location-in-document	o	m	
2.1	document	o	o	Mandatory if more than one document is open
2.1.1	permanent	o.1	x	
2.1.2	non-permanent	o.1	m	
2.2	constituent-location	o	m	

o.1: One and only one of the two marked items shall be selected.

6.2.12.3 DTAM-DM DM-REPLACE arguments

The following table defines the DTAM-DM DM-REPLACE operation arguments as defined in ITU-T Rec. T.435, and those supported by this part of ISO/IEC ISP 15121. The symbols used in the table are defined in subclause 6.2.1.

The argument of the DTAM-DM DM-REPLACE operation is a SEQUENCE of two data structures. The first data structure is of type ManipulationObject, and the second one is of type ObjectContent. ManipulationObject is a SEQUENCE of an optional data structure of type DocumentId and an optional data structure of type ObjectValue. ObjectContent is a CHOICE between three data structures. DocumentId is a CHOICE between four options. ObjectValue is a CHOICE between three options. NonPermanentIdentifier is a CHOICE between two options. Oda-Expression is a CHOICE between four options.

Copyright International Organization for Standardization
Provided by IHS under license with ISO
No reproduction or networking permitted without license from IHS Not for Resale

Ref.	Argument	B	P	Constraint / value
1	object	m	m	
1.1	documentIdentifier	o	o	Mandatory if more than one document is open
1.1.1	dfrName	o.1	x	
1.1.2	documentReference	o.1	x	
1.1.3	documentName	o.1	x	
1.1.4	nonPermanentIdentifier	o.1	m	
1.1.4.1	integer	o.2	m	
1.1.4.2	octetString	o.2	x	
1.2	objectValue	o	m	
1.2.1	odaExpression	o.3	m	
1.2.1.1	locationExpression	o.4	x	
1.2.1.2	basicLocationExpression	o.4	x	
1.2.1.3	constituentLocator	o.4	m	
1.2.1.4	constituentIdentifier	o.4	x	
1.2.2	otherExpression	o.3	x	
1.2.3	anyExpression	o.3	x	
2	content	o	m	
2.1	odaContent	o.5	m	
2.2	octetAligned	o.5	x	
2.3	anyContent	o.5	x	

o.1: One and only one of the four marked items shall be selected.

o.2: One and only one of the two marked items shall be selected.

o.3: One and only one of the three marked items shall be selected.

o.4: One and only one of the four marked items shall be selected.

o.5: One and only one of the three marked items shall be selected.

6.2.12.4 Equivalence between AI Replace and DTAM-DM DM-REPLACE arguments

This subclause specifies the equivalence, as defined in subclause 6.2.2, between the AI Replace and the DTAM-DM DM-REPLACE operation arguments that are supported by ITU-T Rec. T.413 | ISO/IEC 8613-3, ITU-T Rec. T.435 and this part of ISO/IEC ISP 15121.

Copyright International Organization for Standardization
Provided by IHS under license with ISO
No reproduction or networking permitted without license from IHS Not for Resale

The equivalencies are:

- The AI "constituent-or-subtree" argument (Ref. 1) is equivalent to the DTAM-DM "odaContent" argument (Ref. 2.1).
- The AI "non-permanent" argument (Ref. 2.1.2) is equivalent to the DTAM-DM "integer" argument (Ref. 1.1.4.1).
- The AI "constituent-location" (Ref. 2.2) is equivalent to the DTAM-DM "constituentLocator" argument (Ref. 1.2.1.3).

6.2.12.5 AI Replace results

The following table defines the AI Replace operation results as defined in ITU-T Rec. T.413 | ISO/IEC 8613-3, and those supported by this part of ISO/IEC ISP 15121. The symbols used in the table are defined in subclause 6.2.1.

The result of the AI Replace operation is a data structure of type SuccessType. SuccessType is a BOOLEAN.

Ref.	Result	B	P	Constraint / value
1	success	m	m	The value shall be equal to 'TRUE'

6.2.12.6 DTAM-DM DM-REPLACE results

The following table defines the DTAM-DM DM-REPLACE operation results as defined in ITU-T Rec. T.435, and those supported by this part of ISO/IEC ISP 15121. The symbols used in the table are defined in subclause 6.2.1.

The result of the DTAM-DM DM-REPLACE operation is a NULL.

Ref.	Result	B	P	Constraint / value
1	null	m	m	

6.2.12.7 Equivalence between AI Replace and DTAM-DM DM-REPLACE results

This subclause specifies the equivalence, as defined in subclause 6.2.2, between the AI Replace and the DTAM-DM DM-REPLACE operation results that are supported by ITU-T Rec. T.413 | ISO/IEC 8613-3, ITU-T Rec. T.435 and this part of ISO/IEC ISP 15121.

The equivalence is:

- The AI "success" result (Ref. 1) has no DTAM-DM equivalent result.

NOTE - No value is needed for the DTAM-DM DM-REPLACE operation result, since it is always 'TRUE'. Otherwise, the response of the DTAM-DM DM-REPLACE operation would be an error.

6.2.13 AI Copy / DTAM-DM DM-COPY

The specifications provided in ISO/IEC ISP 15121-2, subclause 6.2.10 apply.

6.2.14 AI Move / DTAM-DM DM-MOVE

6.2.14.1 General restrictions

There are no general restrictions for the AI Move / DTAM-DM DM-MOVE operation.

6.2.14.2 AI Move arguments

The following table defines the AI Move operation arguments as defined in ITU-T Rec. T.413 | ISO/IEC 8613-3, and those supported by this part of ISO/IEC ISP 15121. The symbols used in the table are defined in subclause 6.2.1.

Copyright International Organization for Standardization
Provided by IHS under license with ISO
No reproduction or networking permitted without license from IHS Not for Resale

The argument of the AI Move operation is a SEQUENCE of three data structures. The first one is of type BasicLocationInDocumentType, the second one is an optional data structure of type ConstituentLocationInDocumentType and the third one is an optional data structure of type PositionType. BasicLocationInDocumentType is a SEQUENCE of an optional data structure of type Document-Id and a data structure of type Basic-location-expression. ConstituentLocationInDocumentType is a SEQUENCE of an optional data structure of type Document-Id and an optional data structure of type Constituent-locator. Document-Id is a CHOICE between two options. PositionType is an ENUMERATED.

Ref.	Argument	B	P	Constraint / value
1	source	m	m	
1.1	document	o	o	Mandatory if more than one document is open
1.1.1	permanent	o.1	x	
1.1.2	non-permanent	o.1	m	
1.2	basic-location	m	m	
2	target	o	m	Mandatory, although it would not be necessary if only one document is open and the constituent is neither an object (other than the logical or layout root) nor a content portion
2.1	document	o	o	Mandatory if more than one document is open
2.1.1	permanent	o.2	x	
2.1.2	non-permanent	o.2	m	
2.2	constituent-location	o	o	Mandatory if the constituent is an object (other than the logical or layout root) or a content portion
3	position	o	m	Mandatory, although it would not be necessary if the constituent is neither an object (other than the logical or layout root) nor a content portion

o.1: One and only one of the two marked items shall be selected.

o.2: One and only one of the two marked items shall be selected.

6.2.14.3 DTAM-DM DM-MOVE arguments

The following table defines the DTAM-DM DM-MOVE operation arguments as defined in ITU-T Rec. T.435, and those supported by this part of ISO/IEC ISP 15121. The symbols used in the table are defined in subclause 6.2.1.

The argument of the DTAM-DM DM-MOVE operation is a SEQUENCE of three data structures. The first and the second ones are optional data structures of type ManipulationObject and the third one is an optional data structure of type ObjectPosition. ManipulationObject is a SEQUENCE of an optional data structure of type DocumentId and an optional data structure of type ObjectValue. ObjectPosition is an ENUMERATED. DocumentId is a CHOICE between four options. ObjectValue is a CHOICE between three options. NonPermanentIdentifier is a CHOICE between two options. Oda-Expression is a CHOICE between four options.

Copyright International Organization for Standardization
Provided by IHS under license with ISO
No reproduction or networking permitted without license from IHS Not for Resale

Copyright International Organization for Standardization
Provided by IHS under license with ISO
No reproduction or networking permitted without license from IHS Not for Resale

Ref.	Argument	B	P	Constraint / value
1	source	m	m	
1.1	documentIdentifier	o	o	Mandatory if more than one document is open
1.1.1	dfrName	o.1	x	
1.1.2	documentReference	o.1	x	
1.1.3	documentName	o.1	x	
1.1.4	nonPermanentIdentifier	o.1	m	
1.1.4.1	integer	o.2	m	
1.1.4.2	octetString	o.2	x	
1.2	objectValue	o	m	
1.2.1	odaExpression	o.3	m	
1.2.1.1	locationExpression	o.4	x	
1.2.1.2	basicLocationExpression	o.4	m	
1.2.1.3	constituentLocator	o.4	x	
1.2.1.4	constituentIdentifier	o.4	x	
1.2.2	otherExpression	o.3	x	
1.2.3	anyExpression	o.3	x	
2	destination	m	m	Mandatory, although it would not be necessary if only one document is open and the constituent is neither an object (other than the logical or layout root) nor a content portion
2.1	documentIdentifier	o	o	Mandatory if more than one document is open
2.1.1	dfrName	o.5	x	
2.1.2	documentReference	o.5	x	
2.1.3	documentName	o.5	x	
2.1.4	nonPermanentIdentifier	o.5	m	
2.1.4.1	integer	o.6	m	
2.1.4.2	octetString	o.6	x	

Copyright International Organization for Standardization
Provided by IHS under license with ISO
No reproduction or networking permitted without license from IHS Not for Resale

2.2	objectValue	o	o	Mandatory if the constituent is an object (other than the logical or layout root) or a content portion
2.2.1	odaExpression	o.7	m	
2.2.1.1	locationExpression	o.8	x	
2.2.1.2	basicLocationExpression	o.8	x	
2.2.1.3	constituentLocator	o.8	m	
2.2.1.4	constituentIdentifier	o.8	x	
2.2.2	otherExpression	o.7	x	
2.2.3	anyExpression	o.7	x	
3	position	m	m	Mandatory, although it would not be necessary if the constituent is neither an object (other than the logical or layout root) nor a content portion

o.1: One and only one of the four marked items shall be selected.

o.2: One and only one of the two marked items shall be selected.

o.3: One and only one of the three marked items shall be selected.

o.4: One and only one of the four marked items shall be selected.

o.5: One and only one of the four marked items shall be selected.

o.6: One and only one of the two marked items shall be selected.

o.7: One and only one of the three marked items shall be selected.

o.8: One and only one of the four marked items shall be selected.

6.2.14.4 Equivalence between AI Move and DTAM-DM DM-MOVE arguments

This subclause specifies the equivalence, as defined in subclause 6.2.2, between the AI Move and the DTAM-DM DM-MOVE operation arguments that are supported by ITU-T Rec. T.413 | ISO/IEC 8613-3, ITU-T Rec. T.435 and this part of ISO/IEC ISP 15121.

The equivalencies are:

- The AI "non-permanent" argument (Ref. 1.1.2) is equivalent to the DTAM-DM "integer" argument (Ref. 1.1.4.1).
- The AI "basic-location" argument (Ref. 1.2) is equivalent to the DTAM-DM "basicLocationExpression" argument (Ref. 1.2.1.2).
- The AI "non-permanent" argument (Ref. 2.1.2) is equivalent to the DTAM-DM "integer" argument (Ref. 2.2.4.1).
- The AI "constituent-location" argument (Ref. 2.2) is equivalent to the DTAM-DM "constituentLocator" argument (Ref. 2.2.1.3).
- The AI "position" argument (Ref. 3) is equivalent to the DTAM-DM "position" argument (Ref. 3).

6.2.14.5 AI Move results

The following table defines the AI Move operation results as defined in ITU-T Rec. T.413 | ISO/IEC 8613-3, and those supported by this part of ISO/IEC ISP 15121. The symbols used in the table are defined in subclause 6.2.1.

Copyright International Organization for Standardization
Provided by IHS under license with ISO
No reproduction or networking permitted without license from IHS Not for Resale

The result of the AI Move operation is a data structure of type ConstituentIdentifier. ConstituentIdentifier is a CHOICE between three options.

Ref.	Result	B	P	Constraint / value
1	constituentIdentifier	m	m	
1.1	object-or-class	o.1	o.1	
1.2	content-portion	o.1	o.1	
1.3	style	o.1	o.1	

o.1: One and only one of the three marked items shall be selected.

6.2.14.6 DTAM-DM DM-MOVE results

The following table defines the DTAM-DM DM-MOVE operation results as defined in ITU-T Rec. T.435, and those supported by this part of ISO/IEC ISP 15121. The symbols used in the table are defined in subclause 6.2.1.

The result for the DTAM-DM DM-MOVE operation is SEQUENCE of ManipulationObject. ManipulationObject is a SEQUENCE of an optional data structure of type DocumentId and an optional data structure of type ObjectValue. ObjectValue is a CHOICE between three options. Oda-Expression is a CHOICE between four options.

Ref.	Result	B	P	Constraint / value
1	newConstituent	m	m	
1.1	documentIdentifier	o	x	
1.2	objectValue	o	m	
1.2.1	odaExpression	o.1	m	
1.2.1.1	locationExpression	o.2	x	
1.2.1.2	basicLocationExpression	o.2	x	
1.2.1.3	constituentLocator	o.2	x	
1.2.1.4	constituentIdentifier	o.2	m	
1.2.2	otherExpression	o.1	x	
1.3	anyExpression	o.1	x	

o.1: One and only one of the three marked items shall be selected.

o.2: One and only one of the four marked items shall be selected.

6.2.14.7 Equivalence between AI Move and DTAM-DM DM-MOVE results

This subclause specifies the equivalence, as defined in subclause 6.2.2, between the AI Move and the DTAM-DM DM-MOVE operation results that are supported by ITU-T Rec. T.413 | ISO/IEC 8613-3, ITU-T Rec. T.435 and this part of ISO/IEC ISP 15121.

The equivalencies are:

Copyright International Organization for Standardization
Provided by IHS under license with ISO
No reproduction or networking permitted without license from IHS Not for Resale

- The AI "constituentIdentifier" result (Ref. 1) is equivalent to the DTAM-DM "constituentIdentifier" result (Ref. 1.2.1.1).

6.2.15 AI Reserve / DTAM-DM DM-RESERVE

The specifications provided in ISO/IEC ISP 15121-2, subclause 6.2.11 apply.

6.2.16 AI Unreserve / DTAM-DM DM-UNRESERVE

The specifications provided in ISO/IEC ISP 15121-2, subclause 6.2.12 apply.

6.2.17 AI BeginGroup / DTAM-DM DM-GROUP-BEGIN

6.2.17.1 General restrictions

There are no general restrictions for the AI BeginGroup / DTAM-DM DM-GROUP-BEGIN operation.

6.2.17.2 AI BeginGroup arguments

The following table defines the AI BeginGroup operation arguments as defined in ITU-T Rec. T.413 | ISO/IEC 8613-3, and those supported by this part of ISO/IEC ISP 15121. The symbols used in the table are defined in subclause 6.2.1.

The argument of the AI BeginGroup operation is a SEQUENCE of two INTEGERS.

Ref.	Argument	B	P	Constraint / value
1	group-identifier	m	m	
2	invocation-identifier	m	m	

6.2.17.3 DTAM-DM DM-GROUP-BEGIN arguments

The following table defines the DTAM-DM DM-GROUP-BEGIN operation arguments as defined in ITU-T Rec. T.435, and those supported by this part of ISO/IEC ISP 15121. The symbols used in the table are defined in subclause 6.2.1.

The argument of the DTAM-DM DM-GROUP-BEGIN operation is a NULL.

Ref.	Argument	B	P	Constraint / value
1	null	m	m	

6.2.17.4 Equivalence between AI BeginGroup and DTAM-DM DM-GROUP-BEGIN arguments

This subclause specifies the equivalence, as defined in subclause 6.2.2, between the AI BeginGroup and the DTAM-DM DM-GROUP-BEGIN operation arguments that are supported by ITU-T Rec. T.413 | ISO/IEC 8613-3, ITU-T Rec. T.435 and this part of ISO/IEC ISP 15121.

The equivalencies are:

- The AI "group-identifier" argument (Ref. 1) has no DTAM-DM equivalent argument.
- The AI "invocation-identifier" argument (Ref. 2) has no DTAM-DM equivalent argument.

NOTE - The value of the "group-identifier" and "invocation-identifier" AI BeginGroup operation arguments are not needed since the use of these attributes in the AI EndGroup operation arguments is not allowed by this part of ISO/IEC ISP 15121.

Copyright International Organization for Standardization
Provided by IHS under license with ISO
No reproduction or networking permitted without license from IHS Not for Resale

6.2.17.5 AI BeginGroup results

The following table defines the AI BeginGroup operation results as defined in ITU-T Rec. T.413 | ISO/IEC 8613-3, and those supported by this part of ISO/IEC ISP 15121. The symbols used in the table are defined in subclause 6.2.1.

The result of the AI BeginGroup operation is a data structure of type SuccessType. SuccessType is a BOOLEAN.

Ref.	Result	B	P	Constraint / value
1	success	m	m	The value shall be equal to 'TRUE'

6.2.17.6 DTAM-DM DM-GROUP-BEGIN results

The following table defines the DTAM-DM DM-GROUP-BEGIN operation results as defined in ITU-T Rec. T.435, and those supported by this part of ISO/IEC ISP 15121. The symbols used in the table are defined in subclause 6.2.1.

The result of the DTAM-DM DM-GROUP-BEGIN operation is a NULL.

Ref.	Argument	B	P	Constraint / value
1	null	m	m	

6.2.17.7 Equivalence between AI BeginGroup and DTAM-DM DM-GROUP-BEGIN results

This subclause specifies the equivalence, as defined in subclause 6.2.2, between the AI BeginGroup and the DTAM-DM DM-GROUP-BEGIN operation results that are supported by ITU-T Rec. T.413 | ISO/IEC 8613-3, ITU-T Rec. T.435 and this part of ISO/IEC ISP 15121.

The equivalence is:

- The AI "success" result (Ref. 1) has no DTAM-DM equivalent result.

NOTE - No value is needed for the DTAM-DM DM-GROUP-BEGIN operation result, since it is always 'TRUE'. Otherwise, the response of the DTAM-DM DM-GROUP-BEGIN operation would be an error.

6.2.18 AI EndGroup / DTAM-DM DM-GROUP-END

6.2.18.1 General restrictions

There are no general restrictions for the AI EndGroup / DTAM-DM DM-GROUP-END operation.

6.2.18.2 AI EndGroup arguments

The following table defines the AI EndGroup operation arguments as defined in ITU-T Rec. T.413 | ISO/IEC 8613-3, and those supported by this part of ISO/IEC ISP 15121. The symbols used in the table are defined in subclause 6.2.1.

The argument of the AI EndGroup operation is a SEQUENCE of two INTEGERS.

Ref.	Argument	B	P	Constraint / value
1	group-identifier	m	m	
2	invocation-identifier	m	m	

Copyright International Organization for Standardization
Provided by IHS under license with ISO
No reproduction or networking permitted without license from IHS
Not for Resale

6.2.18.3 DTAM-DM DM-GROUP-END arguments

The following table defines the DTAM-DM DM-GROUP-END operation arguments as defined in ITU-T Rec. T.435, and those supported by this part of ISO/IEC ISP 15121. The symbols used in the table are defined in subclause 6.2.1.

The argument of the DTAM-DM DM-GROUP-END operation is a NULL.

Ref.	Argument	B	P	Constraint / value
1	null	m	m	

6.2.18.4 Equivalence between AI EndGroup and DTAM-DM DM-GROUP-END arguments

This subclause specifies the equivalence, as defined in subclause 6.2.2, between the AI EndGroup and the DTAM-DM DM-GROUP-END operation arguments that are supported by ITU-T Rec. T.413 | ISO/IEC 8613-3, ITU-T Rec. T.435 and this part of ISO/IEC ISP 15121.

The equivalencies are:

- The AI "group-identifier" argument (Ref. 1) has no DTAM-DM equivalent argument.
- The AI "invocation-identifier" argument (Ref. 2) has no DTAM-DM equivalent argument.

NOTE - The value of the "group-identifier" and "invocation-identifier" AI EndGroup operation arguments are not needed since the group that is ended with the AI EndGroup operation in the last opened one.

6.2.18.5 AI EndGroup results

The following table defines the AI EndGroup operation results as defined in ITU-T Rec. T.413 | ISO/IEC 8613-3, and those supported by this part of ISO/IEC ISP 15121. The symbols used in the table are defined in subclause 6.2.1.

The result of the AI EndGroup operation is a data structure of type SuccessType. SuccessType is a BOOLEAN.

Ref.	Result	B	P	Constraint / value
1	success	m	m	The value shall be equal to 'TRUE'

6.2.18.6 DTAM-DM DM-GROUP-END results

The following table defines the DTAM-DM DM-GROUP-END operation results as defined in ITU-T Rec. T.435, and those supported by this part of ISO/IEC ISP 15121. The symbols used in the table are defined in subclause 6.2.1.

The result of the DTAM-DM DM-GROUP-END operation is a NULL.

Ref.	Argument	B	P	Constraint / value
1	null	m	m	

6.2.18.7 Equivalence between AI EndGroup and DTAM-DM DM-GROUP-END results

This subclause specifies the equivalence, as defined in subclause 6.2.2, between the AI EndGroup and the DTAM-DM DM-GROUP-END operation results that are supported by ITU-T Rec. T.413 | ISO/IEC 8613-3, ITU-T Rec. T.435 and this part of ISO/IEC ISP 15121.

The equivalence is:

Copyright International Organization for Standardization
Provided by IHS under license with ISO
No reproduction or networking permitted without license from IHS Not for Resale

- The AI "success" result (Ref. 1) has no DTAM-DM equivalent result.

NOTE - No value is needed for the DTAM-DM DM-GROUP-END operation result, since it is always 'TRUE'. Otherwise, the response of the DTAM-DM DM-GROUP-END operation would be an error.

6.2.19 DTAM-DM DTAM-DMBind

6.2.19.1 General Restrictions

The specifications provided in ISO/IEC ISP 15121-1, subclause 6.2.9.1 apply.

6.2.19.2 DTAM-DM DTAM- DMBind arguments

The following table defines the DTAM-DM DTAM-DMBind operation arguments as defined in ITU-T Rec. T.435, and those supported by this part of ISO/IEC ISP 15121. The symbols used in the table are defined in subclause 6.2.1.

The argument of the DTAM-DM DTAM-DMBind operation is a SEQUENCE of six data structures. The first data structure is a BIT STRING, the second one is of type ManipulationCapabilities, the third one is an optional SEQUENCE OF OdaApplicationCapabilities, the fourth one is an optional data structure of type DfrCapabilities, the fifth one is an optional SEQUENCE OF BilateralInformation, and the sixth one is an optional data structure of type ApplicationRequirements. ManipulationCapabilities is a CHOICE between three options. OdaApplicationCapabilities is a SEQUENCE of three data elements. DfrCapabilities is a SEQUENCE of two data elements. BilateralInformation is a SEQUENCE of two data elements. ApplicationRequirements is a CHOICE between two options.

Copyright International Organization for Standardization
Provided by IHS under license with ISO
No reproduction or networking permitted without license from IHS
Not for Resale

Ref.	Argument	B	P	Constraint / value
1	dtamProtocolVersion	o	o	The value shall be equal to 'version-1'
2	dtamManipulationCapabilities	m	m	
2.1	profileSelection	o.1	m	The value shall be equal to '{iso standard 15121 3}'
2.2	manipulationLevelSelection	o.1	x	
2.3	bilateralAgreement	o.1	x	
3	odaApplicationCapabilities	o	m	
3.1	odaDocumentApplicationProfile	m	m	
3.2	nonBasicOdaDocumentCharacteristics	o	x	
3.3	nonBasicOdaStructuralCharacteristics	o	x	
4	dfrCapabilities	o	o	
4.1	dfrProtocolVersion	o	o	
4.2	dfrProfile	o	m	
5	bilateralInformation	o	o	
5.1	serverName	m	m	
5.2	information	m	m	
6	applicationRequirements	o	o	

o.1: One and only one of the three marked items shall be selected.

6.2.19.3 DTAM-DM DTAM-DMBind results

The specifications provided in ISO/IEC ISP 15121-1, subclause 6.2.9.3 apply.

6.2.20 DTAM-DM DTAM-DMUnBind

The specifications provided in ISO/IEC ISP 15121-1, subclause 6.2.10 apply.

7 Errors returned

These tables define the possible errors, as defined in ITU-T Rec. 413 | ISO/IEC 8613-3 and ITU-T Rec. T.435, for all AI and DTAM-DM operations supported by this part of ISO/IEC ISP 15121.

7.1 'AI errors', 'DTAM-DM errors' and 'DTAM-DMBind / DTAM-DMUnBind errors' tables conventions

The specifications provided in ISO/IEC ISP 15121-1, subclause 7.1 apply.

Copyright International Organization for Standardization
Provided by IHS under license with ISO
No reproduction or networking permitted without license from IHS Not for Resale

7.2 AI errors

7.2.1 AI errors table

The AI errors are defined in ITU-T Rec. 413 | ISO/IEC 8613-3. The following table specifies those errors supported by the AI operations supported by this part of ISO/IEC ISP 15121. The symbols used in the table are defined in subclause 7.1.

For errors of the operations not included in this table, The specifications provided in ISO/IEC ISP 15121-1, subclause 6.2.1 and the specifications provided in ISO/IEC ISP 15121-2, subclause 7.2.1 apply.

AI Error	Delete	Modify	Replace	Move	BeginGroup	EndGroup
Error in the constituents	--	--	√	--	--	--
Invalid location expression or document	√	√	√	--	--	--
Location expression does not match	x	x	x	--	--	--
Document fragments reserved	√	√	√	--	--	--
Improper access rights	√	√	√	√	--	--
Document is not open	√	√	√	--	--	--
Unspecified error	√	√	√	√	√	√
Invalid source location expression or document	--	--	--	√	--	--
Invalid target location expression or document	--	--	--	√	--	--
Source location expression does not match	--	--	--	x	--	--
Target location expression does not match	--	--	--	x	--	--
Source region reserved	--	--	--	√	--	--
Target region reserved	--	--	--	√	--	--
Source document is not open	--	--	--	√	--	--
Target document is not open	--	--	--	√	--	--
Error in the attributes	--	√	--	--	--	--
Invocation identifier duplicated	--	--	--	--	x	--
No BeginGroup	--	--	--	--	--	x

Copyright International Organization for Standardization
Provided by IHS under license with ISO
No reproduction or networking permitted without license from IHS
Not for Resale

7.2.2 AI errors mapping

The following table specifies the mapping between the AI errors supported by ITU-T Rec. T.413 | ISO/IEC 8613-3 but not supported by this part of ISO/IEC ISP 15121, and those supported by this part of ISO/IEC ISP 15121.

For errors not included in this table, the specifications provided in ISO/IEC ISP 15121-1, table in subclause 7.2.2 and the specifications provided in ISO/IEC ISP 15121-2, table in subclause 7.2.2 apply.

AI error not supported by this part of ISO/IEC ISP 15121	Equivalent AI error supported by this part of ISO/IEC ISP 15121
Invocation identifier duplicated	Unspecified error
No BeginGroup	Unspecified error

Copyright International Organization for Standardization
Provided by IHS under license with ISO
No reproduction or networking permitted without license from IHS
Not for Resale

7.3 DTAM-DM errors

The DTAM-DM errors are defined in ITU-T Rec. 435. The following table specifies those errors supported by the operations supported by this part of ISO/IEC ISP 15121. The symbols used in the table are defined in subclause 7.1.

For errors of the operations not included in this table, the specifications provided in ISO/IEC ISP 15121-1, table in subclause 7.3 and the specifications provided in ISO/IEC ISP 15121-2, table in subclause 67.3 apply.

DTAM-DM Error	DM-DELETE	DM-MODIFY	DM-REPLACE	DM-MOVE	DM-GROUP-BEGIN	DM-GROUP-END
DM-ServiceError (server-busy)	x	x	x	x	x	x
DM-ServiceError (server-unavailable)	x	x	x	x	x	x
DM-ServiceError (resource-limit-exceeded)	x	x	x	x	x	x
DM-ServiceError (operation-too-complex)	x	x	x	x	x	x
DM-ServiceError (unclassified-server-error)	√	√	√	√	√	√
DM-DocumentError (DocumentId, invalid-upi)	x	x	x	x	--	--
DM-DocumentError (DocumentId, invalid-path-name)	x	x	x	x	--	--
DM-DocumentError (DocumentId, ambigous-path-name)	x	x	x	x	--	--
DM-DocumentError (DocumentId, invalid-document-reference)	x	x	x	x	--	--
DM-DocumentError (DocumentId, invalid-document-name)	x	x	x	x	--	--
DM-DocumentError (DocumentId, invalid-non-permanent-id)	x	x	x	x	--	--
DM-AccessError (DocumentId, document-already-open)	--	--	--	--	--	--
DM-AccessError (DocumentId, document-not-opened)	√	√	√	√	--	--
DM-AccessError (DocumentId, improper-access-rights)	x	x	x	x	--	--
DM-AccessError (ManipulationObject, reserved-by-a-user)	√	√	√	√	--	--
DM-AccessError (ManipulationObject, improper-acccess-rights)	√	√	√	√	--	--
DM-FragmentError (ObjectValue, invalid-location-expression)	√	√	√	√	--	--

Copyright International Organization for Standardization
Provided by IHS under license with ISO
No reproduction or networking permitted without license from IHS
Not for Resale

DM-FragmentError (ObjectValue, invalid-expression)	x	x	x	x	--	--
DM-AttributeError (ManipulationObject, odaAttributeValue, invalid-syntax)	x	x	x	x	--	--
DM-AttributeError (ManipulationObject, odaAttributeValue, constraint-violation)	x	x	x	x	--	--
DM-AttributeError (ManipulationObject, odaAttributeValue, illegal-violation)	x	√	x	x	--	--
DM-AttributeError (ManipulationObject, anyAttributeValue, invalid-syntax)	x	x	x	x	--	--
DM-AttributeError (ManipulationObject, anyAttributeValue, constraint-violation)	x	x	x	x	--	--
DM-AttributeError (ManipulationObject, anyAttributeValue, illegal-violation)	x	x	x	x	--	--
DM-UpdateError (ManipulationObject, illegal-modification)	x	x	√	x	--	--

7.4 DTAM-DMBind / DTAM-DMUnBind errors

The specifications provided in ISO/IEC ISP 15121-1, subclause 7.4 apply.

7.5 'Mapping between AI and DTAM-DM errors' table conventions

The specifications provided in ISO/IEC ISP 15121-1, subclause 7.5 apply.

7.6 Mapping between AI and DTAM-DM errors

The following table specifies, for all the AI operations supported by this part of ISO/IEC ISP 15121, the mapping of AI Errors into DTAM-DM Errors supported by this part of ISO/IEC ISP 15121. The symbols used in the table are defined in subclause 7.5.

For all AI errors allowed in this part of ISO/IEC ISP 15121, an equivalent DTAM-DM error is given. This means that when an error is produced when performing an AI operation in the ODA document manipulation server, this error shall be mapped into the DTAM-DM one given in the table. Then, it shall be returned, by DTAM-DM protocol, to the ODA document manipulation client.

For errors of the operations not included in this table, the specifications provided in ISO/IEC ISP 15121-1, table in subclause 7.6 and the specifications provided in ISO/IEC ISP 15121-2, table in subclause 7.6 apply.

Copyright International Organization for Standardization
Provided by IHS under license with ISO
No reproduction or networking permitted without license from IHS
Not for Resale

AI Error	Equivalent DTAM Error	Delete	Modify	Replace	Move	BeginGroup	EndGroup
Error in the constituents	DM-UpdateError (ManipulationObject, illegal-modification)	--	--	√	--	--	--
Invalid location expression or document	DM-FragmentError (ObjectValue, invalid-location-expression)	√	√	√	--	--	--
Document fragments reserved	DM-AccessError (ManipulationObject, reserved-by-a-user)	√	√	√	--	--	--
Improper access rights	DM-AccessError (ManipulationObject, improper-access-rights)	√	√	√	√	--	--
Document is not open	DM-AccessError (DocumentId, document-not-opened)	√	√	√	--	--	--
Unspecified error	DM-ServiceError (unclassified-server-error)	√	√	√	√	√	√
Invalid source location expression or document	DM-FragmentError (ObjectValue, invalid-location-expression)	--	--	--	√	--	--
Invalid target location expression or document	DM-FragmentError (ObjectValue, invalid-location-expression)	--	--	--	√	--	--
Source region reserved	DM-AccessError (DocumentId, reserved-by-a-user)	--	--	--	√	--	--
Target region reserved	DM-AccessError (DocumentId, reserved-by-a-user)	--	--	--	√	--	--
Source document is not open	DM-AccessError (DocumentId, document-not-opened)	--	--	--	√	--	--
Target document is not open	DM-AccessError (DocumentId, document-not-opened)	--	--	--	√	--	--
Error in the attributes	DM-AttributeError (ManipulationObject, odaAttributeValue, illegal-violation)	--	√	--	--	--	--

Copyright International Organization for Standardization
Provided by IHS under license with ISO
No reproduction or networking permitted without license from IHS
Not for Resale

7.7 'Mapping between DTAM-DM and AI errors' table conventions

The specifications provided in ISO/IEC ISP 15121-2, subclause 7.7 apply.

7.8 Mapping between DTAM-DM and AI errors

The following table specifies, for all the DTAM-DM operations supported by this part of ISO/IEC ISP 15121, the mapping of DTAM-DM errors into AI errors supported by this part of ISO/IEC ISP 15121. The symbols used in the table are defined in subclause 7.7.

For all DTAM-DM errors allowed in this part of ISO/IEC ISP 15121, an equivalent AI error is given. This means that when the ODA document manipulation client receives an error, through DTAM protocol, this error shall be mapped into the AI one given in the table.

For errors of the operations not included in this table, The specifications provided in ISO/IEC ISP 15121-1, table in subclause 7.8 and the specifications provided in ISO/IEC ISP 15121-2, table in subclause 7.8 apply.

Copyright International Organization for Standardization
Provided by IHS under license with ISO
No reproduction or networking permitted without license from IHS Not for Resale

DTAM Error	Equivalent AI Error	DM-DELETE	DM-MODIFY	DM-REPLACE	DM-MOVE	DM-GROUP-BEGIN	DM-GROUP-END
DM-ServiceError (unclassified-server-error)	Unspecified error	√	√	√	√	√	√
DM-AccessError (DocumentId, document-not-opened)	Document is not open	√	√	√	--	--	--
	Source document is not open	--	--	--	√	--	--
	Target document is not open						
DM-AccessError (ManipulationObject, reserved-by-a-user)	Document fragments reserved	√	√	√	--	--	--
	Source region reserved	--	--	--	√	--	--
	Target region reserved						
DM-AccessError (ManipulationObject, improper-access-rights)	Improper access rights	√	√	√	√	--	--
DM-FragmentError (ObjectValue, invalid-location-expression)	Invalid location expression or document	√	√	√	--	--	--
	Invalid source location expression or document	--	--	--	√	--	--
	Invalid target location expression or document						
DM-AttributeError (ManipulationObject, odaAttributeValue, illegal-violation)	Error in the attributes	--	√	--	--	--	--
DM-UpdateError (ManipulationObject, illegal-modification)	Error in the constituents	--	--	√	--	--	--

8 DTAM-TK Services

8.1.1 DTAM-DM TK-TOKEN-PLEASE

8.1.1.1 General Restrictions

There are no general restrictions for the DTAM-TK TK-TOKEN-PLEASE operation.

Copyright International Organization for Standardization
Provided by IHS under license with ISO
No reproduction or networking permitted without license from IHS
Not for Resale

8.1.1.2 DTAM-DM TK-TOKEN-PLEASE arguments

The following table defines the DTAM-TK TK-TOKEN-PLEASE operation arguments as defined in ITU-T Rec. T.435, and those supported by this part of ISO/IEC ISP 15121. The symbols used in the table are defined in subclause 6.2.1.

The argument of the DTAM-DM TK-TOKEN-PLEASE operation is a NULL.

Ref.	Result	B	P	Constraint / value
1	null	m	m	

8.1.1.3 DTAM-TK TK-TOKEN-PLEASE results

The following table defines the DTAM-TK TK-TOKEN-PLEASE operation results as defined in ITU-T Rec. T.435, and those supported by this part of ISO/IEC ISP 15121. The symbols used in the table are defined in subclause 6.2.1.

The result of the DTAM-DM TK-TOKEN-PLEASE operation is a NULL.

Ref.	Result	B	P	Constraint / value
1	null	m	m	

8.1.2 DTAM-TK TK-TOKEN-GIVE

8.1.2.1 General Restrictions

There are no general restrictions for the DTAM-TK TK-TOKEN-GIVE operation.

8.1.2.2 DTAM-TK TK-TOKEN-GIVE arguments

The following table defines the TK TK-TOKEN-GIVE operation arguments as defined in ITU-T Rec. T.435, and those supported by this part of ISO/IEC ISP 15121. The symbols used in the table are defined in subclause 6.2.1.

The argument of the DTAM-DM TK-TOKEN-GIVE operation is a NULL.

Ref.	Result	B	P	Constraint / value
1	null	m	m	

8.1.2.3 DTAM-TK TK-TOKEN-GIVE results

The following table defines the TK TK-TOKEN-GIVE operation results as defined in ITU-T Rec. T.435, and those supported by this part of ISO/IEC ISP 15121. The symbols used in the table are defined in subclause 6.2.1.

The result of the DTAM-DM TK-TOKEN-GIVE operation is a NULL.

Copyright International Organization for Standardization
Provided by IHS under license with ISO
No reproduction or networking permitted without license from IHS Not for Resale

Ref.	Result	B	P	Constraint / value
1	null	m	m	

9 DTAM-TK Errors

9.1.1 TK-TOKEN-PLEASE / TK-TOKEN-GIVE errors table

The DTAM-DM errors are defined in ITU-T Rec. 435. The following table specifies those errors supported by this part of ISO/IEC ISP 15121 for the TK-TOKEN-PLEASE and TK-TOKEN-GIVE operations. The symbols used in the table are defined in subclause 7.1.

TK-TOKEN-PLEASE and TK-TOKEN-GIVE operations are independent from AI.

TK-TOKEN-PLEASE / TK-TOKEN-GIVE Error	TK-TOKEN-PLEASE	TK-TOKEN-GIVE
DM-ServiceError (server-busy)	x	x
DM-ServiceError (server-unavailable)	x	x
DM-ServiceError (resource-limit-exceeded)	x	x
DM-ServiceError (operation-too-complex)	x	x
DM-ServiceError (unclassified-server-error)	√	√

9.1.2 TK-TOKEN-PLEASE / TK-TOKEN-GIVE errors mapping

The following table specifies the mapping between TK-TOKEN-PLEASE / TK-TOKEN-GIVE errors supported by ITU-T Rec. T.435, but not supported by this part of ISO/IEC ISP 15121, and those supported by ITU-T Rec. T.435 and this part of ISO/IEC ISP 15121.

TK-TOKEN-PLEASE / TK-TOKEN-GIVE error not supported by this ISP	Equivalent TK-TOKEN-PLEASE / TK-TOKEN-GIVE error supported by this ISP
DM-ServiceError (server-busy)	DM-ServiceError (unclassified-server-error)
DM-ServiceError (resource-limit-exceeded)	DM-ServiceError (unclassified-server-error)
DM-ServiceError (operation-too-complex)	DM-ServiceError (unclassified-server-error)
DM-ServiceError (server-unavailable)	DM-ServiceError (unclassified-server-error)

Copyright International Organization for Standardization
Provided by IHS under license with ISO
No reproduction or networking permitted without license from IHS Not for Resale

10 Constraints on location expression

The specifications provided in ISO/IEC ISP 15121-1, clause 8 apply.

11 Constraints for the DTAM confirmed document manipulation protocol

11.1 Asymmetric document applications

The specifications provided in ISO/IEC ISP 15121-1, clause 9 apply.

11.2 Symmetric document applications

The communication between the ODA document manipulation client and the ODA document manipulation server shall be done using DTAM-DM and DTAM-TK protocols, as specified in ITU-T Rec. T.436, with the constraints in the service specified in clauses 6 and 7 of this part of ISO/IEC ISP 15121.

The DTAM-DM/DTAM-TK combined application context shall be supported.

11.3 Use of ROSE

The constraints on ROSE services specified in ISO/IEC ISP 11188-2 shall be applied.

11.4 Use of ACSE, Presentation and Session

The constraints on ACSE, Presentation and Session services specified in ISO/IEC ISP 11188-3 shall be applied, together with those specified in Annex A of this part of ISO/IEC ISP 15121.

Copyright International Organization for Standardization
Provided by IHS under license with ISO
No reproduction or networking permitted without license from IHS Not for Resale

Annex A
(normative)
Profile requirements list

The specifications provided in ISO/IEC ISP 15121-1, Annex A apply.

Copyright International Organization for Standardization
Provided by IHS under license with ISO
No reproduction or networking permitted without license from IHS
Not for Resale

Annex B
(informative)
Object Identifiers List

The specifications provided in ISO/IEC ISP 15121-1, Annex B apply.

Copyright International Organization for Standardization
Provided by IHS under license with ISO
No reproduction or networking permitted without license from IHS
Not for Resale

Annex C
(informative)
Use of DM-POINT in ISO/IEC 15121

C.1 User Requirements and Scenario

C.1.1 Asymmetric document applications

The specifications provided in ISO/IEC ISP 15121-1, Annex C, subclause C.1 apply.

C.1.2 Symmetric document applications

The second model used in this annex of this part of ISO/IEC ISP 15121 is that of symmetric remote document applications using services provided by the Abstract Interface for the manipulation of ODA documents (AI), in combination with DTAM confirmed document manipulation (DTAM-DM), including DM-POINT services and protocols, and DTAM-Token Exchange (DTAM-TK) services and protocols, in order to get access to a remote ODA document.

In this model, the manipulating applications will be called *ODA document manipulation users*, that will remotely access for document interactive manipulation. One (or both) ODA user application(s) will store the documents, and both user applications will be able to perform the operations on them. Additionally, a token will be exchanged between the applications.

Figure 3 illustrates the environment within which this annex C of this part of ISO/IEC ISP 15121 is applicable.

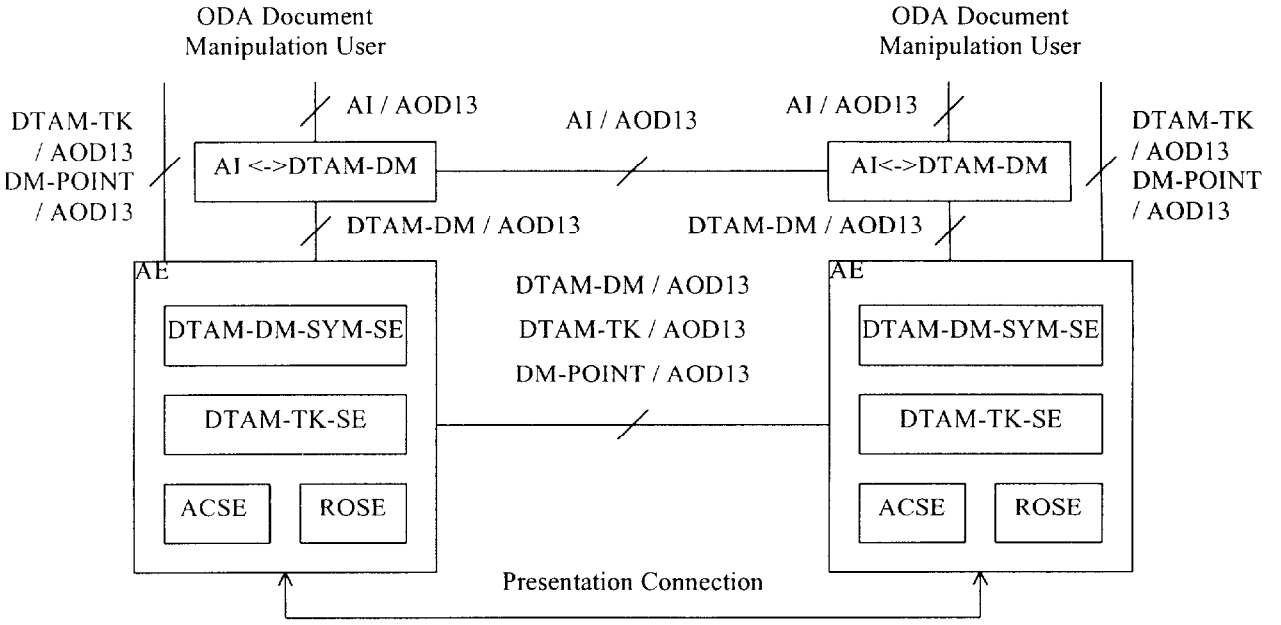

Legend:

ACSE	Association Control Service Element
AE	Application Entity
AI	Abstract Interface for the manipulation of ODA documents
AI/AOD13	Abstract Interface for the manipulation of ODA documents following AOD13 profile
DM-POINT	DM-POINT operation.
DM-POINT/AOD13	DM-POINT operation following AOD13 profile
DTAM-DM	Document Transfer And Manipulation - Confirmed Document Manipulation

Copyright International Organization for Standardization
Provided by IHS under license with ISO
No reproduction or networking permitted without license from IHS
Not for Resale

DTAM-DM/AOD13	Document Transfer And Manipulation - Confirmed Document Manipulation following AOD13 profile
DTAM-DM-SYM-SE	Document Transfer And Manipulation - Confirmed Document Manipulation Symmetric Service Element
DTAM-TK	Document Transfer And Manipulation – Token Exchange
DTAM-TK/AOD13	Document Transfer And Manipulation – Token Exchange following AOD13 profile
DTAM-TK-SE	Document Transfer And Manipulation - Token Exchange Service Element
ROSE	Remote Operations Service Element

Figure 3 - AOD13 Symmetric document applications environment when using DTAM-DM DM-POINT in ISO/IEC 15121

C.2 DTAM-DM DM-POINT Services

The specifications provided in ISO/IEC ISP 15121-2, Annex C, subclause C.2 apply.

C.3 DTAM-DM DM-POINT Errors

The specifications provided in ISO/IEC ISP 15121-1, Annex C, subclause C.3 apply.

Copyright International Organization for Standardization
Provided by IHS under license with ISO
No reproduction or networking permitted without license from IHS Not for Resale

© ISO/IEC

ICS 35.100.05

Descriptors: data processing, information interchange, network interconnection, open systems interconnection, text communication, communication procedure, documents, document architecture.

Price based on 40 pages

Copyright International Organization for Standardization
Provided by IHS under license with ISO
No reproduction or networking permitted without license from IHS

Not for Resale