INTERNATIONAL STANDARDIZED PROFILE ISO/IEC ISP 10610-1:1993
TECHNICAL CORRIGENDUM 1
Published 1998-04-15

INTERNATIONAL ORGANIZATION FOR STANDARDIZATION • МЕЖДУНАРОДНАЯ ОРГАНИЗАЦИЯ ПО СТАНДАРТИЗАЦИИ • ORGANISATION INTERNATIONALE DE NORMALISATION
INTERNATIONAL ELECTROTECHNICAL COMMISSION • МЕЖДУНАРОДНАЯ ЭЛЕКТРОТЕХНИЧЕСКАЯ КОМИССИЯ • COMMISSION ÉLECTROTECHNIQUE INTERNATIONALE

Information technology — International Standardized Profile FOD11 — Open Document Format: Simple document structure — Character content architecture only —

Part 1:
Document Application Profile (DAP)

TECHNICAL CORRIGENDUM 1

Technologies de l'information — Profil normalisé international FOD11 — Format de document ouvert: Structure de document simple — Architecture du contenu des caractères seulement —

Partie 1: Profil du document d'application (DAP)

RECTIFICATIF TECHNIQUE 1

Technical Corrigendum 1 to International Standardized Profile ISO/IEC ISP 10610-1:1993 was prepared by Joint Technical Committee ISO/IEC JTC 1, *Information technology*.

This material is reproduced from ISO documents under International Organization for Standardization (ISO) Copyright License number IHS/ICC/1996. Not for resale. No part of these ISO documents may be reproduced in any form, electronic retrieval system or otherwise, except as allowed in the copyright law of the country of use, or with the prior written consent of ISO (Case postale 56, 1211 Geneva 20, Switzerland, Fax +41 22 734 10 79), IHS or the ISO Licensor's members.

Page 12

In **6.3.4.3**, Table 1, entry for row "Page type" ISO A5, column "ARA in BMUs", replace:

not defined

by:

6 600 x 9 240

ICS 35.100.05 **Ref. No. ISO/IEC ISP 10610-1:1993/Cor.1:1998(E)**

Descriptors: data processing, text processing, information interchange, documentation, documents, document architecture, logical structure, layout, formats, profiles.

© **ISO/IEC 1998**

Printed in Switzerland

Copyright International Organization for Standardization
Provided by IHS under license with ISO
No reproduction or networking permitted without license from IHS
Not for Resale

Page 13

In **6.3.4.5**, paragraph 3, replace:

> Also, these three areas shall be entirely contained within the page area and shall not overlap.

by:

> Also, these three areas shall be entirely contained within the page area and shall not share any common areas, although adjacent edges may be coincident.

Page 14

In **6.3.5.2**, replace:

> The position and dimensions of the frame are fixed.

by:

> The position and dimensions of the frame are fixed. It is required that the attributes "position" and "dimensions" apply to the constituent.

Page 15

In **6.3.6.2**, in paragraph 2, replace:

> These types of frame have fixed position and dimensions.

by:

> These types of frame have fixed position and dimensions. It is required that the attributes "position" and "dimensions" apply to the constituent.

In **6.3.7**, paragraph 2, the second line, replace:

> and result from the layout of basic logical objects into lowest level frames

by:

> and result from the layout of the content associated with basic logical objects into lowest level frames

In **6.4**, paragraph 1, the first line, replace:

> controlling the allocation of logical constituents

by:

> controlling the allocation of content associated with logical objects

Copyright International Organization for Standardization
Provided by IHS under license with ISO
No reproduction or networking permitted without license from IHS Not for Resale

In **6.4.1**, paragraph 1, replace:

control the allocation of constituent constraints

by:

control the allocation of content associated with logical objects

In **6.4.1.1**, paragraph 1, replace:

allocating the constituent constraint associated with the body part

by:

allocating the content associated with the logical object within the body part

In **6.4.1.2**, paragraph 1, the first line, replace:

allocating the constituent constraint associated with the body part

by:

allocating the content associated with the logical object within the body part

Page 16

In **6.4.1.2.1**, paragraph 1, the first line, replace:

that a particular logical constituent constraint in a document is to be laid out

by:

that the content associated with a particular logical object in a document is to be laid out

In **6.4.1.2.1**, paragraph 3, the second line, replace:

that the logical constituent constraint is to be laid out

by:

that the content associated with the logical object is to be laid out

In **6.4.1.2.1**, paragraph 3, the third line, replace:

that the logical constituent constraint is to be laid out

by:

that the content associated with the logical object is to be laid out

Copyright International Organization for Standardization
Provided by IHS under license with ISO
No reproduction or networking permitted without license from IHS Not for Resale

In **6.4.1.2.2**, paragraph 1, the first line, replace:

> whether or not a logical object derived from a basic or composite logical constituent constraints is allowed to be split over

by:

> whether or not the content associated with a logical object derived from a basic or composite logical constituent constraint is allowed to be split over

In **6.4.1.4**, paragraph 1, the second line, replace:

> which indicates the particular instance of the logical constituent constraint of the type CommonContent (see 6.2.4.1) that is to be laid out

by:

> which indicates the content associated with the particular instance of the logical constituent constraint of the type CommonContent (see 6.2.4.1) that is to be laid out

Page 35

In **7.1.3**, add:

> d) [Clarification]
> The notation used for construction expressions in clause 7 in general allow an empty set of subordinates. Such empty sets of subordinates shall not occur in data streams adhering to this Specification.

Page 49

In **7.4.2.3**, add comment, under Position;

> -- In the specific structure, a constituent shall specify the attribute "position" if, and only if, the attribute is not specified for the corresponding generic definition. In the generic structure of a document with no specific layout structure, the attribute "position" shall be specified by the generic constituent. --

In **7.4.2.3**, add comment, under Dimensions:

> -- In the specific structure, a constituent shall specify the attribute "dimensions" if, and only if, the attribute is not specified for the corresponding generic definition. In the generic structure of a document with no specific layout structure, the attribute "dimensions" shall be specified by the generic constituent. --

Copyright International Organization for Standardization
Provided by IHS under license with ISO
No reproduction or networking permitted without license from IHS Not for Resale

Page 50

In **7.4.3.2**, replace:

```
REQ   Subordinates   {SUB_ID_OF(Page)+,
                      SUB_ID_OF(RectoPage)+,
                      SUB_ID_OF(VersoPage)+},
```

by:

```
REQ   Subordinates   { { SUB_ID_OF(Page) |
                        SUB_ID_OF(RectoPage) |
                        SUB_ID_OF(VersoPage) }...}
```


Copyright International Organization for Standardization
Provided by IHS under license with ISO
No reproduction or networking permitted without license from IHS
Not for Resale

ISP*10610 PT*1 93 ■ 4851903 0548291 72T ■

INTERNATIONAL STANDARDIZED PROFILE

ISO/IEC ISP 10610-1

First edition
1993-11-01

Information technology — International Standardized Profile FOD11 — Open Document Format: Simple document structure — Character content architecture only —

Part 1:
Document Application Profile (DAP)

Technologies de l'information — Profil normalisé international FOD11 — Format de document ouvert: Structure de document simple — Architecture du contenu des caractères seulement —

Partie 1: Profil du document d'application (DAP)



Reference number
ISO/IEC ISP 10610-1:1993(E)

Copyright International Organization for Standardization
Provided by IHS under license with ISO
No reproduction or networking permitted without license from IHS
Not for Resale

Contents

Foreword viii

Introduction ix

1 Scope 1

2 Normative references 2
2.1 Paired Recommendations | International Standards equivalent in technical content 2
2.2 Additional references 3

3 Definitions 4

4 Relationship with other International Standardized Profiles 5

5 Conformance 5
5.1 Data stream conformance 5
5.2 Implementation conformance 6

6 Characteristics supported by this document application profile 6
6.1 Overview 6
6.1.1 General 6
6.1.2 Formatted form documents 6
6.1.3 Processable form documents 7
6.1.4 Formatted processable form documents 7
6.2 Logical characteristics 8
6.2.1 Introduction 8
6.2.2 Overview of the logical structure 8
6.2.3 Body part of the logical structure 8
6.2.3.1 DocumentLogicalRoot 8
6.2.3.2 Passage 8
6.2.3.3 BodyText 9
6.2.4 Common content part of the logical structure 9
6.2.4.1 CommonContent 9
6.2.4.2 CommonText 9
6.2.4.3 PageNumber 9
6.3 Layout characteristics 10
6.3.1 Overview of the layout characteristics 10
6.3.2 DocumentLayoutRoot 10
6.3.3 PageSet 10
6.3.4 Page characteristics 11
6.3.4.1 Page constituents 11
6.3.4.2 Page dimensions 11
6.3.4.3 Nominal Page sizes 12
6.3.4.4 Page offset 12
6.3.4.5 Page layout characteristics 12
6.3.5 Body area characteristics 14
6.3.5.1 General characteristics 14
6.3.5.2 BasicBody 14

© ISO/IEC 1993
All rights reserved. No part of this publication may be reproduced or utilized in any form or by any means, electronic or mechanical, including photocopying and microfilm, without permission in writing from the publisher.

ISO/IEC Copyright Office • Case Postale 56 • CH-1211 Genève 20 • Switzerland

Printed in Switzerland

Copyright International Organization for Standardization
Provided by IHS under license with ISO
No reproduction or networking permitted without license from IHS
Not for Resale

6.3.6 Header and footer area characteristics 14
6.3.6.1 General characteristics 14
6.3.6.2 BasicHeader and BasicFooter 15
6.3.7 SpecificBlock 15
6.4 Document layout characteristics 15
6.4.1 Flow controls 15
6.4.1.1 Allocation of content to page sets 15
6.4.1.2 Allocation of content to page 15
6.4.1.2.1 New layout object 16
6.4.1.2.2 Indivisibility 16
6.4.1.2.3 Same layout object 16
6.4.1.3 Allocation of content to body areas 16
6.4.1.4 Allocation of content to header-footer areas 16
6.4.1.4.1 Concatenation 16
6.4.2 Layout of the document content 17
6.4.2.1 Margins 17
6.4.2.2 Separation 18
6.4.3 Layout controls applicable in the absence of a generic layout structure 18
6.5 Content layout and imaging characteristics 18
6.5.1 Introduction 18
6.5.2 Character content architecture class 19
6.5.3 Character repertoire 19
6.5.4 Code extension techniques 20
6.5.5 Line spacing 22
6.5.6 Character spacing 22
6.5.7 Character path and line progression 22
6.5.8 Character orientation 22
6.5.9 Emphasis 22
6.5.10 Tabulation 23
6.5.11 Indentation 24
6.5.12 Alignment 24
6.5.13 First line format 24
6.5.14 Widow and orphan sizes 25
6.5.15 Reverse character string 25
6.5.16 Superscripts and subscripts 25
6.5.17 Line breaks 25
6.5.18 Substitution of characters 26
6.5.19 Initial point 26
6.5.20 Use of control functions 26
6.5.21 Formatting the content 26
6.6 Miscellaneous features 26
6.6.1 Application comments 26
6.6.2 Alternative representation 27
6.6.3 Page numbering 28
6.6.4 User readable comments 28
6.6.5 User visible name 29
6.7 Document management features 29
6.7.1 Document constituent information 29
6.7.1.1 Presence of document constituents 29
6.7.2 Document identification information 29
6.7.2.1 Document application profile information 30
6.7.2.2 Document architecture class information 30
6.7.2.3 Content architecture classes information 30
6.7.2.4 Interchange format class information 30
6.7.2.5 ODA version information 30
6.7.2.6 Document reference 30
6.7.3 Document default information 30
6.7.4 Non-basic characteristics information 30

Copyright International Organization for Standardization
Provided by IHS under license with ISO
No reproduction or networking permitted without license from IHS
Not for Resale

6.7.4.1 Profile character sets 31
6.7.4.2 Comments character sets 31
6.7.4.3 Alternative representation character sets 32
6.7.5 Document management attributes 32

7 Specification of constituent constraints 33
7.1 Introduction 33
7.1.1 Diagrams of relationships of logical constituents 33
7.1.2 Diagrams of relationships of layout constituents 34
7.1.3 Notation 35
7.2 Document profile constituent constraints 36
7.2.1 Macro definitions 36
7.2.2 Constituent constraints 41
7.2.2.1 DocumentProfile 41
7.3 Logical constituent constraints 44
7.3.1 Macro definitions 44
7.3.2 Factor constraints 44
7.3.2.1 FACTOR ANY-LOGICAL 44
7.3.3 Constituent constraints 45
7.3.3.1 DocumentLogicalRoot 45
7.3.3.2 Passage 45
7.3.3.3 BodyText 45
7.3.3.4 CommonContent 46
7.3.3.5 CommonText 46
7.3.3.6 PageNumber 46
7.4 Layout constituent constraints 47
7.4.1 Macro definitions 47
7.4.2 Factor constraints 48
7.4.2.1 FACTOR ANY-COMPOSITE-LAYOUT 48
7.4.2.2 FACTOR ANY-PAGE 48
7.4.2.3 FACTOR ANY-FRAME 49
7.4.3 Constituent constraints 49
7.4.3.1 DocumentLayoutRoot 49
7.4.3.2 PageSet 50
7.4.3.3 Page 50
7.4.3.4 RectoPage 50
7.4.3.5 VersoPage 51
7.4.3.6 BasicHeader 51
7.4.3.7 BasicBody 51
7.4.3.8 BasicFooter 52
7.4.3.9 SpecificBlock 52
7.5 Layout style constituent constraints 53
7.5.1 Macro definitions 53
7.5.2 Factor constraints 53
7.5.2.1 FACTOR ANY-LAYOUT-STYLE 53
7.5.3 Constituent constraints 53
7.5.3.1 L-Style1 53
7.5.3.2 L-Style2 53
7.5.3.3 L-Style3 54
7.6 Presentation style constituent constraints 54
7.6.1 Macro definitions 54
7.6.2 Factor constituent constraints 54
7.6.2.1 FACTOR ANY-PRESENTATION-STYLE 54
7.6.3 Constituent constraints 55
7.6.3.1 P-Style1 55
7.6.3.2 P-Style2 55
7.6.3.3 P-Style3 55
7.6.3.4 P-Style4 55
7.7 Content portion constituent constraints 56

Copyright International Organization for Standardization
Provided by IHS under license with ISO
No reproduction or networking permitted without license from IHS
Not for Resale

ISP*10610 PT*1 93 ■ 4851903 0548295 375 ■

7.7.1 Macro definitions 56
7.7.2 Factor constraints 56
7.7.3 Constituent constraints 56
7.7.3.1 Character-content-portion 56

8 Interchange format 58
8.1 Interchange format class A 58
8.1.1 Interchange format 58
8.1.2 Document application profile object identifier 58
8.1.3 Encoding of application comments 58
8.1.4 Data lengths 58
8.2 Interchange format SDIF 58
8.2.1 Interchange format 58
8.2.2 Document application profile object identifier 59
8.2.3 Encoding of application comments 59

Annexes

A Amendments and technical corrigenda 60
A.1 Amendments 60
A.1.1 Amendments to the base standard 60
A.1.2 Proposed changes to standards due to defects 60
A.2 Technical corrigenda 61
A.2.1 Technical corrigenda to this International Standardized Profile 61
A.3 Versions of the ODA International Standard 61

B Recommended practices 62
B.1 Transfer methods for ODA 62
B.1.1 Conveyance of ODA over CCITT X.400-1984 62
B.1.2 Conveyance of ODA over FTAM 62
B.1.3 Conveyance of ODA over DTAM 62
B.1.4 Conveyance of ODA over flexible disks 63
B.2 Interoperability with SGML applications 63

C Bibliography 64

Copyright International Organization for Standardization
Provided by IHS under license with ISO
No reproduction or networking permitted without license from IHS
Not for Resale

List of figures

Figure 1 Page layout (portrait orientation) 13
Figure 2 Page layout (landscape orientation) 14
Figure 3 Specification of margins 17
Figure 4 Code extension features (basic case) 21
Figure 5 Code extension features (all possible cases) 21
Figure 6 The body part of the generic logical structure 33
Figure 7 The common part of the generic logical structure 33
Figure 8 The layout structure - document root and page sets 34
Figure 9 The layout structure - page structure 34

--`,,`-`-`,,`,,`,`,,`---
Copyright International Organization for Standardization
Provided by IHS under license with ISO
No reproduction or networking permitted without license from IHS
Not for Resale

List of tables

Table 1 Nominal page sizes 12
Table 2 List of constituent constraint numeric identifier 27
Table 3 Symbols to denote shift functions 35

Copyright International Organization for Standardization
Provided by IHS under license with ISO
No reproduction or networking permitted without license from IHS
Not for Resale

Foreword

ISO (the International Organization for Standardization) and IEC (the International Electrotechnical Commission) form the specialized system for worldwide standardization. National bodies that are members of ISO or IEC participate in the development of International Standards through technical committees established by the respective organization to deal with particular fields of technical activity. ISO and IEC technical committees collaborate in fields of mutual interest. Other international organizations, governmental and non-governmental, in liaison with ISO and IEC, also take part in the work.

In the field of information technology, ISO and IEC have established a joint technical committee, ISO/IEC JTC 1. In addition to developing International Standards, ISO/IEC JTC 1 has created a Special Group on Functional Standardization for the elaboration of International Standardized Profiles.

An International Standardized Profile is an internationally agreed, harmonized document which identifies a standard or group of standards, together with options and parameters, necessary to accomplish a function or set of functions.

Draft International Standardized Profiles are circulated to national bodies for voting. Publication as an International Standardized Profile requires approval by at least 75 % of the national bodies casting a vote.

International Standardized Profile ISO/IEC ISP 10610-1 was prepared with the collaboration of

- OSI Asia-Oceania Workshop (AOW);
- European Workshop for Open Systems (EWOS);
- OSE Implementors' Workshop (OIW);
- CCITT Study Group VIII.

ISO/IEC ISP 10610 consists of the following part under the general title *Information technology - International Standardized Profile FOD11 - Open Document Format: Simple document structure - Character content architecture only*:

- *Part 1: Document Application Profile (DAP)*

Further parts of this International Standardized Profile may be developed.

Annex A forms an integral part of this part of ISO/IEC ISP 10610. Annexes B and C are for information only.

Copyright International Organization for Standardization
Provided by IHS under license with ISO
No reproduction or networking permitted without license from IHS
Not for Resale

Introduction

This International Standardized Profile (ISP) is defined within the context of Functional Standardization, in accordance with the principles specified by ISO/IEC TR 10000, "Framework and Taxonomy of International Standardized Profiles". The context of Functional Standardization is one part of the overall field of Information Technology (IT) standardization activities, covering base standards, profiles and registration mechanisms. A Profile defines a combination of base standards that collectively perform a specific well-defined IT Function. Profiles standardize the use of options and other variations in the base standards, and provide a basis for the development of uniform, internationally recognized conformance test suites.

One of the most important roles for an ISP is to serve as the basis for the development (by organizations other than ISO and IEC) of internationally recognized tests and test centres. ISPs are produced not simply to "legitimize" a particular choice of base standards and options, but to promote real systems interoperability. The development and widespread acceptance of tests based on this and other ISPs is crucial to the successful realization of this goal.

Development of this document application profile has been done in close cooperation between several organizations. These include ODA expert groups within the Asia-Oceania Workshop (AOW), CCITT Study Group VIII, European Workshop for Open Systems (EWOS) and OSE Implementors' Workshop (OIW). The liaison between these organizations has occurred within the meetings of the Profile Alignment Group for ODA (PAGODA). These meetings have focused on the development of a single set of Internationally aligned ODA document application profiles. This ISP is harmonized among the three workshops and has been ratified by the three workshops' plenary assemblies.

The purpose of this International Standardized Profile (ISP) is to facilitate the interworking of applications interchanging documents based on ODA, CCITT Rec. T.410 series | ISO 8613. This International Standardized Profile is suitable for interchanging documents in formatted form, processable form or formatted processable form and has been defined in accordance with CCITT Rec. T.411 | ISO 8613-1. The format of this International Standardized Profile is in accordance with the standardized proforma and notation defined in Addendum 1 - Annex F of CCITT Rec. T.411 | ISO 8613-1.

The specification of FOD11 is identical to the specification of PM-11, except that PM-11 only defines the use of the ODIF interchange format.

Copyright International Organization for Standardization
Provided by IHS under license with ISO
No reproduction or networking permitted without license from IHS
Not for Resale

Information technology – International Standardized Profile FOD11 – Open Document Format: Simple document structure – Character content architecture only –

Part 1:
Document Application Profile (DAP)

1 Scope

This International Standardized Profile specifies interchange formats for the transfer of structured documents between equipment designed for word or document processing. Such documents contain character content.

The documents that can be interchanged using this International Standardized Profile range from memos and letters to simple structured documents. This International Standardized Profile provides a comprehensive level of features for the transfer of documents between these systems.

This International Standardized Profile allows documents to be interchanged in the following forms:

- formatted form;
- processable form;
- formatted processable form.

The architecture levels defined for these three forms have matching functionalities so that the interchange formats of a document are convertible from a processable form to any other form.

This International Standardized Profile is independent of the processes carried out in an end system to create, edit or reproduce documents. It is also independent of the means to transfer documents which, for example, may be by means of communication links or storage media.

A document structured in accordance with this International Standardized Profile is represented for interchange by one of two DAPs. One DAP uses the Office Document Interchange Format (ODIF), the other DAP uses the Office Document Language (ODL), both as defined in ISO 8613-5.

When this document refers to *this International Standardized Profile*, it is referring to either of the document application profiles defined by this International Standardized Profile.

Copyright International Organization for Standardization
Provided by IHS under license with ISO
No reproduction or networking permitted without license from IHS
Not for Resale

2 Normative references

The following documents contain provisions which, through reference in this text, constitute provisions of this International Standardized Profile. At the time of publication, the editions indicated were valid. All documents are subject to revision, and parties to agreements based on this International Standardized Profile are warned against automatically applying any more recent editions of the documents listed below, since the nature of references made by ISPs to such documents is that they may be specific to a particular edition. Members of IEC and ISO maintain registers of currently valid International Standards and ISPs, and CCITT maintains published editions of its current Recommendations.

2.1 Paired Recommendations | International Standards equivalent in technical content

- CCITT Recommendation T.411 (1988), *Open Document Architecture (ODA) and Interchange Format: Introduction and General Principles.*

  ISO 8613-1 : 1989, *Information processing - Text and office systems - Office Document Architecture (ODA) and interchange format - Part 1: Introduction and general principles.*

- CCITT Recommendation T.411 Annex F (1991), *Open Document Architecture (ODA) and Interchange Format: Introduction and General Principles - Annex F : Document Application Profile Proforma and Notation.*

  ISO 8613-1 Add.1[1] : *Information processing - Text and office systems - Office Document Architecture (ODA) and interchange format - Part 1: Introduction and general principles - Addendum 1 : Document Application Profile Proforma and Notation.*

- CCITT Recommendation T.412 (1988), *Open Document Architecture (ODA) and Interchange Format: Document Structures.*

  ISO 8613-2 : 1989, *Information processing - Text and office systems - Office Document Architecture (ODA) and interchange format - Part 2: Document structures.*

- CCITT Recommendation T.414 (1988), *Open Document Architecture (ODA) and Interchange Format: Document Profile.*

  ISO 8613-4 : 1989, *Information processing - Text and office systems - Office Document Architecture (ODA) and interchange format - Part 4: Document profile.*

- CCITT Recommendation T.415 (1988), *Open Document Architecture (ODA) and Interchange Format: Open Document Interchange Format (ODIF) .*

  ISO 8613-5 : 1989, *Information processing - Text and office systems - Office Document Architecture (ODA) and interchange format - Part 5: Office Document Interchange Format (ODIF) .*

- CCITT Recommendation T.416 (1988), *Open Document Architecture (ODA) and Interchange Format: Character Content Architecture.*

  ISO 8613-6 : 1989, *Information processing - Text and office systems - Office Document Architecture (ODA) and interchange format - Part 6: Character content architectures.*

---

1) To be published.

Copyright International Organization for Standardization
Provided by IHS under license with ISO
No reproduction or networking permitted without license from IHS
Not for Resale

- CCITT Recommendation X.208 (1988), *Specification of abstract syntax notation one (ASN.1).*

  ISO/IEC 8824 : 1990, *Information technology - Open Systems Interconnection - Specification of Abstract Syntax Notation One (ASN.1).*

- CCITT Recommendation X.209 (1988), *Specification of basic encoding rules for abstract syntax notation one (ASN.1).*

  ISO/IEC 8825 : 1990, *Information technology - Open Systems Interconnection - Specification of Basic Encoding Rules for Abstract Syntax Notation One (ASN.1).*

- CCITT Recommendation T.505[1)], *Document Application Profile PM-26 | FOD26 - Open Document Format : Enhanced document structure - Character, raster graphics and geometric graphics content architectures.*

  ISO/IEC ISP 11181-1 : 1993, *Information technology - International Standardized Profile FOD26 - Open Document Format : Enhanced document structure - Character, raster graphics and geometric graphics content architectures - Part 1: Document Application Profile (DAP).*

- CCITT Recommendation T.506[1)], *Document Application Profile PM-36 | FOD36 - Open Document Format : Extended document structure - Character, raster graphics and geometric graphics content architectures .*

  ISO/IEC ISP 11182-1 : 1993, *Information technology - International Standardized Profile FOD36 - Open Document Format : Extended document structure - Character, raster graphics and geometric graphics content architectures - Part 1: Document Application Profile (DAP).*

  NOTE - In the titles of the various parts of ISO 8613 the term "Office" occurs. ISO has decided that this shall be changed to "Open" and the new edition of ISO 8613 (to be published) will use "Open" in place of "Office". For this reason this International Standardized Profile uses the term "Open" in its title.

2.2 Additional references

- ISO/IEC 646 : 1991, *Information technology - ISO 7-bit coded character set for information interchange.*

- ISO 2022 : 1986, *Information processing - ISO 7-bit and 8-bit coded character sets - Code extension techniques.*

- ISO 2375 : 1985, *Data processing - Procedure for registration of escape sequences.*

- ISO 6937-2 : 1983, *Information processing - Coded character sets for text communication - Part 2: Latin alphabetic and non-alphabetic graphic characters.*

- ISO 6937-2 Add.1 : 1989, *Information processing - Coded character sets for text communication - Part 2: Latin alphabetic and non-alphabetic graphic characters - Addendum 1.*

- ISO/IEC 7350 : 1991, *Information technology - Registration of repertoires of graphic characters from ISO/IEC 10367.*

- ISO 8859-1 : 1987, *Information processing - 8-bit single-byte coded graphic character sets - Part 1: Latin alphabet No. 1.*

---

1) To be published. The title of this recommendation may be changed.

Copyright International Organization for Standardization
Provided by IHS under license with ISO
No reproduction or networking permitted without license from IHS
Not for Resale

- ISO 8879 : 1986, *Information processing - Text and office systems - Standard Generalized Markup Language (SGML).*

- ISO 9069 : 1988, *Information processing - SGML support facilities - SGML Document Interchange Format (SDIF).*

- ISO 9293 : 1987, *Information processing - Volume and file structure of flexible disk cartridges for information interchange.*

- ISO/IEC TR 10000-1 : 1992, *Information technology - Framework and taxonomy of International Standardized Profiles - Part 1 : Framework.*

- ISO/IEC TR 10000-2 : 1992, *Information technology - Framework and taxonomy of International Standardized Profiles - Part 2 : Taxonomy of OSI Profiles*[1].

- CCITT Recommendation T.400 (1988), *Introduction to Document Architecture, Transfer and Manipulation.*

- CCITT Recommendation T.502[2], *Document Application Profile PM-11 | FOD11 Open Document Format : Simple document structure - Character content architecture only.*

3 Definitions

For the purposes of this International Standardized Profile, the following definitions apply.

The definitions given in CCITT Rec. T.411 | ISO 8613-1 are applicable to this International Standardized Profile.

Constituent constraint names : Each constituent that may be included in a document that conforms to this International Standardized Profile has been given a unique name which serves to associate that constituent with a constituent constraint defined in this International Standardized Profile.

The convention is that full names are used (i.e., no abbreviations are used), two or more words in a name are concatenated and each word begins with a capital. Examples of constituent constraint names used in this International Standardized Profile are BodyText and RectoPage.

In clause 6, each constituent constraint provided by this International Standardized Profile is italicized once at the point in the text at which the purpose of that constituent constraint is defined. This also serves to identify all the constituent constraints provided by this International Standardized Profile.

The same constituent constraint names are also used in the technical specification in clause 7 so that there is a one-to-one correspondence between the use of these names in clauses 6 and 7.

Although the constituent constraint names relate to the purpose of the constituent constraints, the semantics of constituents shall not be implied from the names that are used. Also, these names do not appear in an interchanged document but a mechanism for associating constituents in a document with constituent constraints is provided (see 6.6.1). Thus in an application using this International Standardized Profile, the constituents may be known to the user by different names.

---

1) Taxonomy of this document is based on the first edition of ISO/IEC TR 10000-2 (published 1990). In the present edition of ISO/IEC TR 10000-2 (published 1992), the profile identifiers FOD11, FOD26 and FOD36 were changed to FOD011, FOD026 and FOD036.

2) To be published. The title of this recommendation may be changed.

Copyright International Organization for Standardization
Provided by IHS under license with ISO
No reproduction or networking permitted without license from IHS Not for Resale

4 Relationship with other International Standardized Profiles

This International Standardized Profile belongs to a series of hierarchically related International Standardized Profiles which include FOD26 and FOD36.

The features supported by this International Standardized Profile are a subset of the features supported by the International Standardized Profiles FOD26 and FOD36 and thus all data streams conformant to this International Standardized Profile are also conformant to FOD26 and FOD36, apart from the DAP identifier.

NOTE - This International Standardized Profile is identical to CCITT Recommendation T.502 (PM-11)(to be published), except that PM-11 only defines the use of the ODIF interchange format.

5 Conformance

In order to conform to this International Standardized Profile, a data stream representing a document shall meet the requirements specified in 5.1.

This part of the International Standardized Profile does not define implementation support requirements. These requirements are defined in other parts that make use of this International Standardized Profile.

5.1 Data stream conformance

The following requirements apply to the encoding of data streams which conform to this International Standardized Profile:

a) the data stream shall be encoded either in accordance with the ASN.1 encoding rules defined in CCITT Rec. X.209 | ISO/IEC 8825 or the SGML encoding rules defined in ISO 8879;

b) the data stream shall be structured in accordance with the interchange formats defined in clause 8;

c) the document, as represented by the data stream after resolution of any external references, shall be structured in accordance with one of the documents architecture classes as defined in 6.1 and shall contain all mandatory constituents specified for that class; other constituents may be included, provided that they are permitted for that class, as specified in clause 7;

d) each constituent shall contain all those attributes specified as required for that constituent in this International Standardized Profile; other attributes may be specified provided that they are permitted for that constituent;

e) the attribute values specified shall be within the range of permissible values specified in this International Standardized Profile;

f) the encoded document shall be constructed in accordance with the abstract document architecture defined in CCITT Rec. T.412 | ISO 8613-2;

g) the document shall be structured in accordance with the characteristics and constraints specified in clause 6.

Copyright International Organization for Standardization
Provided by IHS under license with ISO
No reproduction or networking permitted without license from IHS
Not for Resale

5.2 Implementation conformance

This subclause states the requirements for implementations claiming conformance to this International Standardized Profile.

A conforming receiving implementation shall be capable of receiving *either* any data streams conforming to this International Standardized Profile structured in accordance with ODIF *or* any data streams conforming to this International Standardized Profile structured in accordance with ODL *or* both of these. Receiving usually, but not always, involves recognizing and further processing the data stream elements. The explicit meaning of "receiving" is determined by another part of this International Standardized Profile.

6 Characteristics supported by this document application profile

This clause describes the characteristics of documents which may be represented by data streams conforming to this International Standardized Profile. This clause also describes how these characteristics are represented in term of constituent constraints.

6.1 Overview

6.1.1 General

This International Standardized Profile supports the interchange of documents in the following forms:

- processable form, which facilitates the revision of a document by a recipient;
- formatted form, which facilitates the reproduction of a document as intended by the originator;
- formatted processable form, which facilitates the reproduction of a document as intended by the originator or facilitates the revision of a document by a recipient.

The constituents that make up these three classes of data stream are defined in 6.1.2, 6.1.3 and 6.1.4. Constituents defined as "required" shall occur in any data stream that conforms to this International Standardized Profile. Constituents listed as "optional" may or may not be present in the data stream depending on the requirements of the particular data stream.

6.1.2 Formatted form documents

Required constituents:

- a document profile;
- layout object descriptions representing a specific layout structure;
- content portion descriptions associated to the basic objects in the specific layout structure.

Optional constituents:

- layout object class descriptions representing a factor generic layout structure;
- presentation styles.

Copyright International Organization for Standardization
Provided by IHS under license with ISO
No reproduction or networking permitted without license from IHS Not for Resale

6.1.3 Processable form documents

Required constituents:

- a document profile;
- logical object class descriptions representing a complete or partial generic logical structure;
- logical object descriptions representing a specific logical structure;
- content portion descriptions associated to the basic objects in the specific logical structure.

Optional constituents:

- layout object class descriptions representing a complete generic layout structure;
- layout styles;
- presentation styles;
- content portion descriptions associated to the basic object classes in the generic logical structure.

In the case of processable form documents, when the generic layout structure is not present, additional restrictions are placed on the layout directives that may be included in layout styles. These restrictions are defined in 6.4.3.

Note that when the generic layout structure is present, a layout style is required by the constituent constraint of the type Passage.

6.1.4 Formatted processable form documents

Required constituents:

- a document profile;
- logical object class descriptions representing a complete or partial generic logical structure;
- logical object descriptions representing a specific logical structure;
- layout object class descriptions representing a complete generic layout structure;
- layout object descriptions representing a specific layout structure;
- content portion descriptions associated to the basic objects in the specific logical/layout structure;
- layout styles.

Optional constituents:

- presentation styles;
- content portion descriptions associated to the basic object classes generic logical structure.

Copyright International Organization for Standardization
Provided by IHS under license with ISO
No reproduction or networking permitted without license from IHS
Not for Resale

6.2 Logical characteristics

6.2.1 Introduction

This subclause defines the logical constituent constraints provided by this International Standardized Profile to represent the characteristics of documents containing logical component descriptions.

Different constituent constraints may be used to represent and distinguish parts of a document that have different logical characteristics. This subclause describes the general characteristics and typical uses of the constituent constraints that are provided.

The descriptions of the logical characteristics represented by each of the constituent constraints is provided for guidance only. It is the responsibility of the user to determine how a document is to be represented using the constituents provided. Adherence to these guidelines can enhance the mutual understanding of a document by an originator and a recipient.

6.2.2 Overview of the logical structure

From the logical point of view, the document consists of two parts, namely a body part and a common part.

The body part represents the main content of a document and is intended to be reproduced in the body area of the pages that make up the document. The body part shall be included in all documents that are interchanged in accordance with this International Standardized Profile.

The common part represents common content that is to be placed in reserved header and footer areas on each page of a document. Header and footer content are independently optional and so may be included in an interchanged document only if required.

6.2.3 Body part of the logical structure

6.2.3.1 DocumentLogicalRoot

DocumentLogicalRoot is a constituent constraint representing the top level in the document logical structure. Its immediate subordinates consist of a sequence of one or more constituent constraints of the type Passage.

6.2.3.2 Passage

Passage is a constituent constraint that represents the first level of logical subdivision of a document. It may be used to indicate a logical grouping of subordinate parts of a document that are to be regarded as an entity for reading or that have common layout and presentation characteristics.

Passages are typically used to represent:

- the contents to be placed on the title page of a report;
- the front matter in the table of contents or foreword;
- the main matter of the document;
- the back matter, consisting of appendices, glossary or index.

The immediate subordinates of a Passage consist of a sequence of one or more constituent constraints of the type BodyText.

Copyright International Organization for Standardization
Provided by IHS under license with ISO
No reproduction or networking permitted without license from IHS Not for Resale

A document contains only one class definition of the type Passage, which defines the common characteristics of sets of Passages within the document such as layout properties. For example, when the generic layout structure is present, Passage shall be entirely laid out in the pages of one page set.

6.2.3.3 BodyText

BodyText is a constituent constraint which represents the lowest level of logical subdivision of a document. This constituent constraint is a subdivision of Passages. This allows the layout and presentation requirements of different parts of the document to be specified.

This is a basic logical constituent that directly refers to content portions that contain character content. BodyText in the specific logical structure shall refer to one or more content portions each containing processable, formatted or formatted processable character content. However, this constituent in the generic logical structure shall not refer to generic content.

6.2.4 Common content part of the logical structure

6.2.4.1 CommonContent

CommonContent is a constituent constraint that represents common content that is to be laid out in the header and footer areas of the pages of a document. Common content consists of character content.

Any number of constituent constraints of the type CommonContent may be contained in a document. CommonContent is a composite logical object class whose immediate subordinates consist of an arbitrary ordered sequence of one or more of the following constituent constraints:

- CommonText;
- PageNumber.

When the generic layout structure is present, constituents of the type CommonContent and their associated subordinate constituents are constrained to be laid out in frames representing header or footer areas using the "logical source" mechanism (see 6.3.6).

6.2.4.2 CommonText

CommonText is a constituent constraint that represents the common character content that is to be laid out in the header or footer area of a document. For example, header or footer content that appears on each page in a sequence of pages may be represented by this constituent.

CommonText is a constituent constraint for a basic logical object class that references one content portion containing processable, formatted or formatted processable character content.

6.2.4.3 PageNumber

PageNumber is a constituent constraint that represents the common character content that is to be laid out in the header or footer area of a document. This constituent constraint is specifically used when it is required to present a header or footer content which contains an automatically generated page number.

PageNumber is a basic logical object class that contains a content generator. This content generator contains a reference to a page number which is automatically evaluated when the document is laid out. This provides the means of representing the page numbers that are displayed on the consecutive pages of a document.

Copyright International Organization for Standardization
Provided by IHS under license with ISO
No reproduction or networking permitted without license from IHS
Not for Resale

Each page number consists of a single number which may be represented in the form of Arabic or Roman numerals or in its alphabetic equivalent. Page numbering schemes may start at 0 or any value greater than 0 at the document root or page set level.

The format of the content generators is defined in 6.6.3.

6.3 Layout characteristics

This subclause defines the constituent constraints for layout components which are provided by this International Standardized Profile to represent the characteristics of documents.

Different constituent constraints may be used to represent and distinguish parts of a document that have different layout characteristics. This subclause describes the general characteristics and typical uses of the constituent constraints that are provided.

The descriptions of the layout characteristics represented by each of the constituent constraints is provided for guidance only. It is the responsibility of the user to determine how a document is to be represented using the constituents provided. Adherence to these guidelines can enhance the mutual understanding of a document by an originator and a recipient.

6.3.1 Overview of the layout characteristics

The document structure allows the document content to be laid out and presented in one or more page sets. Each page set may be used for different parts of the document, for example, the title page, foreword, table of contents, document body and appendices.

Each page set consists of a series of pages. In general, each page may be sub-divided into three areas; the body area, which is used to layout the document body; and the header and footer areas, which may be used to layout the common content.

Page layout type supported by this International Standardized Profile is used when the character content is to be laid out horizontally (from left to right or from right to left) and from top to bottom within the body area, the header area and footer area. Portrait and landscape orientations of this page layout are illustrated in Figures 1 and 2 respectively.

6.3.2 DocumentLayoutRoot

DocumentLayoutRoot is a constituent constraint represents the top level in the document layout structure. Its immediate subordinates consist of a sequence of one or more constituent constraints of the type PageSet. The numbering schemes for pages may be initialised on this constituent constraint.

6.3.3 PageSet

PageSet is a constituent constraint that represents a grouping of pages within a document. A PageSet is typically used to represent a part of a document that has different layout requirements from other parts of a document. Also, a PageSet may correspond to a part of a document that has a certain logical significance, for example, a PageSet might represent the front matter in a document or an individual chapter.

Only one level of PageSet is allowed in a document. However, a document may contain any number of class definitions of type PageSet which may be used, for example, to provide a choice of alternative layouts for different parts of a document or to specify the exact layout requirements for each successive part of a document.

Copyright International Organization for Standardization
Provided by IHS under license with ISO
No reproduction or networking permitted without license from IHS
Not for Resale

The immediate subordinates of a PageSet consist of a combination of constituent constraints of the types Page, RectoPage and VersoPage as described in 6.3.4.1.

6.3.4 Page characteristics

6.3.4.1 Page constituents

Three constituent constraints are provided to represent the pages within a document, namely *Page*, *RectoPage* and *VersoPage*.

The only difference in the characteristics of these types of constituent constraints concerns the values that may be specified for the parameter "side of sheet" in the attribute "medium type". In the case of Page, the value of this parameter may be specified as 'recto', 'verso' or 'unspecified'. In the case of RectoPage, the value of this parameter may be specified as 'recto' or 'unspecified'. In the case of VersoPage, the value of this parameter may be specified as 'verso' or 'unspecified'. The values 'recto' and 'verso' of the "side of sheet" parameter of the "medium type" attribute are non-basic.

The pages that make up a page set consist of an optional initial page which is represented by the constituent constraint Page and which is optionally followed by either:

a) A sequence of pages represented by the constituent constraint Page. All pages in this sequence shall have the same layout characteristics but these characteristics may differ from those of the initial page.

b) A sequence of pages which are intended to be laid out alternatively on the 'recto' and 'verso' (or on the 'verso' and 'recto') sides of the presentation medium and are represented by the constituent constraints RectoPage and VersoPage respectively. All pages in this sequence shall have the same layout characteristics but these characteristics may differ from those of the initial page.

Pages having the same layout characteristics are pages that have the same page layout (see 6.3.4.5) and for which the body area, header area (if present) and footer area (if present) have the same dimensions and positions within the page (see 6.3.4.3). Pages having the same layout characteristics do not necessarily have the same position on the presentation medium (see 6.3.4.4).

A page set shall contain at least one page.

An initial page is typically used at the beginning of a document or of a section within a document. It may be used, for example, for a title page whose layout requirements differ from the following pages.

The following restrictions also apply to the pages within a page set:

- All the pages must have the same dimensions and orientation (see 6.3.4.2);
- All pages are to be laid out on the same size of presentation medium (see 6.3.4.3).

6.3.4.2 Page dimensions

The dimensions of the pages may be specified as any value (in BMUs) that is equivalent to or less than ISO A3 or ANSI B paper sizes in portrait or landscape orientation. The dimensions may be specified in portrait or landscape orientation. Japanese page sizes B4 and B5 are also supported but the dimensions of these pages lie within the range of dimensions given above.

Copyright International Organization for Standardization
Provided by IHS under license with ISO
No reproduction or networking permitted without license from IHS
Not for Resale

Dimensions equivalent to or less than the common assured reproduction area of ISO A4 and ANSI A in portrait or landscape orientation are basic values. Larger page sizes are non-basic and their use shall be indicated in the document profile.

Any default page dimensions may be specified in the document profile subject to the maximum dimensions defined above.

NOTE - The size termed "North American Letter (NAL)" in CCITT Rec. T.410 series | ISO 8613 (e.g. in CCITT Rec. T.412 | ISO 8613-2 , section 7) is in this Specification called "ANSI A" in order to be consistent with the other reference to ANSI standard paper sizes.

6.3.4.3 Nominal Page sizes

The nominal page sizes that may be specified are listed in Table 1. These may be specified in portrait or landscape orientation. All values of nominal page size are non-basic and hence all values used in a document must be indicated in the document profile.

Any value of nominal page size defined in Table 1, subject to the restrictions specified above, may be specified as the default value in the document profile.

Table 1 also includes the recommended assured reproduction area (ARA). Information loss may occur when a document is reproduced if the dimensions of constituent constraints of the type page exceed the ARA for the specified nominal page size.

Table 1 - Nominal page sizes

Page type	Size in inches or millimeters	Size in BMUs	ARA in BMUs
ISO A5	148 mm x 210 mm	7 015 x 9 920	not defined
ISO A4	210 mm x 297 mm	9 920 x 14 030	9 240 x 13 200
ISO A3	297 mm x 420 mm	14 030 x 19 840	13 200 x 18 480
ANSI legal	8,5 in. x 14 in.	10 200 x 16 800	9 240 x 15 480
ANSI A	8,5 in. x 11 in.	10 200 x 13 200	9 240 x 12 400
ANSI B	11 in. x 17 in.	13 200 x 20 400	12 744 x 19 656
Japanese legal	257 mm x 364 mm	12 141 x 17 196	11 200 x 15 300
Japanese letter	182 mm x 257 mm	8 598 x 12 141	7 600 x 10 200

6.3.4.4 Page offset

The page offset is the distance of the position of the left and top edges of the page relative to the left and top edges respectively of the presentation medium on which each page is reproduced. Any value of page offset may be specified provided that no part of the page area lies outside the area of the nominal page. Also, page offsets specified for the initial, recto and verso pages within a given page set may differ. The default page offset may be specified in the document profile.

6.3.4.5 Page layout characteristics

Each page in a document may be subdivided into three rectangular areas, as follows:

- a body area which is reserved for content that belongs to the body part of the document (see 6.3.5);

Copyright International Organization for Standardization
Provided by IHS under license with ISO
No reproduction or networking permitted without license from IHS
Not for Resale

- a header area which is reserved for common header content (see 6.3.6);
- a footer area which is reserved for common footer content (see 6.3.6).

The body area is mandatory and shall occur on every page in a document. The header and footer areas are both optional.

Also, these three areas shall be entirely contained within the page area and shall not overlap.

For the style of page layout supported by this International Standardized Profile, the header and footer areas are placed above and below the body area respectively. The layout paths in the header, body, and footer area always have a value 270 degrees, as shown in Figures 1 and 2. As this International Standardized Profile only supports a layout path of 270 degrees, which is the standard default value specified in CCITT Rec. T.412 | ISO 8613-2, the layout path shall not be explicitly specified in a document.

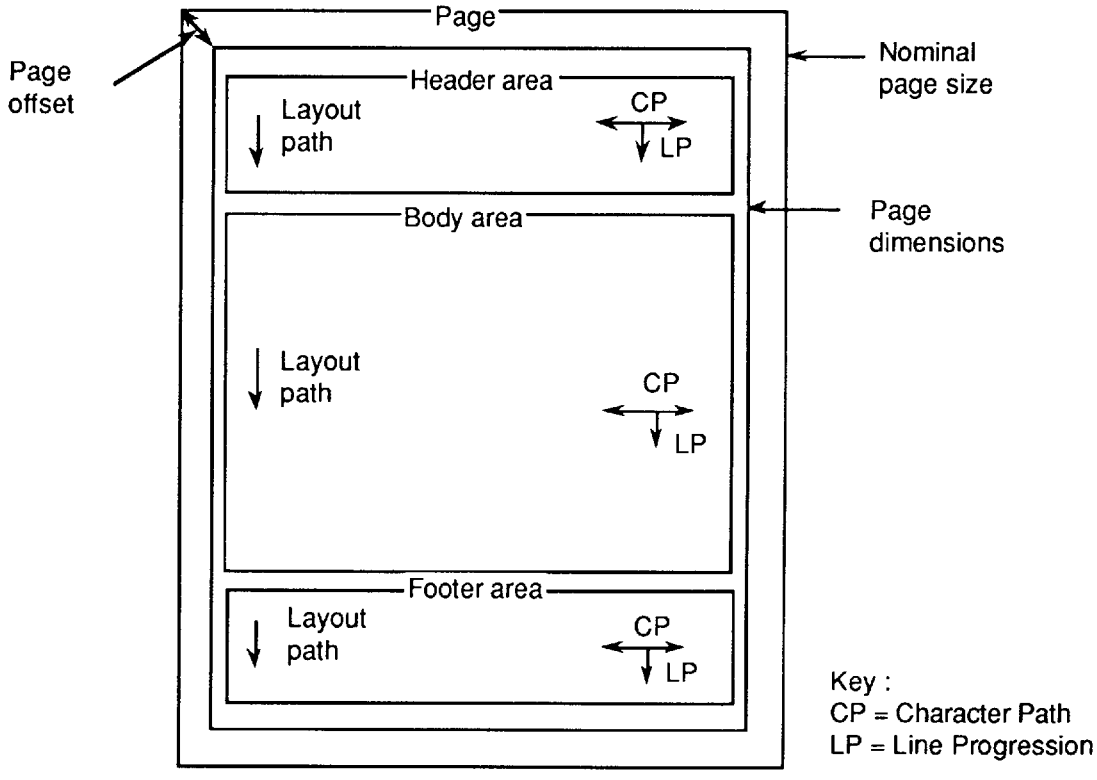

Figure 1 - Page layout (portrait orientation)

Copyright International Organization for Standardization
Provided by IHS under license with ISO
No reproduction or networking permitted without license from IHS
Not for Resale

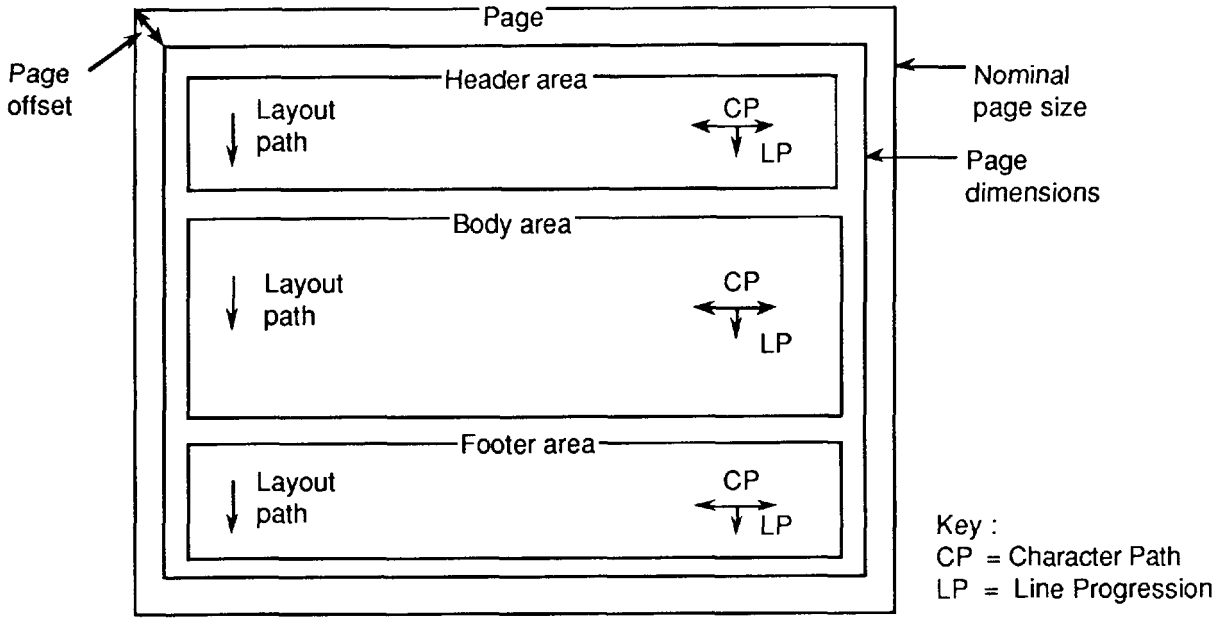

Figure 2 - Page layout (landscape orientation)

6.3.5 Body area characteristics

6.3.5.1 General characteristics

The body area is the area within a page where the main matter of the document, that is the body part of the document, is laid out.

The body area consists of a single frame into which the content is directly laid out. This body area is represented by a BasicBody frame.

6.3.5.2 BasicBody

BasicBody is a constituent constraint which defines a lowest level frame into which the content is directly laid out.

The position and dimensions of this frame are fixed. The layout path of BasicBody is implicitly specified as 270 degrees (see 6.3.4.5).

6.3.6 Header and footer area characteristics

6.3.6.1 General characteristics

The header area consists of a basic area and the footer area consists of a basic area.

A basic header or footer area is an area into which the content is directly laid out. This type of area is represented by a constituent constraint of the type BasicHeader or BasicFooter respectively.

The content allocated to these areas is derived from the common part of the logical structure of a document.

Copyright International Organization for Standardization
Provided by IHS under license with ISO
No reproduction or networking permitted without license from IHS
Not for Resale

6.3.6.2 BasicHeader and BasicFooter

BasicHeader and *BasicFooter* are constituent constraints that define lowest level frames that represent areas within a page that are reserved for common content.

These types of frame have fixed positions and dimensions. The layout path of these frames is implicitly specified as 270 degrees (see 6.3.4.5).

The content that is laid out in these frames is derived, using the logical source mechanism, from the content associated with the composite logical object classes of the type CommonContent.

6.3.7 SpecificBlock

SpecificBlock is a constituent constraint that defines a specific block.

Objects of the type SpecificBlock may only occur in the specific layout structure. They are created during the document layout process and result from the layout of basic logical objects into lowest level frames that constitute the body, header and footer areas.

Each SpecificBlock in a BasicBody frame shall refer to one content portion. A SpecificBlock in a BasicHeader frame or BasicFooter frame may refer to one or more content portions.

6.4 Document layout characteristics

Mechanisms for controlling the allocation of logical constituents to various areas in the layout structure are defined in 6.4.1. Mechanisms for controlling the layout of the content within the allocated areas are defined in 6.4.2.

These mechanisms relate to documents for which a generic layout structure is specified. When a generic layout structure is not present, then these mechanisms are restricted as described in 6.4.3.

6.4.1 Flow controls

Various mechanisms are provided to control the allocation of constituent constraints representing the body parts of the logical structure of a document to page sets, pages and body areas. These are described in 6.4.1.1, 6.4.1.2 and 6.4.1.3. The mechanisms for controlling the layout of the common parts of a document are described in 6.4.1.4.

6.4.1.1 Allocation of content to page sets

The following method of allocating the constituent constraint associated with the body part of the document to page sets is provided.

This provides the ability to specify that a part of a document is to be laid out entirely within a specified page set. This shall be specified for a constituent constraint of the type Passage using the attribute "layout object class" which specifies the object class identifier of the required class of page set.

6.4.1.2 Allocation of content to page

The following method of allocating the constituent constraint associated with the body part of the document to pages is provided.

Copyright International Organization for Standardization
Provided by IHS under license with ISO
No reproduction or networking permitted without license from IHS
Not for Resale

6.4.1.2.1 New layout object

New layout object provides the ability to specify that a particular logical constituent constraint in a document is to be laid out starting at the beginning of a new page. The page specified must belong to the page set in which the immediate preceding logical constituent constraint is laid out

This may be specified for the logical constituent constraint of the type BodyText.

This is achieved using the attribute "new layout object". This attribute may specify the value 'page' indicating that the logical constituent constraint is to be laid out starting on the next available page which may be of any class. Alternatively, the attribute may specify that the logical constituent constraint is to be laid out starting on a page of a particular class; this is achieved by specifying the object class identifier of the required page class.

The specification of a page break must not be used to layout part of a document in a new page set. If a new page set is required, then this should be explicitly specified as described in 6.4.1.1.

6.4.1.2.2 Indivisibility

Indivisibility provides the means to specify whether or not a logical object derived from a basic or composite logical constituent constraints is allowed to be split over more than one page. It may be specified for logical constituent constraints of the types Passage and BodyText. The attribute "indivisibility" is used to specify this feature.

6.4.1.2.3 Same layout object

Same layout object provides the means to specify that the start of the content associated with a logical object and the end of the content associated with the previous logical object are to be laid out within a single page. This may be specified for basic logical objects of the type BodyText. The attribute "same layout object" is used to specify this feature.

6.4.1.3 Allocation of content to body areas

The page to which the content is allocated contains a basic body area . The content is laid out in sequential order in that body area in the form of a single column.

6.4.1.4 Allocation of content to header-footer areas

The frame representing a basic header or footer area (see 6.3.6) specifies the attribute "logical source" which indicates the particular instance of the logical constituent constraint of the type CommonContent (see 6.2.4.1) that is to be laid out in that area. The basic logical constituents subordinate to CommonContent are then laid out in accordance with their sequential order.

6.4.1.4.1 Concatenation

Concatenation provides the means to specify that the content associated with a logical object derived from a basic logical constituent constraint and the content associated with the logical object derived from the previous basic logical constituent constraint are to be regarded as an unbroken stream of content. This may be specified for basic logical constituent constraints of the type CommonText and PageNumber. The attribute "concatenation" is used to specify this feature.

Copyright International Organization for Standardization
Provided by IHS under license with ISO
No reproduction or networking permitted without license from IHS
Not for Resale

6.4.2 Layout of the document content

Various constraints may be specified to control the layout of the content into the body, header and footer areas. These constraints are described below.

6.4.2.1 Margins

The margins are the minimum distances, or offsets, between a part of the document content and the edge of the particular area in which that content is laid out. The margins define the maximum extents of the available area into which the content shall be positioned.

Margins may be specified for the basic logical constituent constraints of the type BodyText, CommonText and PageNumber; different margin values may be specified for different basic logical constituent constraints without restriction.

Four margins may be independently specified for each logical constituent constraint (see Figure 3), namely:

- trailing edge margin;
- leading edge margin;
- right hand edge margin;
- left hand edge margin.

Any combination of the above margins may be specified for a particular logical constituent constraint. These margins are specified by the attribute "offset". Any value may be specified in units of BMUs. If a particular margin is not specified then it is assumed to be 0 BMUs.

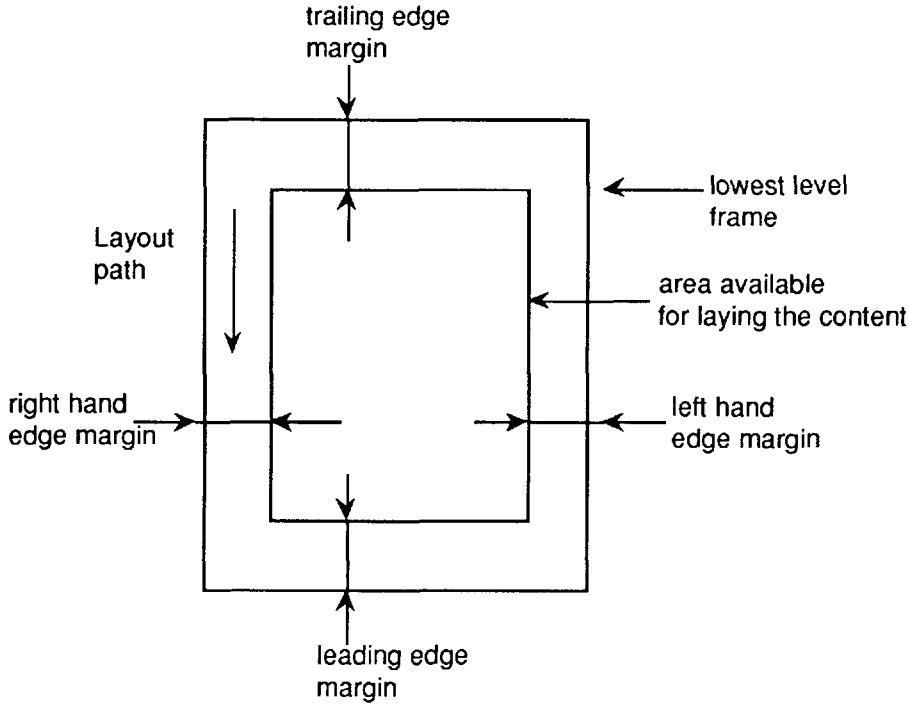

Figure 3 - Specification of margins

Copyright International Organization for Standardization
Provided by IHS under license with ISO
No reproduction or networking permitted without license from IHS
Not for Resale

6.4.2.2 Separation

Leading separations is the minimum distance between one basic logical object and the next one, if any, when they are laid out. Trailing separation is the minimum distance between one basic logical object and the previous one, if any, when they are laid out. Both may be specified for basic logical components of the constituent constraint types BodyText, CommonText and PageNumber. These distances are specified in BMUs by the attribute "separation". If no value is specified, then the minimum distance is assumed to be 0 BMUs.

6.4.3 Layout controls applicable in the absence of a generic layout structure

In processable form documents the generic layout structure is optional. If the generic layout structure is omitted, then it is the responsibility of the receiver to define an appropriate layout structure. No limitations are placed on the layout structure that is used.

When a generic layout structure is not specified within a processable form document, then restrictions are placed on the layout control functions described in 6.4.1 and 6.4.2 that may be specified within the document. These restrictions are indicated below.

- It is not possible to specify that certain logical parts of a document are to be allocated to a given page set as defined in 6.4.1.1.

- It is possible to specify page break as defined in 6.4.1.2.1 but it is only possible to indicate that the layout should begin on a new page. It is not possible to specify a particular page class.

- The logical parts of the document that are intended to be laid out in the body area and in the header/footer areas of each page may be distinguished from each other by means of application comments specified for them (see 6.6.1). An exception is that it is not possible to distinguish whether a particular portion of the common content is to be placed in a header or a footer area (or both).

- Margins and separation as defined in 6.4.2 may all be specified. Indivisibility as defined in 6.4.1.2.2 and same layout object as defined in 6.4.1.2.3 may all be specified. Concatenation as defined in 6.4.1.4.1 may all be specified.

6.5 Content layout and imaging characteristics

A document contains character content.

The content architectures that may be specified using the attribute "content architecture class" are formatted character, processable character and formatted processable character. Any of these may be specified as the default in the document profile.

6.5.1 Introduction

This subclause defines the features that are applicable to the character content contained in a document and the presentation attributes and control functions that may be used to specify these features. These features may apply to basic logical and layout components unless otherwise indicated.

The default values for the following features may be specified in the document profile:

- graphic character sets;
- graphic character subrepertoire;

Copyright International Organization for Standardization
Provided by IHS under license with ISO
No reproduction or networking permitted without license from IHS
Not for Resale

- code extension announcers;
- line spacing;
- character spacing;
- character path;
- line progression;
- graphic rendition, including the parameter values:
  default rendition, increased intensity (bold), italicized, underlined, crossed-out,
  normal intensity, not italicized, not underlined, not crossed-out;
- line layout table;
- indentation;
- alignment;
- first line offset;
- itemization;
- widow size;
- orphan size;
- initial offset.

The specification in a document of a non-basic feature by a presentation attribute or control function shall be indicated in the document profile.

6.5.2 Character content architecture class

Processable and formatted processable form documents may contain processable, formatted or formatted processable character content. Formatted form documents may contain formatted or formatted processable character content.

6.5.3 Character repertoire

The basic character repertoire supported by this International Standardized Profile is composed of the 94 characters of ISO-IR 6 (the IRV of ISO/IEC 646) plus the character space.

Any other graphic character set which is registered in accordance with ISO 2375 may be designated and invoked at any point in the document provided its use is indicated in the document profile as a non-basic value using the character presentation feature "graphic character sets". No locking shift functions are specified in this presentation feature.

The code extension techniques allowed for the designation and invocation of character sets to the left hand side and right hand side of the 8-bit code table (GL and GR respectively) are defined in 6.5.4.

Using these code extension techniques, the graphic character sets designated and/or invoked at the beginning of a content portion containing character content are specified by the presentation attribute "graphic character sets". The graphic character sets may be changed at any point within a content portion.

The default graphic character sets which apply to the content portions within a document may be specified in the document profile using the presentation attribute "graphic character sets".

If the character set defined in ISO 6937-2 with or without Addendum 1 is designated and invoked, then the use of any of its subrepertoires registered according to ISO/IEC 7350 may be specified using the presentation attribute "graphic character subrepertoire". All subrepertoires are non-basic and their use must be indicated in the document profile. The subrepertoire shall not be changed within a content portion.

Copyright International Organization for Standardization
Provided by IHS under license with ISO
No reproduction or networking permitted without license from IHS
Not for Resale

NOTES

1 The basic character repertoire supported by this International Standardized Profile is not the standard default value specified in CCITT Rec. T.416 | ISO 8613-6; hence it may be necessary to specify, in the document profile of a particular document, that this is the default value being used for that document.

2 Revised CCITT Recommendations T.50 and T.51 and new CCITT Recommendation T.52 are under preparation. CCITT Recommendations T.50 and T.51 are intended to be completely compatible with ISO/IEC 646 and ISO 6937 (under revision) respectively.

6.5.4 Code extension techniques

The code extension techniques specified in ISO 2022 may be used subject to the following restrictions:

a) G0 set : only ISO-IR 6 (the IRV of ISO/IEC 646), ISO-IR 2 (the primary set of ISO 6937-2), or any other version of ISO/IEC 646 may be designated for this set; these graphic character sets may only be invoked in GL.

b) G1, G2, G3 sets : no restrictions are placed on the character sets that may be designated for these sets; these graphic character sets may only be invoked in GR.

c) The locking and single shift functions allowed are as follows:

- LS0 to invoke the G0 set into GL;
- LS1R to invoke the G1 set into GR;
- LS2R to invoke the G2 set into GR;
- LS3R to invoke the G3 set into GR;
- SS2 to invoke one character from the G2 set into GL;
- SS3 to invoke one character from the G3 set into GL.

(Here GL and GR refer to the left and right hand parts respectively of the 8-bit code table.)

d) When specifying the presentation attribute "graphic character sets", it is necessary to invoke character sets for both GL and GR. Thus an allowed character set shall be designated into G0 (see item a) above) and invoked into GL. It is also necessary to invoke a character set into GR which has been designated into G1, G2 or G3 set.

e) The empty set shall be designated into G1 and invoked into GR if no other specific character set is invoked in GR.

The code extension techniques allowed are illustrated in Figures 4 and 5.

The announcement and encoding of these functions are to be as specified in ISO 2022.

The code extension techniques that are used or may be used in a basic component shall be specified by the presentation attribute "code extension announcers". The default code extension announcers used throughout a document may be specified in the document profile using the presentation attribute "code extension announcers".

NOTE - In accordance with CCITT Rec. T.416 | ISO 8613-6, there is no restriction concerning the number of graphic character sets which may be designated and/or invoked in the presentation attribute "graphic character sets" providing the restrictions defined in this subclause are applied. Hence designation to a particular G set overrides the previous designation to that set, and invocation to GL or GR overrides the previous invocation to GL or GR respectively. Thus the sequential order of designation and/or invocation sequences in the attribute "graphic character sets" is significant.

Copyright International Organization for Standardization
Provided by IHS under license with ISO
No reproduction or networking permitted without license from IHS Not for Resale

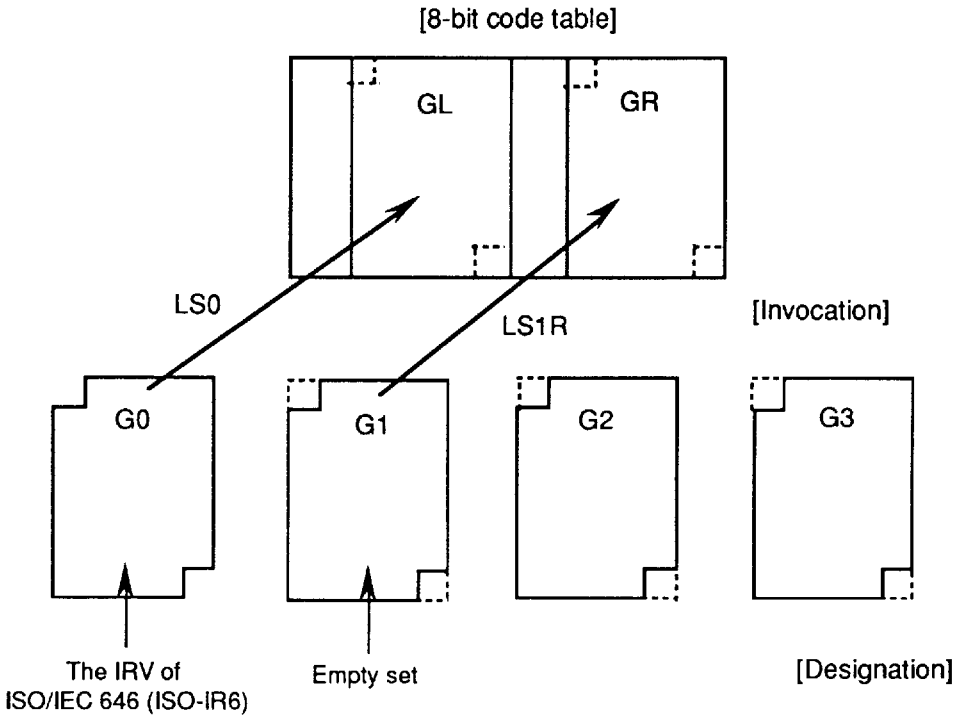

Figure 4 - Code extension features (basic case)

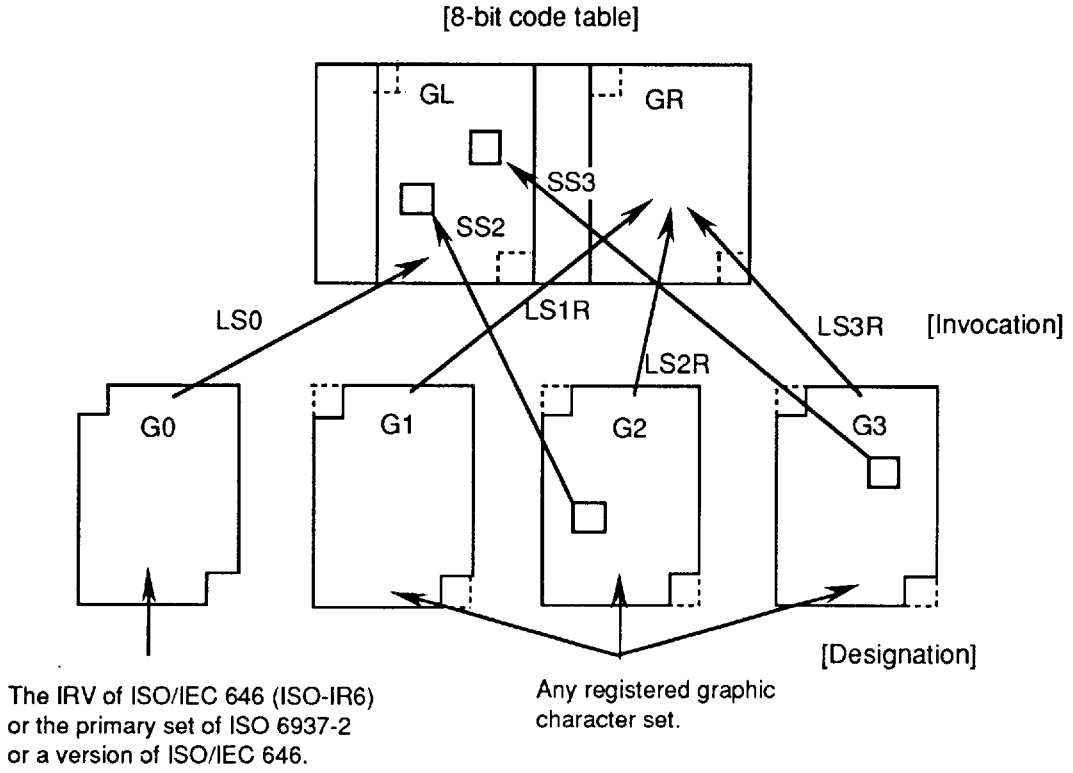

Figure 5 - Code extension features (all possible cases)

Copyright International Organization for Standardization
Provided by IHS under license with ISO
No reproduction or networking permitted without license from IHS
Not for Resale

6.5.5 Line spacing

Line spacing values of 100, 150, 200, 300 and 400 BMUs may be specified. The values of 200, 300 and 400 BMUs are basic; the use of any other value in a document is non-basic and shall be indicated in the document profile.

The line spacing may be specified at the beginning of the content associated with a basic component using the presentation attribute "line spacing". The value may be changed anywhere within the content portion using the control function SVS.

6.5.6 Character spacing

Character spacing values of 80, 100, 120, 160 and 200 BMUs may be specified. The value of 120 BMUs is basic; the use of any other value in a document is non-basic and shall be indicated in the document profile.

The character spacing may be specified at the beginning of the content associated with a basic component using the presentation attribute "character spacing". The value may be changed anywhere within the content portion using the control functions SHS and SCS.

NOTES

1 A character spacing value of 160 BMUs is provided for use with Korean Hangul characters.

2 SHS parameters 0, 1, 2 and 3 are provided. The use of parameters 5 and 6 may be provided in a future edition of this Specification for use with Chinese characters.

6.5.7 Character path and line progression

Both from left to right and from right to left horizontal writing directions may be specified within a document. The line progression is then from top to bottom only on the page.

Character path values of 0 degrees and 180 degrees may be specified. The value of 0 degrees is basic. The value of 180 degrees is non-basic and must be indicated in the document profile.

The values of character path may be specified at the beginning of the content associated with a basic component using the presentation attribute "character path". The value shall not be changed within a content portion.

The line progression supported by this International Standardized Profile is 90 degrees and 270 degrees. The value of 270 degrees is basic. The value of 90 degrees is non-basic and must be indicated in the document profile. The line progression value of 270 degrees may be specified in case of the character path 0 degrees, and the line progression value of 90 degrees may be specified in case of the character path value of 180 degrees.

6.5.8 Character orientation

The character orientation supported by this International Standardized Profile is 0 degrees only which is the standard default value specified in CCITT Rec. T.416 | ISO 8613-6. Thus the character orientation shall not be specified.

6.5.9 Emphasis

The following modes of emphasising graphic characters may be specified as basic:

- default rendition;

Copyright International Organization for Standardization
Provided by IHS under license with ISO
No reproduction or networking permitted without license from IHS Not for Resale

- normal intensity;
- increase intensity (bold);
- italicized;
- not italicized;
- underlined;
- not underlined.

The following modes of emphasising graphic characters may be specified as non-basic:

- crossed-out;
- not crossed-out.

The above mentioned non-basic modes shall be indicated in the document profile. If no default mode is explicitly specified in the document profile, then the default mode is 'default rendition'.

The mode of emphasis may be specified at the beginning of the content associated with a basic component using the presentation attribute "graphic rendition". The mode may be changed anywhere within the content using the control function SGR.

The mode of emphasis remains in effect within the content associated with a basic component until changed into a mutually exclusive mode or by the specification of 'default rendition'. Mutually exclusive modes are normal/increased intensity, italicized/not italicized, underlined/not underlined and crossed-out/not crossed-out. One mode from each mutually exclusive set may be in operation at any point in the document content.

Default rendition cancels the effect of all modes of emphasis that are currently in operation and specifies that the text shall be displayed in accordance with the default rendition parameters set for the presentation device. Thus, for example, if it is required to ensure that the content is not underlined, then it is necessary to explicitly specify that underlined is not to be used.

6.5.10 Tabulation

Tabulation stop positions may be specified at any character position along the character path. Each stop is specified by means of the following:

a) The tabulation position, relative to the margin position is in the direction opposite to the character path.

b) An optional alignment qualifier that specifies the type of alignment to be used at the designated tabulation position. The type may be specified as one of the following:

- start aligned;
- end aligned;
- centred;
- aligned around.

These alignment qualifiers are defined in CCITT Rec. T.416 | ISO 8613-6. If the alignment qualifier is not explicitly specified, then it is assumed that start aligned is to be used.

Only one set of tabulation stops can be specified to be applicable to the content associated with a basic component. No limit is placed on the number of tabulation stops that may be specified within a given set.

--`,,`-`-`,,`,,`,`,,`---

Copyright International Organization for Standardization
Provided by IHS under license with ISO
No reproduction or networking permitted without license from IHS

Not for Resale

The set of tabulation stop positions associated with the content of a basic component are specified using the presentation attribute "line layout table". Tabulation stop positions are invoked within the content using the control function STAB.

The tabulation reference numbers used in the control function STAB and associated presentation attribute "line layout table" shall be chosen so that, in any given line layout table the reference numbers are unique, sequential in the direction of the character path and do not include leading zeroes.

6.5.11 Indentation

Indentation is the distance between the first character on a line of content and the position of the margin that is in the direction opposite to the character path. Thus the value of indentation specified determines the line home position (as defined in CCITT Rec. T.416 | ISO 8613-6).

Indentation acts as temporary alternation in the position of the offset in the direction opposite to the direction of the character path. When text is formatted, it is intended to be laid out between the indentation position and the margin position in the direction of the character path.

Any value of indentation may be specified for basic logical components using the presentation attribute "indentation". The indentation value shall not be changed within a content portion.

6.5.12 Alignment

This feature is concerned with how the first and last characters on each line of character content are to be laid out during the formatting process.

The following values of alignment may be specified as basic:

- start aligned;
- end aligned;
- centred;
- justified.

The semantics of these values are as defined in CCITT Rec. T.416 | ISO 8613-6.

The presentation attribute "alignment" is used to specify the alignment that is applicable to the content associated with a basic component. The alignment value cannot be changed within a content portion.

6.5.13 First line format

This feature specifies how the first line of the content associated with a basic component is to be laid out and provides for the itemization of paragraphs.

It allows the first character in the content to be positioned at some point along the character path relative to the indentation position (as defined in 6.5.11). This point may be in the direction of the character path or in the direction opposite to the direction of the character path relative to the indentation position.

In addition, this feature provides for the specification of an item identifier on the first line. The item identifier is a string of characters that precedes and is separated from the remaining characters that form the first line. The control function CR is used as the separator.

Copyright International Organization for Standardization
Provided by IHS under license with ISO
No reproduction or networking permitted without license from IHS Not for Resale

The features provided correspond to examples 10.1 to 10.5 shown in Figure 10 of CCITT Rec. T.416 | ISO 8613-6.

First line format is specified by the presentation attributes "first line offset" and "itemization", and "indentation". Only those values of the attributes which combine to form the examples shown in Figure 10 of CCITT Rec. T.416 | ISO 8613-6 may be used.

6.5.14 Widow and orphan sizes

The widow size specifies the minimum number of lines of content that shall be allocated to a following frame or page when the content associated with a basic logical component is laid out such that it flows over two frames or pages. To accommodate this, it may be necessary to move a number of lines of content from one frame or page to the next frame or page.

The orphan size specifies the minimum number of lines of content that shall be placed in the current frame or page when the content associated with a basic logical component is split over two frames or pages. If this minimum cannot be accommodated, then the whole content shall be placed in the next frame or page.

Any value of widow or orphan size may be specified using the presentation attributes "widow size" and "orphan size" respectively.

Widow and orphan size may only be specified for character content placed in the body area of pages.

6.5.15 Reverse character string

Bi-directional writing is supported by this International Standardized Profile (see 6.5.7). Hence, a string of characters in a content portion associated with a basic component may be specified to be imaged in the reverse direction of the immediately preceding character string. Such strings may be specified by the control function SRS as defined in CCITT Rec. T.416 | ISO 8613-6.

This control function is provided for cases in which the text belongs to different languages and the character content is written, for example, from left to right or from right to left within the same line of characters, dependent upon the language and/or character set being used.

> NOTE - The use of this control function cannot be indicated in the document profile. Thus it is intended that implementations should ignore this control function when reverse character string layout and presentation is not supported.

6.5.16 Superscripts and subscripts

Superscripts and subscripts may be specified anywhere within the content associated with a basic component by using the control functions PLU and PLD. The use of these control functions shall be in accordance with CCITT Rec. T.416 | ISO 8613-6.

6.5.17 Line breaks

The control functions BPH and NBH may be inserted in processable and formatted processable form character content to indicate where line breaks may occur or may not occur respectively, when the content is laid out.

Copyright International Organization for Standardization
Provided by IHS under license with ISO
No reproduction or networking permitted without license from IHS
Not for Resale

6.5.18 Substitution of characters

The control function SUB is provided to represent characters produced by a local system that cannot be represented by a character within a character set supported by this International Standardized Profile.

6.5.19 Initial point

The initial point which is applicable to basic layout components may be specified by the attribute "initial offset". Any value may be specified.

6.5.20 Use of control functions

The following is a list of all the control functions and parameter values (where applicable) that may be specified in character content:

SHS - select character spacing (allowed parameter values: 0, 1, 2, 3);
SCS - set character spacing (allowed parameter values: 80, 100, 120, 160, 200 BMUs);
SVS - select line spacing (allowed parameter values: 0, 1, 2, 3, 4);
SGR - select graphic rendition (allowed parameter values: 0, 1, 3, 4, 9, 22-24, 29);
STAB - selective tabulation (allowed parameter values: any);
SRS - start reverse string (allowed parameter values: any);
PLD - partial line down;
PLU - partial line up;
BPH - break permitted here;
NBH - no break here;
JFY - no justify;
SUB - substitute;
SP - space;
CR - carriage return;
LF - line feed;
SOS - start of string;
ST - string terminator;
- code extension control functions (see 6.5.4).

The use of all these control functions, with exception of SP, CR, LF, SOS and ST, are described in 6.5.3 through 6.5.19.

6.5.21 Formatting the content

The attribute "formatting indicator" shall not be specified within documents that are conformant with this International Standardized Profile.

6.6 Miscellaneous features

6.6.1 Application comments

Specification of the attribute "application comments" is mandatory for all object classes contained in a document that conforms to this International Standardized Profile. Specification of this

Copyright International Organization for Standardization
Provided by IHS under license with ISO
No reproduction or networking permitted without license from IHS
Not for Resale

attribute is mandatory for all objects that do not refer to an object class. Specification of this attribute is optional for all objects that refer to object classes.

This attribute is structured so that it contains two fields. The first field is mandatory when the attribute is specified and contains a numeric string which uniquely identifies the constituent constraint applicable to the constituent for which the attribute is specified. This facilitates the processing of documents. A list of these identifiers is given in Table 2.

NOTES

1 The values of the constituent constraint numeric identifiers are not unique between the logical and layout structures, and therefore in order to identify the constituent constraint applicable to a constituent, it is necessary to know the structure of which the constituent is a part.

2 For constituent constraints that correspond to each other between the hierarchically related profiles to which this International Standardized Profile belongs, the same constituent constraint numeric identifier is specified.

The second field is optional and may contain any information that is relevant to the application or user. The format of the second field is not defined in this International Standardized Profile and the interpretation of this field depends upon a private agreement between the originator and recipient of the document.

The encoding of the attribute "application comments" is defined in 8.1.3 and 8.2.3.

Table 2 - List of constituent constraint numeric identifier

Logical constituent constraints	Constituent constraint numeric identifier
DocumentLogicalRoot	0
Passage	1
BodyText	14
CommonContent	19
CommonText	20
PageNumber	40
Layout constituent constraints	**Constituent constraint numeric identifier**
DocumentLayoutRoot	0
PageSet	1
Page	2
RectoPage	3
VersoPage	4
BasicHeader	27
BasicBody	28
SpecificBlock	30
BasicFooter	33

6.6.2 Alternative representation

The content information in a content portion may be replaced by a string of characters specified in the attribute "alternative representation". This attribute may be specified in content portions.

The specification and use of this attribute is optional. The string of characters specified must belong to the character repertoires indicated in the document profile attribute "alternative representation character sets" (see 6.7.4.3). If the latter attribute is not explicitly specified in the document profile, then the default defined in CCITT Rec. T.410 series | ISO 8613 is assumed.

Copyright International Organization for Standardization
Provided by IHS under license with ISO
No reproduction or networking permitted without license from IHS
Not for Resale

The control functions SP, CR and LF may also be used within the character string but no other control function is allowed; hence graphic character set cannot be changed within the alternative representation.

6.6.3 Page numbering

As described in 6.2.4.3, the constituent constraint PageNumber contains a content generator which may refer to a page number. This content generator is evaluated when the document is laid out and this mechanism provides a means of reproducing the appropriate number of each page of a document.

The content generator has the following format:

<string-literal><num-expr><string-literal>

The format of this content generator is defined in the macro PGNUMBER (see 7.3.1).

The <string-literal> fields are optional and are pre-defined character strings. The basic character repertoire used to specify these strings is ISO-IR 6 (the IRV of ISO/IEC 646). Any other character repertoire, and subrepertoire if appropriate, may be used provided that it is designated and invoked by the appropriate code designation and invocation sequences and indicated in the document profile as a non-basic value. SP and no other control functions may be used in these strings.

The field <num-expr> is a reference to a binding 'PGnum' which specifies the number of the page concerned. This binding is initialised at the document layout root or page set level (see the macro INITIALISEPGNUM in 7.4.1) and automatically incremented on each successive page (see the macro PAGENUMBER in 7.4.1). By placing initialisation on the layout root, rather than on the pageset class(es), the pagenumbering may be defined to be continued from one pageset to the next.

The content associated with logical object classes of the type PageNumber is laid out in a frame of one of the following types: BasicHeader or BasicFooter (see 6.3.6) using the logical source mechanism. Thus when the appropriate frame is being laid out, the field <num-expr> in the content generator contained in a logical object class of the type PageNumber is evaluated and this determines the value of the binding 'PGnum' that is associated with the current page being laid out.

The number associated with the binding 'PGnum' is applied to a string function during its evaluation in order to convert the number into a character string. This enables the number to be represented in the form of an Arabic numeric string, an upper or lower case Roman numeric string or an upper or lower case alphabetic string.

Each page class may refer to a different instance of logical object classes of the type PageNumber and this allows different page numbering formats to be used for different parts of the document.

An example of page numbering is "Page X" which consists of two concatenated character strings. The first is the literal character string 'Page' and this is concatenated to a string function denoted by 'X'. When 'X' is evaluated in a particular instance it may, for example, return the character string 'iv', the Roman numerical (lower case) for the number '4'.

6.6.4 User readable comments

Information which is to be interpreted as comments relevant to constituents and associated content portions may be specified using the attribute "user readable comments". This information is intended for presentation to humans.

Copyright International Organization for Standardization
Provided by IHS under license with ISO
No reproduction or networking permitted without license from IHS
Not for Resale

The information consists of a string of characters which shall belong to one of the character repertoires indicated in the document profile attribute "comments character sets" (see 6.7.4.2). If the latter attribute is not explicitly specified, then the default defined in CCITT Rec. T.410 series | ISO 8613 is assumed. The control functions CR, LF, SP and code extension control functions may also be used within the character string but no other control functions are allowed.

6.6.5 User visible name

Information which may be used to identify constituents within a document may be specified using the attribute "user visible name". This information is intended for presentation to humans, for example, to assist in the editing of documents.

The information consists of a string of characters which shall belong to one of the character repertoires indicated in the document profile attribute "comments character sets" (see 6.7.4.2). If the latter attribute is not explicitly specified, then the default defined in CCITT Rec. T.410 series | ISO 8613 is assumed. The control functions CR, LF, SP and code extension control functions may also be used within the character string but no other control functions are allowed.

6.7 Document management features

Information relating to the document as a whole is specified in the document profile which is represented by the constituent *DocumentProfile*. This constituent must be specified in every document.

The information in the document profile is classified into the following categories:

- document constituent information;
- document identification information;
- document default information;
- non-basic characteristics information;
- document management information.

The information in the document profile may be of interest to the user or may be used for machine processing of the document.

6.7.1 Document constituent information

This information specifies which constituents are used to represent the document.

6.7.1.1 Presence of document constituents

This information indicates which constituents are included in the document. That is, this information indicates whether or not the document contains a generic logical structure, a specific logical structure, a generic layout structure, a specific layout structure, layout styles and presentation styles. It is mandatory to specify this information in the document profile.

6.7.2 Document identification information

This information relates to the identification of the document. This information is divided into six categories.

Copyright International Organization for Standardization
Provided by IHS under license with ISO
No reproduction or networking permitted without license from IHS
Not for Resale

6.7.2.1 Document application profile information

This information indicates the document application profile to which the document belongs. It is mandatory to specify this information using the attribute "document application profile".

6.7.2.2 Document architecture class information

This information indicates the document architecture class to which the document belongs (see 6.1). It is mandatory to specify this information using the attribute "document architecture class".

6.7.2.3 Content architecture classes information

This information indicates the content architecture classes used in the document (see 6.5.2). It is mandatory to specify this information using the attribute "content architecture classes".

6.7.2.4 Interchange format class information

This information indicates the interchange format class used to represent the document (see clause 8). It is mandatory to specify this information using the attribute "interchange format class".

6.7.2.5 ODA version information

This information indicates the International Standard or CCITT Recommendation to which the document conforms. It also specifies a calendar date, which indicates that the document conforms to the version of the International Standard or CCITT Recommendation and any addenda that are current on that date. It is mandatory to specify this information using the attribute "ODA version".

6.7.2.6 Document reference

This information serves to identify the document. Typically this information is allocated to the document by the creator of the document. The identifier may consist of an ASN.1 object identifier or string of characters. It is mandatory to specify this information using the attribute "document reference".

6.7.3 Document default information

This information specifies various default values for attributes used in the document. The default values that are allowed are specified in the various subclauses of clause 6. The specification of this information is only required when it is required to specify a default value which is other than the standard default value specified in CCITT Rec. T.410 series | ISO 8613.

Default values for the following groups of attributes may be specified:

- document architecture attributes;
- character content attributes.

6.7.4 Non-basic characteristics information

This information specifies the non-basic attribute values specified in the document. It is mandatory to specify a non-basic attribute value in the document profile when such a value is used in the document.

Copyright International Organization for Standardization
Provided by IHS under license with ISO
No reproduction or networking permitted without license from IHS Not for Resale

The following types of non-basic attribute values may be specified:

- profile character sets;
- comments character sets;
- alternative representation character sets;
- page dimensions;
- medium-types;
- character presentation features.

Further information concerning document profile, comments and alternative representation character sets is given below.

6.7.4.1 Profile character sets

Some document profile attributes have values consisting of character strings, for example, the document management attributes. The character sets used in these character strings are specified by the document profile attribute "profile character sets".

This attribute "profile character sets" specifies a code extension announcer and designations of character sets, which are subject to the following restrictions:

- The code extension announcer shall be 04/03 when specified. This code extension announcer specifies the use of G0 and G1 sets in an 8-bit environment and also the invocation of G0 and G1 sets into GL and GR respectively. Thus, in each attribute to which this attribute applies, invocation shift functions are not necessary, because G0 and G1 sets are implicitly invoked by this code extension announcer.

- G0 set : only ISO-IR 6 (the IRV of ISO/IEC 646), ISO-IR 2 (the primary set of ISO 6937-2), or any other version of ISO/IEC 646 may be designated for this set; these graphic character sets are implicitly invoked in GL.

- G1 set : no restrictions are placed on the graphic character sets that may be designated for this set; these graphic character sets are implicitly invoked in GR.

- The empty set shall be designated into G1 and invoked into GR if no other specific character set is invoked in GR.

If the attribute "profile character sets" is not specified, then the default defined in ISO 8613 is assumed.

6.7.4.2 Comments character sets

The character sets assumed to have been designated and optionally invoked at the beginning of the character strings specified by the attributes "user readable comments" (see 6.6.4) and "user visible name" (see 6.6.5) are specified using the document profile attribute "comments character sets".

It also specifies code extension techniques and the graphic character sets which may be used in the attributes "user readable comments" and "user visible name".

If this attribute is specified, the code extension techniques which may be used in the "user readable comments" and "user visible name" shall be announced by appropriate code extension announcers. The use of G0 set and GL shall always be announced. Other code extension announcers are to be specified according to the requirements of a particular document.

Copyright International Organization for Standardization
Provided by IHS under license with ISO
No reproduction or networking permitted without license from IHS
Not for Resale

Two kinds of code extension techniques are permitted for this attribute. One is to use GL and GR without shift functions, and the other is to use various character sets by shift functions. The former is rather restricted but no shift functions are necessary in the "user readable comments" and "user visible name". The same restriction as in 6.7.4.1 is applied in this case. The latter permits various usages of character sets but invocations shall be specified by shift functions in the "user readable comments" and "user visible name". The same restriction as in 6.5.4 is applied in this case.

All the graphic character sets which may be used in the attributes "user readable comments" and "user visible name" shall be designated in the "comments character sets".

There are no restrictions concerning the number of graphic character sets which are designated and/or invoked in the "comments character sets"; hence designation to the same G set overrides the previous G set.

If the attribute "comments character sets" is not specified, then the default defined in CCITT Rec. T.410 series | ISO 8613 is assumed.

6.7.4.3 Alternative representation character sets

This attribute specifies the graphic character sets designated and invoked at the beginning of the attribute "alternative representation" other than the standard default graphic character sets.

The restriction on profile character sets described in 6.7.4.1 is also applied. If this attribute is not explicitly specified in the document profile, the default defined in CCITT Rec. T.410 series | ISO 8613 is assumed.

6.7.5 Document management attributes

Document management attributes contain information about the content of the document and its purpose. Information relating to the following may be specified:

- document description (see the note below);
- dates and times;
- originators;
- other user information;
- external references;
- local file references;
- content attributes;
- security information.

The attributes that may be used to specify this information are defined in CCITT Rec. T.414 | ISO 8613-4.

The string of characters used in the document management attributes shall belong to the character sets indicated in the document profile attribute "profile character sets" (see 6.7.4.1). If the latter attribute is not explicitly specified in the document profile, then the default defined in CCITT Rec. T.410 series | ISO 8613 is assumed.

The control functions SP, CR and LF may also be used within the character strings but no other control functions are allowed. Hence the graphic character set cannot be changed in the document management attributes.

NOTE - The document description includes the specification of the document reference (see 6.7.2.6).

Copyright International Organization for Standardization
Provided by IHS under license with ISO
No reproduction or networking permitted without license from IHS Not for Resale

7 Specification of constituent constraints

This clause specifies the definitions of the constituent constraints which may be represented by data streams conforming to this International Standardized Profile.

7.1 Introduction

The structure diagrams illustrating the relationships between the constituents in the logical structures are shown in 7.1.1. The macros indicated on these diagrams are defined in 7.3.1. These macros define the permissible values for the attribute "generator for subordinates" that are applicable to the constituents and, define the allowed structures that are supported by this International Standardized Profile.

The structure diagrams illustrating the layout structures are shown in 7.1.2. The macros indicated on these diagrams are defined in 7.4.1.

7.1.1 Diagrams of relationships of logical constituents

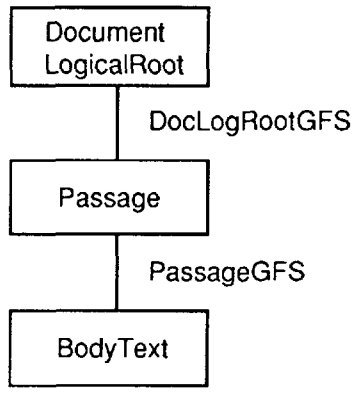

Figure 6 - The body part of the generic logical structure

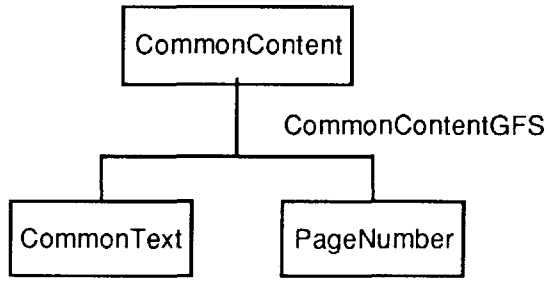

Figure 7 - The common part of the generic logical structure

Copyright International Organization for Standardization
Provided by IHS under license with ISO
No reproduction or networking permitted without license from IHS
Not for Resale

7.1.2 Diagrams of relationships of layout constituents

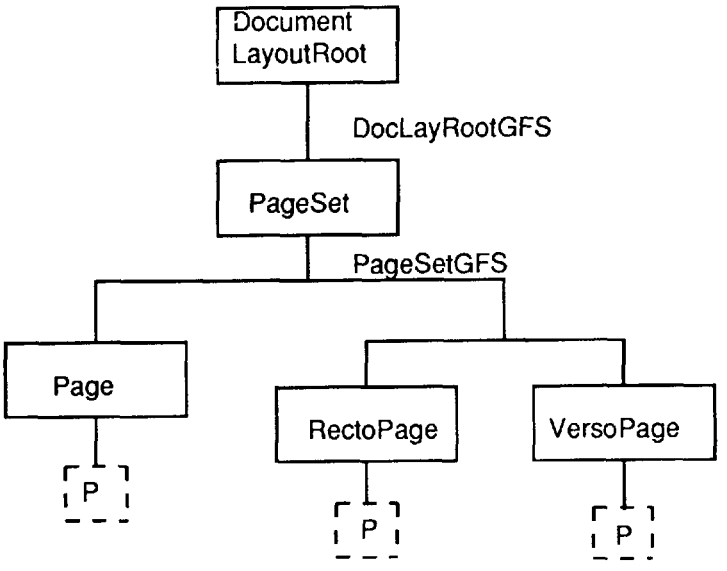

Figure 8 - The layout structure - document root and page sets

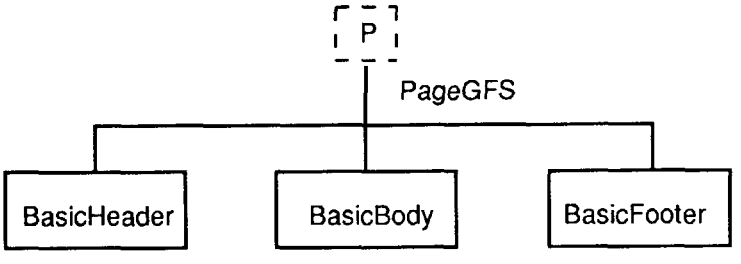

Figure 9 - The layout structure - page structure

Copyright International Organization for Standardization
Provided by IHS under license with ISO
No reproduction or networking permitted without license from IHS
Not for Resale

7.1.3 Notation

This clause is written in accordance with the Document Application Profile Proforma and Notation (DAPPN) of CCITT Rec. T.411 | ISO 8613-1, Annex F. The following clarifications and minor extensions apply :

a) [Clarification]
The value range definition for the attributes "subordinates" and "imaging order" specify the set of object instances that may occur. The ordering and number (which may be zero) of object instances for the attribute "subordinates" must be in accordance with the value of the attribute "generator for subordinates" in the respective object class.

b) [Clarification]
The value "ANY_STRING" may include code extension control functions as well as graphic characters.

c) [Extension]
In order to write the specification of the usage of character sets and code extension control functions precisely, the following extensions are applied:

1) Table 3 defines the symbols that are introduced to denote shift functions.

Table 3 - Symbols to denote shift functions

Symbol	Shift function	Coded representation
LS0	Locking shift zero	00/15
LS1R	Locking shift one right	ESC 07/14
LS2R	Locking shift two right	ESC 07/13
LS3R	Locking shift three right	ESC 07/12
SS2	Single shift two	08/14
SS3	Single shift three	08/15

2) <escape-sequence> is extended to include shift functions:
<escape-sequence> ::= 'ESC' <octet>... [<invocation-control-function>] ;
<invocation-control-function> ::= 'LS0'|'LS1R'|'LS2R'|'LS3R'|'SS2'|'SS3' ;

3) Data type specification for #ESC in content information is extended as:
<escape-sequence>...

Copyright International Organization for Standardization
Provided by IHS under license with ISO
No reproduction or networking permitted without license from IHS
Not for Resale

7.2 Document profile constituent constraints

7.2.1 Macro definitions

```
DEFINE (FC,       "ASN.1{ 2 8 2 6 0 }" -- formatted character content -- )
DEFINE (PC,       "ASN.1{ 2 8 2 6 1 }" -- processable character content -- )
DEFINE (FPC,      "ASN.1{ 2 8 2 6 2 }" -- formatted processable character content -- )

DEFINE (FDA,            " {'formatted'} ")
DEFINE (PDA,            " {'processable'} ")
DEFINE (FPDA,           " {'formatted-processable'} ")
DEFINE (PDA-FPDA,       "{'processable' | 'formatted-processable'}")

DEFINE (DAC,      "DocumentProfile (Document-architecture-class)")

DEFINE(GLAS, "DocumentProfile(Generic-layout-structure)")

DEFINE(COMPLETE," {'complete-generator-set'} ")


DEFINE(BasicPageDimensions, "
                REQ #horizontal-dimension
                 {REQ #fixed-dimension {<=9240}},
                REQ #vertical-dimension
                 {REQ #fixed-dimension {<=12400}}
               | REQ #horizontal-dimension
                 {REQ #fixed-dimension {<=12400}},
                REQ #vertical-dimension
                 {REQ #fixed-dimension {<=9240}}")
```

-- Any size equal to or smaller than CARA(Common Assured Reproduction Area) of ISO A4 and ANSI-A. Both Landscape and Portrait may be specified.
Note that the above macro is defined for clarification of the specification and is not used in any other part of this DAP specification. --

```
DEFINE (NonBasicPageDimensions, "
                REQ #horizontal-dimension
                 {REQ #fixed-dimension {<=14030}},
                REQ #vertical-dimension
                 {REQ #fixed-dimension {12401..19840}}
               | REQ #horizontal-dimension
                 {REQ #fixed-dimension {9241..14030}},
                REQ #vertical-dimension
                 {REQ #fixed-dimension {<=19840}}
                                       -- up to ISO A3 portrait --
               | REQ #horizontal-dimension
                 {REQ #fixed-dimension {12401..19840}},
                REQ #vertical-dimension
                 {REQ #fixed-dimension {<=14030}}
               | REQ #horizontal-dimension
                 {REQ #fixed-dimension {<=19840}},
                REQ #vertical-dimension
                 {REQ #fixed-dimension {9241..14030}}
                                       -- up to ISO A3 landscape --
               | REQ #horizontal-dimension
                 {REQ #fixed-dimension {<=13200}},
                REQ #vertical-dimension
                 {REQ #fixed-dimension {12401..20400}}
               | REQ #horizontal-dimension
```


Copyright International Organization for Standardization
Provided by IHS under license with ISO
No reproduction or networking permitted without license from IHS Not for Resale

```
        {REQ #fixed-dimension {9241..13200}},
       REQ #vertical-dimension
        {REQ #fixed-dimension {<=20400}}
                              -- up to ANSI-B portrait --
      | REQ #horizontal-dimension
        {REQ #fixed-dimension {12401..20400}},
       REQ #vertical-dimension
        {REQ #fixed-dimension {<=13200}}
      | REQ #horizontal-dimension
        {REQ #fixed-dimension {<=20400}},
       REQ #vertical-dimension
        {REQ #fixed-dimension {9241..13200}}          ")
                              -- up to ANSI-B landscape --

DEFINE(PermissiblePageDimensions, "
             REQ #horizontal-dimension
              {REQ #fixed-dimension {<=14030}},
             REQ #vertical-dimension
              {REQ #fixed-dimension {<=19840}}      -- up to ISO A3 portrait --
            | REQ #horizontal-dimension
              {REQ #fixed-dimension {<=19840}},
             REQ #vertical-dimension
              {REQ #fixed-dimension {<=14030}}      -- up to ISO A3 landscape --
            | REQ #horizontal-dimension
              {REQ #fixed-dimension {<=13200}},
             REQ #vertical-dimension
              {REQ #fixed-dimension {<=20400}}      -- up to ANSI-B portrait --
            | REQ #horizontal-dimension
              {REQ #fixed-dimension {<=20400}},
             REQ #vertical-dimension
              {REQ #fixed-dimension {<=13200}}      -- up to ANSI-B landscape --      ")

DEFINE (NominalPageSizes,
      "REQ #horizontal-dimension    {14030},
       REQ #vertical-dimension      {19840}  -    ISO A3 portrait          -
      | REQ #horizontal-dimension   {19840},
       REQ #vertical-dimension      {14030}  -    ISO A3 landscape         -
      | REQ #horizontal-dimension   {9920},
       REQ #vertical-dimension      {14030}  -    ISO A4 portrait          -
      | REQ #horizontal-dimension   {14030},
       REQ #vertical-dimension      {9920}   -    ISO A4 landscape         -
      | REQ #horizontal-dimension   {7015},
       REQ #vertical-dimension      {9920}   -    ISO A5 portrait          -
      | REQ #horizontal-dimension   {9920},
       REQ #vertical-dimension      {7015}   -    ISO A5 landscape         -
      | REQ #horizontal-dimension   {12141},
       REQ #vertical-dimension      {17196}  -- JIS B4(Japanese legal) portrait --
      | REQ #horizontal-dimension   {17196},
       REQ #vertical-dimension      {12141}  -- JIS B4(Japanese legal) landscape --
      | REQ #horizontal-dimension   {8598},
       REQ #vertical-dimension      {12141}  -- JIS B5(Japanese letter) portrait --
      | REQ #horizontal-dimension   {12141},
       REQ #vertical-dimension      {8598}   -- JIS B5(Japanese letter) landscape --
      | REQ #horizontal-dimension   {10200},
       REQ #vertical-dimension      {16800}  -    ANSI legal portrait      -
      | REQ #horizontal-dimension   {16800},
       REQ #vertical-dimension      {10200}  -    ANSI legal landscape     -
```


Copyright International Organization for Standardization
Provided by IHS under license with ISO
No reproduction or networking permitted without license from IHS
Not for Resale

```
| REQ #horizontal-dimension    {10200},
  REQ #vertical-dimension      {13200}  -    ANSI-A portrait        -
| REQ #horizontal-dimension    {13200},
  REQ #vertical-dimension      {10200}  -    ANSI-A landscape       -
| REQ #horizontal-dimension    {13200},
  REQ #vertical-dimension      {20400}  -    ANSI-B portrait        -
| REQ #horizontal-dimension    {20400},
  REQ #vertical-dimension      {13200}  -    ANSI-B landscape       --")

DEFINE(GRAPHICRENDITIONS,"
        {'cancel' | 'increased-intensity' | 'italicised' | 'underlined' | 'crossed-out'
         | 'normal-intensity' | 'not-italicised' | 'not-underlined' | 'not-crossed-out'}... ")

-- Macro defining permissible code extension announcer. Note that all the values are basic. --

DEFINE(CDEXTEN,    " ESC 02/00 05/00,          -- Use G0 & LS0 --
                   [ ESC 02/00 05/03 ],        -- Use G1 & LS1R --
                   [ ESC 02/00 05/05 ],        -- Use G2 & LS2R --
                   [ ESC 02/00 05/07 ],        -- Use G3 & LS3R --
                   [ ESC 02/00 05/10 ],        -- Use G2 & SS2 --
                   [ ESC 02/00 05/11 ]         -- Use G3 & SS3 --      ")

-- Macro defining code extension announcer for DAP defaults  -

DEFINE(DAP-DEFAULT-CDEXTEN,    "$CDEXTEN")

-- Macros defining final character for designation --

DEFINE(FCORE,      "04/02"      -- A final character designating ISO-IR 6 (the IRV of
                                   ISO/IEC 646, i.e. ASCII) --)

DEFINE(F646,       "-- A final character designating any version of ISO/IEC 646, except
                   ISO-IR 6 --")

DEFINE(F94S,       "-- A final character designating any registered 94 single byte graphic
                   character set, optionally preceded by one or more intermediate
                   characters as defined in Annex C of ISO 2022 --")

DEFINE(F94M,       "-- A final character designating any registered 94 multi byte graphic
                   character set, optionally preceded by one or more intermediate
                   characters as defined in Annex C of ISO 2022 --")

DEFINE(F96S,       "-- A final character designating any registered 96 single byte graphic
                   character set, optionally preceded by one or more intermediate
                   characters as defined in Annex C of ISO 2022 --")

DEFINE(F96M,       "-- A final character designating any registered 96 multi byte graphic
                   character set, optionally preceded by one or more intermediate
                   characters as defined in Annex C of ISO 2022 --")

DEFINE(FEMPTY,     "07/14"      -- The empty set --)

-- Macro defining a revision number of a character set --

DEFINE(REV,    "-- An octet between 04/00 and 07/14, which represents a revision number as
```


Copyright International Organization for Standardization
Provided by IHS under license with ISO
No reproduction or networking permitted without license from IHS
Not for Resale

defined in ISO 2022.--")

-- Macros defining designation sequences --

```
DEFINE(DEG-CORE-G0, "ESC 02/08 $FCORE")
                    -- Designate 94 characters of ISO-IR 6 (the IRV of ISO/IEC 646 )
                     to G0 –

DEFINE(DEG-646-G0,  "ESC 02/08 $F646")
                    -- Designate any version of ISO/IEC 646, except ISO-IR 6, to G0 --

DEFINE(DEG-ANY-G1,  "{[ESC 02/06 $REV]
                    {ESC 02/09 $F94S
                    | ESC 02/04 02/09 $F94M
                    | ESC 02/13 $F96S
                    | ESC 02/04 02/13 $F96M}}")
                  -- Designate any character set to G1 --

DEFINE(DEG-ANY-G2,  "{[ESC 02/06 $REV]
                    {ESC 02/10 $F94S
                    | ESC 02/04 02/10 $F94M
                    | ESC 02/14 $F96S
                    | ESC 02/04 02/14 $F96M}}")
                  -- Designate any character set to G2 --

DEFINE(DEG-ANY-G3,  "{[ESC 02/06 $REV]
                    {ESC 02/11 $F94S
                    | ESC 02/04 02/11 $F94M
                    | ESC 02/15 $F96S
                    | ESC 02/04 02/15 $F96M}}")
                  -- Designate any character set to G3 --

DEFINE(DEG-EMPTY-G1, "ESC 02/09 $FEMPTY")
                    -- Designate the empty set to G1 --


-- Macro defining permissible graphic character sets. --

DEFINE(PERMIT-GRCHAR,       "{$DEG-CORE-G0 LS0 | $DEG-646-G0 LS0 },
                            {{$DEG-ANY-G1 LS1R
                            | $DEG-ANY-G2 LS2R
                            | $DEG-ANY-G3 LS3R}...
                            | $DEG-EMPTY-G1 LS1R}        ")


-- Macro defining graphic character sets for DAP defaults --

DEFINE(DAP-DEFAULT-GRCHAR,      "$PERMIT-GRCHAR")


-- Macro defining basic graphic character sets. Note that this macro is defined for clarification of the
specification and is not used in any other part of this DAP specification. --

DEFINE(BASIC-GRCHAR,        "$DEG-CORE-G0 LS0,
                            $DEG-EMPTY-G1 LS1R ")


-- Macro defining non-basic graphic character sets --
```


Copyright International Organization for Standardization
Provided by IHS under license with ISO
No reproduction or networking permitted without license from IHS
Not for Resale

```
DEFINE(NON-BASIC-GRCHAR," {$DEG-646-G0
                        | $DEG-ANY-G1
                        | $DEG-ANY-G2
                        | $DEG-ANY-G3}... ")

-- Macro defining character sets used in document profile attributes --

DEFINE(PROFCHAR, "
    ESC 02/00 04/03                 -- announcement of use of G0 and G1, and
                                    invocation into GL and GR respectively. (no shift
                                    functions are necessary) --
    { $DEG-CORE-G0 | $DEG-646-G0 }  -- designate G0 --
    { $DEG-ANY-G1 | $DEG-EMPTY-G1 } -- designate G1 --
")

-- Macro defining comments character sets --

DEFINE(COMCHAR, "
      -- in the case to use both GL and GR without shift functions --
      ESC 02/00 04/03               -- announcement of use of G0 and G1, and
                                    invocation into GL and GR respectively. (no shift
                                    functions are necessary) --
      { $DEG-CORE-G0 | $DEG-646-G0 } -- designate G0 --
      {$DEG-ANY-G1 | $DEG-EMPTY-G1} -- designate G1 --

    | -- in the case of use of various character sets (shift functions are necessary) --
      {ESC 02/00 05/00,             -- announcement to use G0 and LS0     -
      [ESC 02/00 05/03],            -- announcement to use G1 and LS1R    -
      [ESC 02/00 05/05],            -- announcement to use G2 and LS2R    -
      [ESC 02/00 05/07],            -- announcement to use G3 and LS3R    -
      [ESC 02/00 05/10],            -- announcement to use G2 and SS2     -
      [ESC 02/00 05/11]       }     -- announcement to use G3 and SS3     -

      { $DEG-CORE-G0 | $DEG-646-G0 } -- designate G0 --

      {{$DEG-ANY-G1                 -- designate G1 --
      | $DEG-ANY-G2                 -- designate G2 --
      | $DEG-ANY-G3}...             -- designate G3 --
      | $DEG-EMPTY-G1}
")

-- Macro defining character sets used for alternative representation --

DEFINE(ALTCHAR,     "$PROFCHAR")
```


Copyright International Organization for Standardization
Provided by IHS under license with ISO
No reproduction or networking permitted without license from IHS
Not for Resale

7.2.2 Constituent constraints

7.2.2.1 DocumentProfile

```
{
CASE $DAC OF {

    $FDA:  PERM   Generic-layout-structure      {'factor-set'},
           REQ    Specific-layout-structure     {'present'},
           PERM   Presentation-styles           {'present'}

    $PDA:  PERM   Generic-layout-structure      {'complete-generator-set'},
           REQ    Generic-logical-structure     {'complete-generator-set'
                                                | 'partial-generator-set'},
           REQ    Specific-logical-structure    {'present'},
           PERM   Presentation-styles           {'present'},
           PERM   Layout-styles                 {'present'}

    $FPDA: REQ    Generic-layout-structure      {'complete-generator-set'},
           REQ    Specific-layout-structure     {'present'},
           REQ    Generic-logical-structure     {'complete-generator-set'
                                                | 'partial-generator-set'},
           REQ    Specific-logical-structure    {'present'},
           PERM   Presentation-styles           {'present'},
           REQ    Layout-styles                 {'present'}
},

-- Document characteristics --

REQ    Document-application-profile          {-- See clause 8 for a definition of the
                                               permitted values for this attribute --},

PERM   Document-application-profile-defaults  {
    CASE $DAC OF {
        $FDA:    {PERM  #content-architecture-class   {$FC | $FPC} }
        $PDA:    {PERM  #content-architecture-class   {$FC | $PC | $FPC} }
        $FPDA:   {PERM  #content-architecture-class   {$FC | $FPC} }
    },

    PERM  #dimensions          {$PermissiblePageDimensions},

    PERM  #medium-type         {PERM #nominal-page-size    {$NominalPageSizes},
                                PERM #side-of-sheet        {ANY_VALUE}},

    PERM  #page-position       {ANY_VALUE},

    PERM  #character-content-defaults {
        PERM   #alignment                       {ANY_VALUE},
        PERM   #character-path                  {'0-degrees' | '180-degrees'},
        PERM   #character-spacing               {80 | 100 | 120 | 160 | 200} ,
        PERM   #code-extension-announcers       {$DAP-DEFAULT-CDEXTEN},
        PERM   #first-line-offset               {ANY_VALUE},
        PERM   #graphic-character-sets          {$DAP-DEFAULT-GRCHAR},
        PERM   #graphic-character-subrepertoire {ANY_VALUE},
        PERM   #graphic-rendition               {$GRAPHICRENDITIONS},
        PERM   #itemization                     {ANY_VALUE},
        PERM   #line-layout-table               {ANY_VALUE},
        PERM   #line-progression                {'90-degrees' | '270-degrees'},
```


Copyright International Organization for Standardization
Provided by IHS under license with ISO
No reproduction or networking permitted without license from IHS
Not for Resale

```
        PERM    #line-spacing                       {100 | 150 | 200 | 300 | 400 },
        PERM    #initial-offset                     {ANY_VALUE},
        PERM    #indentation                        {ANY_VALUE},
        PERM    #orphan-size                        {ANY_VALUE},
        PERM    #widow-size                         {ANY_VALUE}
        }
},

REQ     Document-architecture-class     {$FDA | $PDA  | $FPDA},
REQ     Content-architecture-classes    {[$FC], [$PC], [$FPC]},
REQ     Interchange-format-class        {-- See clause 8 for a definition of the
                                                permitted values for this attribute  --},
REQ     Oda-version     {REQ #standard-or-recommendation
                                {"CCITT Rec. T.410 series(1988)|ISO 8613(1989); version 1.1"},
                        REQ #publication-date           {"1992-01-01"}},


-- Non-basic document characteristics --

PERM  Profile-character-sets                        {$PROFCHAR},
PERM  Comments-character-sets                       {$COMCHAR},
PERM  Alternative-representation-character-sets     {$ALTCHAR},
PERM  Page-dimensions                               {PMUL {$NonBasicPageDimensions}},
PERM  Medium-types                                  {PMUL
                                                      {PERM #nominal-page-size
                                                                {$NominalPageSizes},
                                                -- All permissible page sizes are non-basic. --
                                                      PERM #side-of-sheet   {'recto'|'verso'}}
},

PERM  Presentation-features             {
    PERM  #character-presentation-features {
        PERM #character-path                        {'180-degrees'},
        PERM #line-progression                      {'90-degrees'},
        PMUL {PERM    #graphic-character-sets       {$NON-BASIC-GRCHAR} },
        PMUL {PERM    #graphic-character-subrepertoire      {ANY_VALUE} },
        PMUL {PERM    #character-spacing            {80 |100 | 160 | 200} },
        PMUL {PERM    #line-spacing                 {100 | 150} },
        PMUL {PERM    #graphic-rendition            {'crossed-out'| 'not-crossed-out'} }
    }
},

-- Document management attributes --

-- Document description --

PERM  Title                             {ANY_STRING},
PERM  Subject                           {ANY_STRING},
PERM  Document-type                     {ANY_STRING},
PERM  Abstract                          {ANY_STRING},
PERM  Keywords                          {ANY_STRING...},
REQ   Document-reference                {ANY_VALUE},

-- Dates and times --

PERM  Document-date-and-time            {ANY_STRING},
PERM  Creation-date-and-time            {ANY_STRING},
PERM  Local-filing-date-and-time        {ANY_VALUE},
PERM  Expiry-date-and-time              {ANY_STRING},
```


Copyright International Organization for Standardization
Provided by IHS under license with ISO
No reproduction or networking permitted without license from IHS
Not for Resale

```
PERM  Start-date-and-time                {ANY_STRING},
PERM  Purge-date-and-time                {ANY_STRING},
PERM  Release-date-and-time              {ANY_STRING},
PERM  Revision-history                   {ANY_VALUE},

-- Originators --

PERM  Organizations                      {ANY_STRING...},
PERM  Preparers                          {ANY_VALUE},
PERM  Owners                             {ANY_VALUE},
PERM  Authors                            {ANY_VALUE},

-- Other user information --

PERM  Copyright                          {ANY_VALUE},
PERM  Status                             {ANY_STRING},
PERM  User-specific-codes                {ANY_STRING...},
PERM  Distribution-list                  {ANY_VALUE},
PERM  Additional-information             {ANY_VALUE},

-- External references --

PERM  References-to-other-documents  {ANY_VALUE},
PERM  Superseded-documents           {ANY_VALUE},

-- Local file references --

PERM  Local-file-references              {ANY_VALUE},

-- Content attributes --

PERM  Document-size                      {ANY_INTEGER},
PERM  Number-of-pages                    {ANY_INTEGER},
PERM  Languages                          {ANY_STRING...},

-- Security information --

PERM  Authorization                      {ANY_VALUE},
PERM  Security-classification            {ANY_STRING},
PERM  Access-rights                      {ANY_STRING...}
}
```


Copyright International Organization for Standardization
Provided by IHS under license with ISO
No reproduction or networking permitted without license from IHS
Not for Resale

7.3 Logical constituent constraints

7.3.1 Macro definitions

```
DEFINE (DocLogRootGFS, "
    <construction-expr>::=      REP    OBJECT_CLASS_ID_OF(Passage); ")

DEFINE (PassageGFS, "
    <construction-expr>::=      REP    OBJECT_CLASS_ID_OF(BodyText); ")


DEFINE (CommonContentGFS, "
    <construction-expr>::=      <construction-factor>  | SEQ(<construction-factor>...);

    <construction-factor>::=    OBJECT_CLASS_ID_OF(PageNumber)
                               | OBJECT_CLASS_ID_OF(CommonText);        ")


DEFINE (PGNUMBER, "
    <string-expr> ::=  [ANY_STRING] <str-exp> [ANY_STRING] ;

    <str-exp>      ::=  MAKE-STRING(<num-exp>)
                      | UPPER-ALPHA(<num-exp>)
                      | LOWER-ALPHA(<num-exp>)
                      | UPPER-ROMAN(<num-exp>)
                      | LOWER-ROMAN(<num-exp>);

    <num-exp>   ::= B_REF(SUP(CURR-INST('frame', (CURR-OBJ))))(""PGnum"");")


DEFINE(DocumentLogicalRoot," REQ  #constraint-name      {""0""},
                           PERM  #external-data         {ANY_VALUE}")

DEFINE(Passage,             "REQ  #constraint-name      {""1""},
                           PERM  #external-data         {ANY_VALUE}")

DEFINE(BodyText,            "REQ  #constraint-name      {""14""},
                           PERM  #external-data         {ANY_VALUE}")

DEFINE(CommonContent,       "REQ  #constraint-name      {""19""},
                           PERM  #external-data         {ANY_VALUE}")

DEFINE(CommonText,          "REQ  #constraint-name      {""20""},
                           PERM  #external-data         {ANY_VALUE}")

DEFINE(PageNumber,          "REQ  #constraint-name      {""40""},
                           PERM  #external-data         {ANY_VALUE}")
```

7.3.2 Factor constraints

7.3.2.1 FACTOR ANY-LOGICAL

```
{
GENERIC:
    REQ     Object-type                 {VIRTUAL},
    REQ     Object-class-identifier     {ANY_VALUE}

SPECIFIC:
```


Copyright International Organization for Standardization
Provided by IHS under license with ISO
No reproduction or networking permitted without license from IHS
Not for Resale

```
    PERM    Object-type                 {VIRTUAL},
    REQ     Object-identifier           {ANY_VALUE},
    REQ     Object-class                {VIRTUAL}

SPECIFIC_AND_GENERIC:
    PERM    User-readable-comments      {ANY_STRING},
    PERM    User-visible-name           {ANY_STRING}
}
```

7.3.3 Constituent constraints

7.3.3.1 DocumentLogicalRoot

```
: ANY-LOGICAL {
GENERIC:
    REQ     Object-type                 {'document-logical-root'},
    REQ     Generator-for-subordinates  {$DocLogRootGFS},
    REQ     Application-comments        {$DocumentLogicalRoot}

SPECIFIC:
    PERM    Object-type                 {'document-logical-root'},
    REQ     Object-class                {OBJECT_CLASS_ID_OF
                                            (DocumentLogicalRoot)},
    REQ     Subordinates                {SUB_ID_OF(Passage)+},
    PERM    Application-comments        {$DocumentLogicalRoot}
}
```

7.3.3.2 Passage

```
: ANY-LOGICAL {
GENERIC:
    REQ     Object-type                 {'composite-logical-object'},
    REQ     Generator-for-subordinates  {$PassageGFS},
    REQ     Application-comments        {$Passage}

SPECIFIC:
    PERM    Object-type                 {'composite-logical-object'},
    REQ     Object-class                {OBJECT_CLASS_ID_OF(Passage)},
    REQ     Subordinates                {SUB_ID_OF(BodyText)+},
    CASE $GLAS OF {
        $COMPLETE :
            REQ     Layout-style        {STYLE_ID_OF(L-Style1)}
        VOID :
            PERM    Layout-style        {STYLE_ID_OF(L-Style1)}
    },
    PERM    Application-comments        {$Passage}
}
```

7.3.3.3 BodyText

```
: ANY-LOGICAL {
GENERIC:
    REQ     Object-type                 {'basic-logical-object'},
    REQ     Application-comments        {$BodyText}

SPECIFIC:
```


Copyright International Organization for Standardization
Provided by IHS under license with ISO
No reproduction or networking permitted without license from IHS
Not for Resale

```
    PERM    Object-type                 {'basic-logical-object'},
    REQ     Object-class                {OBJECT_CLASS_ID_OF(BodyText)},
    REQ     Content-portions            {CONTENT_ID_OF
                                            (Character-content-portion)+} ,
    PERM    Presentation-style          {STYLE_ID_OF(P-Style1)},
    PERM    Content-architecture-class  {$FC | $PC | $FPC},
    PERM    Layout-style                {STYLE_ID_OF(L-Style2)},
    PERM    Application-comments        {$BodyText}
}
```

7.3.3.4 CommonContent

```
{
GENERIC:
    REQ     Object-type                 {'composite-logical-object'},
    REQ     Object-class-identifier     {ANY_VALUE},
    REQ     Generator-for-subordinates  {$CommonContentGFS},
    REQ     Application-comments        {$CommonContent},
    PERM    User-readable-comments      {ANY_STRING},
    PERM    User-visible-name           {ANY_STRING}
}
```

7.3.3.5 CommonText

```
{
GENERIC:
    REQ     Object-type                 {'basic-logical-object'},
    REQ     Object-class-identifier     {ANY_VALUE},
    REQ     Content-portions            {CONTENT_ID_OF
                                            (Character-content-portion)},
    PERM    Presentation-style          {STYLE_ID_OF(P-Style4)},
    PERM    Content-architecture-class  {$FC | $PC | $FPC},
    PERM    Layout-style                {STYLE_ID_OF(L-Style3)},
    REQ     Application-comments        {$CommonText},
    PERM    User-readable-comments      {ANY_STRING},
    PERM    User-visible-name           {ANY_STRING}
}
```

7.3.3.6 PageNumber

```
{
GENERIC:
    REQ     Object-type                 {'basic-logical-object'},
    REQ     Object-class-identifier     {ANY_VALUE},
    REQ     Content-generator           {$PGNUMBER},
    PERM    Presentation-style          {STYLE_ID_OF(P-Style4)},
    PERM    Content-architecture-class  {$FC | $PC | $FPC},
    PERM    Layout-style                {STYLE_ID_OF(L-Style3)},
    REQ     Application-comments        {$PageNumber},
    PERM    User-readable-comments      {ANY_STRING},
    PERM    User-visible-name           {ANY_STRING}
}
```


Copyright International Organization for Standardization
Provided by IHS under license with ISO
No reproduction or networking permitted without license from IHS
Not for Resale

7.4 Layout constituent constraints

7.4.1 Macro definitions

```
DEFINE (DocLayRootGFS, "
    <construction-expr> ::=     REP  CHO({OBJECT_CLASS_ID_OF(PageSet)}...);
")


DEFINE (PageSetGFS , "<construction-expr> ::= <constraint-1>
                                            | <constraint-2>
                                            | <constraint-3>
                                            | <constraint-4>
                                            | <constraint-5>;

<constraint-1>    ::=   OBJECT_CLASS_ID_OF(Page);

<constraint-2>    ::=   REP  OBJECT_CLASS_ID_OF(Page);

<constraint-3>    ::=   REP  SEQ(OBJECT_CLASS_ID_OF(RectoPage)
                            OPT  OBJECT_CLASS_ID_OF(VersoPage))
                        |REP  SEQ(OBJECT_CLASS_ID_OF(VersoPage)
                            OPT  OBJECT_CLASS_ID_OF(RectoPage));

<constraint-4>    ::=   SEQ(OBJECT_CLASS_ID_OF(Page)
                            OPT REP  OBJECT_CLASS_ID_OF(Page)  );

<constraint-5>    ::=   SEQ(OBJECT_CLASS_ID_OF(Page)
                            OPT REP  SEQ(OBJECT_CLASS_ID_OF(RectoPage)
                                OPT OBJECT_CLASS_ID_OF(VersoPage))     )
                        | SEQ(OBJECT_CLASS_ID_OF(Page)
                            OPT REP  SEQ(OBJECT_CLASS_ID_OF(VersoPage)
                                OPT OBJECT_CLASS_ID_OF(RectoPage))     );
")


DEFINE (PageGFS, "
    <construction-expr> ::=     SEQ([OBJECT_CLASS_ID_OF (BasicHeader)]
                                    OBJECT_CLASS_ID_OF (BasicBody)
                                    [OBJECT_CLASS_ID_OF (BasicFooter) ]);
")


DEFINE(INITIALISEPGNUM, "
        REQ     #binding-name       {""PGnum""},
        REQ     #binding-value      {>=-1}
")

DEFINE(PAGENUMBER, "
        REQ     #binding-name       {""PGnum""},
        REQ     #binding-value      {<string-expr> ::=
                                        INC(B_REF(PREC(CURR-OBJ)) (""PGnum""));}
")


DEFINE(DocumentLayoutRoot, "REQ  #constraint-name      {""0""},
                            PERM  #external-data       {ANY_VALUE}")

DEFINE(PageSet,             "REQ  #constraint-name      {""1""},
```


Copyright International Organization for Standardization
Provided by IHS under license with ISO
No reproduction or networking permitted without license from IHS
Not for Resale

```
                                PERM  #external-data          {ANY_VALUE}")

DEFINE(Page,                    "REQ  #constraint-name        {""2""},
                                PERM  #external-data          {ANY_VALUE}")

DEFINE(RectoPage,               "REQ  #constraint-name        {""3""},
                                PERM  #external-data          {ANY_VALUE}")

DEFINE(VersoPage,               "REQ  #constraint-name        {""4""},
                                PERM  #external-data          {ANY_VALUE}")

DEFINE(BasicHeader,             "REQ  #constraint-name        {""27""},
                                PERM  #external-data          {ANY_VALUE}")

DEFINE(BasicBody,               "REQ  #constraint-name        {""28""},
                                PERM  #external-data          {ANY_VALUE}")

DEFINE(SpecificBlock,           "REQ  #constraint-name        {""30""},
                                PERM  #external-data          {ANY_VALUE}")

DEFINE(BasicFooter,             "REQ  #constraint-name        {""33""},
                                PERM  #external-data          {ANY_VALUE}")
```

7.4.2 Factor constraints

7.4.2.1 FACTOR ANY-COMPOSITE-LAYOUT

```
{
GENERIC:
    REQ     Object-type                 {VIRTUAL},
    REQ     Object-class-identifier     {ANY_VALUE}

SPECIFIC:
    PERM    Object-type                 {VIRTUAL},
    REQ     Object-identifier           {ANY_VALUE}

SPECIFIC_AND_GENERIC:
    PERM    User-readable-comments      {ANY_STRING},
    PERM    User-visible-name           {ANY_STRING}
}
```

7.4.2.2 FACTOR ANY-PAGE

```
: ANY-COMPOSITE-LAYOUT  {
GENERIC:
    REQ     Object-type                 {'page'},
    CASE $DAC OF {
        $PDA-FPDA :
            PERM    Bindings                        {$PAGENUMBER},
            REQ     Generator-for-subordinates      {$PageGFS}
    }

SPECIFIC:
    PERM    Object-type                 {'page'},
    REQ     Subordinates                {SUB_ID_OF(BasicHeader),
                                         SUB_ID_OF(BasicBody),
                                         SUB_ID_OF(BasicFooter)}
```


Copyright International Organization for Standardization
Provided by IHS under license with ISO
No reproduction or networking permitted without license from IHS
Not for Resale

```
SPECIFIC_AND_GENERIC:
    PERM    Dimensions                  {$PermissiblePageDimensions},
    PERM    Page-position               {ANY_VALUE}
}
```

7.4.2.3 FACTOR ANY-FRAME

```
: ANY-COMPOSITE-LAYOUT  {
GENERIC:
    REQ     Object-type             {'frame'}

SPECIFIC:
    PERM    Object-type             {'frame'},
    REQ     Subordinates            {SUB_ID_OF(SpecificBlock)+}

SPECIFIC_AND_GENERIC:
    PERM    Position                {REQ #fixed-position
                                        {REQ #horizontal-position {ANY_VALUE},
                                        REQ #vertical-position {ANY_VALUE}}},
    PERM    Dimensions              {REQ #horizontal-dimension
                                        {REQ #fixed-dimension {ANY_VALUE}},
                                     REQ #vertical-dimension
                                        {REQ #fixed-dimension {ANY_VALUE}}}
}
```

7.4.3 Constituent constraints

7.4.3.1 DocumentLayoutRoot

```
: ANY-COMPOSITE-LAYOUT {
GENERIC:
    REQ     Object-type                     {'document-layout-root'},
    CASE $DAC OF {
        $PDA-FPDA :
            PERM    Bindings                        {$INITIALISEPGNUM},
            REQ     Generator-for-subordinates      {$DocLayRootGFS}
    },
    REQ     Application-comments            {$DocumentLayoutRoot}

SPECIFIC:
    PERM    Object-type                     {'document-layout-root'},
    CASE $DAC OF {
        $FDA:   PERM  Object-class  {OBJECT_CLASS_ID_OF(DocumentLayoutRoot)}
        $FPDA:  REQ   Object-class  {OBJECT_CLASS_ID_OF(DocumentLayoutRoot)}
    },
    REQ     Subordinates                    {SUB_ID_OF (PageSet)+},
    PERM    Application-comments            {$DocumentLayoutRoot}
}
```


Copyright International Organization for Standardization
Provided by IHS under license with ISO
No reproduction or networking permitted without license from IHS
Not for Resale

7.4.3.2 PageSet

```
: ANY-COMPOSITE-LAYOUT  {
GENERIC:
    REQ     Object-type                         {'page-set'},
    CASE $DAC OF {
        $PDA-FPDA :
            PERM    Bindings                        {$INITIALISEPGNUM},
            REQ     Generator-for-subordinates      {$PageSetGFS}
    },
    REQ     Application-comments                {$PageSet}

SPECIFIC:
    PERM    Object-type                         {'page-set'},
    CASE $DAC OF {
      $FDA:     PERM  Object-class              {OBJECT_CLASS_ID_OF (PageSet)}
      $FPDA:    REQ   Object-class              {OBJECT_CLASS_ID_OF (PageSet)}
    },
    REQ     Subordinates                        {SUB_ID_OF (Page)+,
                                                 SUB_ID_OF (RectoPage)+,
                                                 SUB_ID_OF (VersoPage)+ },
    PERM    Application-comments                {$PageSet}
}
```

7.4.3.3 Page

```
: ANY-PAGE   {
GENERIC:
    REQ     Application-comments                {$Page}

SPECIFIC:
    CASE $DAC OF {
      $FDA:   PERM  Object-class                {OBJECT_CLASS_ID_OF(Page)}
      $FPDA:  REQ   Object-class                {OBJECT_CLASS_ID_OF(Page)}
     },
    PERM    Application-comments                {$Page}

SPECIFIC_AND_GENERIC:
    PERM    Medium-type                         {PERM #nominal-page-size
                                                          {$NominalPageSizes},
                                                PERM #side-of-sheet   {ANY_VALUE}}
}
```

7.4.3.4 RectoPage

```
: ANY-PAGE   {
GENERIC:
    REQ     Application-comments                {$RectoPage},
    REQ     Medium-type                         {PERM #nominal-page-size
                                                          {$NominalPageSizes},
                                                 REQ #side-of-sheet   {'recto' | 'unspecified'}}

SPECIFIC:
    CASE $DAC OF {
      $FDA:   PERM  Object-class                {OBJECT_CLASS_ID_OF (RectoPage)}
      $FPDA:  REQ   Object-class                {OBJECT_CLASS_ID_OF (RectoPage)}
     },
```


Copyright International Organization for Standardization
Provided by IHS under license with ISO
No reproduction or networking permitted without license from IHS
Not for Resale

```
    PERM    Application-comments        {$RectoPage},
    PERM    Medium-type                 {PERM #nominal-page-size
                                                {$NominalPageSizes},
                                        PERM #side-of-sheet   {'recto' | 'unspecified'}}
}
```

7.4.3.5 VersoPage

```
: ANY-PAGE   {
GENERIC:
    REQ     Application-comments        {$VersoPage},
    REQ     Medium-type                 {PERM #nominal-page-size
                                                {$NominalPageSizes},
                                         REQ #side-of-sheet   {'verso' | 'unspecified'}}

SPECIFIC:
    CASE $DAC OF {
      $FDA:   PERM  Object-class        {OBJECT_CLASS_ID_OF (VersoPage)}
      $FPDA:  REQ   Object-class        {OBJECT_CLASS_ID_OF (VersoPage)}
    },
    PERM    Application-comments        {$VersoPage},
    PERM    Medium-type                 {PERM #nominal-page-size
                                                {$NominalPageSizes},
                                         PERM #side-of-sheet   {'verso' | 'unspecified'}}
}
```

7.4.3.6 BasicHeader

```
: ANY-FRAME         {
GENERIC:
    CASE $DAC OF {
        $PDA-FPDA :
            REQ Logical-source      {OBJECT_CLASS_ID_OF (CommonContent)}
    },
    REQ     Application-comments    {$BasicHeader}

SPECIFIC:
    CASE $DAC OF {
      $FDA:   PERM  Object-class    {OBJECT_CLASS_ID_OF (BasicHeader)}
      $FPDA:  REQ   Object-class    {OBJECT_CLASS_ID_OF (BasicHeader)}
    },
    PERM    Application-comments    {$BasicHeader}
}
```

7.4.3.7 BasicBody

```
: ANY-FRAME {
GENERIC:
    REQ     Application-comments    {$BasicBody}

SPECIFIC:
    CASE $DAC OF {
      $FDA:   PERM  Object-class    {OBJECT_CLASS_ID_OF (BasicBody)}
      $FPDA:  REQ   Object-class    {OBJECT_CLASS_ID_OF (BasicBody)}
    },
    PERM    Application-comments    {$BasicBody}
```


Copyright International Organization for Standardization
Provided by IHS under license with ISO
No reproduction or networking permitted without license from IHS
Not for Resale

```
}
```

7.4.3.8 BasicFooter

```
: ANY-FRAME          {
GENERIC:
    CASE $DAC OF {
        $PDA-FPDA :
                REQ Logical-source      {OBJECT_CLASS_ID_OF (CommonContent)}
    },
    REQ     Application-comments        {$BasicFooter}

SPECIFIC:
    CASE $DAC OF {
      $FDA:   PERM  Object-class        {OBJECT_CLASS_ID_OF (BasicFooter)}
      $FPDA:  REQ   Object-class        {OBJECT_CLASS_ID_OF (BasicFooter)}
    },
    PERM    Application-comments        {$BasicFooter}
}
```

7.4.3.9 SpecificBlock

```
{
SPECIFIC:
    REQ     Object-type                 {'block'},
    REQ     Object-identifier           {ANY_VALUE},
    REQ     Content-portions            {CONTENT_ID_OF(Character-content-portion)+},
    PERM    Presentation-style          {STYLE_ID_OF(P-Style1)
                                        |STYLE_ID_OF(P-Style4)},
    PERM    Content-architecture-class  {$FC  | $FPC},

    PERM    Presentation-attributes     {
        PERM  #character-attributes     {
              PERM    #alignment                            {ANY_VALUE},
              PERM    #character-path                       {'0-degrees'|'180-degrees'},
              PERM    #character-spacing                    {80 | 100 | 120 | 160 | 200 },
              PERM    #code-extension-announcers            {$CDEXTEN},
              PERM    #first-line-offset                    {ANY_VALUE},
              PERM    #graphic-character-sets               {$PERMIT-GRCHAR},
              PERM    #graphic-character-subrepertoire      {ANY_VALUE},
              PERM    #graphic-rendition                    {$GRAPHICRENDITIONS},
              PERM    #itemization                          {ANY_VALUE},
              PERM    #line-layout-table                    {ANY_VALUE},
              PERM    #line-progression                     {'90-degrees' | '270-degrees'},
              PERM    #line-spacing                         {100 |150  | 200 | 300 | 400 },
              PERM    #initial-offset                       {ANY_VALUE}
        }
    },

    PERM    User-readable-comments  {ANY_STRING},
    PERM    User-visible-name       {ANY_STRING},
    PERM    Position                {REQ #fixed-position
                                            {REQ #horizontal-position   {ANY_VALUE},
                                             REQ #vertical-position     {ANY_VALUE}}},
    PERM    Dimensions              {REQ #horizontal-dimension
                                            {REQ #fixed-dimension       {ANY_VALUE}},
                                     REQ #vertical-dimension
```


Copyright International Organization for Standardization
Provided by IHS under license with ISO
No reproduction or networking permitted without license from IHS
Not for Resale

{REQ #fixed-dimension {ANY_VALUE}}},
PERM Application-comments {$SpecificBlock} }

-- Each block in a BasicBody shall reference only one content portion. --
-- A block in a BasicHeader or BasicFooter may reference any number of content portions. --

7.5 Layout style constituent constraints

7.5.1 Macro definitions

-- No macro definitions are applicable in this clause. --

7.5.2 Factor constraints

7.5.2.1 FACTOR ANY-LAYOUT-STYLE

```
{
REQ   Layout-style-identifier        {ANY_VALUE},
PERM  User-readable-comments         {ANY_STRING},
PERM  User-visible-name              {ANY_STRING}
}
```

7.5.3 Constituent constraints

7.5.3.1 L-Style1

```
: ANY-LAYOUT-STYLE          {

-- This style is used for the constituent constraints Passage only. --

CASE $GLAS OF {
    $COMPLETE:
        PERM  Indivisibility          {'page' -- to layout object type --
                                       | 'null'},
        REQ   Layout-object-class     {OBJECT_CLASS_ID_OF (PageSet) }
    VOID:
        PERM  Indivisibility          {'page' -- to layout object type --
                                       | 'null'}
}}
```

7.5.3.2 L-Style2

```
: ANY-LAYOUT-STYLE          {

-- This style is used for the constituent constraints BodyText only. --

CASE $GLAS OF {
    $COMPLETE:
        PERM  Indivisibility          {'page' -- to layout object type --
                                       | 'null'},
        PERM  New-layout-object       {{OBJECT_CLASS_ID_OF (Page)
                                       | OBJECT_CLASS_ID_OF (RectoPage)
                                       | OBJECT_CLASS_ID_OF (VersoPage)
                                       | OBJECT_CLASS_ID_OF (BasicBody)
                                            -- to layout object class -- }
```


Copyright International Organization for Standardization
Provided by IHS under license with ISO
No reproduction or networking permitted without license from IHS
Not for Resale

```
                                    | 'page'  -- to layout object type --
                                    | 'null'},
        PERM  Offset                {ANY_VALUE},
        PERM  Same-layout-object    {REQ {REQ #logical-object
                                          {<object-id-expr>::= PREC-OBJ(CURR-OBJ);}
                                        | REQ #logical-object  {' null'}},
                                    PERM #layout-object    {'page'}},
        PERM  Separation            {PERM  #leading-edge  {ANY_INTEGER},
                                     PERM  #trailing-edge   {ANY_INTEGER}}
    VOID:
        PERM  Indivisibility        {'page'  -- to layout object type --
                                    | 'null'},
        PERM  New-layout-object     {'page'  -- to layout object type--
                                    | 'null'},
        PERM  Offset                {ANY_VALUE},
        PERM  Same-layout-object    {REQ {REQ #logical-object
                                          {<object-id-expr>::= PREC-OBJ(CURR-OBJ);}
                                        | REQ #logical-object  {' null'}},
                                    PERM #layout-object    {'page'}},
        PERM  Separation            {PERM #leading-edge   {ANY_INTEGER},
                                     PERM #trailing-edge   {ANY_INTEGER}}
}}
```

7.5.3.3 L-Style3

```
: ANY-LAYOUT-STYLE          {

-- This style is used for the constituent constraints CommonText and PageNumber. --

PERM  Concatenation             {ANY_VALUE},
PERM  Offset                    {ANY_VALUE},
PERM  Separation                {PERM #leading-edge  {ANY_INTEGER},
                                 PERM #trailing-edge   {ANY_INTEGER}}
}
```

7.6 Presentation style constituent constraints

7.6.1 Macro definitions

-- No macro definitions are applicable in this clause. --

7.6.2 Factor constituent constraints

7.6.2.1 FACTOR ANY-PRESENTATION-STYLE

```
{
REQ   Presentation-style-identifier   {ANY_VALUE},
PERM  User-readable-comments          {ANY_STRING},
PERM  User-visible-name               {ANY_STRING}
}
```


Copyright International Organization for Standardization
Provided by IHS under license with ISO
No reproduction or networking permitted without license from IHS
Not for Resale

7.6.3 Constituent constraints

7.6.3.1 P-Style1

```
: ANY-PRESENTATION-STYLE {

-- This style is used for the constituent constraints BodyText and SpecificBlock.--

PERM  Presentation-attributes {
    PERM  #character-attributes                {
        PERM    #alignment                          {ANY_VALUE},
        PERM    #character-path                     {'0-degrees' | '180-degrees'},
        PERM    #character-spacing                  {80 | 100 | 120 |160 | 200},
        PERM    #code-extension-announcers          {$CDEXTEN},
        PERM    #first-line-offset                  {ANY_VALUE},
        PERM    #graphic-character-sets             {$PERMIT-GRCHAR},
        PERM    #graphic-character-subrepertoire    {ANY_VALUE},
        PERM    #graphic-rendition                  {$GRAPHICRENDITIONS},
        PERM    #itemization                        {ANY_VALUE},
        PERM    #line-layout-table                  {ANY_VALUE},
        PERM    #line-progression                   {'90-degrees' | '270-degrees'},
        PERM    #line-spacing                       {100 | 150 | 200 | 300 | 400 },
        PERM    #indentation                        {ANY_VALUE},
        PERM    #orphan-size                        {ANY_VALUE},
        PERM    #widow-size                         {ANY_VALUE}
    }
}}
```

7.6.3.2 P-Style2

-- This presentation style is not used.--

7.6.3.3 P-Style3

-- This presentation style is not used.--

7.6.3.4 P-Style4

```
: ANY-PRESENTATION-STYLE {

-- This style is used for the constituent constraints CommonText, PageNumber and
SpecificBlock.--

PERM  Presentation-attributes {
    PERM  #character-attributes                {
        PERM    #alignment                          {ANY_VALUE},
        PERM    #character-path                     {'0-degrees' | '180-degrees'},
        PERM    #character-spacing                  {80 | 100 | 120 |160 | 200},
        PERM    #code-extension-announcers          {$CDEXTEN},
        PERM    #first-line-offset                  {ANY_VALUE},
        PERM    #graphic-character-sets             {$PERMIT-GRCHAR},
        PERM    #graphic-character-subrepertoire    {ANY_VALUE},
        PERM    #graphic-rendition                  {$GRAPHICRENDITIONS},
        PERM    #itemization                        {ANY_VALUE},
        PERM    #line-layout-table                  {ANY_VALUE},
        PERM    #line-progression                   {'90-degrees' | '270-degrees'},
```


Copyright International Organization for Standardization
Provided by IHS under license with ISO
No reproduction or networking permitted without license from IHS
Not for Resale

```
        PERM    #line-spacing                   {100 | 150 | 200 | 300 | 400 },
        PERM    #indentation                    {ANY_VALUE}
    }
}}
```

7.7 Content portion constituent constraints

7.7.1 Macro definitions

-- No macro definitions are applicable in this subclause.--

7.7.2 Factor constraints

-- No factor constraints are applicable in this subclause.--

7.7.3 Constituent constraints

7.7.3.1 Character-content-portion

```
{
CASE $DAC OF {
    $FDA :
        REQ   Content-identifier-layout       {ANY_VALUE}

    $PDA :
        REQ   Content-identifier-logical      {ANY_VALUE}

                    -- This attribute is specified, if the content portion is associated with a basic
                    logical object or a basic logical object class. --

    $FPDA :
        REQ   Content-identifier-layout       {ANY_VALUE},
        REQ   Content-identifier-logical      {ANY_VALUE}

                    -- Both attributes are specified, if the content portion is associated with a
                    basic logical object and a basic layout object. --

        | REQ  Content-identifier-logical      {ANY_VALUE}

                    -- This attribute is specified, if the content portion is associated with a basic
                    logical object class.--
},

PERM  Alternative-representation      {ANY_STRING},
PERM  Content-information             {CHARACTER
                        {#STAB        {ANY_VALUE}
                        | #SHS        { 0 | 1 | 2 | 3 }     -- 120, 100, 80 or 200 BMU --
                        | #SCS        {80 | 100 | 120 | 160 | 200}
                        | #SGR        {$GRAPHICRENDITIONS}
                        | #SVS        { 0 | 1 | 2 | 3 | 4 }  -- 200, 300, 400, 100 or 150 BMU --
                        | #SRS        {ANY_VALUE}
                        | #JFY        {0}
                        | #CR
                        | #LF
                        | #PLD
                        | #PLU
```


Copyright International Organization for Standardization
Provided by IHS under license with ISO
No reproduction or networking permitted without license from IHS
Not for Resale

```
                    | #SP
                    | #SUB
                    | #BPH
                    | #NBH
                    | #SOS
                    | #ST
                    | #LS0
                    | #LS1R
                    | #LS2R
                    | #LS3R
                    | #SS2
                    | #SS3
                    | #ESC      {$DEG-CORE-G0}
                    | #ESC      {$DEG-646-G0}
                    | #ESC      {$DEG-ANY-G1}
                    | #ESC      {$DEG-ANY-G2}
                    | #ESC      {$DEG-ANY-G3}
                    | #ESC      {$DEG-EMPTY-G1}
                    } ...  }
}
```


--`,,`--`,,`,`,,`,`---

Copyright International Organization for Standardization
Provided by IHS under license with ISO
No reproduction or networking permitted without license from IHS

Not for Resale

8 Interchange format

For conformance to this International Standardized Profile, the interchange format class A shall be used when applying ODIF, and the interchange format SDIF shall be used when applying ODL in conjunction with SDIF.

8.1 Interchange format class A

8.1.1 Interchange format

The value of the document profile attribute "interchange format" for this interchange format is 'if-a'. This form of ODIF is defined in CCITT Rec. T.415 | ISO 8613-5.

8.1.2 Document application profile object identifier

The value for the document profile attribute "document application profile" for this interchange format is represented by the following object identifier:

ASN.1 {2 8 4 0 11 0}

8.1.3 Encoding of application comments

The encoding of the attribute "application comments" is defined in this encoding as an octet string as specified in CCITT Rec. T.415 | ISO 8613-5. This document application profile requires that the encoding within that octet string be in accordance with the ASN.1 syntax specified in the following module definition:

```
FOD-DAPSpecification
DEFINITIONS          ::= BEGIN
EXPORTS    Appl-Comm-Encoding;

Appl-Comm-Encoding          ::= SEQUENCE {
      constraint-name       [0] IMPLICIT PrintableString OPTIONAL,
      external-data         [1] IMPLICIT OCTET STRING OPTIONAL }

END
```

8.1.4 Data lengths

The maximum length of data values of the type OCTET STRING, as defined in CCITT Rec. X.208 | ISO/IEC 8824, in data streams which may be encoded in accordance with this DAP is 32 767 octets. If it is required to encode an octet string of greater length than this, constructed type encoding shall be used. That is, data values greater than 32 767 in length shall be split into a sequence of strings shorter than 32 767, each of which is encoded using a primitive type.

8.2 Interchange format SDIF

8.2.1 Interchange format

The document profile attribute "interchange format" does not apply for this interchange format. This form of the interchange format is defined in Annex E of ISO 8613-5. ISO 8613-6 contains additional specifications for this interchange format.

Copyright International Organization for Standardization
Provided by IHS under license with ISO
No reproduction or networking permitted without license from IHS
Not for Resale

8.2.2 Document application profile object identifier

The value for the attribute "document application profile" for this interchange format is represented by the following object identifier:

ASN.1 {1 0 10610 0 11 0}

NOTE - There is no requirement to include a part number arc within the object identifier for the DAP.

8.2.3 Encoding of application comments

The encoding of the attribute "application comments" is defined in a data stream conforming to this International Standardized Profile with this encoding with the following DTD definition:

```
<! -- Public document type definition. Typical invocation :
            <! DOCTYPE fodapc PUBLIC "ISO/IEC 10610-1 : 1993/ / DTD
                                        Application Comments/ / EN"[ ]>
-->
<!ELEMENT   fodapc      - O     (externl?)>
<!ATTLIST   fodapc      consname CDATA      #IMPLIED>
<!ELEMENT   externl     - O     (#PCDATA)>
<!ATTLIST   externl     loc     ENTITY      #CONREF>
```

For example, a typical SUBDOC for representing the "application comments" of a Passage then would look like :

```
<! DOCTYPE fodapc PUBLIC "ISO/IEC 10610-1 : 1993/ / DTD Application Comments/ / EN">
<fodapc consname="1">
```

If the optionality of the attribute "fodapc" is specified in an earlier portion of the DTD, the invocation may be minimized further because the tag is not needed when "application comments" are not included as is the case here.

The content of external data appearing inline is restricted to parsable data. Referenced external data need not be parsable.

Copyright International Organization for Standardization
Provided by IHS under license with ISO
No reproduction or networking permitted without license from IHS
Not for Resale

Annex A

Amendments and technical corrigenda

(This annex forms an integral part of this International Standardized Profile.)

A.1 Amendments

A.1.1 Amendments to the base standard

The amendments applicable to this International Standardized Profile includes text to be included in CCITT Rec. T.411 | ISO 8613-1 as the following annexes:

- Annex E: Use of ISO/IEC 10021 (MOTIS) to interchange documents conforming to CCITT Rec. T.410 series | ISO 8613 - published as First extension to the CCITT Rec. T.410 series (1988), Addendum II | ISO 8613-1 (1989) : Amendment 1;

- Annex F: Document Application Profile proforma and notation - published as CCITT Rec. T.411 - Annex F (1991) | ISO 8613-1 (1989) : Addendum 1;

- Annex G: Conformance testing methodology - published as ISO 8613-1 (1989) : Amendment 2;

- Annex H: Recording of documents conforming to CCITT Rec. T.410 series | ISO 8613 on flexible disk cartridges conforming to ISO 9293 - currently a Draft Amendment to ISO 8613-1 (1989) - Annex H.

This International Standardized Profile does not include the following features of the amendment:

- Addendum on security - published as First extension to the CCITT Rec. T.410 series (1988), Addendum V | ISO 8613 (1989) : Addendum 4;

- Addendum on styles - published as First extension to the CCITT Rec. T.410 series (1988), Addendum IV | ISO 8613 (1989) : Addendum 6;

- Addendum on alternative representation - published as First extension to the CCITT Rec. T.410 series (1988), Addendum III | ISO 8613 (1989) : Addendum 3;

- Addendum on colour - published as Revision of the CCITT Rec. T.410 series contained in COM VIII - R30-E Addendum 2 | ISO 8613 (1989) : Amendment 2;

- Addendum on tiled raster graphics - published as First extension to the CCITT Rec. T.410 series (1988), Addendum I | ISO 8613 (1989) : Addendum 1.

A.1.2 Proposed changes to standards due to defects

This amendment addresses the inclusion of the CCITT Rec. T.410 series (1988) | ISO 8613 (1989) Technical Corrigenda 1, 2 and 3.

Copyright International Organization for Standardization
Provided by IHS under license with ISO
No reproduction or networking permitted without license from IHS
Not for Resale

A.2 Technical corrigenda

A.2.1 Technical corrigenda to this International Standardized Profile

There is no corrigenda specific to this International Standardized Profile.

A.3 Versions of the ODA International Standard

The version of the ODA International Standard defined in clause A.1 is known as "version 1.1". The associated date is 1992-01-01. The version of the ODA International Standard including all features of the amendments, addenda and technical corrigenda mentioned in clause A.1 is known as "version 1.2". The associated date is 1992-07-01.

The entries for ODA version for this DAP is:

- standard or recommendation : "CCITT Rec. T.410 series(1988)|ISO 8613(1989); version 1.1" ;
- publication date "1992-01-01" .

Copyright International Organization for Standardization
Provided by IHS under license with ISO
No reproduction or networking permitted without license from IHS Not for Resale

Annex B

Recommended practices

(This annex does not form an integral part of this International Standardized Profile.)

B.1 Transfer methods for ODA

B.1.1 Conveyance of ODA over CCITT X.400-1984

This describes how ODA body parts are to be encoded for transmission over a CCITT X.400-1984 service.

An ODA body part is encoded as OdaBodyPart in the definition given below:

```
OdaBodyPart ::= SEQUENCE { OdaBodyPartParameters, OdaData }
OdaBodyPartParameters ::= SET {
        document-application-profile
                [0] IMPLICIT OBJECT IDENTIFIER,
        document-architecture-class
                [1] IMPLICIT INTEGER {
                        formatted (0),
                        processable (1),
                        formatted-processable (2) }
 OdaData ::=SEQUENCE OF Interchange-Data-Element
```

NOTE - It is recommended to transfer an ODA document as a single body part with tag 12:

Oda [12] IMPLICIT OCTET STRING

The content of the octet string is encoded as OdaBodyPart, defined above. However, this is out of the scope of this International Standardized Profile.

B.1.2 Conveyance of ODA over FTAM

This describes the FTAM Document Type to be used for minimal storage and transfer capabilities of ODA data streams. It is recognized that enhanced capabilities may at some point be added.

When using FTAM to transfer an ODA file, the FTAM-3, "ISO FTAM Unstructured Binary", document type shall be specified.

However, since files that do not contain ODA data streams can have the same document type, it is left up to the user of application programs that remotely access files using FTAM to know that a given file contains an ODA data stream.

B.1.3 Conveyance of ODA over DTAM

This provides for information concerning the interchange of ODA based documents with DTAM protocols.

DTAM (Document Transfer and Manipulation) is defined in the T.430-Series of CCITT Recommendations and is, like ODA, an integral part of the T.400-Series of CCITT Recommendations named *Open Document Architecture, Transfer and Manipulation.*

Copyright International Organization for Standardization
Provided by IHS under license with ISO
No reproduction or networking permitted without license from IHS Not for Resale

The T.520-Series of CCITT Recommendations contain *Communication Application Profiles (CAP).* CCITT Recommendation T.522 describes the Communication Application Profile BT1 for document bulk transfer. CCITT Recommendation T.522 is applicable for the Open Document Format Profile (FOD) published in this International Standardized Profile.

NOTE - The use of BT1 within the end-to-end oriented Telematic Services Telefax 4 and Teletex is described in CCITT Recommendation T.561, subclause 7.1 and CCITT Recommendation T.562, subclause 7.1.

B.1.4 Conveyance of ODA over flexible disks

The recommended method for interchanging ODA documents between systems by the exchange of magnetically recorded Flexible Disk Cartridges by the use of an annex to CCITT Rec. T.411 | ISO/IEC 8613-1 (to be published), *"Recording of Documents Conforming to ISO 8613 on Flexible Disk Cartridges Conforming to ISO 9293 "*. This annex provides for recording each ODA document as a separate file as defined in ISO 9293."

NOTE - Documents encoded in ODL may be stored such that each SGML ENTITY is recorded in a separate file or in the case of an SDIF encoding, the file may be stored in a single file.

B.2 Interoperability with SGML applications

The recommended method for the exchange of documents between Standard Generalized Markup Language (ISO 8879, SGML) based systems and systems based on this ODA document application profile is by means of exchanging a document representation conforming to these agreements in an encoded form of the SGML language known as the Office Document Language (ODL). ODL is a standardized SGML application for representing documents conforming to the ODA base standard. Such a representation may be converted into the Office Document Interchange Format (ODIF) supported by this document application profile.

Copyright International Organization for Standardization
Provided by IHS under license with ISO
No reproduction or networking permitted without license from IHS
Not for Resale

Annex C

Bibliography

(This annex does not form an integral part of this International Standardized Profile.)

- CCITT Recommendation T.50 (1992), *International Reference Alphabet;*

- CCITT Recommendation T.51 (1992), *Latin based coded character sets for telematic services;*

- CCITT Recommendation T.52[1)] , *Non-Latin coded character sets for telematic services;*

- CCITT Recommendation T.502 (1991), *Document Application Profile PM-11 for the Interchange of Character Content Documents in Processable and Formatted Forms;*

- CCITT Recommendation T.505 (1991), *Document Application Profile PM-26 for the Interchange of Mixed Content Documents in Processable and Formatted Forms;*

- ISO 8571 : 1988, *Information processing systems - Open Systems Interconnection - File Transfer, Access and Management;*

- ISO/IEC 9070 : 1991, *Information technology - SGML support facilities - Registration procedures for public text owner identifiers;*

- ISO/IEC TR 9573 : 1988, *Information processing - SGML support facilities - Techniques for using SGML;*

- ISO/IEC 10021 : 1990, *Information technology - Text Communication - Message-Oriented Text Interchange Systems (MOTIS).*

1) Presently at the stage of draft.

Copyright International Organization for Standardization
Provided by IHS under license with ISO
No reproduction or networking permitted without license from IHS
Not for Resale

UDC 681.3:621.39:651.5/.7

Descriptors: data processing, text processing, information interchange, documentation, documents, document architecture, logical structure, layout, formats, profiles.

Price based on 64 pages

Copyright International Organization for Standardization
Provided by IHS under license with ISO
No reproduction or networking permitted without license from IHS

Not for Resale