DRAFT INTERNATIONAL STANDARD ISO/IEC 13170

Attributed to ISO/IEC JTC 1 by the Central Secretariat (see page iii)

Voting begins on
2009-03-27

Voting terminates on
2009-08-27

INTERNATIONAL ORGANIZATION FOR STANDARDIZATION • МЕЖДУНАРОДНАЯ ОРГАНИЗАЦИЯ ПО СТАНДАРТИЗАЦИИ • ORGANISATION INTERNATIONALE DE NORMALISATION
INTERNATIONAL ELECTROTECHNICAL COMMISSION • МЕЖДУНАРОДНАЯ ЭЛЕКТРОТЕХНИЧЕСКАЯ КОММИСИЯ • COMMISSION ÉLECTROTECHNIQUE INTERNATIONALE

FAST-TRACK PROCEDURE

Information technology — 120 mm (8,54 Gbytes per side) and 80 mm (2,66 Gbytes per side) DVD Re-recordable disk for Dual Layer (DVD-RW for DL)

Technologies de l'information — Disque DVD réenregistrable de 120 mm (8,54 Go par face) et 80 mm (2,66 Go par face) pour double couche (DVD-RW pour DL)

ICS 35.220.30

In accordance with the provisions of Council Resolution 21/1986 this DIS is circulated in the English language only.

Conformément aux dispositions de la Résolution du Conseil 21/1986, ce DIS est distribué en version anglaise seulement.

THIS DOCUMENT IS A DRAFT CIRCULATED FOR COMMENT AND APPROVAL. IT IS THEREFORE SUBJECT TO CHANGE AND MAY NOT BE REFERRED TO AS AN INTERNATIONAL STANDARD UNTIL PUBLISHED AS SUCH.

IN ADDITION TO THEIR EVALUATION AS BEING ACCEPTABLE FOR INDUSTRIAL, TECHNOLOGICAL, COMMERCIAL AND USER PURPOSES, DRAFT INTERNATIONAL STANDARDS MAY ON OCCASION HAVE TO BE CONSIDERED IN THE LIGHT OF THEIR POTENTIAL TO BECOME STANDARDS TO WHICH REFERENCE MAY BE MADE IN NATIONAL REGULATIONS.

RECIPIENTS OF THIS DRAFT ARE INVITED TO SUBMIT, WITH THEIR COMMENTS, NOTIFICATION OF ANY RELEVANT PATENT RIGHTS OF WHICH THEY ARE AWARE AND TO PROVIDE SUPPORTING DOCUMENTATION.

© International Organization for Standardization, 2009
© International Electrotechnical Commission, 2009

Copyright International Organization for Standardization
Provided by IHS under license with ISO
No reproduction or networking permitted without license from IHS
Not for Resale

PDF disclaimer

This PDF file may contain embedded typefaces. In accordance with Adobe's licensing policy, this file may be printed or viewed but shall not be edited unless the typefaces which are embedded are licensed to and installed on the computer performing the editing. In downloading this file, parties accept therein the responsibility of not infringing Adobe's licensing policy. The ISO Central Secretariat accepts no liability in this area.

Adobe is a trademark of Adobe Systems Incorporated.

Details of the software products used to create this PDF file can be found in the General Info relative to the file; the PDF-creation parameters were optimized for printing. Every care has been taken to ensure that the file is suitable for use by ISO member bodies. In the unlikely event that a problem relating to it is found, please inform the Central Secretariat at the address given below.

Copyright notice

This ISO document is a Draft International Standard and is copyright-protected by ISO. Except as permitted under the applicable laws of the user's country, neither this ISO draft nor any extract from it may be reproduced, stored in a retrieval system or transmitted in any form or by any means, electronic, photocopying, recording or otherwise, without prior written permission being secured.

Requests for permission to reproduce should be addressed to either ISO at the address below or ISO's member body in the country of the requester.

ISO copyright office
Case postale 56 • CH-1211 Geneva 20
Tel. + 41 22 749 01 11
Fax + 41 22 749 09 47
E-mail copyright@iso.org
Web www.iso.org

Reproduction may be subject to royalty payments or a licensing agreement.

Violators may be prosecuted.

--`,,```,,,,````-`-`,,`,,`,`,,`---

Copyright International Organization for Standardization
Provided by IHS under license with ISO
No reproduction or networking permitted without license from IHS

© ISO/IEC 2009 — All rights reserved

Not for Resale

NOTE FROM ITTF

This draft International Standard is submitted for JTC 1 national body vote under the Fast-Track Procedure.

In accordance with Resolution 30 of the JTC 1 Berlin Plenary 1993, the proposer of this document recommends assignment of ISO/IEC 13170 to JTC 1/SC 23.

"FAST-TRACK" PROCEDURE

1 Any P-member and any Category A liaison organization of ISO/IEC JTC 1 may propose that an existing standard from any source be submitted directly for vote as a DIS. The criteria for proposing an existing standard for the fast-track procedure are a matter for each proposer to decide.

2 The proposal shall be received by the ITTF which will take the following actions.

2.1 To settle the copyright and/or trade mark situation with the proposer, so that the proposed text can be freely copied and distributed within JTC 1 without restriction.

2.2 To assess in consultation with the JTC 1 secretariat which SC is competent for the subject covered by the proposed standard and to ascertain that there is no evident contradiction with other International Standards.

2.3 To distribute the text of the proposed standard as a DIS. In case of particularly bulky documents the ITTF may demand the necessary number of copies from the proposer.

3 The period for combined DIS voting shall be five months. In order to be accepted the DIS must be supported by 75 % of the votes cast (abstention is not counted as a vote) and by two-thirds of the P-members voting of JTC 1.

4 At the end of the voting period, the comments received, whether editorial only or technical, will be dealt with by a working group appointed by the secretariat of the relevant SC.

5 If, after the deliberations of this WG, the requirements of 3 above are met, the amended text shall be sent to the ITTF by the secretariat of the relevant SC for publication as an International Standard.

If it is impossible to agree to a text meeting the above requirements, the proposal has failed and the procedure is terminated.

In either case the WG shall prepare a full report which will be circulated by the ITTF.

6 If the proposed standard is accepted and published, its maintenance will be handled by JTC 1.

© ISO/IEC 2000 - All rights reserved

Copyright International Organization for Standardization
Provided by IHS under license with ISO
No reproduction or networking permitted without license from IHS
Not for Resale

Copyright International Organization for Standardization
Provided by IHS under license with ISO
No reproduction or networking permitted without license from IHS
Not for Resale

ecma INTERNATIONAL

Standard ECMA-384

1st Edition / December 2008

120 mm (8,54 Gbytes per side) and 80 mm (2,66 Gbytes per side) DVD Re-recordable Disk for Dual Layer (DVD-RW for DL)

Copyright International Organization for Standardization
Provided by IHS under license with ISO
No reproduction or networking permitted without license from IHS
Not for Resale

Rue du Rhône 11 CH-1204 Geneva T: +41 22 849 6000 F: +41 22 849 6001

Copyright International Organization for Standardization
Provided by IHS under license with ISO
No reproduction or networking permitted without license from IHS
Not for Resale

Standard
ECMA-384
1st Edition / December 2008

120 mm (8,54 Gbytes per side) and 80 mm (2,66 Gbytes per side) DVD Re-recordable Disk for Dual Layer (DVD-RW for DL)

DRAFT 2009

Copyright International Organization for Standardization
Provided by IHS under license with ISO
No reproduction or networking permitted without license from IHS
Not for Resale

--`,,```,,,,````-`-`,,`,,`,`,,`---

Copyright International Organization for Standardization
Provided by IHS under license with ISO
No reproduction or networking permitted without license from IHS

Not for Resale

Introduction

Ecma Technical Committee TC31 was established in 1984 for the standardization of Optical Disks and Optical Disk Cartridges (ODC). Since its establishment, the Committee has made major contributions to ISO/IEC JTC 1/SC 23 toward the development of International Standards for optical disks. Numerous standards have been developed by TC31 and published by Ecma, almost all of which have also been adopted by ISO/IEC under the fast-track procedure as International Standards. The following Ecma Standards for DVD 120 mm and 80 mm have been published by Ecma and adopted by ISO/IEC JTC 1. Those standards are based on original specifications from The DVD Forum.

ECMA-267 (2001) *ISO/IEC 16448*	120 mm DVD-Read-Only Disk, 3rd edition
ECMA-268 (2001) *ISO/IEC 16449*	80 mm DVD-Read-Only Disk, 3rd edition
ECMA-272 (1999) *ISO/IEC 16824*	120 mm DVD Rewritable Disk (DVD-RAM), 2nd edition
ECMA-273 (1998) *ISO/IEC* 16825	Case for 120 mm DVD-RAM Disks, 1st edition
ECMA-279 (1998) *ISO/IEC 20563*	80 mm (1,23 Gbytes per side) and 120 mm (3,95 Gbytes per side) DVD-Recordable Disk (DVD-R), 1st edition
ECMA-330 (2005) *ISO/IEC 17592*	120 mm (4,7 Gbytes per side) and 80 mm (1,46 Gbytes per side) DVD Rewritable Disk (DVD-RAM) 3rd edition
ECMA-331 (2004) *ISO/IEC 17594*	Case for 120 mm and 80 mm DVD-RAM Disks, 2nd edition
ECMA-338 (2002) *ISO/IEC 17342*	80 mm (1,46 Gbytes per side) and 120 mm (4,70 Gbytes per side) DVD Re-recordable Disk (DVD-RW)
ECMA-359 (2004) *ISO/IEC 23912*	80 mm (1,46 Gbytes per side) and 120 mm (4,70 Gbytes per side) DVD Recordable Disk (DVD-R)

In April 2007 nine members proposed to TC31 to develop a standard for 120 mm and 80 mm dual layer DVD Re-recordable optical disks using Phase Change recording technology and TC31 adopted this project that has resulted in this Ecma Standard.

This Ecma Standard specifies two Types of dual layer Re-recordable optical disks, one (Type 1S) making use of recording on only a single side of the disk and yielding a nominal capacity of 8,54 Gbytes for a 120 mm disk and 2,66 Gbytes for an 80 mm disk, the other (Type 2S) making use of recording on both sides of the disk and yielding a nominal capacity of 17,08 Gbytes for a 120 mm disk and 5,32 Gbytes for an 80 mm disk.

This Ecma Standard has been adopted by the General Assembly of December 2008.

DRAFT 2009

--`,,```,,,,````-`-`,,`,,`,`,,`---

Copyright International Organization for Standardization
Provided by IHS under license with ISO
No reproduction or networking permitted without license from IHS
Not for Resale

--`,,```,,,,````-`-`,,`,,`,`,,`---

Copyright International Organization for Standardization
Provided by IHS under license with ISO
No reproduction or networking permitted without license from IHS
Not for Resale

Table of contents

Section 1 — General 1

1 Scope 1

2 Conformance 1

2.1 Optical Disk 1
2.2 Generating system 1
2.3 Receiving system 1

3 Reference 1

4 Definitions 2

4.1 Basic recording speed 2
4.2 Block SYNC Guard Area 2
4.3 Channel bit 2
4.4 Clamping Zone 2
4.5 Class 2
4.6 Data Zone 2
4.7 Data Recordable Zone 2
4.8 Digital Sum Value (DSV) 2
4.9 Disk Reference Plane 2
4.10 Disk Testing Area (DTA) 2
4.11 ECC Block address 3
4.12 Error Correction Code (ECC) 3
4.13 Error Detection Code (EDC) 3
4.14 Finalization 3
4.15 Groove 3
4.16 Information Zone 3
4.17 Initial Information Zone 3
4.18 Land 3
4.19 Land Pre-Pit (LPP) 3
4.20 Layer jump address 3
4.21 Lead-in Zone 3
4.22 Lead-out Zone 3
4.23 Middle Zone 4
4.24 Recording Management Area (RMA) 4
4.25 Recording Management Data (RMD) 4

DRAFT 2009

--`,,```,,,,````-`-`,,`,,`,`,,`---

Copyright International Organization for Standardization
Provided by IHS under license with ISO
No reproduction or networking permitted without license from IHS
Not for Resale

4.26 Restricted Overwrite 4
4.27 R-Information Zone 4
4.28 RZone 4
4.29 Sector 4
4.30 Substrate 4
4.31 Track 4
4.32 Track pitch 4
4.33 Zone 4

5 Conventions and notations 5

5.1 Representation of numbers 5
5.2 Names 5

6 Acronyms 5

7 General description of a disk 6

8 General requirement 7

8.1 Environments 7
8.1.1 Test environment 7
8.1.2 Operating environment 7
8.1.3 Storage environment 7
8.1.4 Transportation 7
8.2 Safety requirements 8
8.3 Flammability 8

9 Reference measurement devices 8

9.1 Pick-Up Head (PUH) 8
9.1.1 PUH for measuring recorded disks 8
9.1.2 PUH for measuring unrecorded disks 10
9.2 Measurement conditions 11
9.2.1 Recorded and unrecorded disk 11
9.2.2 Recorded disk 11
9.2.3 Unrecorded disk 11
9.3 Normalized servo transfer function 11
9.4 Reference servo for axial tracking 12
9.4.1 Recorded disk 12
9.4.2 Unrecorded disk 13
9.5 Reference servo for radial tracking 14
9.5.1 Recorded disk 14
9.5.2 Unrecorded disk 15

Section 2 — Dimensional, mechanical and physical characteristics of the disk 16

DRAFT 2009

Copyright International Organization for Standardization
Provided by IHS under license with ISO
No reproduction or networking permitted without license from IHS
Not for Resale

10 Dimensional characteristics 16

10.1 Overall dimensions 17
10.2 First transition area 18
10.3 Second transition area 18
10.4 Clamping Zone 18
10.5 Third transition area 18
10.6 R-Information Zone 18
10.6.1 Sub-divisions of the R-Information Zone 19
10.7 Information Zone 19
10.7.1 Sub-divisions of the Information zone 19
10.8 Track geometry 20
10.8.1 Track Path 20
10.9 Channel bit length 20
10.10 Rim area 20
10.11 Remark on tolerances 21
10.12 Label 21

11 Mechanical parameters 21

11.1 Mass 21
11.2 Moment of inertia 21
11.3 Dynamic imbalance 21
11.4 Sense of rotation 22
11.5 Runout 22
11.5.1 Axial runout 22
11.5.2 Radial runout 22

12 Optical parameters 22

12.1 Recorded and unrecorded disk parameters 22
12.1.1 Index of refraction 22
12.1.2 Thickness of the transparent substrate 22
12.1.3 Angular deviation 23
12.1.4 Birefringence of the transparent substrate 23
12.2 Recorded disk reflectivity 24
12.3 Unrecorded disk parameters 24
12.3.1 Polarity of reflectivity modulation 24
12.3.2 Recording power sensitivity variation 24

Section 3 — Operational signals 25

13 Operational signals for recorded disk 25

13.1 Measurement conditions 25
13.2 Read conditions 25

DRAFT 2009

Copyright International Organization for Standardization
Provided by IHS under license with ISO
No reproduction or networking permitted without license from IHS
Not for Resale

13.3 Recorded disk high frequency (HF) signals 25
13.3.1 Modulated amplitude 25
13.3.2 Signal asymmetry 25
13.3.3 Cross-track signal 26
13.4 Quality of signals 26
13.4.1 Jitter 26
13.4.2 Random errors 26
13.4.3 Defects 26
13.5 Servo signals 26
13.5.1 Differential phase tracking error signal 26
13.5.2 Tangential push-pull signal 27
13.6 Groove wobble signal 28

14 Operational signals for the unrecorded disk 29

14.1 Measurement conditions 29
14.2 Recording conditions 29
14.3 Write strategy for media testing 29
14.3.1 Write strategy for Layer 0 29
14.3.2 Write strategy for Layer 1 30
14.3.3 Definition of the write pulse 32
14.4 Servo signals 33
14.4.1 Radial push-pull tracking error signal 33
14.4.2 Defects 34
14.5 Addressing signals 34
14.5.1 Land Pre-Pit signal 34
14.5.2 Groove wobble signal 36
14.5.3 Relation in phase between wobble and Land Pre-Pit 36

15 Operational signals for Embossed Zone 37

15.1 Operational signals from the Control data blocks 37
15.1.1 Measurement conditions 37
15.1.2 Read conditions 37
15.1.3 High frequency (HF) signals 37
15.1.4 Quality of signals 37
15.1.5 Servo signals 37
15.1.6 Groove wobble signal 38
15.2 Operational signals from the Servo Blocks 38
15.2.1 Measurement conditions 38
15.2.2 Read conditions 38
15.2.3 Servo signals 38
15.2.4 Addressing signals 39

Section 4 — Data format 40

16 General 40

DRAFT 2009

Copyright International Organization for Standardization
Provided by IHS under license with ISO
No reproduction or networking permitted without license from IHS
Not for Resale

17 Data Frames 40
17.1 Identification Data (ID) 40
17.2 ID Error Detection Code 41
17.3 RSV 42
17.4 Error Detection Code 42
18 Scrambled Frames 42
19 ECC Block configuration 43
20 Recording Frames 44
21 Modulation 45
22 Physical Sectors 46
23 Suppress control of the d.c. component 47
24 Linking scheme 48
24.1 Structure of linking 48
24.2 2K-Link and 32K-Link 48
24.3 Lossless-Link 49
Section 5 — Format of the Information Zone 51
25 General description of the Information Zone 51
25.1 Layout of the Information Zone 51
25.2 Physical Sector numbering 52
26 Lead-in Zone, Middle Zone and Lead-out Zone 53
26.1 Lead-in Zone 53
26.1.1 Initial Zone 53
26.1.2 Buffer Zone 0 53
26.1.3 RW-Physical Format Information Zone 53
26.1.4 Reference Code Zone 56
26.1.5 Buffer Zone 1 56
26.1.6 Control Data Zone 56
26.1.7 Extra Border Zone 70
26.2 Middle Zone 70
26.3 Lead-out Zone 71
Section 6 — Format of the Unrecorded Zone 72
27 General description of the Unrecorded Zone 72

DRAFT 2009
Copyright International Organization for Standardization
Provided by IHS under license with ISO
No reproduction or networking permitted without license from IHS
Not for Resale

27.1 Layout of the Unrecorded Zone 72
27.2 ECC Block address 73
27.3 ECC Block numbering 73

28 Pre-pit Data format 74

28.1 General description 74
28.2 Pre-pit block structure 76
28.3 Pre-pit data block configuration 78
28.3.1 Relative address 79
28.3.2 ECC Block address data configuration 79
28.3.3 Parity A and Parity B 79
28.3.4 Field ID0 80
28.3.5 Field ID1 81
28.3.6 Field ID2 83
28.3.7 Field ID3 and Field ID4 83
28.3.8 Field ID5 85

29 Data structure of R-Information Zone and ODTA 86

29.1 Layout of Disk Testing Area and Recording Management Area 86
29.2 Structure of the Disk Testing Area 86
29.3 Data configuration of the Recording Management Area (RMA) 88
29.3.1 Sector format of the Recording Management Area 88
29.3.2 Logical data structure of RMA 90
29.3.3 Recording Management Data (Format2 RMD and Format3 RMD) 90

Annex A (normative) Measurement of the angular deviation α 109

Annex B (normative) Measurement of birefringence 111

Annex C (normative) Measurement of the differential phase tracking error 113

Annex D (normative) Measurement of light reflectance 117

Annex E (normative) Tapered cone for disk clamping 119

Annex F (normative) Measurement of jitter 121

Annex G (normative) 8-to-16 Modulation with RLL (2,10) requirements 125

Annex H (normative) Optimum Power Control 135

Annex I (normative) Measurement of the groove wobble amplitude 139

Annex J (normative) Measurement methods for the operational signals for an unrecorded disk 141

DRAFT 2009

Copyright International Organization for Standardization
Provided by IHS under license with ISO
No reproduction or networking permitted without license from IHS
Not for Resale

Annex K (normative) NBCA Code 143

Annex L (normative) Format operation 149

Annex M (normative) Measurement method of the Land Pre-Pit signal 153

Annex N (normative) Construction of Information Zone 155

Annex O (normative) Recording order 157

Annex P (normative) Clearance in the number of sectors 159

Annex Q (normative) Layer jump recording 161

Annex R (Informative) Measurement method of the Space layer thickness in a disk 163

Annex S (informative) Transportation 165

DRAFT 2009

Copyright International Organization for Standardization
Provided by IHS under license with ISO
No reproduction or networking permitted without license from IHS
Not for Resale

DRAFT 2009

--`,,```,,,,````-`-`,,`,,`,`,,`---

Copyright International Organization for Standardization
Provided by IHS under license with ISO
No reproduction or networking permitted without license from IHS

Not for Resale

Section 1 — General

1 Scope

This Ecma Standard specifies the mechanical, physical and optical characteristics of a 120 mm and an 80 mm dual layer DVD Re-recordable disk to enable the interchange of such disks. It specifies the quality of the embossed, unrecorded and the recorded signals, the format of the data, the format of the information zone, the format of the unrecorded zone, and the recording method, thereby allowing for information interchange by means of such disks. This disk is identified as a DVD Re-recordable disk for Dual Layer (DVD-RW for DL).

This Ecma Standard specifies:

- 120 mm and 80 mm nominal diameter disks that may be either single or double sided;
- the conditions for conformance;
- the environments in which the disk is to be operated and stored;
- the mechanical and physical characteristics of the disk, so as to provide mechanical interchange between data processing systems;
- the format of the embossed information on an unrecorded disk, including the physical disposition of the tracks and sectors, the error correcting codes and the coding method used;
- the format of the data and the recorded information on the disk, including the physical disposition of the tracks and sectors, the error correcting codes and the coding method used;
- the characteristics of the signals from embossed and unrecorded areas on the disk, enabling data processing systems to read the embossed information and to write to the disks;
- the characteristics of the signals recorded on the disk, enabling data processing systems to read the data from the disk.

This Ecma Standard provides for interchange of disks between disk drives. Together with a standard for volume and file structure, it provides for full data interchange between data processing systems.

2 Conformance

2.1 Optical Disk

A claim of conformance shall specify the type of the disk, i.e. its size and whether it is single-sided or double sided. An optical disk shall be in conformance with this Ecma Standard if it meets the mandatory requirements specified for this type.

2.2 Generating system

A generating system shall be in conformance with this Ecma Standard if the optical disk it generates is in accordance with 2.1.

2.3 Receiving system

A receiving system shall be in conformance with this Ecma Standard if it is able to handle an optical disk according to 2.1.

3 Reference

The following standards contain provisions which, through reference in this text, constitute provisions of this Ecma Standard. At the time of publication, the edition indicated was valid. All standards are subjected to revision, and parties to agreements based on this Ecma Standard are

Copyright International Organization for Standardization
Provided by IHS under license with ISO
No reproduction or networking permitted without license from IHS
Not for Resale

DRAFT 2.0.9

encouraged to investigate the possibility of applying the most recent edition of the standards listed below.

ECMA-94	Latin Alphabet No.1
ECMA-287	Safety of electronic equipment

4 Definitions

For the purpose of this Ecma Standard the following definitions apply.

4.1 Basic recording speed

A recording speed at which a disk is under an obligation to be recorded. A Basic recording speed is mandatory recording speed for each Class.

4.2 Block SYNC Guard Area

The recorded area in the first ECC block of the contiguous area of which recording is started from the unrecorded area by using 32K-Link.

4.3 Channel bit

The elements by which, after modulation, the binary values ZERO and ONE are represented on the disk by marks.

4.4 Clamping Zone

The annular part of the disk within which a clamping force is applied by a clamping device.

4.5 Class

Integer number, including 0, that indicates Basic recording speed supported by a disk.

A group of recording speeds in a disk must contain at least one Basic recording speed which is mandatory for recording device and disk.

4.6 Data Zone

The zone between the Lead-in Zone and the Middle Zone on Layer 0 and the zone between the Middle Zone and the Lead-out Zone on Layer 1, in which user data is recorded.

4.7 Data Recordable Zone

The zone that is available to record user data.

4.8 Digital Sum Value (DSV)

The arithmetic sum obtained from a bit stream by allocating the decimal value 1 to bits set to ONE and the decimal value –1 to bits set to Zero.

4.9 Disk Reference Plane

A plane defined by the perfectly flat annular surface of an ideal spindle onto which the Clamping Zone of the disk is clamped, and which is normal to the axis of rotation.

4.10 Disk Testing Area (DTA)

The area used for Optimum Power Control. There are two kinds of the Disk Testing Area on a disk.

Inner Disk Testing Area (IDTA) is located in the R-Information Zone and situated adjacent to the inside of the Recording Management Area. Outer Disk Testing Area (ODTA) is fixed and situated adjacent to the outside of the fixed Middle Zone.

The optional IDTA can be located on Layer 1 facing the special allocation in the Initial zone on Layer 0 as an option for devices, when NBCA is not applied on a disk.

DRAFT 2009

Copyright International Organization for Standardization
Provided by IHS under license with ISO
No reproduction or networking permitted without license from IHS
Not for Resale

4.11 ECC Block address

The absolute physical address used to define the recording position on the land of each area. This address is pre-recorded as Land Pre-Pits and equal to the bit-inverted numbers from b_{23} to b_4 of the Physical sector number recorded in the groove. Serially decremented numbers are assigned to blocks from the inner radius to the outer radius on Layer 0 and from the outer radius to the inner radius on Layer 1. The first ECC Block address in the Data Recordable Zone on Layer 0 is (FFCFFF). The bit-inverted number is calculated so that the bit value of one becomes that of zero and vice versa.

NOTE
The "ECC Block address" definition is specific to this Standard.

4.12 Error Correction Code (ECC)

A mathematical computation yielding check bytes used for the detection and correction of errors in data.

4.13 Error Detection Code (EDC)

A code designed to detect certain kinds of errors in data.

Error Detection Code consists of data and the error detection parity.

4.14 Finalization

The action for changing into the state where the Lead-in, the Lead-out and the Middle Zones are recorded.

After Finalization, the information Zone from the Lead-in Zone to the Middle Zone on Layer 0 and from the Middle Zone to the Lead-out Zone on Layer 1 shall be recorded without any unrecorded areas.

4.15 Groove

The wobbled guidance track.

4.16 Information Zone

The zone comprising the Lead-in Zone, the Data Zone, the Middle Zone and the Lead-out Zone.

4.17 Initial Information Zone

The zone comprising the Lead-in Zone, the Data Recordable Zone, the fixed Middle Zone and the Lead-out Zone.

4.18 Land

The area between the grooves.

4.19 Land Pre-Pit (LPP)

Pits embossed on the land during the manufacture of the disk substrate, which contain address information.

4.20 Layer jump address

The address on Layer 0 that causes layer jump to Layer 1.

The end sector number of the Data area on Layer 0 and the address that is located immediately before the shifted Middle area are also Layer jump addresses.

4.21 Lead-in Zone

The zone comprising Physical sectors adjacent to the inside of the Data Zone on Layer 0.

4.22 Lead-out Zone

The zone comprising Physical sectors adjacent to the inside of the Data Zone on Layer 1.

DRAFT 2000

Copyright International Organization for Standardization
Provided by IHS under license with ISO
No reproduction or networking permitted without license from IHS
Not for Resale

When the recording of user data is finished on Layer 0, the Lead-out Zone is located adjacent to the inside of the Middle Zone on Layer 1.

4.23 Middle Zone

The zone comprising physical sectors adjacent to the outside of the Data Zone on Layer 0 and Layer 1 respectively.

The fixed Middle Zone is located outside of Data Recordable Zone of a disk.

The shifted Middle Zone can be added at the inner radius than the fixed Middle Zone as an option for devices, depending on the size of the Data Zone and located outside of the Data Zone.

4.24 Recording Management Area (RMA)

The area containing the Recording Management Data (RMD), situated adjacent to the inside of the Lead-in Zone on Layer 0 and the Lead-out Zone on Layer 1 respectively.

4.25 Recording Management Data (RMD)

The information about the recording on the disk, including information for recordings.

Two kinds of RMD format are specified. Format2 RMD contains the information of Pionter to indicate the valid Format3 RMD Set in the RMA segment. Format3 RMD contains the information related to Restricted Overwrite recording mode including Layer jump recording mode.

4.26 Restricted Overwrite

A recording mode in which recording the ECC block(s) onto any portion of recorded ECC block(s) or concatenating the ECC block(s) to the most outer recorded ECC block(s) with the Linking scheme.

4.27 R-Information Zone

The zone comprising the Inner Disk Testing Area (IDTA) and the Recording Management Area (RMA).

4.28 RZone

ECC blocks that are continuous on a layer and assigned to user data on Layer 0 and/or Layer 1 during recording.

4.29 Sector

The smallest addressable part of a track in the information zone of a disk that can be accessed independently of other addressable parts.

4.30 Substrate

A transparent layer of the disk, provided for mechanical support of the recording or recorded layer, through which the optical beam accesses the recordable / recorded layer.

4.31 Track

A 360° turn of a continuous spiral of recorded marks or groove.

4.32 Track pitch

The distance between adjacent average physical track centrelines of the wobbled grooves for the unrecorded disk, or between adjacent physical track centrelines of the successive recorded marks for the recorded disk, measured in the radial direction.

4.33 Zone

An annular area of the disk.

DRAFTING

Copyright International Organization for Standardization
Provided by IHS under license with ISO
No reproduction or networking permitted without license from IHS
Not for Resale

5 Conventions and notations

5.1 Representation of numbers

A measured value is rounded off to the least significant digit of the corresponding specified value. For instance, it implies that a specified value of 1,26 with a positive tolerance of + 0,01 and a negative tolerance of - 0,02 allows a range of measured values from 1,235 to 1,275.

Numbers in decimal notations are represented by the digits 0 to 9.

Numbers in hexadecimal notation are represented by the hexadecimal digits 0 to 9 and A to F in parentheses.

The setting of bits is denoted by ZERO and ONE.

Numbers in binary notations and bit patterns are represented by strings of digits 0 and 1, with the most significant bit shown to the left.

Negative values of numbers in binary notation are given as Two's complement.

In each field the data is recorded so that the most significant byte (MSB), identified as Byte 0, is recorded first and the least significant byte (LSB) last. In a field of 8*n* bits, bit $b_{(8n-1)}$ shall be the most significant bit (msb) and bit b_0 the least significant bit (lsb). Bit $b_{(8n-1)}$ is recorded first.

5.2 Names

The names of entities, e.g. specific tracks, fields, areas, zones, etc. are given a capital initial.

6 Acronyms

AP	Amplitude of the land Pre-Pit signal (without wobble amplitude)
AR	Aperture Ratio (of the Land Pre-Pit after recording)
BP	Byte Position
BPF	Band Pass Filter
CLV	Constant Linear Velocity
CNR	Carrier to Noise Ratio
DCC	DC Component suppress control
DSV	Digital Sum Value
ECC	Error Correction Code
EDC	Error Detection Code
HF	High Frequency
ID	Identification Data
LA	Lead-out Attribute
IDTA	Inner Disk Testing Area
IED	ID Error Detection (code)
LPF	Low-Pass Filter
LPP	Land Pre-Pit
LSB	Least Significant Byte
lsb	least significant bit
MSB	Most Significant Byte
msb	most significant bit
NBCA	Narrow Burst Cutting Area
NRZI	Non Return to Zero Inverted
ODTA	Outer Disk Testing Area
OPC	Optimum Power Control
OTP	Opposite Track Path
PBS	Polarizing Beam Splitter
PI	Parity (of the) Inner (code)
PLL	Phase Locked Loop
PO	Parity (of the) Outer (code)
PSN	Physical Sector Number
PTP	Parallel Track Path

Copyright International Organization for Standardization
Provided by IHS under license with ISO
No reproduction or networking permitted without license from IHS
Not for Resale

PUH	Pick-Up Head
RBP	Relative Byte Position
RBW	Resolution Bandwidth
RESYNC	Re-Synchronization
RMA	Recording Management Area
RMD	Recording Management Data
RS	Reed-Solomon (code)
SYNC	Synchronization

7 General description of a disk

The 120 mm and 80 mm optical disks that are the subject of this Ecma Standard consist of two substrates bonded together by an adhesive layer, so that the recording layers are on the inside. The centring of the disk is performed on the edge of the centre hole of the assembled disk on the side currently read. Clamping is performed in the Clamping Zone. The DVD Re-recordable Disk for Dual Layer (DVD-RW for DL) may be either double-sided or single-sided with respect to the number of recording layers. A double-sided disk has the recording layers on the inside of each substrate. A single-sided disk has one substrate with the recording layers on the inside and a dummy substrate without a recording layer. A recorded disk provides for the data to be read many times by an optical beam of a drive. Figure 1 shows schematically a double-sided (Type 2S) and a single-sided (Type 1S) disk.

Type 1S consists of a substrate, two recording layers with a space layer between them, an adhesive layer, and a dummy substrate. Both recording layers can be accessed from one side only. The nominal capacity is 8,54 Gbytes for a 120 mm disk and 2,66 Gbytes for an 80 mm disk.

Type 2S consists of two substrates, each having two recording layers with a space layer between them, and an adhesive layer. From one side of the disk only one pair of recording layers can be accessed. The nominal total capacity is 17,08 Gbytes for a 120 mm disk and 5,32 Gbytes for an 80 mm disk.

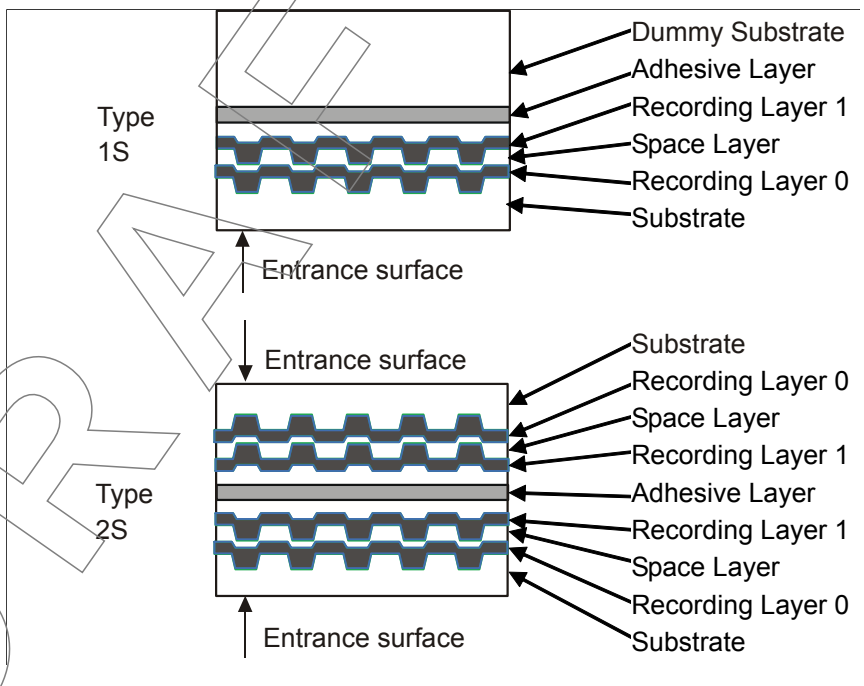

Figure 1 — Disk outline

DRAFT 09

Copyright International Organization for Standardization
Provided by IHS under license with ISO
No reproduction or networking permitted without license from IHS
Not for Resale

8 General requirement

8.1 Environments

8.1.1 Test environment

The test environment is the environment where the air immediately surrounding the disk has the following properties.

	a) For dimensional measurements	b) For other measurements
temperature :	23 °C ± 2 °C	15 °C to 35 °C
relative humidity :	45 % to 55 %	45 % to 75 %
atmospheric pressure :	86 kPa to 106 kPa	86 kPa to 106 kPa

Unless otherwise stated, all tests and measurements shall be made in this test environment.

8.1.2 Operating environment

This Ecma Standard requires that an optical disk which meets all mandatory requirements of this Ecma Standard in the specified test environment provides data interchange over the specified ranges of environmental parameters in the operating environment.

Disks used for data interchange shall be operated under the following conditions, when mounted in the drive supplied with voltage and measured on the outside surface of the disk.

8.1.2.1 Environmental conditions during reading

The disk exposed to storage conditions shall be conditioned in the operating environment for at least two hours before operating.

temperature :	-25 °C to 70 °C
relative humidity :	3 % to 95 %
absolute humidity :	0,5 g/m^3 to 60 g/m^3
temperature gradient :	15 °C/h max.
relative humidity gradient :	10 %/h max.

There shall be no condensation of moisture on the disk.

8.1.2.2 Environmental conditions during recording

The disk exposed to storage conditions shall be conditioned in the recording environment for at least two hours before operating.

temperature :	-5 °C to 55 °C
relative humidity :	3 % to 95 %
absolute humidity :	0,5 g/m^3 to 30 g/m^3

There shall be no condensation of moisture on the disk.

8.1.3 Storage environment

The storage environment is the environment where the air immediately surrounding the optical disk shall have the following properties.

temperature :	-20 °C to 50 °C
relative humidity :	5 % to 90 %
absolute humidity :	1 g/m^3 to 30 g/m^3
atmospheric pressure :	75 kPa to 106 kPa
temperature variation :	15 °C /h max.
relative humidity variation :	10 %/h max.

8.1.4 Transportation

This Ecma Standard does not specify requirements for transportation; guidance is given in Annex U.

Copyright International Organization for Standardization
Provided by IHS under license with ISO
No reproduction or networking permitted without license from IHS
Not for Resale

8.2 Safety requirements

The disk shall satisfy the requirements of Standard ECMA-287, when used in the intended manner or in any foreseeable use in an information system.

8.3 Flammability

The disk shall be made from materials that comply with the flammability class for HB materials, or better, as specified in Standard ECMA-287.

9 Reference measurement devices

The reference measurement devices for recorded disks and for unrecorded disks shall be used for the measurements of optical parameters for conformance with this Ecma Standard. The critical components of these devices have specific properties defined in this clause.

9.1 Pick-Up Head (PUH)

9.1.1 PUH for measuring recorded disks

The optical system for measuring the optical parameters is shown in Figure 2. The optical system shall be used to measure the parameters specified for the recorded disk. Different components and locations of the components are permitted, provided that the performance remains the same as the set-up in Figure 2. The optical system shall be such that the detected light reflected from the entrance surface of the disk is minimized so as not to influence the accuracy of measurement. The combination of the polarizing beam splitter C with the quarter-wave plate D separates the incident optical beam and the beam reflected by the optical disk F. The beam splitter C shall have a p-s intensity reflectance ratio of at least 100. Optics G generates an astigmatic difference and collimates the light reflected by the recorded layer of the optical disk F for astigmatic focusing and read-out. The position of the quadrant photo detector H shall be adjusted so that the light spot becomes a circle the centre of which coincides with the centre of the quadrant photo detector H when the objective lens is focused on the recorded layer. An example of such a photo detector H is shown in Figure 2.

DRAFT 2009

Copyright International Organization for Standardization
Provided by IHS under license with ISO
No reproduction or networking permitted without license from IHS
Not for Resale

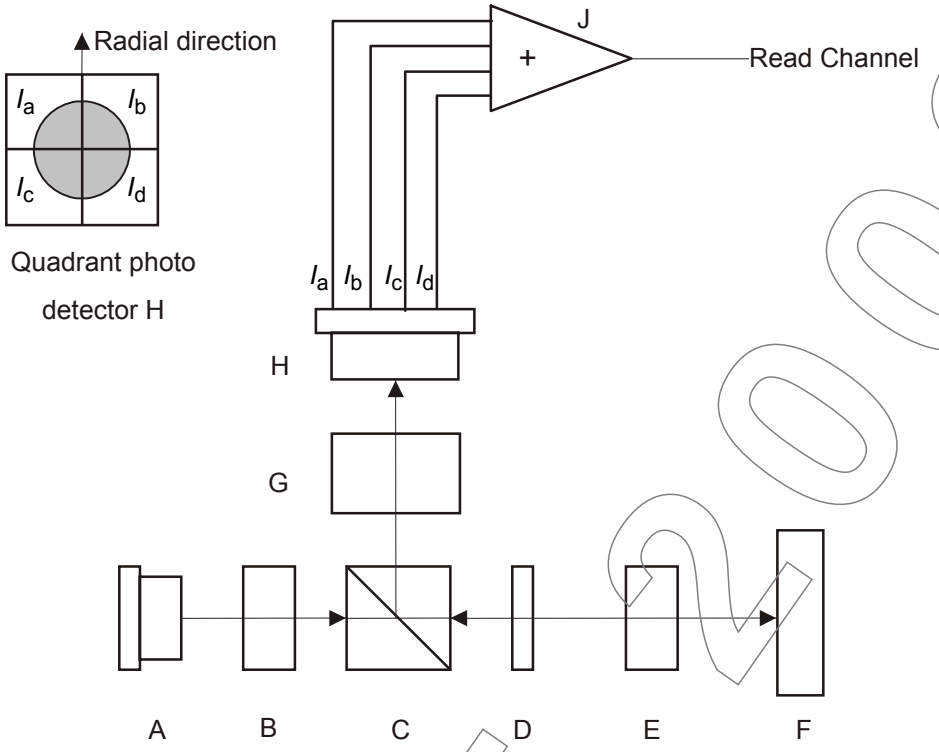

A Laser diode	F Optical disk
B Collimator lens	G Optics for the astigmatic focusing method
C Polarizing beam splitter	H Quadrant photo detector
D Quarter-wave plate	I_a, I_b, I_c, I_d Output currents from the quadrant photo detector
E Objective lens	J d.c. coupled amplifier

Figure 2 — Optical system of PUH for measuring recorded disk

The focused optical beam used for reading data shall have the following properties:

Wavelength (λ)	650 nm ± 5 nm
Polarization of the light	circular
Polarizing beam splitter	shall be used unless otherwise stated
Numerical aperture	0,60 ± 0,01
Light intensity at the rim of the pupil of the objective lens	60 % to 70 % of the maximum intensity level in radial direction, and over 90 % of the maximum intensity level in the tangential direction
Wave front aberration after passing through an ideal substrate (Thickness: 0,6 mm and index of refraction: 1,56)	0,033 λ rms max.
Normalized detector size on a disk	$100 < A/(M^2) < 144$ μm^2 , in which

A = the total surface area of the quadrant photo detector of the PUH and

M = the transversal magnification factor from the disk to its conjugate plane near the quadrant photo detector

Relative intensity noise (RIN) of the laser diode 10 log [(a.c. light power density / Hz) / d.c. light power]	-134 dB/Hz max.

Copyright International Organization for Standardization
Provided by IHS under license with ISO
No reproduction or networking permitted without license from IHS
Not for Resale

9.1.2 PUH for measuring unrecorded disks

The optical system for measuring the parameters is shown in Figure 3. The optical system shall be used to measure the parameters specified for the unrecorded disk and for making the recordings that are necessary for disk measurements. Different components and locations of the components are permitted, provided that the performance remains the same as the set-up in Figure 3. The optical system shall be such that the detected light reflected from the entrance surface of the disk is minimized so as not to influence the accuracy of the measurements.

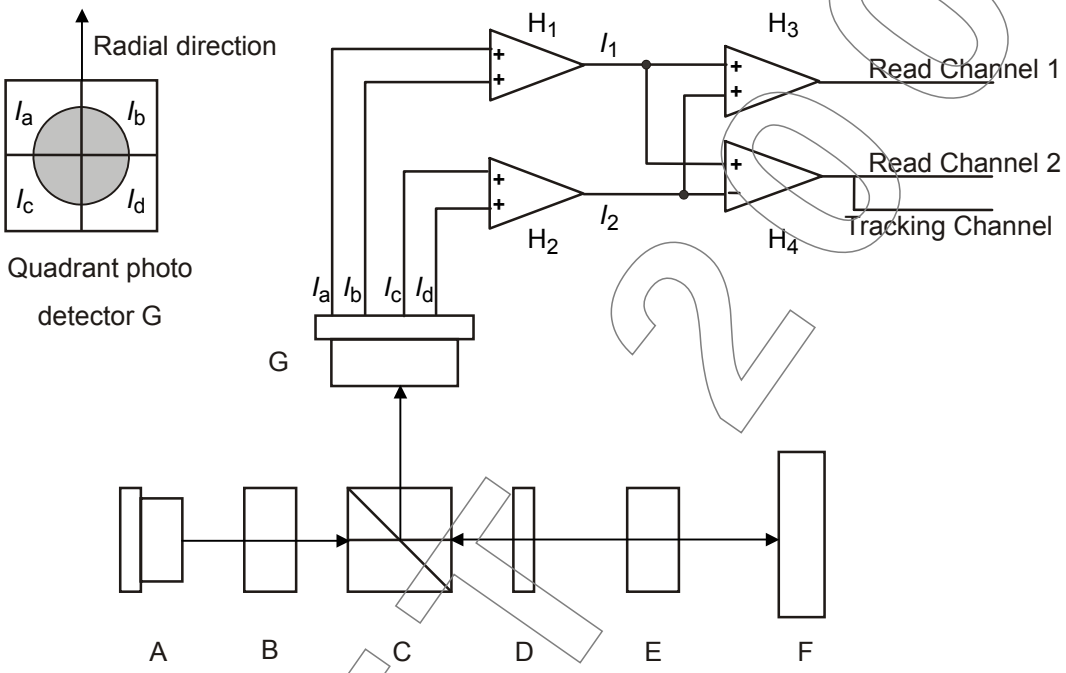

A Laser diode
B Collimator lens
C Polarizing beam splitter
D Quarter-wave plate
E Objective lens
F Optical disk
G Quadrant photo detector
H_1, H_2, H_3, H_4 d.c.-coupled amplifier
I_a, I_b, I_c, I_d Output currents from the quadrant photo detector

Figure 3 — Optical system of PUH for measuring unrecorded disks

The combination of polarizing beam splitter C and a quarter-wave plate D shall separate the entrance optical beam from a laser diode A and the reflected optical beam from an optical disk F. The beam splitter C shall have a p-s intensity reflectance ratio of at least 100.

The focused optical beam used for writing and reading data shall have the following properties:

Wavelength (λ)	$650\ ^{+10}_{-5}$ nm
Polarization of the light	circular
Numerical aperture	0,60 ± 0,01
Light intensity at the rim of the pupil of the objective lens	over 40 % of the maximum intensity level in the radial direction and over 50 % of the maximum intensity level in the tangential direction

--`,,```,,,,````-`-`,,`,,`,`,,`---
Copyright International Organization for Standardization
Provided by IHS under license with ISO
No reproduction or networking permitted without license from IHS
Not for Resale

Wave front aberration after passing through an ideal substrate
(Thickness: 0,6 mm and index of refraction: 1,56) 0,033 λ rms max.

Normalized detector size on a disk $100 < A/(M^2) < 144\ \mu m^2$, in which

A = the total surface area of the quadrant photo detector of the PUH and

M = the transversal magnification factor from the disk to its conjugate plane near the quadrant photo detector

Relative intensity noise (RIN) of the laser diode - 130 dB/Hz max.
10 log [(a.c. light power density /Hz) / d.c. light power]

9.2 Measurement conditions

9.2.1 Recorded and unrecorded disk

Clamping force 2,0 N ± 0,5 N
Clamping Zone See 10.4 and Annex A.
Tapered cone angle 40,0°± 0,5° see Annex E

9.2.2 Recorded disk

Scanning velocity at a Channel bit rate of 26,15625 Mbit/s 3,84 m/s ± 0,03 m/s
The measuring conditions for the recorded disk operational signals shall be as specified in Annex F.

9.2.3 Unrecorded disk

For recordings;
Scanning velocity at a Channel bit rate of 52,3125 Mbit/s 7,68 m/s ± 0,03 m/s
For measurements of Servo signals and Addressing signals (see 14.4 and 14.5);
Scanning velocity at a Channel bit rate of 26,15625 Mbit/s 3,84 m/s ± 0,03 m/s
The measuring conditions for the unrecorded disk operational signals shall be as specified in Annex K.

9.3 Normalized servo transfer function

In order to specify the servo system for axial and radial tracking, a function H_s is used (equation I). It specifies the nominal values of the open-loop transfer function H of the Reference Servo(s) in the frequency range 23,1 Hz to 10 kHz.

$$H_s(i\omega) = \frac{1}{3} \times \left(\frac{\omega_0}{i\omega} \right)^2 \times \frac{1 + \frac{3i\omega}{\omega_0}}{1 + \frac{i\omega}{3\omega_0}} \qquad \text{(I)}$$

where

$\omega = 2\pi f$

$\omega_0 = 2\pi f_0$

$i = \sqrt{-1}$

f_0 is the 0 dB crossover frequency of the open loop transfer function.

The crossover frequencies of the lead-lag network of the servo are given by

lead break frequency : $f_1 = f_0 \times 1/3$
lag break frequency : $f_2 = f_0 \times 3$

DRAFT 2009

Copyright International Organization for Standardization
Provided by IHS under license with ISO
No reproduction or networking permitted without license from IHS Not for Resale

9.4 Reference servo for axial tracking

9.4.1 Recorded disk

For an open loop transfer function H of the Reference Servo for axial tracking, $|1+H|$ is limited as schematically shown by the shaded surface of Figure 4.

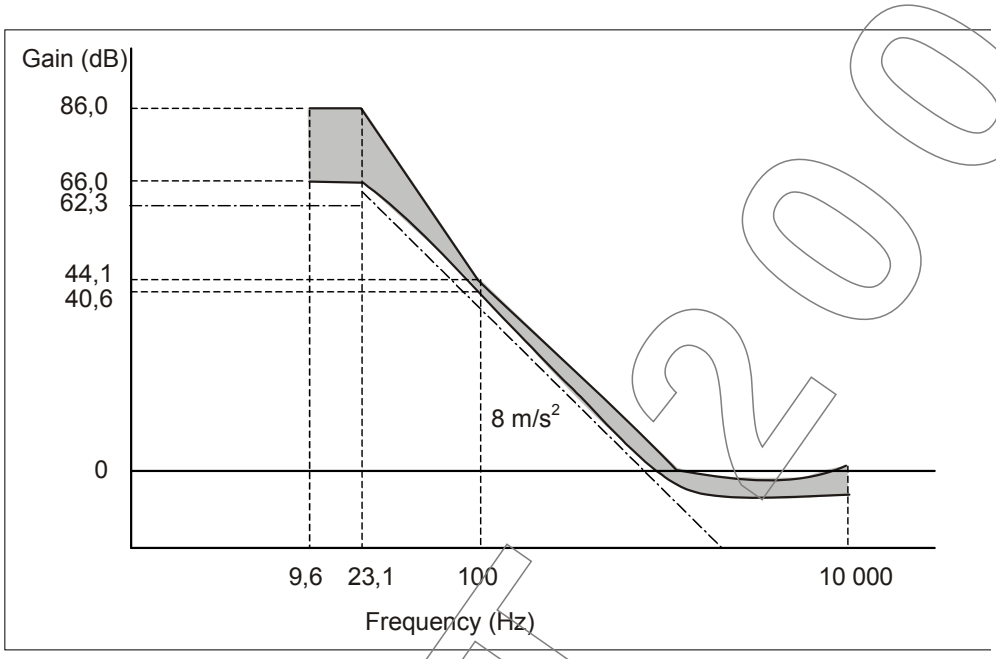

Figure 4 — Reference servo for axial tracking of recorded disk

Bandwidth 100 Hz to 10 kHz

$|1 + H|$ shall be within 20 % of $|1+H_s|$.

The crossover frequency $f_0 = \omega_0 / 2\pi$ shall be specified by equation (II), where α_{max} shall be 1,5 times larger than the expected maximum axial acceleration of 8 m/s^2. The tracking error e_{max} shall not exceed 0,23 µm. Thus, the crossover frequency f_0 shall be

$$f_0 = \frac{1}{2\pi}\sqrt{\frac{3\times\alpha_{max}}{e_{max}}} = \frac{1}{2\pi}\sqrt{\frac{3\times 8\times 1{,}5}{0{,}23\times 10^{-6}}} = 2{,}0\text{kHz} \qquad \text{(II)}$$

The axial tracking error e_{max} is the peak deviation measured axially above or below the 0 level.

Bandwidth 23,1 Hz to 100 Hz

$|1 + H|$ shall be within the limits defined by the following four points.

40,6 dB at 100 Hz ($|1 + H_s|$ - 20% at 100 Hz)
66,0 dB at 23,1 Hz ($|1 + H_s|$ - 20% at 23,1 Hz)
86,0 dB at 23,1 Hz ($|1 + H_s|$ - 20% at 23,1 Hz add 20 dB)
44,1 dB at 100 Hz ($|1 + H_s|$ + 20% at 100 Hz)

Bandwidth 9,6 Hz to 23,1 Hz

$|1 + H|$ shall be between 66,0 dB and 86,0 dB.

DRAFT 2009

Copyright International Organization for Standardization
Provided by IHS under license with ISO
No reproduction or networking permitted without license from IHS
Not for Resale

9.4.2 Unrecorded disk

For an open loop transfer function H of the Reference Servo for axial tracking, $|1+H|$ is limited as schematically shown by the shaded surface of Figure 5.

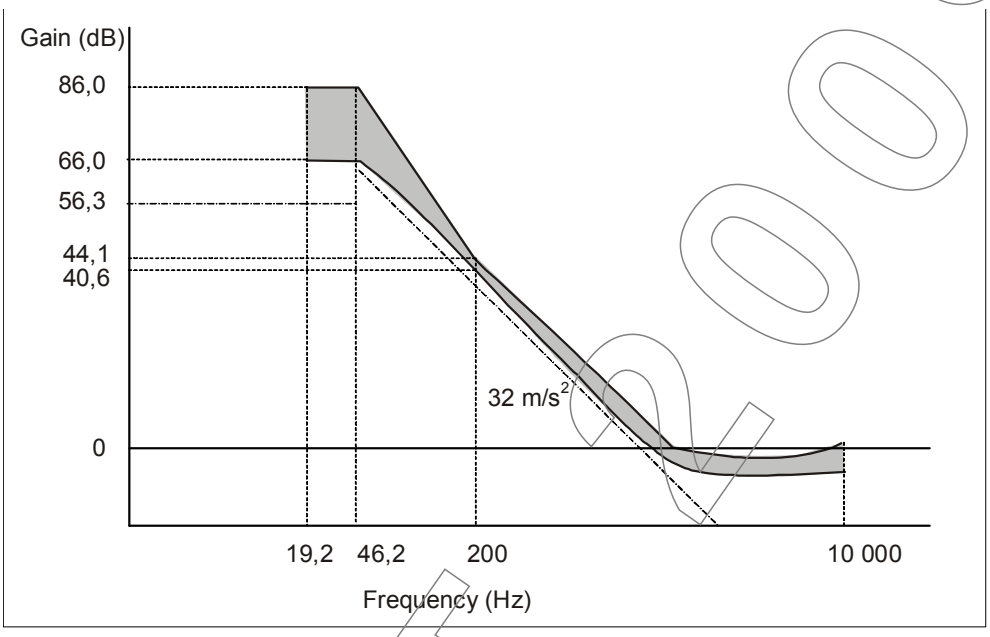

Figure 5 — Reference servo for axial tracking of unrecorded disk

Bandwidth 200 Hz to 10 kHz

$|1 + H|$ shall be within 20 % of $|1+H_s|$.

The crossover frequency $f_0 = \omega_0 / 2\pi$ shall be specified by equation (III), where α_{max} shall be 1,5 times larger than the expected maximum axial acceleration of 32 m/s^2. The tracking error e_{max} shall not exceed 0,23 µm. Thus, the crossover frequency f_0 shall be

$$f_0 = \frac{1}{2\pi}\sqrt{\frac{3\times\alpha_{max}}{e_{max}}} = \frac{1}{2\pi}\sqrt{\frac{3\times 32\times 1{,}5}{0{,}23\times 10^{-6}}} = 4{,}0\text{kHz} \qquad \text{(III)}$$

The axial tracking error e_{max} is the peak deviation measured axially above or below the 0 level.

Bandwidth 46,2 Hz to 200 Hz

$|1 + H|$ shall be within the limits defined by the following four points.

40,6 dB at 200 Hz ($|1 + H_s|$ - 20% at 200 Hz)
66,0 dB at 46,2 Hz ($|1 + H_s|$ - 20% at 46,2 Hz)
86,0 dB at 46,2 Hz ($|1 + H_s|$ - 20% at 46,2 Hz add 20 dB)
44,1 dB at 200 Hz ($|1 + H_s|$ + 20% at 200 Hz)

Bandwidth 19.2 Hz to 46.2 Hz

$|1 + H|$ shall be between 66,0 dB and 86,0 dB.

DRAFT 2009

Copyright International Organization for Standardization
Provided by IHS under license with ISO
No reproduction or networking permitted without license from IHS
Not for Resale

9.5 Reference servo for radial tracking

9.5.1 Recorded disk

For an open-loop transfer function, H, of the Reference servo for radial tracking, | 1+ H | shall be limited within the shaded area shown in Figure 6.

The radial track deviation is the peak deviation measured radially inward or outward from the 0 level.

Bandwidth from l00 Hz to 10k Hz

| 1 + H | shall be within 20 % of |1+H_s|.

The crossover frequency $f_0 = \omega_0 / 2\pi$ shall be given by the equation (IV), where α_{max} shall be 1,5 times as large as the expected radial acceleration of 1,1 m/s^2 and e_{max} shall not exceed 0,022 μm. Thus the crossover frequency f_0 shall be:

$$f_0 = \frac{1}{2\pi}\sqrt{\frac{3\times\alpha_{max}}{e_{max}}} = \frac{1}{2\pi}\sqrt{\frac{3\times1,1\times1,5}{0,022\times10^{-6}}} = 2,4 \text{ kHz} \qquad \text{(IV)}$$

Bandwidth from 23,1 Hz to 100Hz

| 1+ H | shall be within the limits enclosed by the following four points.

43,7 dB at 100 Hz	(| 1 + H_s | - 20 % at 100 Hz)
69,2 dB at 23,1 Hz	(| 1 + H_s | - 20 % at 23,1 Hz)
89,2 dB at 23,1 Hz	(| 1 + H_s | - 20 % at 23,l Hz add 20 dB)
47,3 dB at 100 Hz	(| 1 + H_s | + 20 % at 100 Hz)

Bandwidth from 9,6 Hz to 23,1 Hz

|1 + H | shall be between 69,2 dB and 89,2 dB.

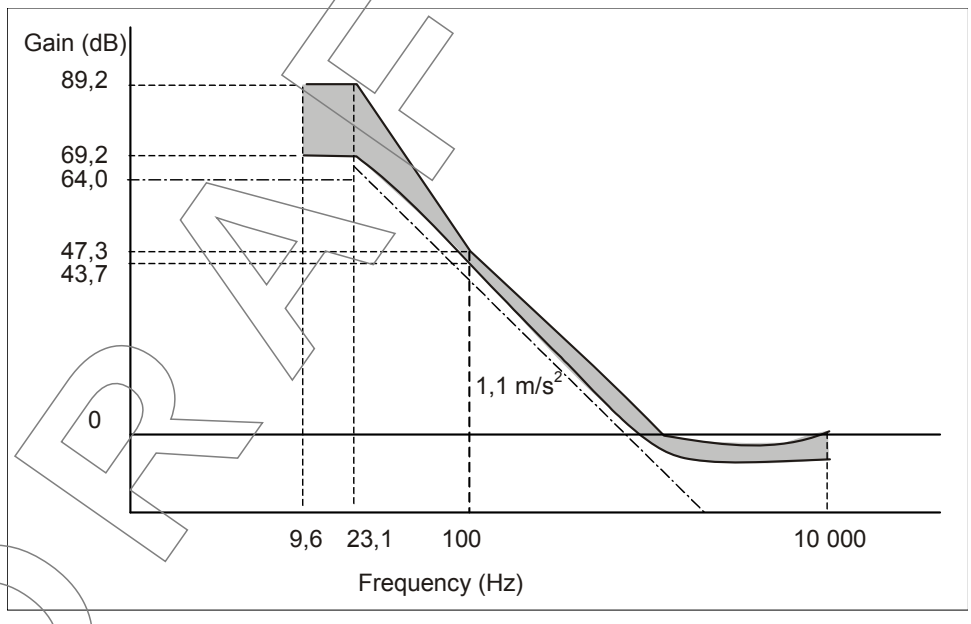

Figure 6 — Reference servo for radial tracking of recorded disk

DRAFT 2009

Copyright International Organization for Standardization
Provided by IHS under license with ISO
No reproduction or networking permitted without license from IHS
Not for Resale

9.5.2 Unrecorded disk

For an open-loop transfer function, H, of the Reference servo for radial tracking, $|1+H|$ shall be limited within the shaded area shown in Figure 7.

The radial track deviation is the peak deviation measured radially inward or outward from the 0 level.

Bandwidth from 200 Hz to 10 kHz

$|1 + H|$ shall be within 20 % of $|1+H_s|$.

The crossover frequency $f_0 = \omega_0 / 2\pi$ shall be given by the equation (V), where α_{max} shall be 1,5 times as large as the expected radial acceleration of 4,4 m/s^2 and e_{max} shall not exceed 0,022 μm. Thus the crossover frequency f_0 shall be:

$$f_0 = \frac{1}{2\pi}\sqrt{\frac{3\times\alpha_{max}}{e_{max}}} = \frac{1}{2\pi}\sqrt{\frac{3\times 4{,}4\times 1{,}5}{0{,}022\times 10^{-6}}} = 4{,}8 \text{ kHz} \qquad \text{(V)}$$

Bandwidth from 46,2 Hz to 200Hz

$|1+ H|$ shall be within the limits enclosed by the following four points.

43,7 dB at 200 Hz	($\|1 + H_s\|$ - 20 % at 200 Hz)
69,2 dB at 46,2 Hz	($\|1 + H_s\|$ - 20 % at 46,2 Hz)
89,2 dB at 46,2 Hz	($\|1 + H_s\|$ - 20 % at 46,2 Hz add 20 dB)
47,3 dB at 200 Hz	($\|1 + H_s\|$ + 20 % at 200 Hz)

Bandwidth from 19,2 Hz to 46,2 Hz

$|1 + H|$ shall be between 69,2 dB and 89,2 dB.

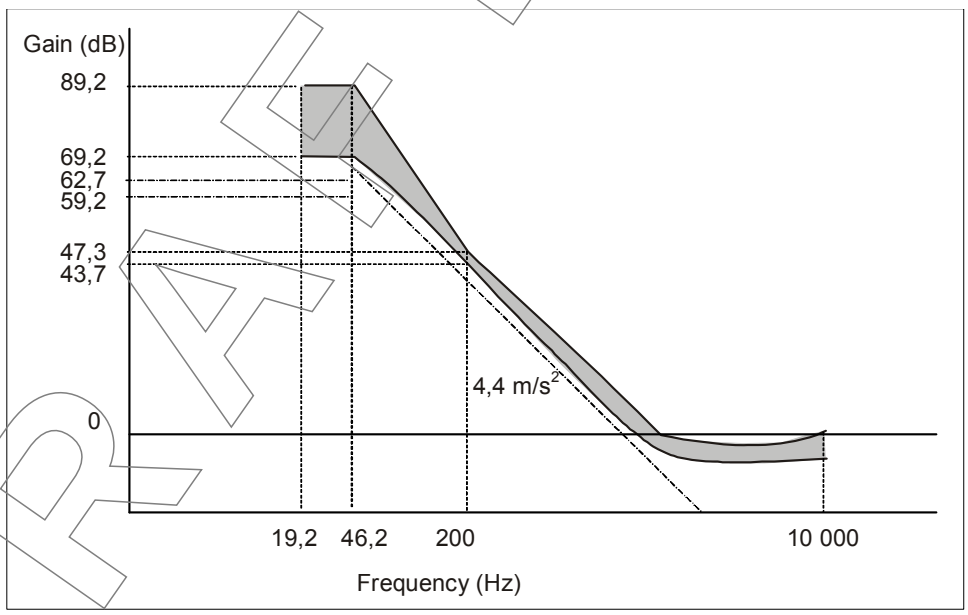

Figure 7 — Reference servo for radial tracking of recorded disk

DRAFT 2009

Copyright International Organization for Standardization
Provided by IHS under license with ISO
No reproduction or networking permitted without license from IHS
Not for Resale

Section 2 — Dimensional, mechanical and physical characteristics of the disk

10 Dimensional characteristics

Dimensional characteristics are specified for those parameters deemed mandatory for interchange and compatible use of the disk. Where there is freedom of design, only the functional characteristics of the elements described are indicated. Figures 8, 9 and 10 show the dimensional requirements in summarized form. The different parts of the disk are described from the centre hole to the outside rim.

The dimensions are referred to two Reference Planes P and Q.

Reference Plane P is the primary Reference Plane. It is the plane on which the bottom surface of the Clamping Zone (see 10.4) rests.

Reference Plane Q is the plane parallel to Reference Plane P at the height of the top surface of the Clamping Zone.

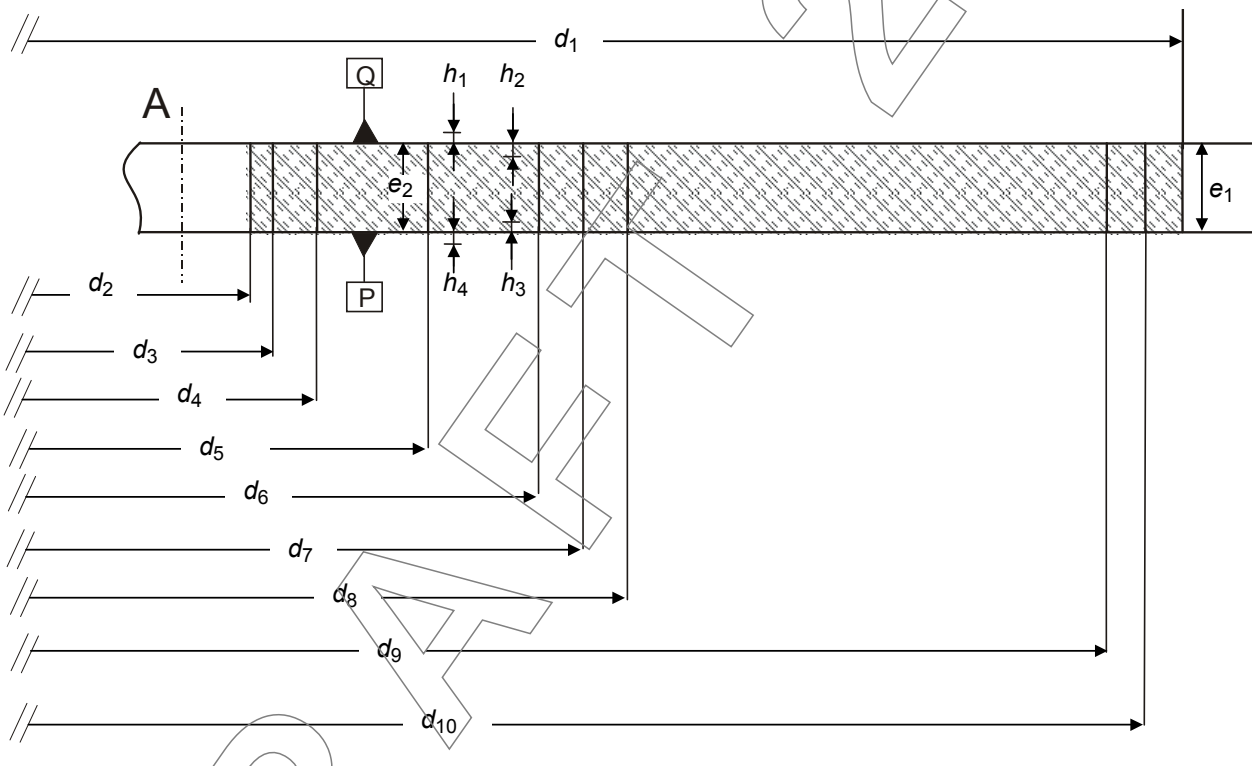

Figure 8 — Areas of the disk

DRAFT 2009

Copyright International Organization for Standardization
Provided by IHS under license with ISO
No reproduction or networking permitted without license from IHS
Not for Resale

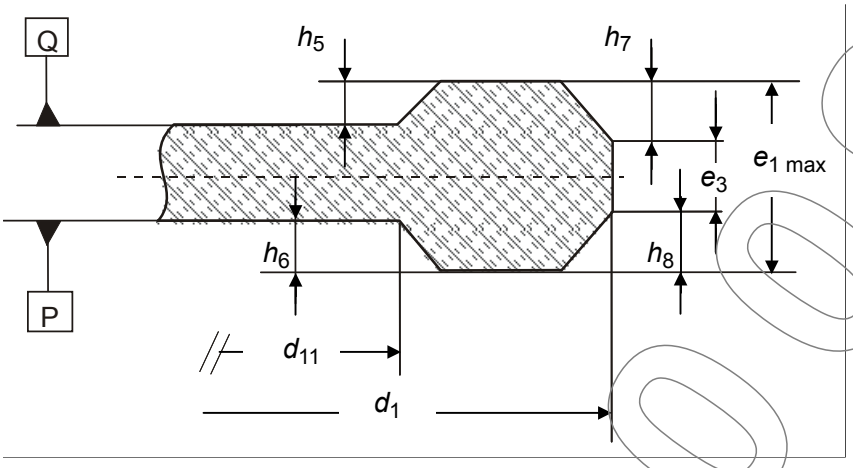

Figure 9 — Rim area

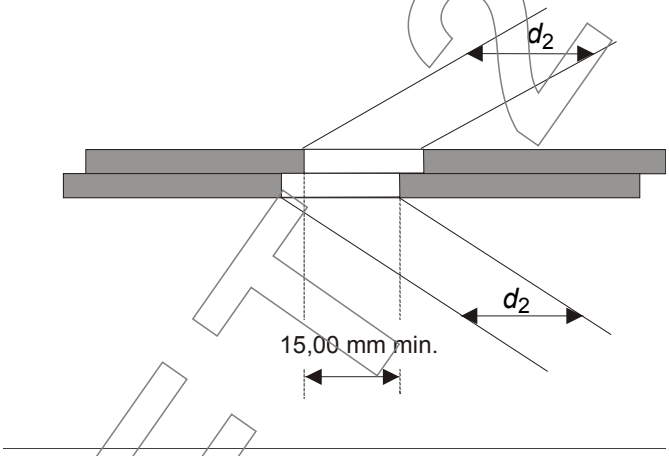

Figure 10 — Hole of the assembled disk

10.1 Overall dimensions

The 120 mm disk shall have an overall diameter

d_1 = 120,00 mm ± 0,30 mm

The 80 mm disk shall have an overall diameter

d_1 = 80,00 mm ± 0,30 mm

The centre hole of a substrate or a dummy substrate shall have a diameter

$$d_2 = 15{,}00\ ^{+\ 0{,}15\ \text{mm}}_{-\ 0{,}00\ \text{mm}}$$

The diameter of the hole of an assembled disk, i.e. with both parts bonded together, shall be 15,00 mm min. See Figure 10. There shall be no burr on both edges of the centre hole.

The edge of the centre hole shall be rounded off or chamfered. The rounded radius shall be 0,1 mm max. The chamfer shall extend over a height of 0,1 mm max.

The thickness of the disk, including adhesive layer and label(s), shall be

$$e_1 = 1{,}20\ ^{+\ 0{,}30\ \text{mm}}_{-\ 0{,}06\ \text{mm}}$$

See Figure 8.

Copyright International Organization for Standardization
Provided by IHS under license with ISO
No reproduction or networking permitted without license from IHS
Not for Resale

10.2 First transition area

In the area defined by diameter d_2 and

d_3 = 16,0 mm min.

the surface of the disk is permitted to be above the Reference Plane P and/or below Reference Plane Q by 0,10 mm max. See Figure 8.

10.3 Second transition area

This area shall extend between diameter d_3 and diameter

d_4 = 22,0 mm max.

In this area the disk may have an uneven surface of burrs up to 0,05 mm max. beyond Reference Planes P and/or Q. See Figure 8.

10.4 Clamping Zone

This zone shall extend between diameter d_4 and diameter

d_5 = 33,0 mm min.

Each side of the Clamping Zone shall be flat within 0,1 mm. The top side of the Clamping Zone, i.e. that of Reference Plane Q shall be parallel to the bottom side, i.e. Reference Plane P within 0,1 mm.

In the Clamping Zone the thickness e_2 of the disk shall be

$$e_2 = 1{,}20 \text{ mm} \begin{matrix} +\ 0{,}20 \text{ mm} \\ -\ 0{,}10 \text{ mm} \end{matrix}$$

See Figure 8.

10.5 Third transition area

This area shall extend between diameter d_5 and diameter

d_6 = 40,0 mm max. for the 120mm diameter disk or

d_6 = 37,0 mm max. for the 80mm diameter disk.

In this area the top surface is permitted to be above the Reference Plane Q by

h_1 = 0,25 mm max.

or below Reference Plane Q by

h_2 = 0,10 mm max.

The bottom surface is permitted to be above Reference Plane P by

h_3 = 0,10 mm max.

or below Reference Plane P by

h_4 = 0,25 mm max.

See Figure 8.

10.6 R-Information Zone

The R-Information Zone on Layer 0 shall extend from d_7 = 44,00 mm min. which is the beginning of the Inner Disk Testing Area to the beginning of the Lead-in Zone as specified in clause 28.

The R-Information Zone on Layer 1 shall extend from d_7 = 44,00 mm min. which is the beginning of the Inner Disk Testing Area to the end of the Lead-out Zone, as specified in clause 28.

In the R-Information Zone the thickness of the disk shall be equal to e_1 specified in 10.1.

See Figure 8.

DRAFT 2009

Copyright International Organization for Standardization
Provided by IHS under license with ISO
No reproduction or networking permitted without license from IHS
Not for Resale

10.6.1 Sub-divisions of the R-Information Zone

The main parts of the R-Information Zone are

- the Inner Disk Testing Areas (IDTA)
- the Recording Management Areas (RMA)

10.7 Information Zone

The Information Zone on Layer 0 shall extend from the beginning of the Lead-in Zone to diameter d_{10} the value of which is specified in Table 1.

The Information Zone on Layer 1 shall extend from the end of the Lead-out Zone to diameter d_{10} the value of which is specified in Table 1.

In the Information Zone the thickness of the disk shall be equal to e_1 specified in 10.1. See Figure 8.

10.7.1 Sub-divisions of the Information zone

The main parts of the Information Zone are

- the Lead-in Zone
- the Data Zones
- the Middle Zones
- the Lead-out Zone

10.7.1.1 Lead-in Zone

The Lead-in Zone shall extend on Layer 0 between the outer diameter of the R-Information Zone as specified in 26.3 and diameter d_8. See Figure 8.

10.7.1.2 Data Zone

The Data Zone on Layer 0 shall start at

$$d_8 = 48{,}0 \text{ mm} \begin{matrix} + 0{,}0 \text{ mm} \\ - 0{,}08 \text{ mm} \end{matrix}$$

and shall end at

d_9 = 116,2 mm max. for the 120 mm diameter disk or

d_9 = 76,2 mm max. for the 80 mm diameter disk.

See Figure 8.

The Data Zone on Layer 1 shall start at

$d_{8'} = d_8$ + 0.13 mm min.

and shall end at

$$d_{9'} = d_9 \begin{matrix} - 0{,}13 \text{ mm} \\ - 0{,}29 \text{ mm} \end{matrix}$$

10.7.1.3 Middle Zone

The Middle Zone on Layer 0 shall extend from diameter d_9 to diameter d_{10}.

The Middle Zone on Layer 1 shall extend from diameter $d_{9'}$ to diameter d_{10}.

The value of d_{10} depends on the length of the Data Zone as shown in Table 1.

See Figure 8.

10.7.1.4 Lead-out Zone

The Lead-out Zone shall extend on Layer 1 between the outer diameter of the R-Information Zone as specified in 26.3 and diameter $d_{8'}$.

DRAFT 2009

Copyright International Organization for Standardization
Provided by IHS under license with ISO
No reproduction or networking permitted without license from IHS
Not for Resale

Table 1 — End of the Information Zone

	Outer diameter d_9 of the Data Zone	Value of diameter d_{10}
120 mm disk	Less than 69,2 mm	$70{,}0\ ^{+1{,}0\ mm}_{+0{,}0\ mm}$ min.
	69,2 mm to 116,2 mm	d_9 + 0,8 mm min.
80 mm disk	Less than 69,2 mm	$70{,}0\ ^{+1{,}0\ mm}_{+0{,}0\ mm}$ min.
	69,2 mm to 76,2 mm	d_9 + 0,8 mm min.

10.8 Track geometry

In the R-Information Zone and Information Zone tracks are constituted by a 360° turn of a spiral.

The track pitch averaged over the data zone shall be 0,74 µm ± 0,01 µm.

The maximum deviation of the track pitch from 0,74 µm shall be ± 0,03 µm.

10.8.1 Track Path

In this standard, only the Opposite Track Path (OTP) is specified. Tracks are read starting on Layer 0 at the inner side towards outer side, continuing on Layer 1 from the outer side towards inner side of a disk as shown in Figure 11.

The spiral direction of Layer 1 is reversed from that of Layer 0.

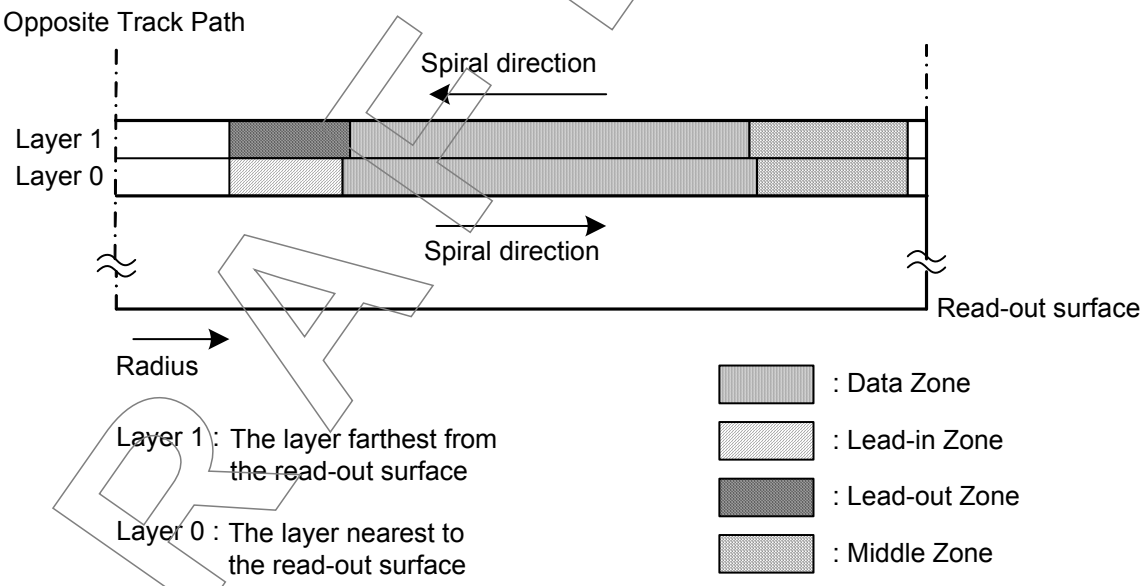

Figure 11 — Track Path

10.9 Channel bit length

The R-Information Zone and Information Zone shall be recorded in CLV mode. The Channel bit length averaged over the Data Zone shall be 146,7 nm ± 1,5 nm.

10.10 Rim area

The rim area shall be that area extending from diameter

Copyright International Organization for Standardization
Provided by IHS under license with ISO
No reproduction or networking permitted without license from IHS
Not for Resale

d_{11} = 118,0 mm min. for the 120 mm disk or

d_{11} = 78,0 mm min. for the 80 mm disk

to diameter d_1. In this area the top surface is permitted to be above Reference Plane Q by

h_5 = 0,1 mm max.

and the bottom surface is permitted to be below Reference Plane P by

h_6 = 0,1 mm max.

The total thickness of this area shall not be greater than 1,50 mm, i.e. the maximum value of e_1. The thickness of the rim proper shall be

e_3 = 0,6 mm min.

The outer edges of the disk shall be either rounded off with a rounding radius of 0,2 mm max. or be chamfered over

h_7 = 0,2 mm max.

h_8 = 0,2 mm max.

See Figure 9.

10.11 Remark on tolerances

All heights specified in the preceding clauses and indicated by h_i are independent from each other. This means that, for example, if the top surface of the third transition area is below Reference Plane Q by up to h_2, there is no implication that the bottom surface of this area has to be above Reference Plane P by up to h_3. Where dimensions have the same - generally maximum - numerical value, this does not imply that the actual values have to be identical.

10.12 Label

The label shall be placed on the side of the disk opposite the entrance surface for the information to which the label is related. The label shall be placed either on an outer surface of the disk or inside the disk bonding plane. In the former case, the label shall not extend over the Clamping Zone. In the latter case, the label may extend over the Clamping Zone. In both cases, the label shall not extend over the rim of the centre hole nor over the outer edge of the disk. The label should not affect the performance of the disk. Labels shall not be attached to either of the read out surfaces of a double sided disk.

11 Mechanical parameters

11.1 Mass

The mass of the 120 mm disk shall be in the range 13 g to 20 g.

The mass of the 80 mm disk shall be in the range 6 g to 9 g.

11.2 Moment of inertia

The moment of inertia of the 120 mm disk, relative to its rotation axis, shall not exceed 0,040 g·m^2.

The moment of inertia of the 80 mm disk, relative to its rotation axis, shall not exceed 0,010 g·m^2.

11.3 Dynamic imbalance

The dynamic imbalance of the 120 mm disk, relative to its rotation axis, shall not exceed 0,0025 g·m.

The dynamic imbalance of the 80 mm disk, relative to its rotation axis, shall not exceed 0,0010 g·m.

DRAFT 2009

Copyright International Organization for Standardization
Provided by IHS under license with ISO
No reproduction or networking permitted without license from IHS
Not for Resale

11.4 Sense of rotation

The sense of rotation of the disk shall be counter clockwise as seen by the optical system.

11.5 Runout

11.5.1 Axial runout

When measured by the PUH with the Reference Servo for axial tracking, the disk rotating at the scanning velocity, the deviation of the recorded layer from its nominal position in the direction normal to the Reference Planes shall not exceed 0,3 mm for the 120 mm disk and 0,2 mm for the 80 mm disk.

The residual tracking error below 10 kHz, measured using the Reference Servo for axial tracking, shall be less than 0,23 µm. The measuring filter shall be a Butterworth LPF, f_c (-3dB): 10 kHz, slope: -80 dB/decade.

11.5.2 Radial runout

The runout of the outer edge of the disk shall be less than 0,30 mm, peak-to-peak.

The radial runout of tracks at the rotational frequency determined by the scanning velocity shall be less than 40 µm and 60 µm peak-to-peak, for Layer 0 and Layer 1 respectively.

The residual tracking error below 1,1 kHz, measured using the Reference Servo for radial tracking, shall be less than 0,022 µm. The measuring filter shall be a Butterworth LPF, f_c (-3dB): 1,1 kHz, slope: -80 dB/decade.

The rms noise value of the residual error signal in the frequency band from 1,1 kHz to 10 kHz, measured with an integration time of 20 ms, using the Reference Servo for radial tracking, shall be less than 0,016 µm. The measuring filter shall be a Butterworth BPF, frequency range (-3dB): 1,1 kHz, slope: +80 dB/decade to 10 kHz, slope: - 80 dB/decade.

12 Optical parameters

12.1 Recorded and unrecorded disk parameters

12.1.1 Index of refraction

The index of refraction RI of the substrate shall be 1,55 ± 0,10.

The index of refraction of the space layer shall be 1,49 min. and (RI ± 0,10).

12.1.2 Thickness of the transparent substrate

The thickness of the substrate or the thickness of the substrate including the space layer shall be determined by its index of refraction as specified in Figure 12.

The thickness of the space layer shall be: $55\ \mu m \begin{smallmatrix} +\ 15\ \mu m \\ -\ 10\ \mu m \end{smallmatrix}$.

The variation of the space layer thickness shall be ± 10 µm max. within a disk, and ± 4 µm max. within one revolution of a disk.

DRAFT 0.09

Copyright International Organization for Standardization
Provided by IHS under license with ISO
No reproduction or networking permitted without license from IHS
Not for Resale

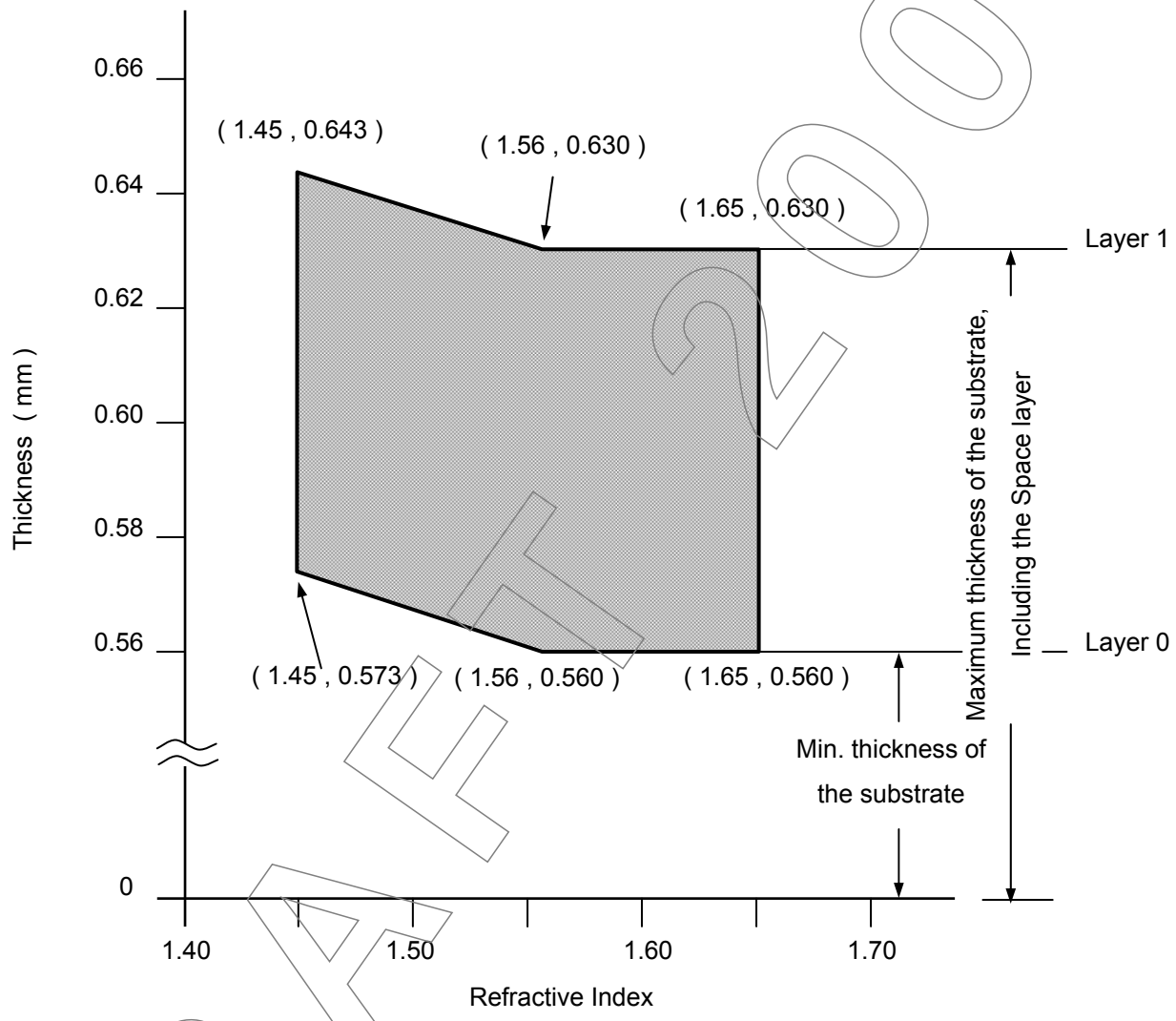

Figure 12 — Substrate thickness as a function of the index of refraction

12.1.3 Angular deviation

The angular deviation is the angle α between a parallel incident beam and the reflected beam. The incident beam shall have a diameter in the range 0,3 mm to 3,0 mm. This angle includes deflection due to the entrance surface and to unparallelism of the recorded layer, see Annex A, Figure A.1. It shall meet the following requirements when measured according to Annex A.

In radial direction : α = 0,80° max.
In tangential direction : α = 0,30° max.

12.1.4 Birefringence of the transparent substrate

The birefringence of the transparent substrate shall be 100 nm max. when measured according to Annex B.

Copyright International Organization for Standardization
Provided by IHS under license with ISO
No reproduction or networking permitted without license from IHS
Not for Resale

12.2 Recorded disk reflectivity

When measured according to Annex D, the reflectivity of the recorded layer(s) shall be 5 % to 10 % (PUH with PBS).

12.3 Unrecorded disk parameters

12.3.1 Polarity of reflectivity modulation

The reflectivity is high in unrecorded areas and changes to low in the recorded marks.

12.3.2 Recording power sensitivity variation

The variation in optimum recording power over the surface of the disk shall be less than $\pm$ 0,05 P_o. See Annex H.

DRAFT 2009

Copyright International Organization for Standardization
Provided by IHS under license with ISO
No reproduction or networking permitted without license from IHS
Not for Resale

Section 3 — Operational signals

13 Operational signals for recorded disk

13.1 Measurement conditions

The operational signals shall be measured after 10 times overwriting 8/16 modulated data in more than 5 tracks.

The Pick-Up Head (PUH) shall be as specified in 9.1.1.

The measurement conditions shall be as specified in 9.2.1 and 9.2.2.

The HF signal equalizing for jitter measurement shall be as specified in Annex F.

The normalized servo transfer function shall be as specified in 9.3.

The reference servo for axial tracking shall be as specified in 9.4.

The reference servo for radial tracking shall be as specified in 9.5.

13.2 Read conditions

The power of the read spot shall not exceed 1,0 mW (continuous wave).

13.3 Recorded disk high frequency (HF) signals

The HF signal is obtained by summing the currents of the four elements of the quadrant photo detector. These currents are modulated by diffraction and reflectivity changes of the light beam at the recorded marks representing the information on the recorded layer. Recording power conditions are specified in Annex H. All measurements, except jitter are executed on the HF signal before equalizing.

13.3.1 Modulated amplitude

The peak-to-peak value generated by the longest recorded mark and space is I_{14}.

The peak value corresponding to the HF signal before high-pass filtering is I_{14H}.

The peak-to-peak value generated by the shortest recorded mark and space is I_3.

The zero level is the signal level obtained when no disk is inserted.

These parameters shall satisfy the following requirements.

$I_{14} / I_{14H} = 0{,}50$ min.

$I_3 / I_{14} = 0{,}20$ min.

The maximum value of (I_{14H} max. - I_{14H} min.) / I_{14H} max. shall be as specified in Table 2.

See Figure 13.

Table 2 — Maximum value of (I_{14H} max. - I_{14H} min.) / I_{14H} max.

	Over each layer	Over one revolution
PUH with PBS	0,33	0,15
PUH without PBS	0,20	0,10

13.3.2 Signal asymmetry

The value of asymmetry shall satisfy the following requirements when a disk is recorded at the optimum recording power P_o. See Figure 13.

$$-0{,}05 \le [(I_{14H} + I_{14L}) / 2 - (I_{3H} + I_{3L}) / 2] / I_{14} \le 0{,}15$$

where

$(I_{14H} + I_{14L}) / 2$ is the centre level of I_{14}

Copyright International Organization for Standardization
Provided by IHS under license with ISO
No reproduction or networking permitted without license from IHS
Not for Resale

(I_{3H} + I_{3L}) / 2 is the centre level of I_3 .

13.3.3 Cross-track signal

The cross-track signal is derived from the HF signal when low pass filtered with a cut off frequency of 30 kHz when the light beam crosses the tracks. See Figure 14. The low pass filter is a 1st-order filter.

The cross-track signal shall meet the following requirements.

$I_T = I_H - I_L$

I_T/I_H = 0,10 min.

where I_H is the peak value of this signal and I_T is the peak-to-peak value.

13.4 Quality of signals

13.4.1 Jitter

Jitter is the standard deviation σ of the time variation of the digitized data passed through the equalizer. The jitter of the leading and the trailing edges is measured relative to the clock of the phase-lock loop and normalized by the Channel bit clock interval.

Jitter shall be less than 9 % of the Channel bit clock period, when measured according to Annex F.

13.4.2 Random errors

A row of an ECC Block (see clause 19) that has at least 1 byte in error constitutes a PI error. In any 8 consecutive ECC Blocks the total number of PI errors before correction shall not exceed 280.

13.4.3 Defects

The diameter of local defects shall meet the following requirements

- for air bubbles it shall not exceed 100 µm,
- for black spots causing birefringence it shall not exceed 200 µm,
- for black spots not causing birefringence it shall not exceed 300 µm.

In addition, over a distance of 80 mm in scanning direction of tracks, the following requirements shall be met

- the total length of defects larger than 30 µm shall not exceed 300 µm,
- there shall be at most 6 such defects.

13.5 Servo signals

The output currents of the four quadrants of the quadrant photo detector shown in Figure 15 are identified by I_a, I_b, I_c and I_d.

13.5.1 Differential phase tracking error signal

The differential phase tracking error signal shall be derived from the phase difference between diagonal pairs of detectors elements when the light beam crosses the tracks: Phase (I_a + I_c) - Phase (I_b + I_d), see Figure 16. The differential phase tracking error signal shall be low-pass filtered with a cut-off frequency of 30 kHz, see Annex C. This signal shall meet the following requirements, see Figure 16.

Amplitude

At the positive 0 crossing $\overline{\Delta t}/T$ shall be in the range 0,5 to 1,1 at 0,10 µm radial offset, where $\overline{\Delta t}$ is the average time difference derived from the phase difference between diagonal pairs of detector elements, and T is the Channel bit clock period.

Asymmetry

The asymmetry shall meet the following requirement, see Figure 16.

Copyright International Organization for Standardization
Provided by IHS under license with ISO
No reproduction or networking permitted without license from IHS
Not for Resale

$$\frac{|T_1 - T_2|}{|T_1 + T_2|} \leq 0{,}2$$

where

– T_1 is the positive peak value of $\overline{\Delta t}$ / T,

– T_2 is the negative peak value of $\overline{\Delta t}$ / T.

13.5.2 Tangential push-pull signal

This signal shall be derived from the instantaneous level of the differential output (I_a + I_d) - (I_b + I_c). It shall meet the following requirement, see Figure 17.

$$0 \leq \frac{[(I_a + I_d) - (I_b + I_c)]_{pp}}{I_{14}} \leq 0{,}9$$

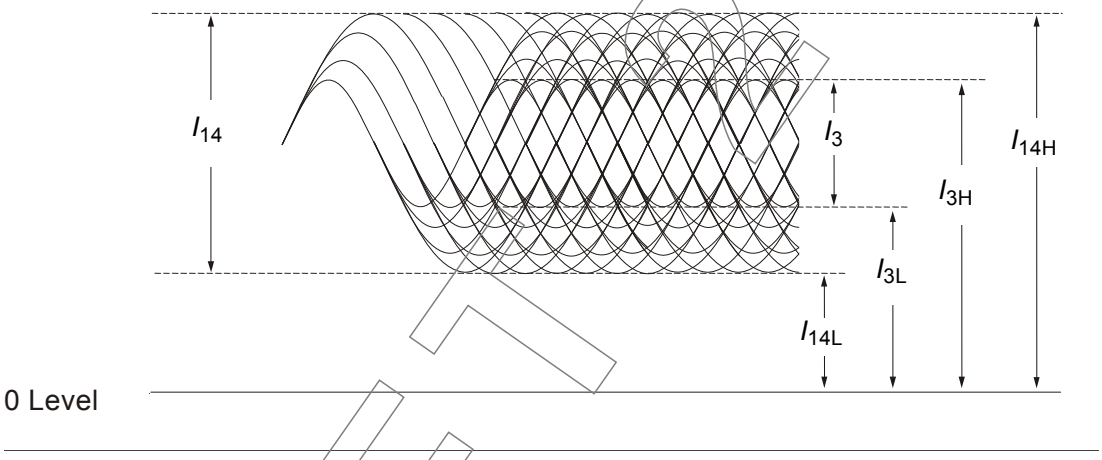

Figure 13 — Modulated amplitude

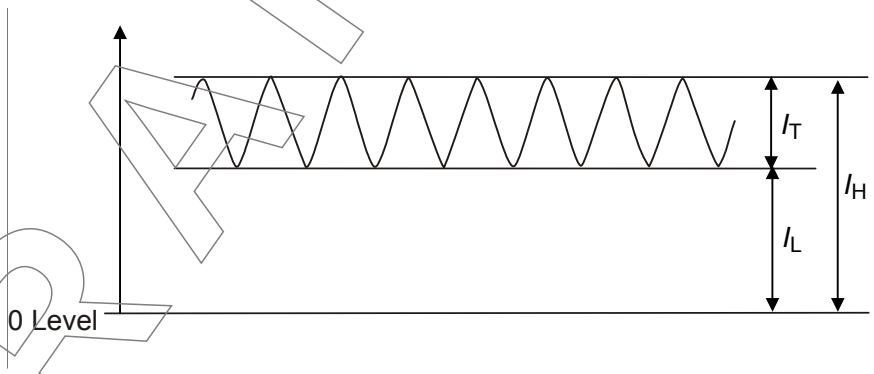

Figure 14 — Cross-track signal

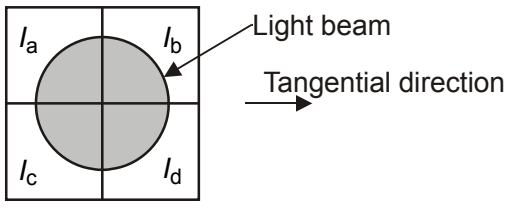

Figure 15 — Quadrant photo detector

Copyright International Organization for Standardization
Provided by IHS under license with ISO
No reproduction or networking permitted without license from IHS
Not for Resale

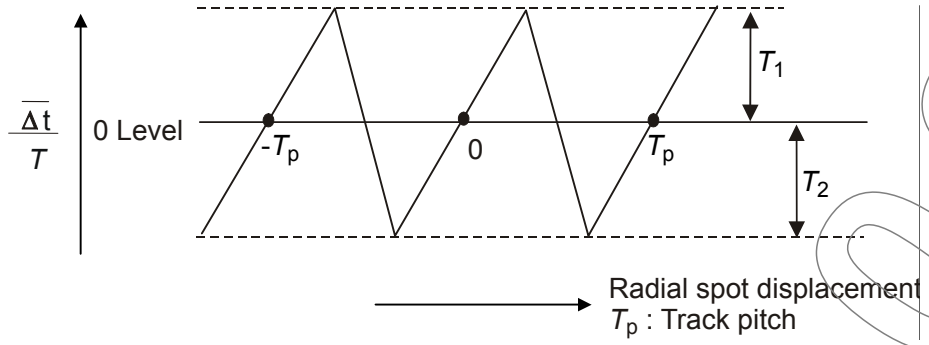

Figure 16 — Differential phase tracking error signal

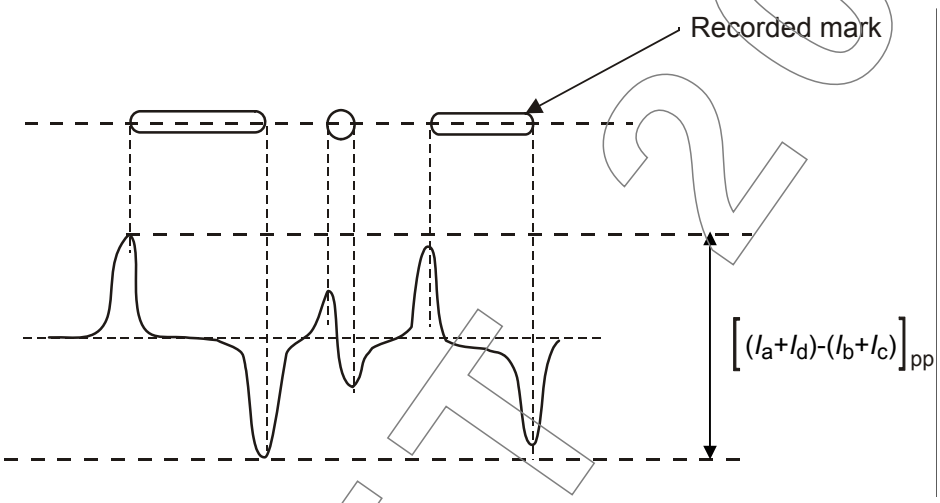

Figure 17 — Tangential push-pull signal

13.6 Groove wobble signal

The output current of each quadrant photo detector element of the PUH are I_a, I_b, I_c and I_d, see Figure 15.

The groove wobble signal is derived from the differential output when the light beam is following a track, and is $[(I_a + I_b) - (I_c + I_d)]$.

The groove wobble signal shall meet the following requirements.

The locking frequency for the groove wobble shall be 8 times the SYNC Frame frequency.

CNR of the groove wobble signal shall be greater than 31 dB (RBW = 1 kHz).

The CNR of the groove wobble signal shall be measured for the average value using a spectrum analyser where the Resolution Bandwidth (RBW) setting is 1 kHz, see Figure 18.

DRAFT 2009

Copyright International Organization for Standardization
Provided by IHS under license with ISO
No reproduction or networking permitted without license from IHS
Not for Resale

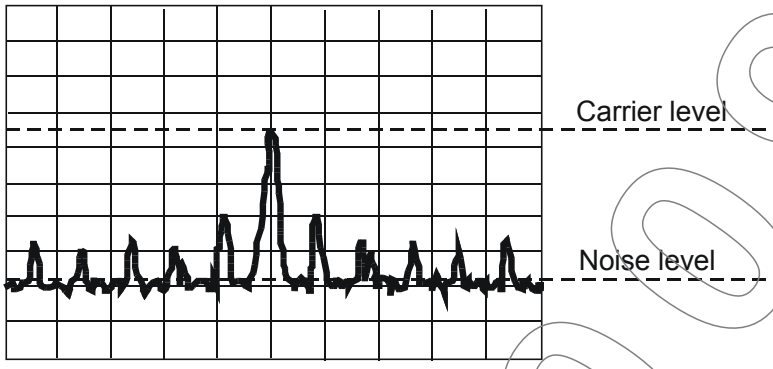

Figure 18 — Measurement of the wobble CNR

14 Operational signals for the unrecorded disk

14.1 Measurement conditions

- The drive optical Pick-Up Head (PUH) for measurement of the unrecorded disk parameters and for making the recordings necessary for disk measurements shall be as specified in 9.1.2.
- The measurement conditions shall be as specified in 9.2.1 and 9.2.3.
- The normalized servo transfer function shall be as specified in 9.3.
- The reference servo for axial tracking shall be as specified in 9.4.
- The reference servo for radial tracking shall be as specified in 9.5.

14.2 Recording conditions

- General recording strategy : In groove
- Optimum recording power : Determined by OPC specified in Annex H
- Optimum recording power range of all disks : $7,5\ mW \leq P_o \leq 35,0\ mW$
- Optimum erasing power range of all disks : $3,0\ mW \leq P_e \leq 16,0\ mW$
- Bias power : $P_b \leq 0,7\ mW$
- Recording power window : $P_o \pm 0,25\ mW$

14.3 Write strategy for media testing

During the recordings necessary for disk measurements using the PUH specified in 9.1.2, the laser power shall be modulated according to the write strategy for each layer, see Figure 19 and Figure 20 respectively.

14.3.1 Write strategy for Layer 0

Each write pulse consists of four parts; a top pulse, a multi-pulse train, a cooling pulse and an erase top pulse with T representing the length of one clock period.

This is also recommended for Layer 1 as an option in addition to the write strategy specified in 14.3.2.

The top pulse is generated by starting its leading edge a short time after the leading edge of the recording data, and the trailing edge of the top pulse can be shifted by dnTtop (n = 3 to 11 and 14) on the basis of the 2T after the leading-edge time of the recording data. dnTtop shall indicate the shift of the trailing edge of the top pulse according to the recording data length (Twd). The direction of dnTtop is defined in Figure19. The top pulse width (Ttop) shall be kept regardless of the trailing edge shift.

The multi-pulse train starts at 2T after the leading edge time of the recording data and ends at the trailing edge time of the recording data. The period of the multi-pulse train shall be T, and its width is Tmp.

DRAFT 2009
Copyright International Organization for Standardization
Provided by IHS under license with ISO
No reproduction or networking permitted without license from IHS
Not for Resale

The cooling pulse starts at the trailing edge time of the recording data, and its length is Tcl.

The erase top pulse starts from the end of cooling pulse, and its width is Tet. It is recommended to apply Tet to Layer 0.

Ttop, dnTtop, Tmp, Tcl and Tet shall be given in the Write Strategy code, see 26.1.6.1.

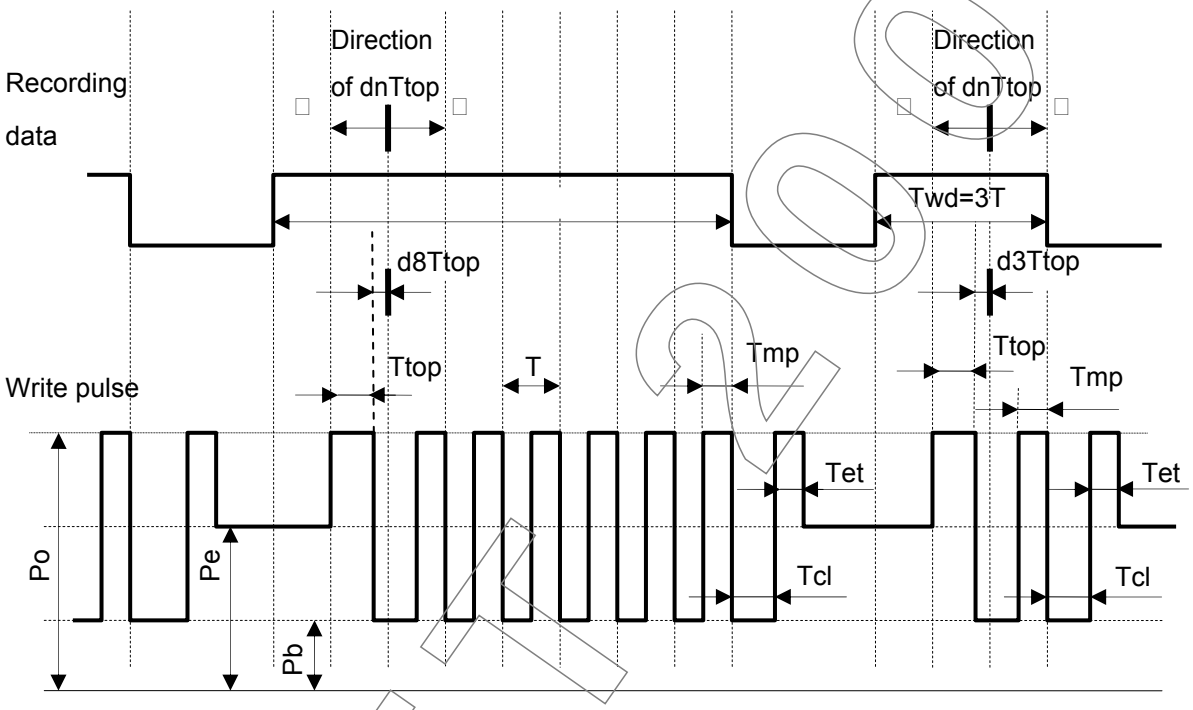

Figure 19 — Write pulse modulation for Layer 0

14.3.2 Write strategy for Layer 1

Each write pulse of length 4T to 11T and 14T consists of three parts; a multi-pulse train, a last pulse and a cooling pulse with T representing the length of one clock period.

The parameters of the last pulse for the even and the odd mark length are determined independently.

The write pulse for a 3T mark consists of two parts; a top pulse and a cooling pulse.

Each multi-pulse train for even T marks (4T, 6T, 8T, 10T and 14T) starts at the leading edge of the recording data and ends at 2T before the trailing edge of the recording data.

The period of the multi-pulse train shall be 2T.

Each last pulse for even T marks is generated by starting its leading edge 2T after the leading edge of the last multi-pulse, the trailing edge of the last pulse is ended around at the trailing edge of the recording data.

The leading edge of the last pulse can be shifted, and its shift (eTdlp1) and the difference (eTdlp2) between the last pulse width and the multi-pulse width shall be given in the Write Strategy code, see 26.1.6.1.

The last pulse width is represented by adding the difference of the width to the multi-pulse width (Tmp).

The cooling pulse width for even T (eTcl) marks shall be given in the Write Strategy code, see 26.1.6.1.

The last and cooling pulse widths shall be kept regardless of the leading edge shift.

--`,,```,,,,````-`-`,,`,,`,`,,`---
Copyright International Organization for Standardization
Provided by IHS under license with ISO
No reproduction or networking permitted without license from IHS
Not for Resale

Each multi-pulse train for odd T (5T, 7T, 9T and 11T) marks starts at the leading edge of the recording data and ends at 3T before the trailing edge of the recording data.

The period of the multi-pulse train shall be 2T.

Each last pulse for odd T marks is generated by starting its leading edge 2T after the leading edge of the last multi-pulse, the trailing edge of the last pulse is ended at around 1T before the trailing edge of the recording data.

The leading edge of the last pulse can be shifted, and its shift (oTdlp1) and the difference (oTdlp2) between the last pulse width and the multi-pulse width shall be given in the Write Strategy code, see 26.1.6.1.

The last pulse width is represented as the sum of the difference and the multi-pulse width (Tmp).

The cooling pulse width of length odd T (oTcl) shall be given in the Write Strategy code, see 26.1.6.1.

The last and cooling pulse width shall be kept regardless of the leading edge shift.

The multi-pulse width (Tmp) shall be independent of the recording data length and shall be given in the Write Strategy code, see 26.1.6.1.

The top pulse for a 3T mark is generated by starting its leading edge at the leading edge of the first multi-pulse for the other lengths, the trailing edge is ended independently of the data clock.

The leading edge of the top pulse can be shifted and its shift (dT3) and the top pulse width (T3) shall be given in the Write Strategy code, see 26.1.6.1.

The cooling pulse width for a 3T mark (3Tcl) shall be given in the Write Strategy code, see 26.1.6.1.

The top pulse width and the cooling pulse width shall be kept regardless of the leading edge shift of the top pulse.

DRAFT 2.0

Copyright International Organization for Standardization
Provided by IHS under license with ISO
No reproduction or networking permitted without license from IHS
Not for Resale

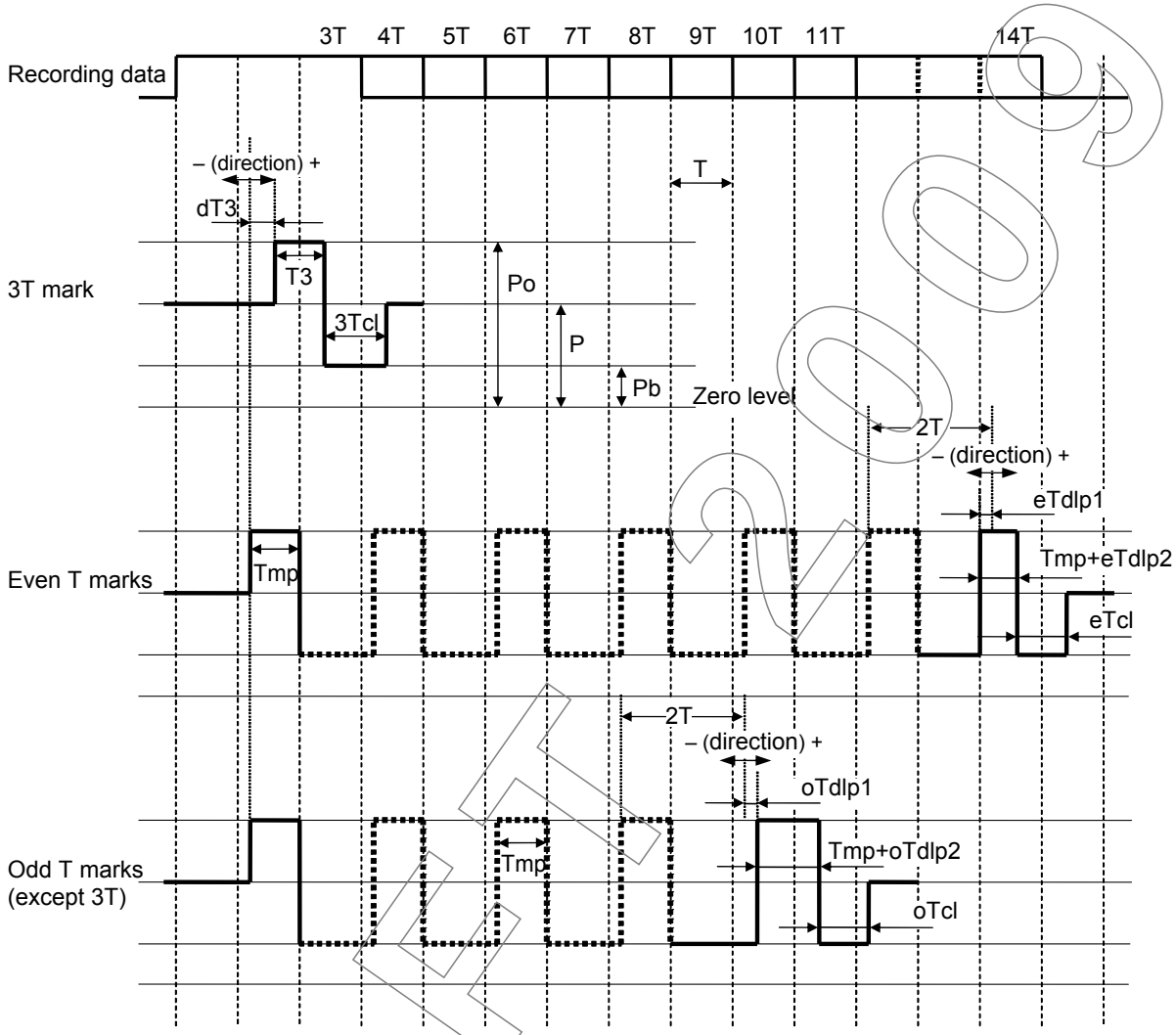

Figure 20 — Write pulse modulation for Layer 1

14.3.3 Definition of the write pulse

The write pulse from the objective lens shall be as shown in Figure 21.

The rise times (T_r) and fall times (T_f) shall not exceed 2 ns.

DRAFT 2009

Copyright International Organization for Standardization
Provided by IHS under license with ISO
No reproduction or networking permitted without license from IHS
Not for Resale

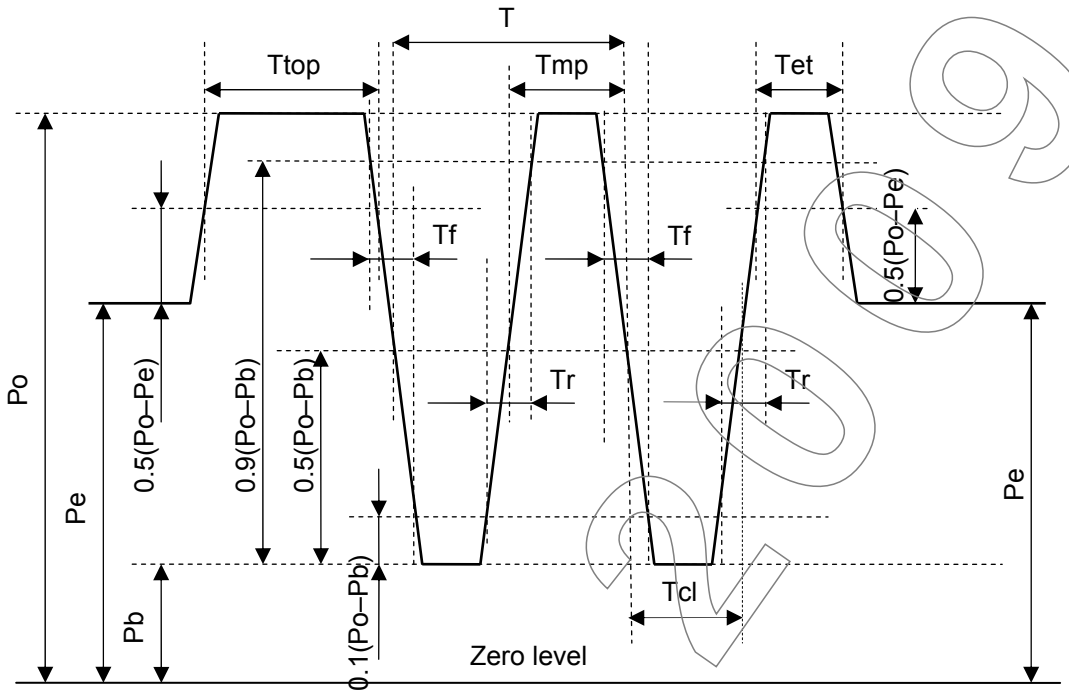

Figure 21 — Write pulse

14.4 Servo signals

The output currents of the four quadrants of the quadrant photo detector are I_a, I_b, I_c, and I_d, see Figure 22. The photo detector elements (I_a and I_b) are located at a greater radius than elements (I_c and I_d).

14.4.1 Radial push-pull tracking error signal

The radial push-pull tracking error signal is derived from the differential output of the detector elements when the light beam crosses the tracks and shall be $[(I_a + I_b) - (I_c + I_d)]$. The radial push-pull tracking error signal shall be measured with the PUH specified in 9.1.2 before and after recording and is low pass filtered with a cut-off frequency 30 kHz.

The radial push-pull amplitude before recording (PPb) and after recording (PPa) shown in Figure 23 are defined as:

PPb, PPa = $|(I_a + I_b) - (I_c + I_d)|_{a.c.} / |(I_a + I_b + I_c + I_d)|_{d.c.}$

$|(I_a + I_b + I_c + I_d)|_{d.c}$ shall be measured from zero level to the average level of $|(I_a + I_b + I_c + I_d)|_{a.c}$ (see Figure 23).

The radial push-pull ratio (PPr) is defined as:

PPr = PPb / PPa.

The above parameters shall meet the following requirements.

- PPb signal amplitude: $0{,}22 < PPb < 0{,}44$
- Push Pull ratio: $0{,}6 < PPr < 1{,}2$
- Variation in PPb signal: $\Delta PPb < 15\ \%$

where ΔPPb = [(PPb) max. - (PPb) min.] / [(PPb) max. + (PPb) min.]

- ΔPPb shall be measured over the entire disk surface (from 22,0 to 58,6 mm for 120mm disk and to 38,6 mm for 80mm disk).

Copyright International Organization for Standardization
Provided by IHS under license with ISO
No reproduction or networking permitted without license from IHS
Not for Resale

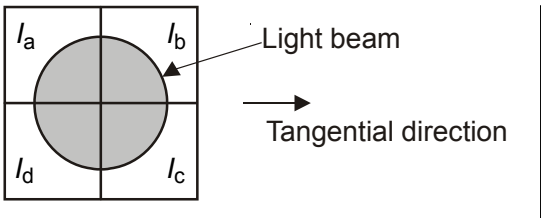

Figure 22 — Quadrant photo detector

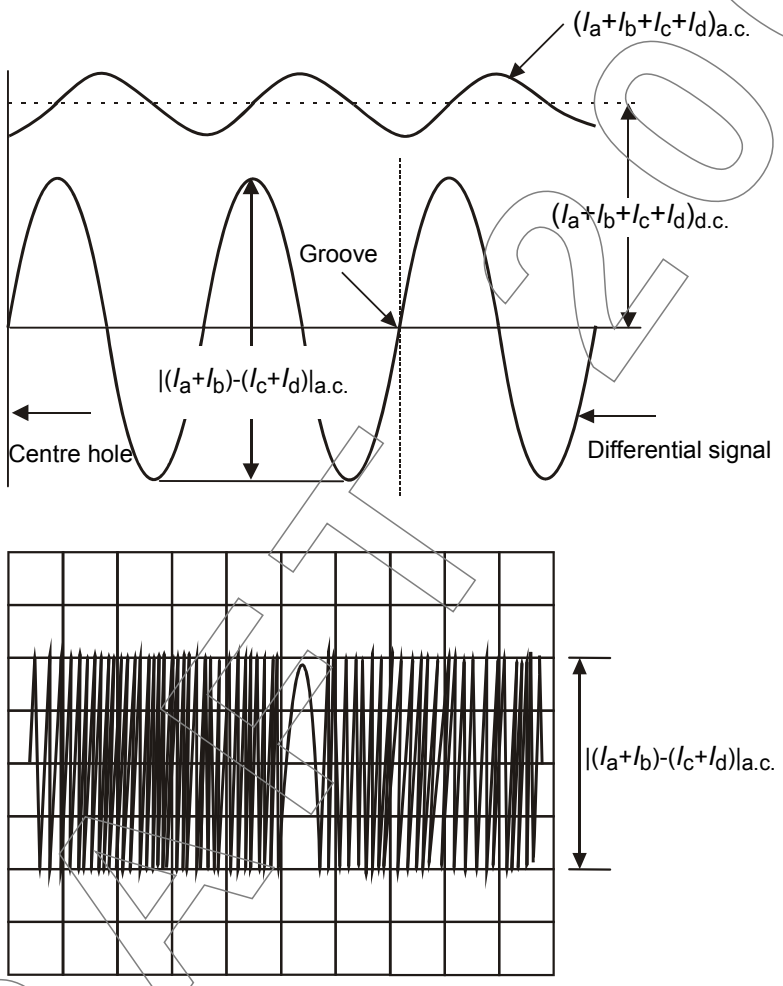

Figure 23 — Radial push-pull tracking error signal

14.4.2 Defects

The requirements shall be as specified in 13.4.3.

14.5 Addressing signals

The output currents of the four quadrants of the split photo detector are I_a, I_b, I_c and I_d as shown in Figure 22.

14.5.1 Land Pre-Pit signal

The Land Pre-Pit signal is derived from the instantaneous level of the differential output when the light beam is following a track and shall be $[(I_a + I_b) - (I_c + I_d)]$. This differential signal shall be measured by the PUH specified in 9.1.2 before and after recording.

The Land Pre-Pit signal amplitude before recording (LPPb) shall be defined as:

Copyright International Organization for Standardization
Provided by IHS under license with ISO
No reproduction or networking permitted without license from IHS
Not for Resale

LPPb = $|(I_a + I_b) - (I_c + I_d)|_{o\text{-}p}$ / $|(I_a + I_b + I_c + I_d)|_{d.c.}$. See Figure 23 and 24.

$|(I_a + I_b) - (I_c + I_d)|_{o\text{-}p}$ shall be measured at the average point of maximum and minimum signals and the bandwidth of the photo-detector amplifiers shall be higher than 20 MHz.

$|(I_a + I_b + I_c + I_d)|_{d.c.}$ shall be measured when the light beam is following a track and shall be low pass filtered with a cut-off frequency of 30 kHz.

The aperture ratio of the Land Pre-Pit after recording (AR) shall be defined as:

AR=APmin. / APmax.

APmin. and APmax. are the minimum and the maximum values of the Land Pre-Pit signal amplitude AP = $|(I_a + I_b) - (I_c + I_d)|$ without the wobble amplitude.

See Figure 24 and Annex N.

The above parameters shall meet the following requirements.

- Signal amplitude before recording : 0,18 < LPPb < 0,27
- Aperture ratio after recording : AR > 10 %
- Block error ratio before recording : BLERb < 3 %
- Block error ratio after recording : BLERa < 5 %

The Half Maximum Full Width of LPPb signal shall be larger than 1T.

The Land Pre-Pit on the outer side of the track shall be detected when the laser beam is following the track.

For the measurement of the Block error ratio of the Land Pre-Pit data, the parity A errors before error correction shall be measured over 1000 ECC Blocks.

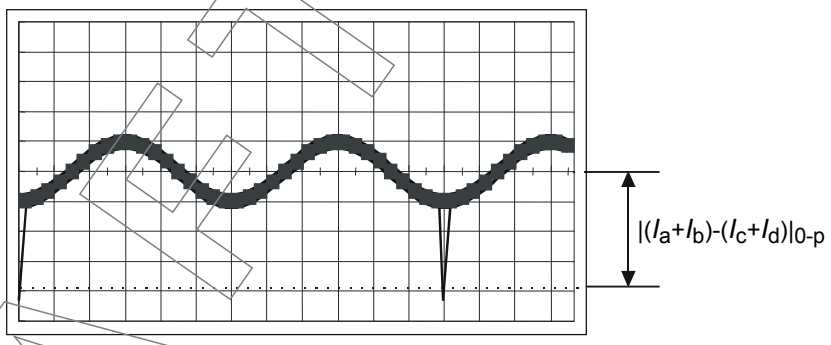

(a) Before recording for measuring LPPb

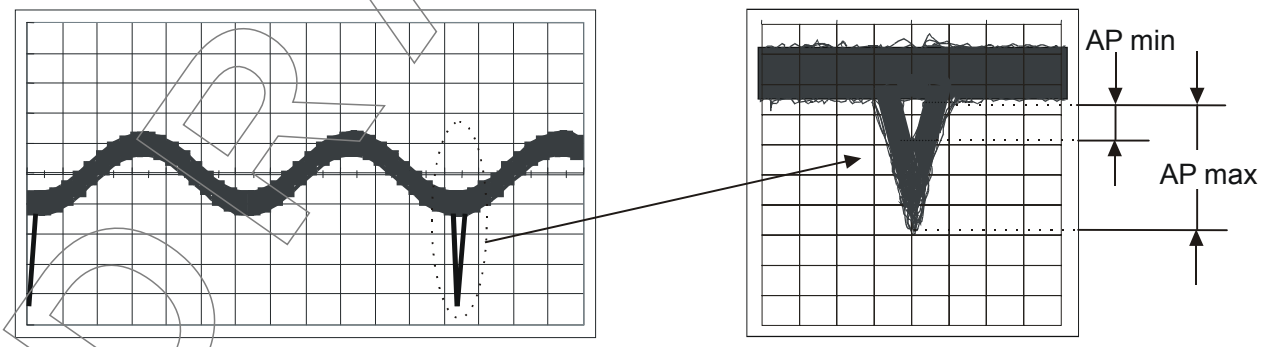

(b) After recording for measuring AR

Figure 24 — Land Pre-Pit signal

Copyright International Organization for Standardization
Provided by IHS under license with ISO
No reproduction or networking permitted without license from IHS
Not for Resale

14.5.2 Groove wobble signal

The groove wobble signal is derived from the differential output when the light beam is following a track, and is $[(I_a + I_b) - (I_c + I_d)]$. The groove wobble signal shall be measured by the PUH specified in 9.1.2 before and after recording.

The groove wobble signal amplitudes before recording (WOb) and after recording (WOa) are defined as:

WOb, WOa = $[(I_a + I_b) - (I_c + I_d)]_{p-p}$

The above parameters shall meet the following requirements.

The locking frequency for the groove wobble shall be 8 times the SYNC Frame frequency.

See clause 22.

CNR of WOb shall be greater than 35 dB (RBW = 1 kHz)

CNR of WOa shall be greater than 31 dB (RBW = 1 kHz)

The CNR of WOb and WOa shall be measured for the average value using a spectrum analyser where the Resolution Bandwidth (RBW) setting is 1 kHz, see Figure 25.

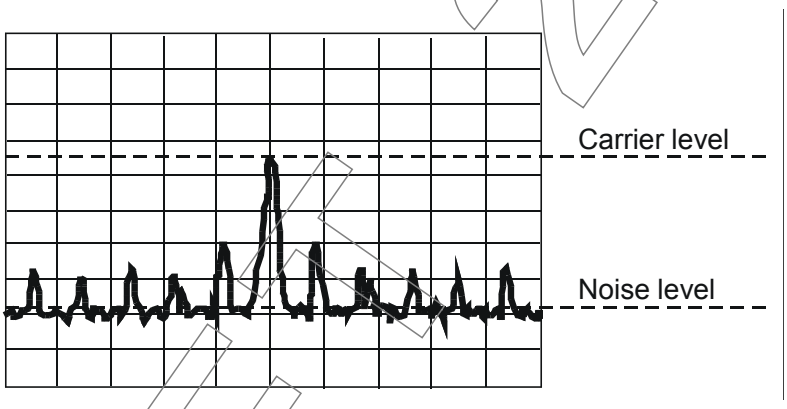

Figure 25 — Measurement of the wobble CNR

The normalized Wobble signal (NWO) is defined to derive the wobble amplitude in nanometres.

NWO = WOb / RPS and its value shall be 0,08 < NWO < 0,14 where RPS is the peak to peak value of the radial push-pull signal $[(I_a + I_b) - (I_c + I_d)]$ before recording, when the light spot crosses the tracks and is low pass filtered with a cut-off frequency 30 kHz.

14.5.3 Relation in phase between wobble and Land Pre-Pit

The groove wobble signal and Land Pre-Pit signal are derived from the differential output currents $[(I_a + I_b) - (I_c + I_d)]$. Therefore, when the photo detector elements (I_a, I_b) are located at the outer side of the disk and groove wobble is regarded as a sine wave, the relation in phase between groove wobble and Land Pre-Pit (PWP) shall meet the following requirement.

PWP = -90° ± 10°

The PWP value shall be measured as the phase difference between the largest amplitude point of the LPP signal and the averaged zero crossing point of the wobble, see Figure 26.

The PWP value shall be measured before recording.

DRAFT 2005

--`,,```,,,,````-`-`,,`,,`,`,,`---

Copyright International Organization for Standardization
Provided by IHS under license with ISO
No reproduction or networking permitted without license from IHS
Not for Resale

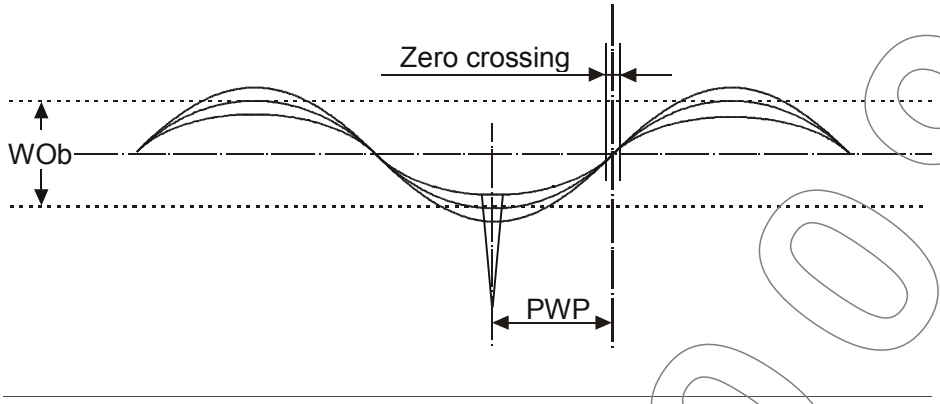

Figure 26 — Relation in phase between wobble and Land Pre-Pit

15 Operational signals for Embossed Zone

15.1 Operational signals from the Control data blocks

The operational signals from the Control data blocks in the embossed Control data zone and the embossed data in the Buffer zone 1 shall satisfy the requirements specified in clause 13 and the additional characteristics specified in this clause. See 26.1.6.

15.1.1 Measurement conditions

See 13.1.

15.1.2 Read conditions

See 13.2.

15.1.3 High frequency (HF) signals

See 13.3.

15.1.4 Quality of signals

See 13.4.

15.1.5 Servo signals

See 13.5.

Consistent tracking shall be secured when the laser beam is crossing the boundaries between Buffer zone 1, Control data blocks, Servo blocks, and Extra Border Zone.

15.1.5.1 Differential phase tracking error signal

See 13.5.1.

15.1.5.2 Tangential push-pull signal

See 13.5.2.

15.1.5.3 Radial push-pull tracking error signal

The radial push-pull signal shall be derived from the differential output of the detector elements $(I_a + I_b) - (I_c + I_d)$, when the light beam crosses the tracks.

This tracking error signal shall be measured with the PUH for recording specified in 9.1.2, and shall be low pass filtered with a cut-off frequency of 30 kHz.

The radial push-pull amplitude in the Control data blocks of the embossed Control data zone (PPe1) is defined as:

$$PPe1 = |(I_a + I_b) - (I_c + I_d)|_{a.c.} / |(I_a + I_b + I_c + I_d)|_{d.c.}$$

$|(I_a + I_b + I_c + I_d)|_{d.c}$ shall be measured from zero level to the average level of

--`,,```,,,,````-`-`,,`,,`,`,,`---

Copyright International Organization for Standardization
Provided by IHS under license with ISO
No reproduction or networking permitted without license from IHS
Not for Resale

DRAFT 2009

$|(I_a + I_b + I_c + I_d)|_{a.c.}$, after low pass filtering with a cut-off frequency of 30 kHz when the light beam crosses the tracks, see Figure 27.

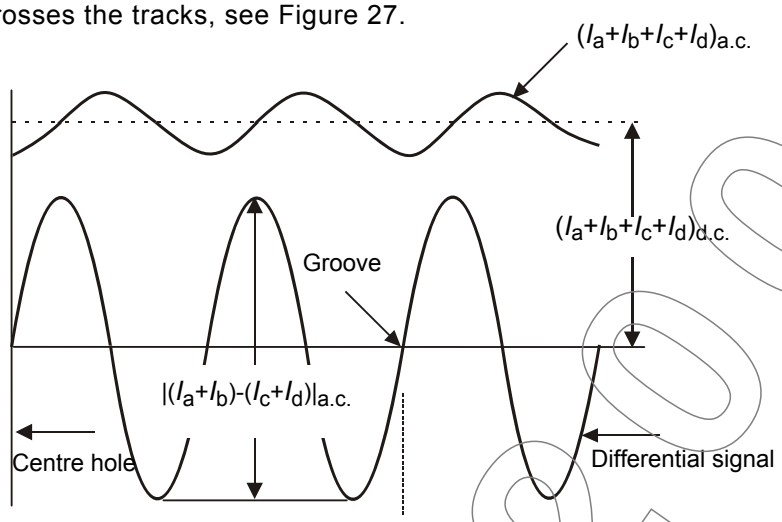

Figure 27 — Radial push-pull tracking error signal

The Embossed Push Pull ratio (EPPr1) is defined as:

$$EPPr1 = 20 \times \log_{10}(PPe1/PPb)$$

PPb shall be the radial push-pull amplitude before recording in groove as specified in 14.4.1.

PPb shall be measured at around 50,0 mm in diameter of a disk in order to calculate EPPr1 value.

The Eppr1 shall satisfy the following specification.

Embossed Push Pull ratio: $|EPPr1| \leq 3$ dB

15.1.6 Groove wobble signal

The groove wobble signal amplitude in the Control data blocks of the embossed Control data zone (WOe1) is defined as:

$$WOe1 = [(I_a + I_b) - (I_c + I_d)]\ pp$$

The above parameter shall meet the following requirements.

The locking frequency for the groove wobble shall be 8 times the SYNC Frame frequency.

CNR of WOe1 shall be greater than 31 dB (RBW = 1 kHz).

See 13.6.

This signal shall be measured with both of the PUH for playback in 9.1.1 and for recording in 9.1.2.

15.2 Operational signals from the Servo Blocks

The operational signals from the Servo blocks in the embossed Control data zone shall satisfy the following requirements. See 26.1.6.

15.2.1 Measurement conditions

See 14.1.

15.2.2 Read conditions

The power of the read spot shall not exceed 0,7 mW (continuous wave).

15.2.3 Servo signals

See 14.4.

Copyright International Organization for Standardization
Provided by IHS under license with ISO
No reproduction or networking permitted without license from IHS
Not for Resale

Consistent tracking shall be secured when the laser beam is crossing the boundaries between Buffer zone 1, Control data blocks, Servo blocks, and Extra Border Zone.

15.2.3.1 Radial push-pull tracking error signal

The radial push-pull amplitude in the Servo blocks of the embossed Control data zone (PPe2) is defined as:

$$PPe2 = \left|(I_a + I_b) - (I_c + I_d)\right|_{a.c.} / \left|(I_a + I_b + I_c + I_d)\right|_{d.c.}$$

(see Figure 27).

The embossed push-pull ratio (EPPr2) is defined as:

$$EPPr2 = 20 \times \log_{10} (PPe2 / PPb).$$

PPb shall be the radial push-pull amplitude before recording in groove as specified in 14.4.1.

PPb shall be measured at around 50,0 mm in diameter of a disk in order to calculate EPPr2 value.

The EPPr2 shall meet the following specification.

Embossed Push Pull ratio: $|EPPr2| \leq 3$ dB

The measuring conditions shall be as specified in 14.4.1.

15.2.3.2 Differential phase tracking signal

The signal shall be as specified in 13.5.1 and measured with the PUH for playback specified in 9.1.1.

15.2.4 Addressing signals

See 14.5.

15.2.4.1 Land Pre-Pit signal

The aperture ratio of the Land Pre-Pit signal in the Servo blocks of the embossed Control data zone (ARe) is defined as:

$$ARe = APmin. / APmax.$$

The Land Pre-pit signal in the Servo blocks of the embossed Control data zone shall meet the following requirements.

Aperture ratio: ARe > 30%

Block error ratio: BLERe ≤ 3%

The measuring conditions shall be as specified in 14.5.1.

For the measurement of the Block error ratio of the Land Pre-Pit data, the parity A errors before error correction shall be measured over 100 ECC Blocks including the groove area before recording.

15.2.4.2 Groove wobble signal

The groove wobble signal amplitude in the Servo blocks of the embossed Control data zone (WOe2) is defined as:

$$WOe2 = [(I_a + I_b) - (I_c + I_d)]\ pp.$$

The above parameters shall meet the following requirements.

The locking frequency for the groove wobble shall be 8 times the SYNC Frame frequency.

CNR of WOe2 shall be greater than 31 dB (RBW = 1 kHz)

The measuring conditions shall be as specified in 14.5.2.

This signal shall be measured with both of the PUH for playback in 9.1.1 and for recording in 9.1.2.

Copyright International Organization for Standardization
Provided by IHS under license with ISO
No reproduction or networking permitted without license from IHS
Not for Resale

Section 4 — Data format

16 General

The data received from the host, called Main Data, is formatted in a number of steps before being recorded on the disk. It is transformed successively into

- a Data Frame,
- a Scrambled Frame,
- an ECC Block,
- a Recording Frame,
- a Physical Sector.

These steps are specified in the following clauses.

17 Data Frames

A Data Frame shall consist of 2 064 bytes arranged in an array of 12 rows each containing 172 bytes, see Figure 28. The first row shall start with three fields, called Identification Data (ID), the check bytes of ID Error Detection Code (IED), and RSV, followed by 160 Main Data bytes. The next 10 rows shall each contain 172 Main Data bytes and the last row shall contain 168 Main Data bytes followed by four check bytes of Error Detection Code (EDC). The 2 048 Main Data bytes are identified as D_0 to $D_{2\,047}$.

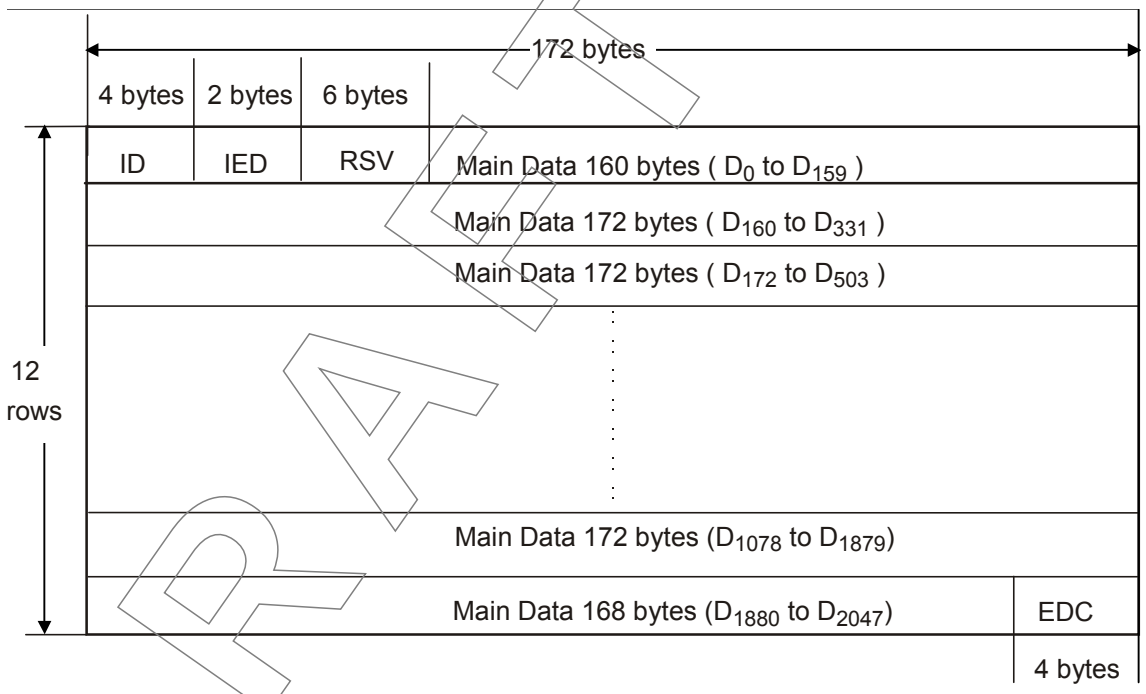

Figure 28 — Data Frame

17.1 Identification Data (ID)

This field shall consist of four bytes. Within these bytes the bits shall be numbered consecutively from b_0 (lsb) to b_{31} (msb), see Figure 29.

DRAFT 2009

Copyright International Organization for Standardization
Provided by IHS under license with ISO
No reproduction or networking permitted without license from IHS
Not for Resale

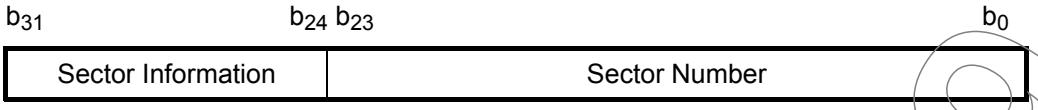

Figure 29 — Identification Data (ID)

b31	b30	b29	b28	b27 and b26	b25	b24
Sector Format type	Tracking method	Reflectivity	Reserved	Zone type	Data type	Layer number

Figure 30 — Sector Information of the Identification Data (ID)

The least significant three bytes, bits b_0 to b_{23}, shall specify the sector number in binary notation. The sector number of the first sector of an ECC Block of 16 sectors shall be a multiple of 16.

The bits of the most significant byte shown in Figure 30, the Sector Information, shall be set as follows.

a) Sector format type bit b_{31} shall be set to ZERO, indicating the CLV format type.

b) Tracking method bit b_{30} shall be set to ZERO, indicating Differential Phase tracking.

c) Reflectivity bit b_{29} shall be set to ONE, indicating the reflectivity is less than or equal to 40%, measured with PBS PUH.

d) Reserved bit b_{28} shall be set to ZERO.

e) Zone type bit b_{27} and bit b_{26}
shall be set to ZERO ZERO in the Data Zone.
shall be set to ZERO ONE in the Lead-in Zone.
shall be set to ONE ZERO in the Lead-out Zone.
shall be set to ONE ONE in the Middle Zone.

f) Data type bit b_{25}
shall be set to ZERO, indicating Re-recordable data
shall be set to ONE, indicating Linking data (see clause 24) or Intermediate marker (see See Annex M).

g) Layer number bit b_{24}
shall be set to ZERO, indicating Layer 0.
shall be set to ONE, indicating Layer 1.

Other settings are prohibited by this Ecma Standard.

17.2 ID Error Detection Code

When identifying all bytes of the array shown in Figure 28 as $C_{i,j}$ for i = 0 to 11 and j = 0 to 171, the check bytes for ID Error Detection code (IED) are represented by $C_{0,j}$ for j = 4 to 5. Their setting shall be obtained as follows.

$$\mathrm{IED}(x) = \sum_{j=4}^{5} C_{0,j}\, x^{5-j} = \mathrm{I}(x)\, x^2 \bmod G_E(x)$$

where

$$\mathrm{I}(x) = \sum_{j=0}^{3} C_{0,,j}\, x^{3-j}$$

$$G_E(x) = \prod_{k=0}^{1} (x + \alpha^k)$$

DRAFT

Copyright International Organization for Standardization
Provided by IHS under license with ISO
No reproduction or networking permitted without license from IHS
Not for Resale

α represents the primitive root of the primitive polynomial

$P(x) = x^8 + x^4 + x^3 + x^2 + 1$

17.3 RSV

This field shall consist of 6 bytes. Their setting is application dependent, for instance a video application. If this setting is not specified by the application, the default setting shall be all ZEROs.

17.4 Error Detection Code

This field shall contain four check bytes of Error Detection Code (EDC) computed over the preceding 2 060 bytes of the Data Frame. Considering the Data Frame as a single bit field starting with the most significant bit of the first byte of the ID field and ending with the least significant bit of the EDC field, then this msb will be $b_{16\,511}$ and the lsb will be b_0. Each bit b_i of the EDC shall be as follows for i = 31 to 0:

$$EDC(x) = \sum_{i=31}^{0} b_i x^i = I(x) \mod G(x)$$

where:

$$I(x) = \sum_{i=16\,511}^{32} b_i x^i$$

$$G(x) = x^{32} + x^{31} + x^4 + 1.$$

18 Scrambled Frames

The 2 048 Main Data bytes shall be scrambled by means of the circuit shown in Figure 31 which shall consist of a feedback bit shift register in which bits r_7 (msb) to r_0 (lsb) represent a scrambling byte at each 8-bit shift. At the beginning of the scrambling procedure of a Data Frame, positions r_{14} to r_0 shall be pre-set to the value(s) specified in Table 3. The same pre-set value shall be used for 16 consecutive Data Frames. After 16 groups of 16 Data Frames, the sequence is repeated. The initial pre-set number is equal to the value represented by bits b_7 (msb) to bit b_4 (lsb) of the ID field of the Data Frame. Table 3 specifies the initial pre-set value of the shift register corresponding to the 16 initial pre-set numbers.

Table 3 — Initial value of shift register

Initial pre-set number	Initial value	Initial pre-set number	Initial value
(0)	(0001)	(8)	(0010)
(1)	(5500)	(9)	(5000)
(2)	(0002)	(A)	(0020)
(3)	(2A00)	(B)	(2001)
(4)	(0004)	(C)	(0040)
(5)	(5400)	(D)	(4002)
(6)	(0008)	(E)	(0080)
(7)	(2800)	(F)	(0005)

DRAFT 2009

Copyright International Organization for Standardization
Provided by IHS under license with ISO
No reproduction or networking permitted without license from IHS
Not for Resale

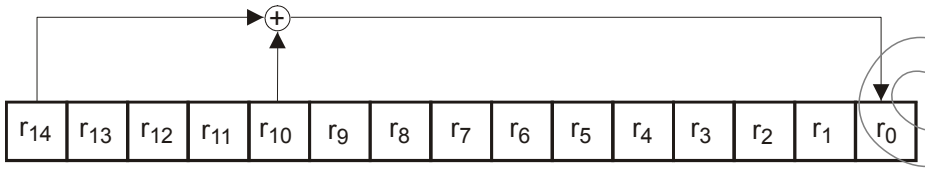

Figure 31 — Feedback shift register for generating scramble data

The part of the initial value of r_7 to r_0 is taken out as scrambling byte S_0. After that, 8-bit shift is repeated 2 047 times and the following 2 047 bytes shall be taken from r_7 to r_0 as scrambling bytes S_1 to S_{2047}. The Main Data bytes D_k of the Data Frame become scrambled bytes D'_k where

$D'_k = D_k \oplus S_k$ for k = 0 to 2 047

$\oplus$ stands for Exclusive OR.

19 ECC Block configuration

An ECC Block is formed by arranging 16 consecutive Scrambled Frames in an array of 192 rows of 172 bytes each, see Figure 32. To each of the 172 columns, 16 bytes of Parity of Outer Code are added, then, to each of the resulting 208 rows, 10 byte of Parity of Inner Code are added. Thus a complete ECC Block comprises 208 rows of 182 bytes each. The bytes of this array are identified as $B_{i,j}$ as follows, where i is the row number and j the column number.

$B_{i,j}$ for i = 0 to 191 and j = 0 to 171 are bytes from the Scrambled Frames

$B_{i,j}$ for i = 192 to 207 and j = 0 to 171 are bytes of the Parity of Outer Code

$B_{i,j}$ for i = 0 to 207 and j = 172 to 181 are bytes of the Parity of Inner Code

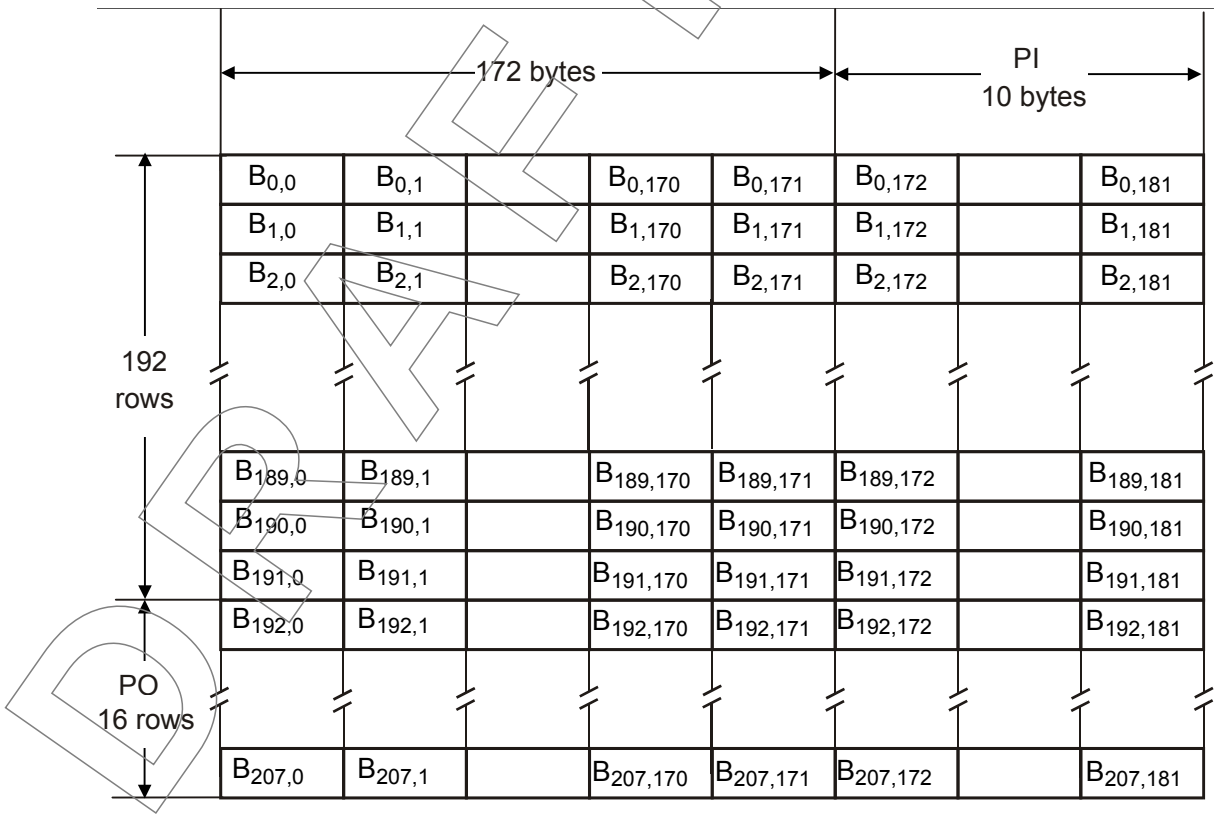

Figure 32 — ECC Block

Copyright International Organization for Standardization
Provided by IHS under license with ISO
No reproduction or networking permitted without license from IHS
Not for Resale

The PO and PI bytes shall be obtained as follows.

In each of columns j = 0 to 171, the 16 PO bytes are defined by the remainder polynomial $R_j(x)$ to form the outer code RS (208,192,17).

$$R_j(x) = \sum_{i=192}^{207} B_{i,,j}\, x^{207-i} = I_j(x)\, x^{16} \bmod G_{PO}(x)$$

where:

$$I_j(x) = \sum_{i=0}^{191} B_{i,,j}\, x^{191-i}$$

$$G_{PO}(x) = \prod_{k=0}^{15} (x + \alpha^k)$$

In each of rows i = 0 to 207, the 10 PI bytes are defined by the remainder polynomial $R_i(x)$ to form the inner code RS (182,172,11).

$$R_i(x) = \sum_{j=172}^{181} B_{i,,j}\, x^{181-j} = I_i(x)\, x^{10} \bmod G_{PI}(x)$$

where:

$$I_i(x) = \sum_{j=0}^{171} B_{i,j}\, x^{171-j}$$

$$G_{PI}(x) = \prod_{k=0}^{9} (x + \alpha^k)$$

α is the primitive root of the primitive polynomial $P(x) = x^8 + x^4 + x^3 + x^2 + 1$.

20 Recording Frames

Sixteen Recording Frames shall be obtained by interleaving one of the 16 PO rows at a time after every 12 rows of an ECC Block, see Figure 33. This is achieved by re-locating the bytes $B_{i,j}$ of the ECC Block as $B_{m,n}$ for

m = i + int [i / 12] and n = j for $i \leq 191$

m = 13 (i - 191) - 1 and n = j for i $\geq$ 192

where int [x] represents the largest integer not greater than x.

Thus the 37 856 bytes of an ECC Block are re-arranged into 16 Recording Frames of 2 366 bytes. Each Recording Frame consists of an array of 13 rows of 182 bytes.

DRAFT 2009

Copyright International Organization for Standardization
Provided by IHS under license with ISO
No reproduction or networking permitted without license from IHS
Not for Resale

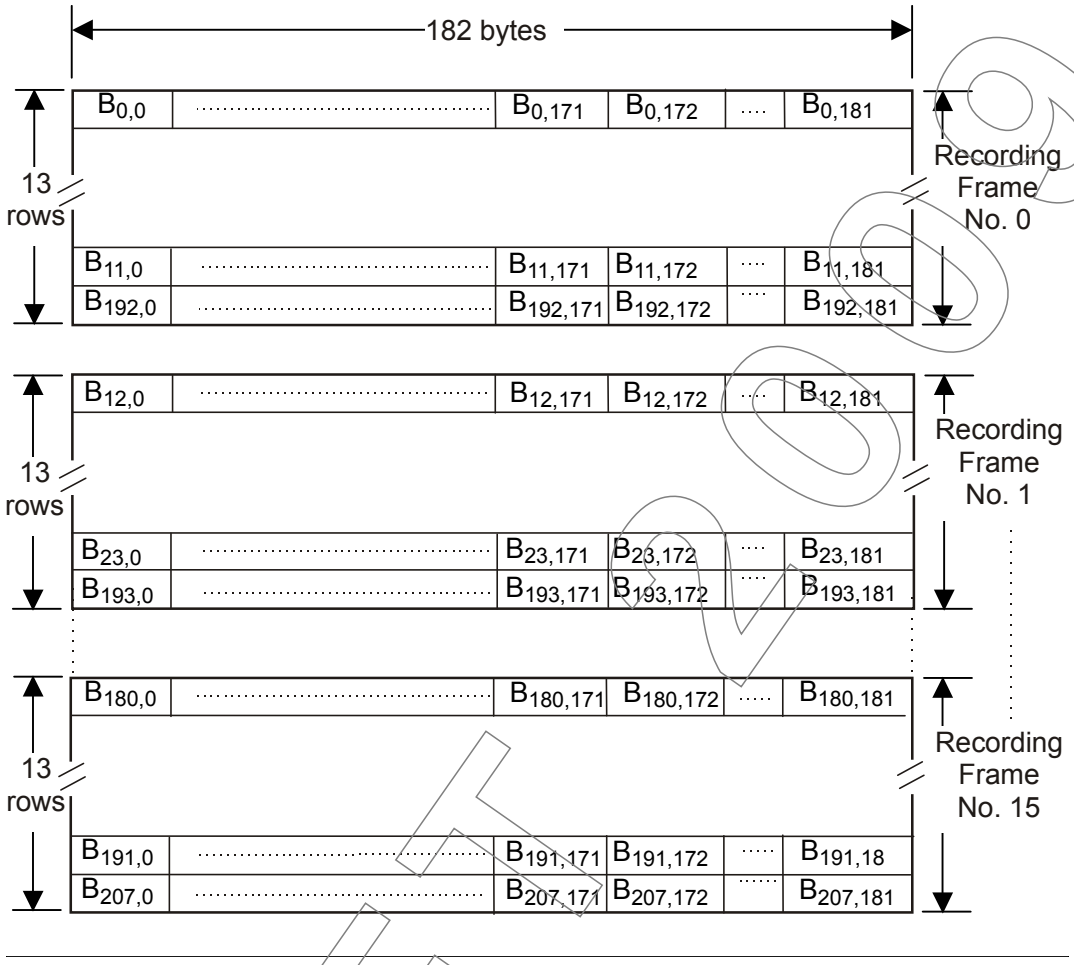

Figure 33 — Recording Frames obtained from an ECC Block

21 Modulation

The 8-bit bytes of each Recording Frame shall be transformed into 16-bit Code Words with the run length limitation that between 2 ONEs there shall be at least 2 ZEROs and at most 10 ZEROs (RLL 2,10). Annex G specifies the conversion Tables to be applied. The Main Conversion Table and the Substitution Table specify a 16-bit Code Word for each 8-bit bytes with one of 4 States. For each 8-bit byte, the Tables indicate the corresponding Code Word, as well as the State for the next 8-bit byte to be encoded.

The 16-bit Code Words shall be NRZI-converted into Channel bits before recording on the disk, see Figure 34.

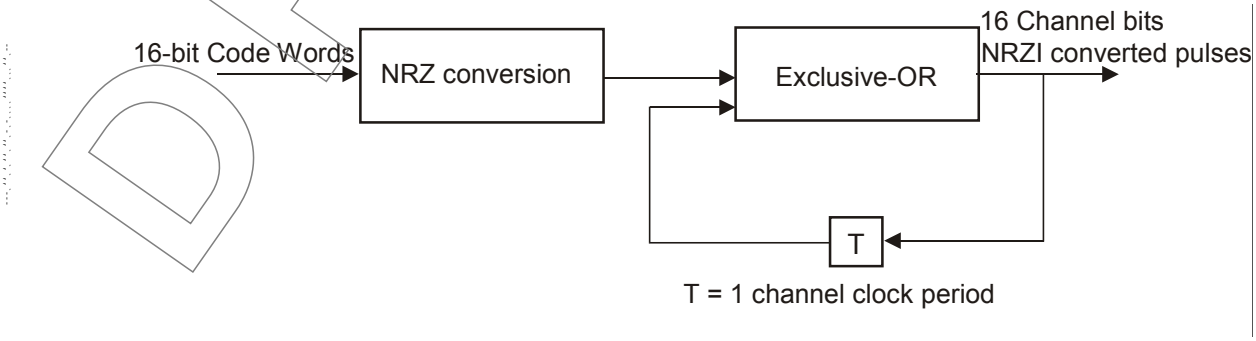

Figure 34 — NRZI conversion

Copyright International Organization for Standardization
Provided by IHS under license with ISO
No reproduction or networking permitted without license from IHS
Not for Resale

22 Physical Sectors

The structure of a Physical Sector is shown in Figure 35. It shall consist of 13 rows, each comprising two Sync Frames. A Sync Frame shall consist of a SYNC Code from Table 4 and 1 456 Channel bits representing the first, respectively the second 91 8-bit bytes of a row of a Recording Frame. The first row of the Recording Frame is represented by the first row of the Physical Sector, the second by the second, and so on.

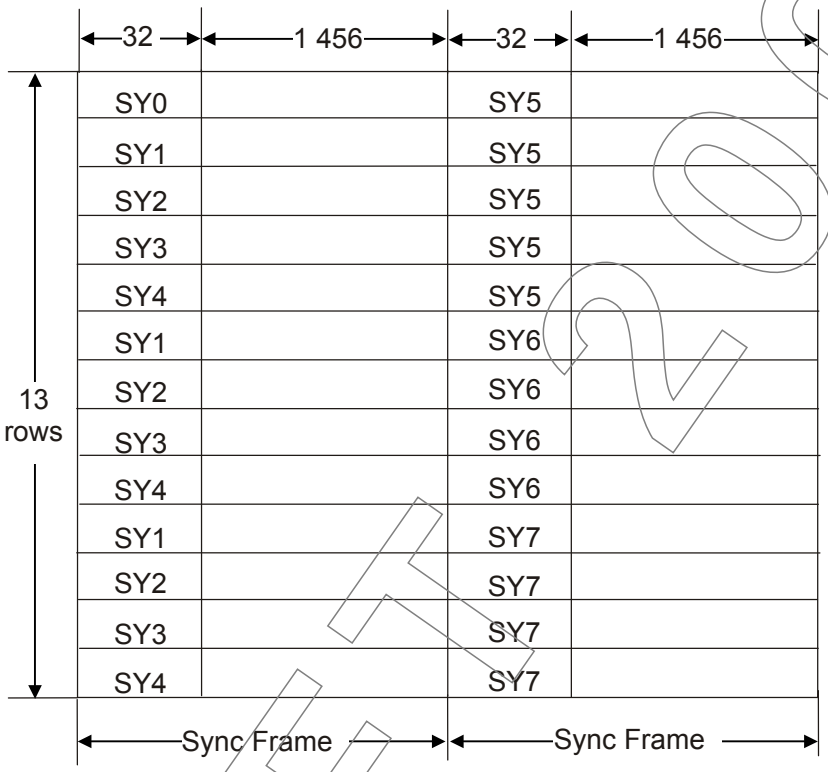

Figure 35 — Physical Sector

Recording shall start with the first Sync Frame of the first row, followed by the second Sync Frame of that row, and so on row-by-row.

DRAFT2000

Copyright International Organization for Standardization
Provided by IHS under license with ISO
No reproduction or networking permitted without license from IHS
Not for Resale

Table 4 — SYNC Codes

State 1 and State 2			
	Primary SYNC Codes		Secondary SYNC Codes
	(msb) (lsb)		(msb) (lsb)
SY0 =	0001001001000100 0000000000010001	/	0001001000000100 0000000000010001
SY1 =	0000010000000100 0000000000010001	/	0000010001000100 0000000000010001
SY2 =	0001000000000100 0000000000010001	/	0001000001000100 0000000000010001
SY3 =	0000100000000100 0000000000010001	/	0000100001000100 0000000000010001
SY4 =	0010000000000100 0000000000010001	/	0010000001000100 0000000000010001
SY5 =	0010001001000100 0000000000010001	/	0010001000000100 0000000000010001
SY6 =	0010010010000100 0000000000010001	/	0010000010000100 0000000000010001
SY7 =	0010010001000100 0000000000010001	/	0010010000000100 0000000000010001

State 3 and State 4			
	Primary SYNC Codes		Secondary SYNC Codes
	(msb) (lsb)		(msb) (lsb)
SY0 =	1001001000000100 0000000000010001	/	1001001001000100 0000000000010001
SY1 =	1000010001000100 0000000000010001	/	1000010000000100 0000000000010001
SY2 =	1001000001000100 0000000000010001	/	1001000000000100 0000000000010001
SY3 =	1000001001000100 0000000000010001	/	1000001000000100 0000000000010001
SY4 =	1000100001000100 0000000000010001	/	1000100000000100 0000000000010001
SY5 =	1000100100000100 0000000000010001	/	1000000100000100 0000000000010001
SY6 =	1001000010000100 0000000000010001	/	1000000001000100 0000000000010001
SY7 =	1000100010000100 0000000000010001	/	1000000010000100 0000000000010001

The Physical Sector is a sector after the modulation by 8/16 conversion which adds a SYNC Code to the head of every 91 bytes in the Recording Frame.

23 Suppress control of the d.c. component

To ensure a reliable radial tracking and a reliable detection of the HF signals, the low frequency content of the stream of Channel bit patterns should be kept as low as possible. In order to achieve this, the Digital Sum Value (DSV, see 4.10) shall be kept as low as possible. At the beginning of the modulation, the DSV shall be set to 0.

The different ways of diminishing the current value of the DSV are as follows.

a) Choice of SYNC Codes between Primary or Secondary SYNC Codes.

b) For the 8-bit bytes in the range 0 to 87, the Substitution Table offers an alternative 16-bit Code Word for all States.

c) For the 8-bit bytes in the range 88 to 255, when the prescribed State is 1 or 4, then the 16-bit Code Word can be chosen either from State 1 or from State 4, so as to ensure that the RLL requirement is met.

In order to use these possibilities, two data streams, Stream 1 and Stream 2, are generated for each Sync Frame. Stream 1 shall start with the Primary SYNC Code and Stream 2 with the Secondary

Copyright International Organization for Standardization
Provided by IHS under license with ISO
No reproduction or networking permitted without license from IHS
Not for Resale

SYNC Code of the same category of SYNC Codes. As both streams are modulated individually, they generate a different DSV because of the difference between the bit patterns of the Primary and Secondary SYNC Codes.

In the cases b) and c), there are two possibilities to represent an 8-bit byte. The DSV of each stream is computed up to the 8-bit byte preceding the 8-bit byte for which there is this choice. The stream with the lowest |DSV| is selected and duplicated to the other stream. Then, one of the representations of the next 8-bit byte is entered into Stream 1 and the other into Stream 2. This operation is repeated each time case b) or c) occurs.

Whilst case b) always occurs at the same pattern position in both streams, case c) may occur in one of the streams and not in the other because, for instance, the next State prescribed by the previous 8-bit byte can be 2 or 3 instead of 1 or 4. In that case the following 3-step procedure shall be applied.

1) Compare the |DSV|s of both streams.

2) If the |DSV| of the stream in which case c) occurs is smaller than that of the other stream, then the stream in which case c) has occurred is chosen and duplicated to the other stream. One of the representations of the next 8-bit byte is entered into this stream and the other into the other stream.

3) If the |DSV| of the stream in which case c) has occurred is larger than that of the other stream, then case c) is ignored and the 8-bit byte is represented according to the prescribed State.

In both cases b) and c), if the |DSV|s are equal, the decision to choose Stream 1 or Stream 2 is implementation-defined.

The procedure for case a) shall be as follows. At the end of a Sync Frame, whether or not case b) and or case c) have occurred, the DSV of the whole Sync Frame is computed and the stream with the lower |DSV| is selected. If this DSV is greater than + 63 or smaller than -64, then the SYNC Code at the beginning of the Sync Frame changed from Primary to Secondary or vice versa. If this yields a smaller |DSV|, the change is permanent, if the |DSV| is not smaller, the original SYNC Code is retained. During the DSV computation, the actual values of the DSV may vary between -1 000 and +1 000, thus it is recommended that the count range for the DSV be at least from -1 024 to +1 023.

24 Linking scheme

The linking scheme is specified for appending data in the Incremental recording mode. It consists of three types of linking methods named 2K-Link, 32K-Link and Lossless-Link.

24.1 Structure of linking

The appended data shall be recorded from or to the Linking sector, which is the first Physical Sector of the ECC Block and it contains the linking point.

On each linking operation, the data recording shall be terminated at the 16th byte in the first Sync Frame of the Linking sector and shall be started at the 15th to 17th byte in the first Sync Frame of Linking sector. When a disk is in the case of Figure 36 (b), Block SYNC Guard Area shall be located in the first ECC Block before linking and becomes a part of the Linking Loss Area after linking.

The ECC Block address of Layer 0 shall be continuously decreased from the inside to the outside of a disk, however, the ECC Block address of Layer 1 shall be continuously decreased from the outside to the inside of a disk.

24.2 2K-Link and 32K-Link

A Linking Loss Area shall be allocated in cases of 2K-Link and 32K-Link to prevent any degradation of the data reliability due to the influence of linking. It may contain padding sectors as shown in Figures 37 (2K-Link) and 38 (32K-Link) and shall have a minimum size of 2 048 bytes and 32 768 bytes respectively. All Main data in the Linking Loss Area shall be set to (00).

--`,,```,,,,````-`-`,,`,,`,`,,`---
Copyright International Organization for Standardization
Provided by IHS under license with ISO
No reproduction or networking permitted without license from IHS
Not for Resale

The Data type bit (see 17.1) of the sector followed by a sector belonging to the Linking Loss Area shall be set to ONE, but the Data type bit of the Linking sector is always set to ZERO. See Figure 37 and 38. The last recorded sector in each RZone shall be recorded by using 2K-Link or 32K-Link and its Data type bit shall be set to ONE.

24.3 Lossless-Link

The linking without Linking Loss Area, as shown in Figure 39, is allowed and referred to as Lossless-Link. There is no sector which has the Data type bit of ONE in this linking scheme.

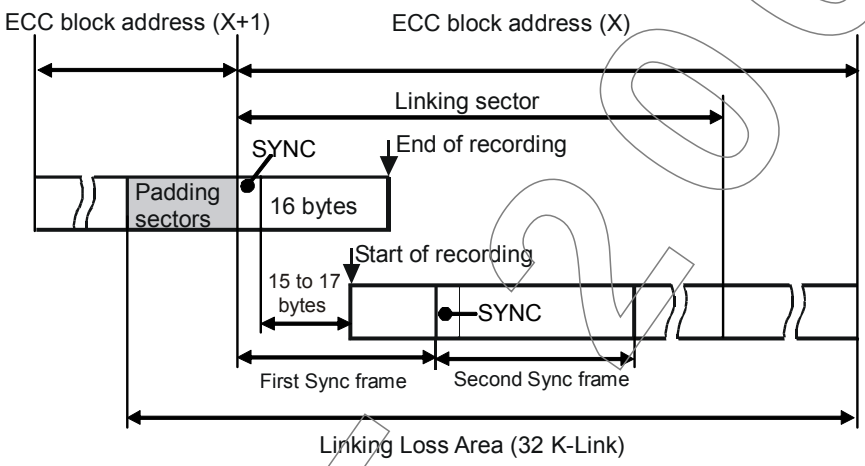

(a) Linking at just after the Recorded Area

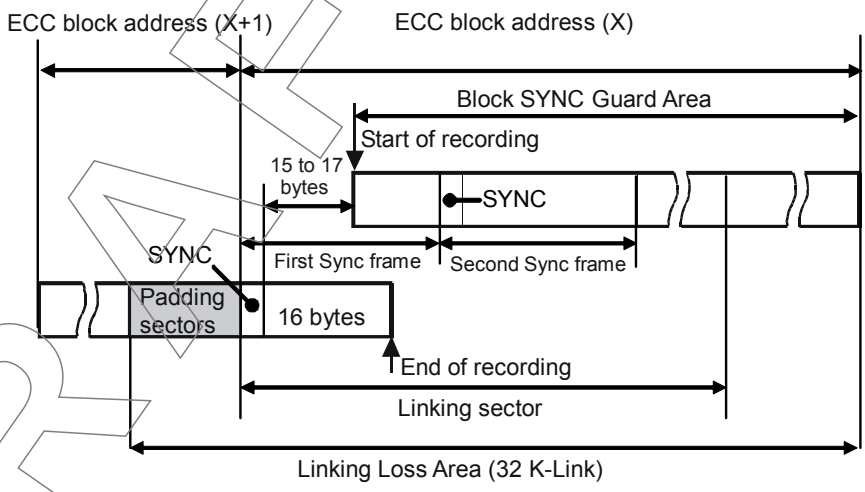

(b) Linking at just before the Recorded Area

Figure 36 — Structure of Linking

DRAFT 2009

Copyright International Organization for Standardization
Provided by IHS under license with ISO
No reproduction or networking permitted without license from IHS
Not for Resale

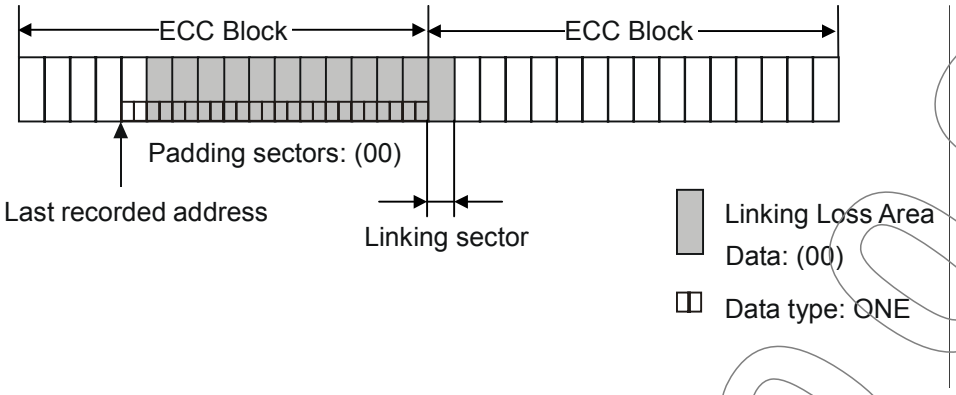

Figure 37 — Structure of ECC Block with Linking Loss Area of 2 048 bytes (2K-Link)

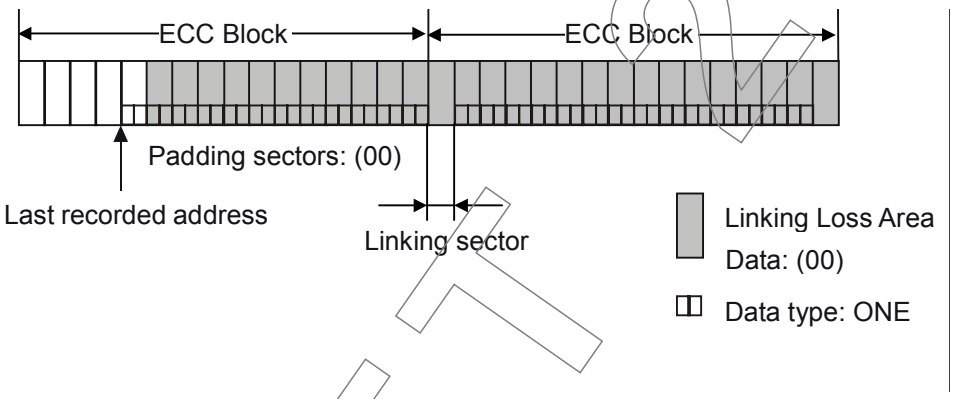

Figure 38 — Structure of ECC Block with Linking Loss Area of 32 768 bytes (32K-Link)

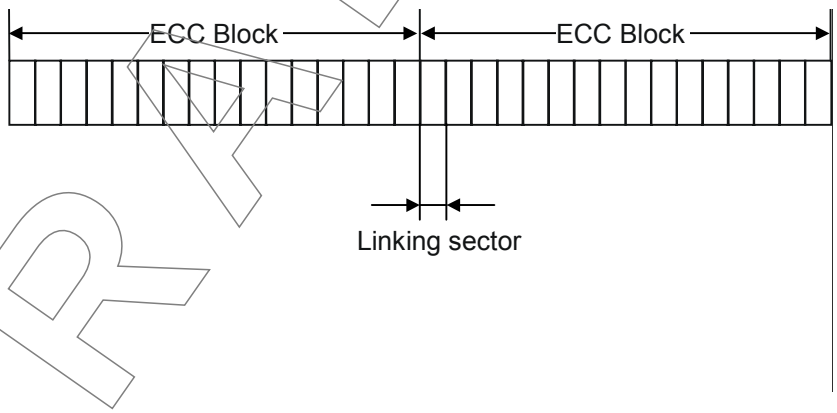

Figure 39 — Structure of ECC Block without Linking Loss Area (Lossless-Link)

DRAFT 2009

Copyright International Organization for Standardization
Provided by IHS under license with ISO
No reproduction or networking permitted without license from IHS
Not for Resale

Section 5 — Format of the Information Zone

25 General description of the Information Zone

The Information Zone extending over two layers shall be divided in four parts: the Lead-in Zone, the Data Zones, the Lead-out Zone and the Middle Zones. The Data Zones are intended for the recording of Main Data. The Lead-in Zone contains control information. The Lead-out Zone allows for a continuous smooth read-out. The Middle Zones facilitate layer jump at the end of the Data Zone on Layer 0 and allows for a continuous smooth read-out and read-in on each layer.

25.1 Layout of the Information Zone

The Information Zone on Layer 0 shall be sub-divided as shown in Table 5. The values of the radii indicated are nominal values for the first Physical Sector and the last track of the last Physical Sector of a zone.

The Information Zone on Layer 1 is also sub-divided according to the zone allocation on Layer 0 as shown in Table 6. Tracks are read from the outer side towards inner side of a disk on Layer 1.

Table 5 — Layout of the Information Zone on Layer 0

	Nominal radius in mm		Start Sector Number	Number of Physical Sectors
Lead-in Zone Initial Zone			(024440)	40384
Buffer Zone 0			(02E200)	512
R-Physical Format Information Zone			(02E400)	3 072
Reference Code Zone			(02F000)	32
Buffer Zone 1			(02F020)	480
Control Data Zone			(02F200)	3 072
Extra Border Zone			(02FE00)	512
Data Zone	24,0 to r_1		(030000)	
Middle Zone for 120 mm disk	r_1 to 35,0 min. when $r_1 < 34,6$	r_1 to (r_1 + 0,4) when $34,6 \leq r_1 \leq 58,1$		
Middle Zone for 80 mm disk	r_1 to 35,0 min. when $r_1 < 34,6$	r_1 to (r_1 + 0,4) when $34,6 \leq r_1 \leq 38,1$		

DRAFT 0.9

--`,,```,,,,````-`-`,,`,,`,`,,`---
Copyright International Organization for Standardization
Provided by IHS under license with ISO
No reproduction or networking permitted without license from IHS
Not for Resale

Table 6 — Layout of the Information Zone on Layer 1

	Nominal radius	Start Sector Number	End Sector Number
Lead-out Zone	Same inner radius as the Lead-in Zone on Layer 0 to r_2	End Sector number of the Data Zone + 1	(FD97DF)
Data Zone	r_2 to r_3	Bit inverted value to the last sector number of the Data Zone on Layer 0	Start Sector number of the Lead-out Zone -1
Middle Zone for 120mm and 80mm disks	r_3 to Same outer radius as Layer 0		Bit inverted value to the start sector number of the Middle Zone on Layer 0

25.2 Physical Sector numbering

Physical sectors on the track shall not possess any gap and shall be placed continuously from the beginning of the Lead-in Zone to the end of the Middle Zone, as well as from the beginning of the Middle Zone to the end of the Lead-out Zone.

The Physical sector numbers of Layer 0 shall continuously increase from the beginning of the Lead-in Zone to the end of the Middle Zone, however, the physical sector numbers of Layer 1 shall take the bit inverted value to that of Layer 0 and shall continuously increase from the beginning of the Middle Zone (outside) to the end of the Lead-out Zone (inside). The first sector number of the Data Zone on Layer 1 shall be the bit-inverted number of the last sector number in the Data Zone on Layer 0. The bit-inverted number shall be calculated so that the bit value of ONE becomes that of ZERO and vice versa.

Sectors on each layer with bit-inverted sector numbers to each other are at almost the same distance from the center of the disk.

The sector numbers shall be calculated by letting the sector number of the sector placed at the beginning of the Data Zone located after the Lead-in Zone be 196608 (030000). See Figure 40.

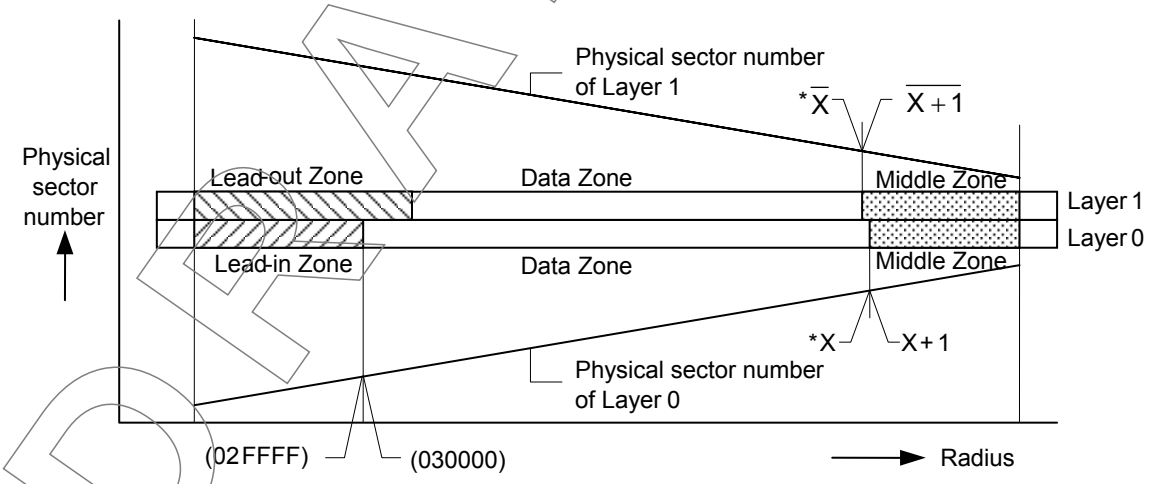

* The sector number $\overline{X}$ shall be calculated so that each bit value of X is inverted meaning ONE is replaced by ZERO and vice versa.
The sector number $\overline{X}$ shall be a multiple of 16.

Figure 40 — Physical Sector numbering

--`,,```,,,,````-`-`,,`,,`,`,,`---
Copyright International Organization for Standardization
Provided by IHS under license with ISO
No reproduction or networking permitted without license from IHS
Not for Resale

26 Lead-in Zone, Middle Zone and Lead-out Zone

26.1 Lead-in Zone

The Lead-in Zone is the innermost zone of the Information Zone on Layer 0. It shall consist of the following parts, see Figure 41.

- Initial Zone,
- Buffer Zone 0,
- RW-Physical Format Information Zone,
- Reference Code Zone,
- Buffer Zone 1,
- Control Data Zone,
- Extra Border Zone.

The Sector number of the first Physical Sector of each part is indicated in Figure 39 in hexadecimal notation.

Sector No.148 544	Initial Zone In all Physical Sectors the Main Data is set to (00)	Sector No.(024440) (Lead-in start)
Sector No.188 928	Buffer Zone 0 512 Physical Sectors with the Main Data set to (00)	Sector No.(02E200)
Sector No.189 440	RW-Physical Format Information Zone 3 072 Physical Sectors	Sector No.(02E400)
Sector No.192 512	Reference Code Zone 32 Physical Sectors	Sector No.(02F000)
Sector No.192 544	Buffer Zone 1 480 Physical Sectors with the Main Data set to (00)	Sector No.(02F020)
Sector No.193 024	Control Data Zone 3 072 Physical Sectors	Sector No.(02F200)
Sector No.196 096	Extra Border Zone 512 Physical Sectors	Sector No.(02FE00)
Sector No.196 608	Data Zone	Sector No.(030000)

Figure 41 — Lead-in Zone

26.1.1 Initial Zone

The Main Data of the Data Frames eventually recorded as Physical Sectors in the Initial Zone shall be set to (00).

26.1.2 Buffer Zone 0

This zone shall consist of 512 sectors from 32 ECC Blocks. The Main Data of the Data Frames eventually recorded as Physical Sectors in this zone shall be set to (00).

26.1.3 RW-Physical Format Information Zone

The RW-Physical format information zone shall consist of 192 ECC Blocks (3072 sectors) starting from Sector number (02E400).

The content of the 16 sectors of each RW-Physical format information block is repeated 192 times. The structure of an RW-Physical format information block shall be as shown in Figure 42.

DRAFT 2009

Copyright International Organization for Standardization
Provided by IHS under license with ISO
No reproduction or networking permitted without license from IHS
Not for Resale

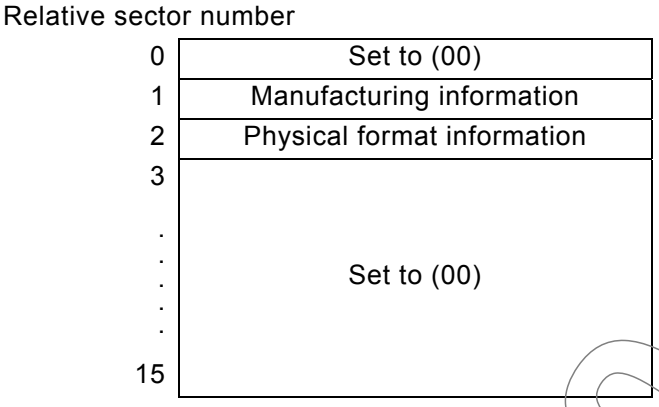

Figure 42 — Structure of a R-Physical format information block

26.1.3.1 Manufacturing information

This Ecma Standard does not specify the format and the content of these 2 048 bytes. Unless otherwise agreed to by the interchange parties, this content shall be ignored in interchange.

26.1.3.2 Physical format information

This information shall comprise the 2 048 bytes shown in Table 7 and described below.

The contents shall be copied from the Embossed Physical format information (see 26.1.6.1) except the DL indicator (BP0), the Maximum transfer rate of a disk (BP1), the Data Zone allocation (BP4 to 15), the Start sector number of the Middle Zone (BP32 to 39) and Pre-recorded/Embossed information code (BP40).

Table 7 — Physical format information

BP	Content	Number of bytes
0	Disk Category and DL indicator	1
1	Disk size and maximum transfer rate of the disk	1
2	Disk structure	1
3	Recorded density	1
4 to 15	Data Zone allocation	12
16	NBCA descriptor	1
17	Maximum recording speed	1
18	Minimum recording speed	1
19 to 25	Recording speed table	7
26	Class	1
27	Extended Version number	1
28 to 31	Set to (00)	4
32 to 39	Sector Number of the Middle Zone	8
40	Pre-recorded/Embossed information code	1
41 to 511	Set to (00)	471
512 to 2047	Extended embossed information	1536

Byte 0 – Disk Category and DL indicator

Bits b_0 to b_3 shall specify the DL indicator.

They shall be set to 1111, indicating this Ecma Standard.

Copyright International Organization for Standardization
Provided by IHS under license with ISO
No reproduction or networking permitted without license from IHS
Not for Resale

Other settings are prohibited by this Ecma Standard.

Bits b_4 to b_7 shall be copied from Embossed Physical format information. See 26.1.6.1.

Byte 1 – Disk size and maximum transfer rate of the disk

Bits b_0 to b_3 shall specify the Maximum transfer rate of the disk:

If set to 0000, they specify a maximum transfer rate of 2,52 Mbits/s.
If set to 0001, they specify a maximum transfer rate of 5,04 Mbits/s.
If set to 0010, they specify a maximum transfer rate of 10,08 Mbits/s.
If set to 1111, they do not specify a maximum transfer rate.

Other settings are prohibited by this Ecma Standard.

Bits b_4 to b_7 shall be copied from Embossed Physical format information. See 26.1.6.1.

Byte 2 – Disk structure

Bits b_0 to b_7 shall be copied from Embossed Physical format information. See 26.1.6.1.

Byte 3 – Recorded density

Bits b_0 to b_7 shall be copied from Embossed Physical format information. See 26.1.6.1.

Bytes 4 to 15 – Data Zone allocation

Byte 4 shall be set to (00).

Bytes 5 to 7 shall be set to (030000) to specify the Sector number 196 608 of the first Physical Sector of the Data Zone.

Byte 8 shall be set to (00).

Bytes 9 to 11 shall specify the Maximum recorded sector number of the Data Zone.

Bytes 12 shall be set to (00).

Bytes 13 to 15 shall specify the Maximum recorded sector number of the Data Zone on Layer 0.

This field specifies the maximum sector number of the recorded area that is recorded on the Data Recordable Zone excluding padding data area. The area considered as logically unrecorded area by the format operation is not included in the recorded area even if the area is in physically recorded state.

When the Data Recordable Zone on Layer 1 is not recorded, these bytes shall be same as the value of Bytes 9 to 11. When the Data Recordable Zone on Layer 1 is recorded, these bytes shall indicate the End sector number of Layer 0.

When the disk is in the Intermediate state, this field shall be set to (030000).

Other settings are prohibited by this Ecma Standard.

Byte 16 – NBCA descriptor

Bits b_0 to b_7 shall be copied from Embossed Physical format information. See 26.1.6.1.

Byte 17 – Maximum recording speed

Bits b_0 to b_7 shall be copied from Embossed Physical format information. See 26.1.6.1.

Byte 18 – Minimum recording speed

Bits b_0 to b_7 shall be copied from Embossed Physical format information. See 26.1.6.1.

DRAFT 2009

Copyright International Organization for Standardization
Provided by IHS under license with ISO
No reproduction or networking permitted without license from IHS
Not for Resale

Byte 19 to 25 – Recording speed table

Bits b_0 to b_7 shall be copied from Embossed Physical format information. See 26.1.6.1.

Byte 26 – Class

Bits b_0 to b_7 shall be copied from Embossed Physical format information. See 26.1.6.1.

Byte 27 – Extended Version number

Bits b_0 to b_7 shall be copied from Embossed Physical format information. See 26.1.6.1.

Bytes 28 to 31

These bytes shall be set to (00).

Bytes 32 to 39 – Sector Number of the Middle Zone

Byte 32 shall be set to (00).

Bytes 33 to 35 shall specify the Start sector number of the Middle Zone.

Bytes 33 to 35 in this field shall specify the Start sector number of the Middle Zone. The contents of this field shall be copied from the lower 3 bytes of the Start sector number of the Middle Zone (Bytes 86 to 89) in Format3 RMD Field0.

When the disk is in the Intermediate state, all bytes of this field shall be set to (00).

Byte 36 to 39 shall be set to (00).

Byte 40 – Pre-recorded/Embossed information code

Bits b_0 to b_7 shall be copied from Embossed Physical format information. See 26.1.6.1.

Bits b_0 to b_7 shall be copied from Pre-recorded/Embossed information code (BP 90) in Format3 RMD Field0. See 29.3.3.2.1.

Bytes 41 to 511

These bytes shall be set to (00).

Byte 512 to 2047 – Extended embossed information

Bits b_0 to b_7 shall be copied from Extended embossed information in Embossed Physical format information. See 26.1.6.1.

26.1.4 Reference Code Zone

The Reference Code Zone shall consist of the 32 Physical Sectors from two ECC Blocks which generate specific Channel bit patterns (3T-6T-7T) on the disk. This shall be achieved by setting to (AC) all 2 048 Main Data bytes of each corresponding Data Frame. Moreover, no scrambling shall be applied to these Data Frames, except to the first 160 Main Data bytes of the first Data Frame of each ECC Block.

26.1.5 Buffer Zone 1

This zone shall consist of 480 Physical Sectors from 30 ECC Blocks. The Main Data of the Data Frames eventually recorded as Physical Sectors in this zone shall be set to (00). The last ECC Block of Buffer Zone 1 shall be Block SYNC Guard Area. The Block SYNC Guard Area shall become a part of the Linking Loss Area after linking.

The embossed area shall start from the linking sector of the Block SYNC Guard Area. The linking scheme shall be applied for the recording of the Buffer Zone 1 to connect to the Control Data Zone.

26.1.6 Control Data Zone

The Control Data Zone shall comprise 192 ECC Blocks (3 072 sectors) starting from Sector number 193 024, (02 F200).

The control Data Zone shall be divided into 176 Control data blocks and 16 Servo blocks as shown in Figure 43.

--`,,```,,,,````-`-`,,`,,`,`,,`---

Copyright International Organization for Standardization
Provided by IHS under license with ISO
No reproduction or networking permitted without license from IHS
Not for Resale

DRAFT 2009

Each ECC Block of the Control Data Zone shall be embossed.

The structure of a Control data block and Servo block shall be as shown in Figure 44 and 45 respectively.

The first and second sectors in each Control data block shall contain the Embossed Physical format information and the Disk manufacturing information respectively, and the contents of the Embossed Physical format information shall be repeated 176 times.

The contents of all Servo blocks shall be reserved for Disk manufacturer specific.

The Servo blocks shall be used for servo control of disk drives. See 15.2.

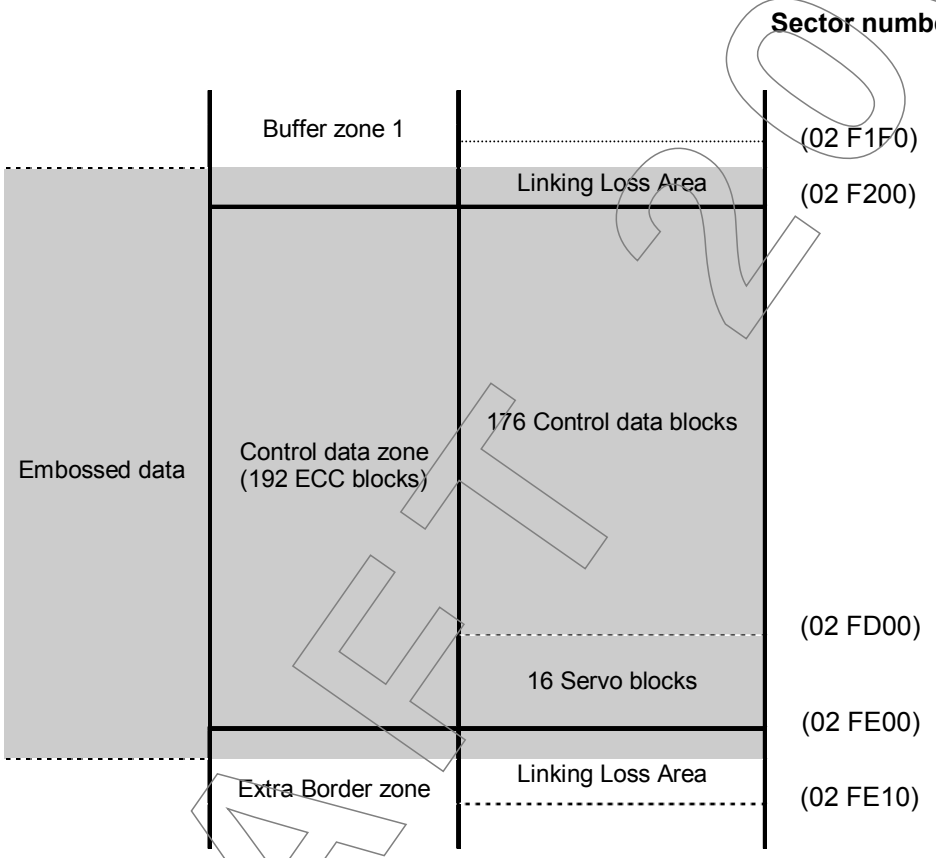

Figure 43 — Structure of a Control data Zone

DRAFT 2009

Copyright International Organization for Standardization
Provided by IHS under license with ISO
No reproduction or networking permitted without license from IHS
Not for Resale

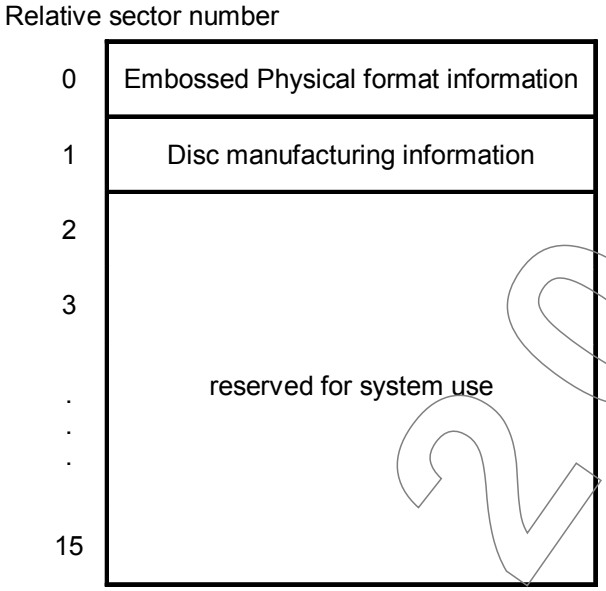

Figure 44 — Structure of a Control data block

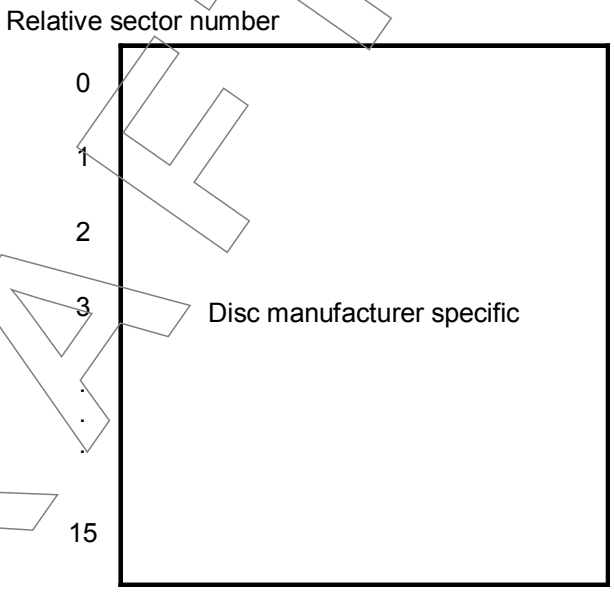

Figure 45 — Structure of a Servo block

DRAFT 2009

Copyright International Organization for Standardization
Provided by IHS under license with ISO
No reproduction or networking permitted without license from IHS
Not for Resale

26.1.6.1 Embossed Physical format information

This information shall comprise the 2 048 bytes shown in Table 8 and described below.

Table 8 — Embossed Physical format information

BP	Content	Number of bytes
0	Disk Category and Compatible Version Number	1
1	Disk size and maximum transfer rate of the disk	1
2	Disk structure	1
3	Recorded density	1
4 to 15	Data Zone allocation	12
16	NBCA descriptor	1
17	Maximum recording speed	1
18	Minimum recording speed	1
19 to 25	Recording speed table	7
26	Class	1
27	Extended Version number	1
28 to 31	Set to (00)	4
32 to 39	Sector Number of the first sector of the Extra Border Zone	8
40	Pre-recorded/Embossed information code	1
41 to 511	Set to (00)	471
512 to 2047	Extended embossed information	1536

Byte 0 – Disk Category and Compatible Version Number

Bits b_0 to b_3 shall specify the Version Number.

They shall be set to 0011, indicating this Ecma Standard.

Bits b_4 to b_7 shall specify the Disk Category.

These bits shall be set to 0011, indicating a Recordable disk.

Other settings are prohibited by this Ecma Standard.

Byte 1 – Disk size and maximum transfer rate of the disk

Bits b_0 to b_3 shall specify the Maximum transfer rate of the disk.

They shall be set to 1111, indicating not specified.

Bits b_4 to b_7 shall specify the Disk size:

If the diameter of the disk is 120 mm, they shall be set to 0000.

If the diameter of the disk is 80 mm, they shall be set to 0001.

Other settings are prohibited by this Ecma Standard.

Byte 2 – Disk structure

Bits b_0 to b_3 shall specify the Layer type.

They shall be set to 0010, indicating that the disk contains Recordable user data Zone(s).

Bit b_4 shall specify the Track path. It shall be set to ONE, indicating Opposite Track Path.

DRAFT 2009

--`,,```,,,,````-`-`,,`,,`,`,,`---

Copyright International Organization for Standardization
Provided by IHS under license with ISO
No reproduction or networking permitted without license from IHS
Not for Resale

Bits b_5 and b_6 shall specify the Number of layers. These bits shall be set to 01, indicating Dual layer.

Bit b_7 shall be set to ZERO.

Other settings are prohibited by this Ecma Standard.

Byte 3 – Recorded density

Bits b_0 to b_3 shall specify the Average track pitch.

They shall be set to 0000, indicating the average track pitch of 0,74 µm.

Bits b_4 to b_7 shall specify the Channel bit length.

They shall be set to 0001, indicating 0,147 µm.

Other settings are prohibited by this Ecma Standard.

Bytes 4 to 15 – Data Zone allocation

Byte 4 shall be set to (00).

Bytes 5 to 7 shall be set to (030000) to specify the Sector Number 196 608 of the first Physical Sector of the Data Zone.

Byte 8 shall be set to (00).

Bytes 9 to 11 shall specify the End sector number of the Data Zone. These bytes shall be set to the sector number corresponding to the ECC Block address specified in the pre-pit information for Pre-pit data block of Field ID2. See 28.3.6.1.

Byte 12 shall be set to (00).

Bytes 13 to 15 shall specify the End sector number of Layer 0. These bytes shall be set to the sector number corresponding to the ECC Block address specified in the pre-pit information for Pre-pit data block of Field ID1. See 28.3.5.3.

Other settings are prohibited by this Ecma Standard.

Byte 16 – NBCA descriptor

Bit b_7 shall specify whether or not there is NBCA on the disk, see Annex L.

If NBCA does not exist, it shall be set to ZERO.

If NBCA exists, it shall be set to ONE.

Bit b_6 to b_0 shall be set to 000 0000.

Other settings are prohibited by this Ecma Standard.

Byte 17 – Maximum recording speed

This byte shall specify the Maximum applicable recording speed of a disk.

These bits shall be set to 0000 0000 to indicate 2x-speed recording.

Other settings are prohibited by this Ecma Standard.

Byte 18 – Minimum recording speed

This byte shall specify the minimum applicable recording speed of the disk.

This byte shall be set to 0000 0000 to indicate 2x-speed recording for a Class 0 disk.

Other settings are prohibited by this Ecma Standard.

Bytes 19 to 25 – Recording speed table

Each byte of Bytes 19 to 25 shall specify all other recording speeds supported by the disk than the maximum and minimum recording speeds assigned in Bytes 17 and 18. Bits assignment rule of each byte is same as Byte 17.

Copyright International Organization for Standardization
Provided by IHS under license with ISO
No reproduction or networking permitted without license from IHS
Not for Resale

Each recording speed shall be assigned continuously and unused field shall be set (00) that does not mean 2x-speed recording.

Byte 26 – Class

This byte shall specify the Class.

This byte shall be set to 0000 0000 to indicate the Class 0 and the Basic recording speed is 2x-speed.

Other settings are prohibited by this Ecma Standard.

Byte 27 – Extended Version number

This byte shall specify actual version number of the disk. This byte shall be set to 0010 0000, indicating this Ecma Standard.

Other settings are prohibited by this Ecma Standard.

Bytes 28 to 31

These bytes shall be set to (00).

Bytes 32 to 39 – Sector number of the 1st sector of the Extra Border Zone

Bytes 32 to 35 shall specify the Start sector number of Current RMD in Extra Border Zone.

These bytes shall be set to (0002FE10).

Bytes 36 to 39 shall specify the Start sector number of Physical format information blocks in Extra Border Zone.

These bytes shall be set to (0002FFA0).

Byte 40 – Pre-recorded/Embossed information code

This byte shall specify the pre-recorded or embossed area on a disk. The following areas can be pre-recorded or embossed by disk manufacturers.

Table 9 — Pre-recorded or embossed areas

Zones	Applicable option	ECC Block address
Initial zone in Lead-in Zone	Embossed	(FFDBBB) to (FFD1E0) (without NBCA) (FFD2A4) to (FFD1E0) (with NBCA)
Fixed Middle Zone	Pre-recorded or embossed	X-1 to (FDCF6D) and (023573) to $\overline{X-1}$ (for 12 cm disk) X-1 to (FF2F22) and (00D4D6) to $\overline{X-1}$ (for 8 cm disk)
Lead-out Zone	Embossed	Y-1 to (002942) (without NBCA) Y-1 to (002F99) (with NBCA)

NOTE
X is the Last address of Data Recordable Zone on Layer 0 specified in the pre-pit information for Pre-pit data block of Field ID1. See 28.3.5.

Y is the Last address of Data Recordable Zone on Layer 1 specified in the pre-pit information for Pre-pit data block of Field ID2. See 28.3.6.

Bit b_0 shall be set to ZERO to indicate Control Data Zone is embossed.

Bit b_1 shall be set to indicate the embossed status of Lead-in Zone.

Bit b_1 shall be set to ZERO when Lead-in Zone is not embossed.

Bit b_1 shall be set to ONE when Lead-in Zone is embossed.

Bit b_2 shall be set to ZERO.

--`,,```,,,,````-`-`,,`,,`,`,,`---

Copyright International Organization for Standardization
Provided by IHS under license with ISO
No reproduction or networking permitted without license from IHS
Not for Resale

Bit b_3 shall be set to indicate the embossed status of Lead-out Zone.

Bit b_3 shall be set to ZERO when Lead-out Zone is not embossed.

Bit b_3 shall be set to ONE when Lead-out Zone is embossed.

Bits b_4 to b_7 shall be set to ZERO.

Bytes 41 to 511

These bytes shall be set to (00).

Bytes 512 to 2 047 – Extended embossed information

These bytes shall specify Extended embossed information. Extended embossed information shall include the contents in the Pre-pit data block Field ID1 to ID5 and the 2x-speed recording conditions, and the other bytes in this field shall be set to (00) for future extension. The contents of the Extended embossed information are classified and determined by the PFI (Physical Format Information) Field ID as shown in Table10. See 28.3.

The reserved field (Bytes 632 to 2 047) shall be used to store the parameters of the recording conditions for the extended recording speed.

Unused PFI Field shall be set to (00).

Table 10 — Extended embossed information

BP	Contents	Number of bytes
512	PFI Field ID descriptor	1
513 to 519	Set to (00)	7
520 to 527	PFI Field ID0	8
528 to 535	PFI Field ID1	8
536 to 543	PFI Field ID2	8
544 to 551	PFI Field ID3	8
552 to 559	PFI Field ID4	8
560 to 567	PFI Field ID5	8
568 to 575	PFI Field ID6	8
576 to 583	PFI Field ID7	8
584 to 591	PFI Field ID8	8
592 to 599	PFI Field ID9	8
600 to 607	PFI Field ID10	8
608 to 615	PFI Field ID11	8
616 to 623	PFI Field ID12	8
624 to 631	PFI Field ID13	8
632 to 2047	Set to (00)	1416

26.1.6.1.1 PFI Field ID descriptor

This byte shall specify the maximum PFI Field ID number of the existing fields of the Extended embossed information.

This byte shall be set to (0D), indicating the maximum PFI Field ID number is 13 for a disk which supports 2x-speed as a maximum recording speed for each layer.

Other settings are prohibited by this Ecma Standard.

Copyright International Organization for Standardization
Provided by IHS under license with ISO
No reproduction or networking permitted without license from IHS
Not for Resale

26.1.6.1.2 PFI Field ID0

The Extended embossed data of PFI Field ID0 shall be as shown in Table 11.

Table 11 — Extended embossed data of PFI Field ID0

BP	Contents	RBP
520	PFI Field ID (00)	0
521 to 527	Set to (00)	1 to 7

NOTE
RBP indicates the relative byte position from the first byte in each PFI Field ID information.

26.1.6.1.3 PFI Field ID1 to ID5

The extended embossed data configuration of PFI Field ID1 to ID5 shall be as shown in Table 12. See 28.3.5, 28.3.6, 28.3.7 and 28.3.8.

Table 12 — Extended embossed data of PFI Field ID1 to ID5

BP	Contents	RBP
528	PFI Field ID (01)	0
529 to 534	These contents shall be copied from the pre-pit data frame 7 to 12 in the pre-pit data block Field ID1. Note that the Extension code (Byte 534) does not indicate the maximum number of PFI Field ID.	1 to 6
535	Set to (00)	7
536	PFI Field ID (02)	0
537 to 542	These contents shall be copied from the pre-pit data frame 7 to 12 in the pre-pit data block Field ID2.	1 to 6
543	Set to (00)	7
544	PFI Field ID (03)	0
545 to 550	These contents shall be copied from the pre-pit data frame 7 to 12 in the pre-pit data block Field ID3	1 to 6
551	Set to (00)	7
552	PFI Field ID (04)	0
553 to 558	These contents shall be copied from the pre-pit data frame 7 to 12 in the pre-pit data block Field ID4	1 to 6
559	Set to (00)	7
560	PFI Field ID (05)	0
561 to 566	These contents shall be copied from the pre-pit data frame 7 to 12 in the pre-pit data block Field ID5.	1 to 6
567	Set to (00)	7

NOTE
RBP indicates the relative byte position from the first byte in each PFI Field ID information.

26.1.6.1.4 PFI Field ID6 to ID13

The Extended embossed data of PFI Field ID6 to ID13 shall be as shown in Table 13. The contents of PFI Field ID6 to ID9 and ID10 to ID13 shall indicate the 2x-speed recording conditions for Layer 0 and for Layer 1 respectively.

Copyright International Organization for Standardization
Provided by IHS under license with ISO
No reproduction or networking permitted without license from IHS
Not for Resale

Table 13 — Extended embossed data of PFI Field ID6 to ID13

BP	Contents	RBP
568	PFI Field ID (06)	0
569	2x-speed OPC suggested code (Recording power) for Layer 0	1
570	2x-speed OPC suggested code (Erasing power ratio) for Layer 0	2
571 to 574	1st byte to 4th byte of 2x-speed Write Strategy code for Layer 0	3 to 6
575	2x-speed OPC suggested code (Ke value) for Layer 0	7
576	PFI Field ID (07)	0
577 to 582	5th byte to 10th byte of 2x-speed Write Strategy code for Layer 0	1 to 6
583	Set to (00)	7
584	PFI Field ID (08)	0
585 to 590	11th byte to 16th byte of 2x-speed Write Strategy code for Layer 0	1 to 6
591	Set to (00)	7
592	PFI Field ID (09)	0
593 to 599	Set to (00)	1 to 7
600	PFI Field ID (0A)	0
601	2x-speed OPC suggested code (Recording power) for Layer 1	1
602	2x-speed OPC suggested code (Erasing power ratio) for Layer 1	2
603 to 606	1st byte to 4th byte of 2x-speed Write Strategy code for Layer 1	3 to 6
607	2x-speed OPC suggested code (Recording power shift) for Layer 1	7
608	PFI Field ID (0B)	0
609 to 614	5th byte to 10th byte of 2x-speed Write Strategy code for Layer 1	1 to 6
615	Set to (00)	7
616	PFI Field ID (0C)	0
617	2x-speed OPC suggested code (Recording power) for Layer 1 (option)	1
618	2x-speed OPC suggested code (Erasing power ratio) for Layer 1 (option)	2
619 to 622	1st byte to 4th byte of 2x-speed Write Strategy code for Layer 1 (option)	3 to 6
623	2x-speed OPC suggested code (Recording power shift) for Layer 1 (option)	7
624	PFI Field ID (0D)	0
625 to 628	5th byte to 8th byte of 2x-speed Write Strategy code for Layer 1 (option)	1 to 4
629 to 631	Set to (00)	5 to 7

NOTE
RBP indicates the relative byte position from the first byte in each PFI Field ID field.

Copyright International Organization for Standardization
Provided by IHS under license with ISO
No reproduction or networking permitted without license from IHS
Not for Resale

Bytes 569, 601 and 617 – 2x-speed OPC suggested code (Recording power)

These fields specify the optimum recording power for 2x-speed recording of a disk. Byte 569 specifies the optimum recording power for Layer 0 with the Write Strategy specified in 14.3.1. Byte 601 specifies the optimum recording power for Layer 1 with the Write Strategy specified in 14.3.2 determined through the recorded Layer 0. Byte 617 specifies the optimum recording power for Layer 1 with the Write Strategy specified in 14.3.1 determined through the recorded Layer 0.

The Recording power code shall be as shown in Table 14.Bytes 569 and 601 shall be specified up to 35,0 mW (3B), and Byte 617 can be specified up to 45,0 mW (4F).

If it is not specified, these fields shall be set to (00). See Annex H.

Table 14 — 2x-speed OPC suggested code (Recording power)

code	Recording power
(00)	Not specified
(01) to (03)	reserved
(04) to (3B)	5.5 mW + (Value* × 0.5 mW)
(3C) to (4F)	5.5 mW + (Value* × 0.5 mW) (option)
(50) to (FF)	Set to (00)

**NOTE*
Value shall be determined by converting the code in hexadecimal notation to decimal notation.

Bytes 570, 602 and 618 – 2x-speed OPC suggested code (Erasing power ratio)

These fields specify the optimum erasing power ratio for the disk. The erasing power ratio(ε) shall be defined as ε= Pe/Po, so the erasing power for the disk can be obtained using the value of ε.

Bytes 570, 602 and 618 specify the erasing power ratio corresponding to the optimum recording power specified in Bytes 569, 601 and 617 respectively.

The ε code shall be as shown in Table 15.

If it is not specified, this code shall be set to (00). See Annex H.

Table 15 — 2x-speed OPC suggested code (Recording power)

code	ε value
(00)	Not specified
(01) to (A1)	0.095 + (Value* × 0.005)
(A2) to (FF)	Set to (00)

**NOTE*
Value is determined by converting the 2x-speed OPC suggested code in hexadecimal notation to decimal notation.

Byte 575 – 2x-speed OPC suggested code (Ke value)

This field specifies the optimum Ke value for 2x-speed recording of a disk. The Ke value code shall be as shown in Table 16.

The Ke value can be used to find the optimum erasing power by Ke method. Refer to Annex H.

Copyright International Organization for Standardization
Provided by IHS under license with ISO
No reproduction or networking permitted without license from IHS
Not for Resale

Table 16 — 2x-speed OPC suggested code (Recording power)

code	Ke value
00h	Not specified
01h to 3Fh	0.99 + (Value* × 0.01)
40h to FFh	Set to (00)

*NOTE
Value shall be determined by converting the code in hexadecimal notation to decimal notation.

Bytes 571 to 574, 577 to 580, 619 to 622 and 625 to 628 – 2x-speed Write Strategy code

These fields shall indicate the Write Strategy variations for 2x-speed recording for each layer, specified in 14.3.1.

The 2x-speed Write Strategy code for Layer 0 shall consist of 8 bytes of user data located in PFI Field ID6 to ID7, as shown in Table 17. These areas indicate the mandatory parameters to be assigned.

The 2x-speed Write Strategy code for Layer 1 shall consist of 8 bytes of user data located in PFI Field ID12 to ID13, as shown in Table 17. These areas indicate the optional parameters to be assigned.

Table 17 — 2x-speed Write Strategy code field

PFI Field ID	RBP	Contents (code)
ID6 / ID12 (option)	3	Ttop
	4	d3Ttop
	5	d4Ttop
	6	d5Ttop to d11Ttop and d14Ttop
ID7 / ID13 (option)	1	Tmp
	2	Tcl
	3	Tet
	4	Set to (00)

Ttop codes shall indicate the top pulse width of the write pulse for nT (n = 3 to 11 and 14), as specified in Table 18.

dnTtop (n = 3, 4 , 5 to 11 and 14) shall indicate the shift of the trailing edge of the top pulse as specified in Figure 19.

dnTtop code is specified in Table 19.

Tmp code shall indicate the multi pulse width as specified in Table 20.

Tcl code shall indicate the cooling pulse width as specified in Table 21.

Tet code shall indicate the erase top pulse width as specified in Table 22.

Table 18 — Ttop code

code	Top pulse width
(00)	reserved
(01) to (2F)	0.075T + (Value* × 0.025T)
(30) to (FF)	Set to (00)

*NOTE
Value shall be determined by converting the codes in hexadecimal notation to decimal notation.

DRAFT 2009

Copyright International Organization for Standardization
Provided by IHS under license with ISO
No reproduction or networking permitted without license from IHS
Not for Resale

Table 19 — dnTtop code

code	Top pulse shift
(00)	Set to (00)
(01) to (3D)	–0.525T + (Value* × 0.025T)
(3E) to (FF)	Set to (00)

*NOTE
Value shall be determined by converting the code in hexadecimal notation to decimal notation.

Table 20 — Tmp code

code	Multi pulse width
(00)	Set to (00)
(01) to (1F)	0.075T + (Value* × 0.025T)
(20) to (FF)	Set to (00)

*NOTE
Value shall be determined by converting the code in hexadecimal notation to decimal notation.

Table 21 — Tcl code

code	Cooling pulse length
(00)	Set to (00)
(01) to (4F)	–0.025T + (Value* × 0.025T)
(50) to (FF)	Set to (00)

*NOTE
Value shall be determined by converting the code in hexadecimal notation to decimal notation.

Table 22 — Tet code

code	Erase top pulse width
(00)	0T
(01) to (1F)	0.075T + (Value* × 0.025T)
(20) to (FF)	Set to (00)

*NOTE
Value shall be determined by converting the codes in hexadecimal notation to decimal notation.

When Tet is not applied, this field shall be set to (00).

Bytes 603 to 606 and 609 to 614 – 2x-speed Write Strategy code for Layer 1

These fields shall indicate the Write Strategy variations for 2x-speed recording for Layer 1, specified in 14.3.2.

The 2x-speed Write Strategy code shall consist of 10 bytes of user data located in PFI Field ID10 to ID11 for Layer 1, as shown in 23. These areas indicate the mandatory parameters to be assigned.

DRAFT 09

--`,,```,,,,````-`-`,,`,,`,`,,`---
Copyright International Organization for Standardization
Provided by IHS under license with ISO
No reproduction or networking permitted without license from IHS
Not for Resale

Table 23 — 2x-speed Write Strategy code field with 2T-multi-pulse

PFI Field ID	RBP	Contents (code)
ID10	3	T3
	4	dT3
	5	3Tcl
	6	Tmp
ID11	1	eTdlp1
	2	eTdlp2
	3	eTcl
	4	oTdlp1
	5	oTdlp2
	6	oTcl

The following codes are specified in 14.3.2 and in Figure 20.

T3 code shall indicate the top pulse width for recording the 3T data as specified in Table 24.

dT3 code shall indicate the delay of the top pulse for recording the 3T data as specified in Table 25.

3Tcl, eTcl and oTcl code shall indicate the cooling pulse width as specified in Table 26.

Tmp code shall indicate the multi pulse width as specified in Table 27.

eTdlp1 and oTdlp1 code shall indicate the last pulse shift as specified in Table 28.

eTdlp2 and oTdlp2 code shall indicate the addition of the last pulse width from Tmp as specified in Table 28.

Table 24 — T3 code

code	T3 pulse width
(00)	Set to (00)
(01) to (31)	0.375T + (Value* × 0.025T)
(32) to (FF)	Set to (00)

*NOTE
Value shall be determined by converting the T3 code in hexadecimal notation to decimal notation.

Table 25 — dT3 code

code	3T pulse shift
(00)	Set to (00)
(01) to (21)	–0.425T + (Value* × 0.025T)
(22) to (FF)	Set to (00)

*NOTE
Value shall be determined by converting the dT3 code in hexadecimal notation to decimal notation.

Copyright International Organization for Standardization
Provided by IHS under license with ISO
No reproduction or networking permitted without license from IHS
Not for Resale

Table 26 — 3Tcl, eTcl and oTcl code

code	Cooling pulse width
(00)	Set to (00)
(01) to (51)	–0.025T + (Value* × 0.025T)
(52) to (FF)	Set to (00)

*NOTE
Value shall be determined by converting the each code in hexadecimal notation to decimal notation.

Table 27 — Tmp code

code	Multi pulse width
(00)	Set to (00)
(01) to (31)	0.375T + (Value* × 0.025T)
(32) to (FF)	Set to (00)

*NOTE
Value shall be determined by converting the Tmp code in hexadecimal notation to decimal notation.

Table 28 — eTdlp1, eTdlp2, oTdlp1 and oTdlp2 code

code	Shift or difference from Tmp of last pulse
(00)	Set to (00)
(01) to (41)	–0.825T + (Value* × 0.025T)
(42) to (FF)	Set to (00)

*NOTE
Value shall be determined by converting the each code in hexadecimal notation to decimal notation.

Bytes 607 and 623–2x-speed OPC suggested code (Recording power shift) for Layer 1

These fields shall specify the recording power shift of Layer 1 depending on the recorded status of Layer 0. The Recording power shift shall be calculated by the following equation.

Recording power shift = Po1 / Po2

where,

Po1 : Optimum recording power of Layer 1 through the unrecorded Layer 0

Po2 : Optimum recording power of Layer 1 through the recorded Layer 0

The Recording power shift code shall be assigned as shown in Table 29.

Table 29 — 2x-speed OPC suggested code (Recording power shift) for Layer 1

code	Recording power shift
(00)	Set to (00)
(01) to (1F)	0.89 + (Value* × 0.01)
(20) to (FF)	Set to (00)

*NOTE
Value shall be determined by converting the code in hexadecimal notation to decimal notation.

26.1.6.2 Disk manufacturing information

This Ecma Standard does not specify the format and the content of these 2 048 bytes. Unless otherwise agreed to by the interchange parties, they shall be ignored in interchange.

Copyright International Organization for Standardization
Provided by IHS under license with ISO
No reproduction or networking permitted without license from IHS
Not for Resale

26.1.6.3 Reserved for system use

The bit setting in this field is application dependent, for instance a video application. If this setting is not specified by the application, the default setting shall be all ZEROs.

26.1.7 Extra Border Zone

The configuration of Extra Border Zone on Layer 0 shall be as shown in Table 30.

Table 30 — Structure of Extra Border Zone on Layer 0

Unit Position	Contents
0	Linking Loss Area (All (00))
1 to 5	Current RMD
6 to 25	Set to (00)
26 to 30	Physical format information blocks
31	Block SYNC Guard Area

Unit Position indicates the relative ECC block position from the beginning of Extra Border Zone.

The Data type bit of the sector just before each Sector 0 in the 5 copies of current RMD shall be set to ZERO.

Physical format information block shall be recorded five times with a data structure as shown in Figure 46.

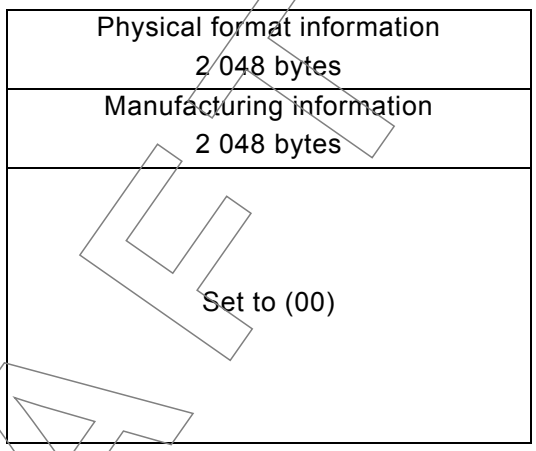

Figure 46 — Structure of Physical format information block

Physical format information shall be as specified in 26.1.3.2.

Manufacturing information shall be as specified in 26.1.3.1.

26.2 Middle Zone

The start sector number (the most inner position) of the fixed Middle Zone on Layer 0 shall be the next number of the sector number specified by Bytes 13 to 15 in the Embossed Physical format information which indicates the End Sector number of Layer 0.

The sector number of the Middle Zone in the most inner position on Layer 1 shall take the bit inverted value to the start sector number of the Middle Zone on Layer 0.

All the Main data of the Data frames eventually recorded as Physical sectors in the Middle Zone shall be set to (00).

The shifted Middle Zone shall not be newly located between the innermost radius and the existing shifted Middle Zone.

--`,,```,,,,````-`-`,,`,,`,`,,`---

Copyright International Organization for Standardization
Provided by IHS under license with ISO
No reproduction or networking permitted without license from IHS
Not for Resale

DRAFT 2009

The fixed Middle Zone can be pre-recorded or embossed by disk manufacturers as an option. See 26.1.6.1.

When the fixed Middle Zone is pre-recorded or embossed, the operational signals from the fixed Middle Zone shall satisfy the Recorded disk specifications and the Unrecorded disk specifications. See 13 and14.

26.3 Lead-out Zone

All the Main data of the Data frames eventually recorded as Physical sectors in the Lead-out Zone shall be set to (00). Lead-out Zone shall be one continuous area, and shall not be extended outer than the End sector number of the Data Zone.

Lead-out Zone can be embossed by disk manufacturers as an option under the following conditions. See 26.1.6.1.

- The operational signals from the Lead-out Zone shall satisfy the Recorded disk specifications for Control data blocks in the embossed Control data zone. See 15.1.

- The first ECC block of the Lead-out Zone shall be Block SYNC Guard Area.

- The embossed area of the Lead-out Zone shall start from this Block SYNC Guard Area.

- The linking scheme shall be applied for the recordings of the Data Recordable Zone and the Lead-out Zone, see 24.

DRAFT 2009

Copyright International Organization for Standardization
Provided by IHS under license with ISO
No reproduction or networking permitted without license from IHS
Not for Resale

Section 6 — Format of the Unrecorded Zone

27 General description of the Unrecorded Zone

A continuous spiral pre-groove forms the track of the Unrecorded Zone. The track extends from the inner part of the disk to the outer part of the disk on Layer 0 and from the outer part of the disk to the inner part of the disk on Layer 1 respectively. The track is wobbled at a specified frequency to control the drive functions. The precise address information for an unrecorded disk is embossed on the land between adjacent grooved regions.

The Unrecorded Zone shall be divided into three parts: the R-Information Zone, the Initial Information Zone and the Outer Disk Testing Area.

The R-Information Zone shall be divided into two parts: the Inner Disk Testing Area and the Recording Management Area.

The Initial Information Zone of each layer shall be divided into three parts with Opposite Track Path as shown in Figure 47. Starting from the inner radius on Layer 0, these zones are the Lead-in Zone, the Data Recordable Zone, and the fixed Middle Zone. Starting from the outer radius on Layer 1, these zones are the fixed Middle Zone, the Data Recordable Zone, and the Lead-out Zone. The shifted Middle Zone can be added to inner side accompanying with unrecorded area. The allocation of the Lead-out Zone and the Middle Zone will be determined by finalization. These six zones are essential and identical in principle to the same zones on a dual layer type of DVD-Read-Only disk.

The recording data shall be recorded in the pre-groove guided by the wobble and Pre-pit Information that is embossed in the land.

The accurate start address before recording shall be determined by decoding the Pre-pit Information on the land.

27.1 Layout of the Unrecorded Zone

The Unrecorded Zone of each layer shall be sub-divided as shown in Table 31 and 32 respectively. The ECC Block address (see clause 27.2) of the first block of each zone is shown in those tables.

Table 31 — Layout of the Unrecorded Zone on Layer 0

		ECC Block address of the first block of the Zone	Number of blocks
R-Information Zone	Inner Disk Testing Area	(FFE077)	581
	Recording Management Area	(FFDE31)	629
Lead-in Zone		(FFDBBB)	3 004
Data Recordable Zone		(FFCFFF)	130 806
fixed Middle Zone		(FDD109)*	1 088
Outer Disk Testing Area		(FDCCC9)	1 091

NOTE
The outermost address of the Data Recordable Zone on Layer 0 will be determined by a disk manufacturer.

DRAFT

Copyright International Organization for Standardization
Provided by IHS under license with ISO
No reproduction or networking permitted without license from IHS
Not for Resale

Table 32 — Layout of the Unrecorded Zone on Layer 1

		ECC Block address of the first block of the Zone	Number of blocks
R-Information Zone	Inner Disk Testing Area	(00240A)	581
	Recording Management Area	(0025A2)	189
Lead-out Zone		(00336F)*	3 311
Data Recordable Zone		(022EF5)*	129 926
fixed Middle Zone		(023573)	1 662
Outer Disk Testing Area		(0239B6)	1 091

NOTE
Those addresses will be determined by a disk manufacturer.

27.2 ECC Block address

The ECC Block address (see 4.13 and 28.3.2) shall be the absolute physical address of the track. The start and stop positions of each zone shall be defined using the ECC Block address.
The address shall decrease from the inside to outside diameter of the disk on Layer 0 and from the outside to inside diameter of the disk on Layer 1, respectively.
The address shall be embossed on the land as the Pre-pit Information.

27.3 ECC Block numbering

The ECC Block address shall be calculated by setting the ECC Block address so that the block placed at the beginning of the Data Zone shall be (FFCFFF). This first block of the Data Recordable Zone on Layer 0 shall be located after the Lead-in Zone as shown in Figure 47.

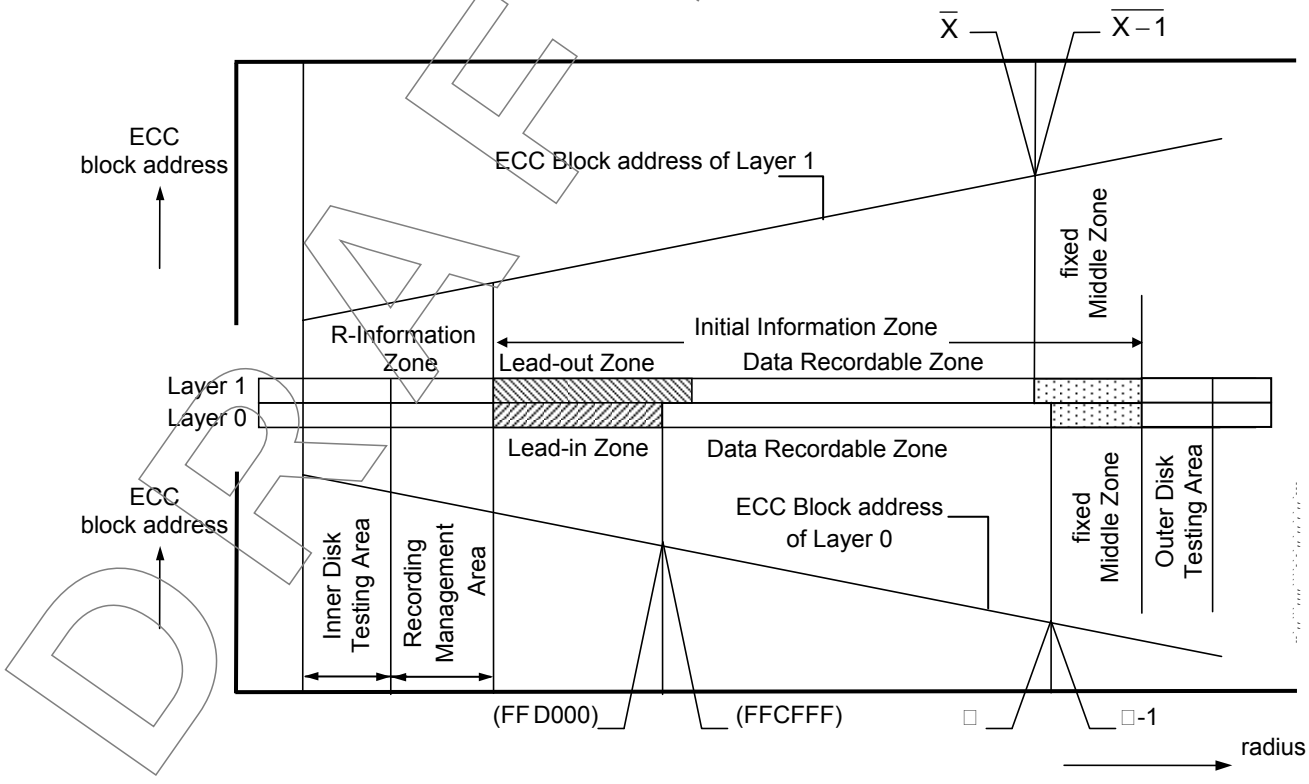

Figure 47 — Pre-pit sector layout and ECC Block numbering

Copyright International Organization for Standardization
Provided by IHS under license with ISO
No reproduction or networking permitted without license from IHS
Not for Resale

28 Pre-pit Data format

28.1 General description

The Pre-pit Data is embossed as a sequence of Pre-pits on the land. The Pre-pit Data sequence corresponds to 16 sectors of the same physical size as 1 ECC Block to be recorded in the groove.

One set of Pre-pits shall be given by 3 bits (b_2, b_1, b_0) every two SYNC Frames. The first set of Pre-pits in a Pre-pit physical sector is the Pre-pit SYNC Code. The first bit of the 3 bits is called the frame SYNC bit. In the Incremental recording mode, the frame SYNC bit shall be located at the special position of the recorded SYNC Code of the 16-bit Code Words in the groove. The assignment of these bits shall be as shown in Table 33.

Table 33 — Assignment of Land Pre-pit

	b_2	b_1	b_0
Pre-pit SYNC Code in Even position	1	1	1
Pre-pit SYNC Code in Odd position	1	1	0
Pre-pit data set to ONE	1	0	1
Pre-pit data set to ZERO	1	0	0

The assigned position of Pre-pits and the SYNC pattern of 16-bit Code words shall be as shown in Figures 48 and 49. The relation in phase between wobble and Land Pre-pit also shall be as specified in 14.5.3.

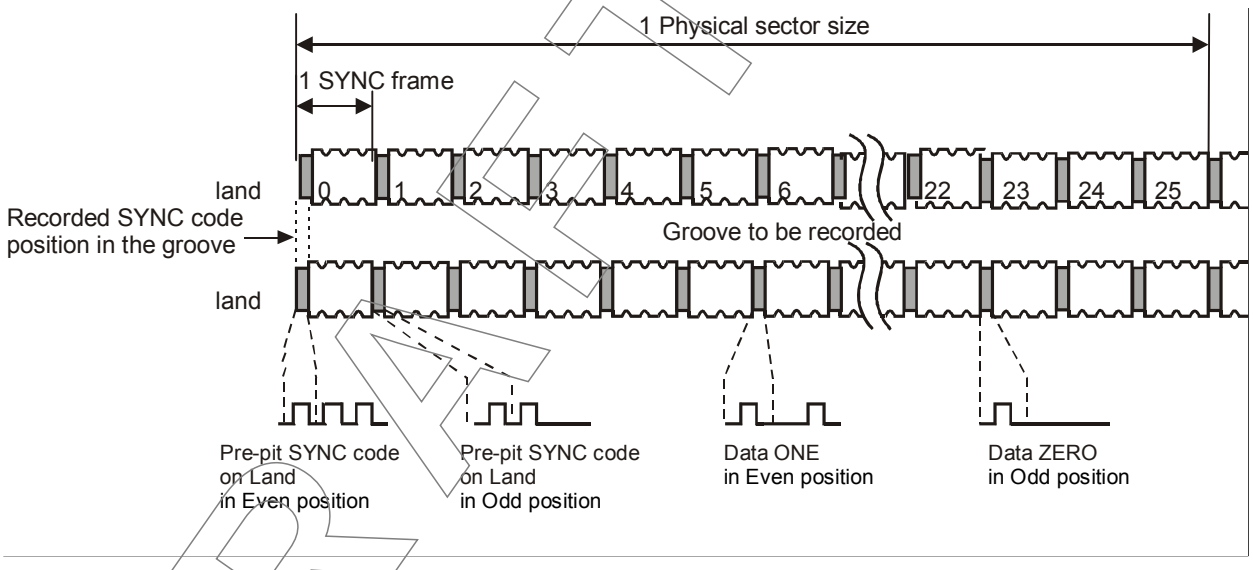

Figure 48 — Track formation

DRAFT

Copyright International Organization for Standardization
Provided by IHS under license with ISO
No reproduction or networking permitted without license from IHS
Not for Resale

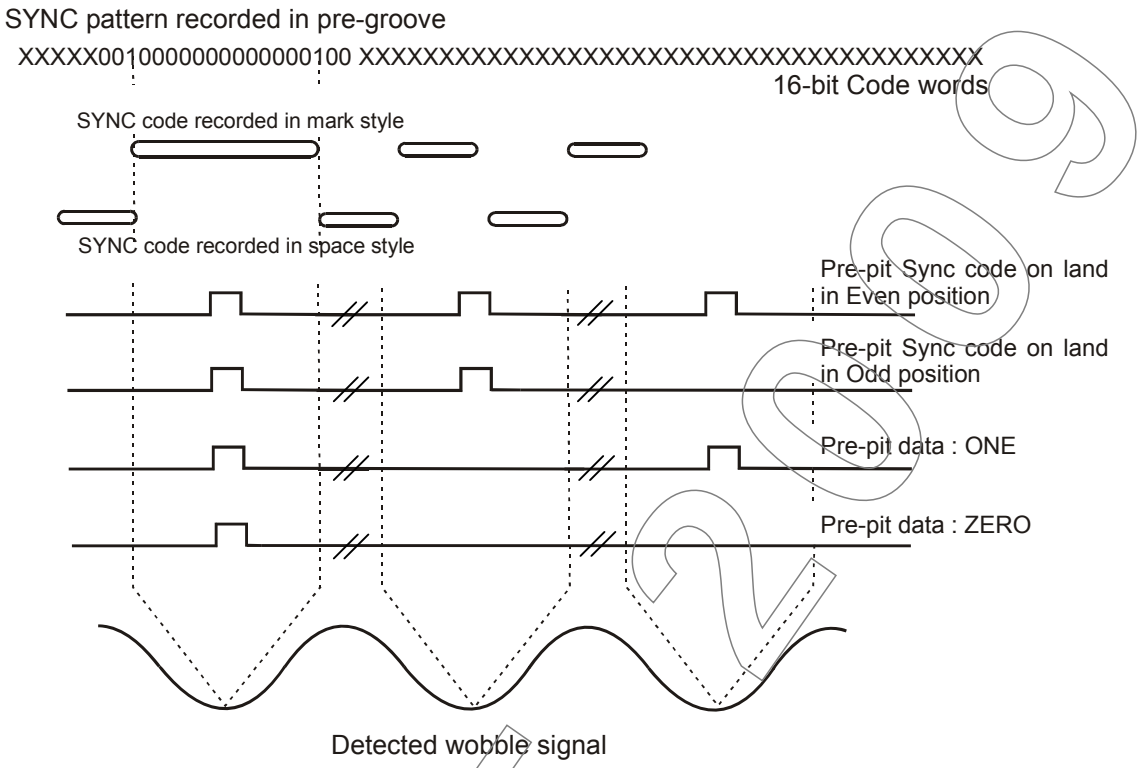

Figure 49 — Relationship of signals recorded in groove and land

There are two cases of Pre-pit position in two SYNC Frames called Even position and Odd position. Normally the Pre-pit should be recorded at the Even position. In mastering, when there is already a Pre-pit on the neighbouring land, the position of the Pre-pits shall be shifted to the Odd position sequence. Such a case is described in Figure 50.

The Pre-pits position can be shifted in a Pre-pit physical sector.

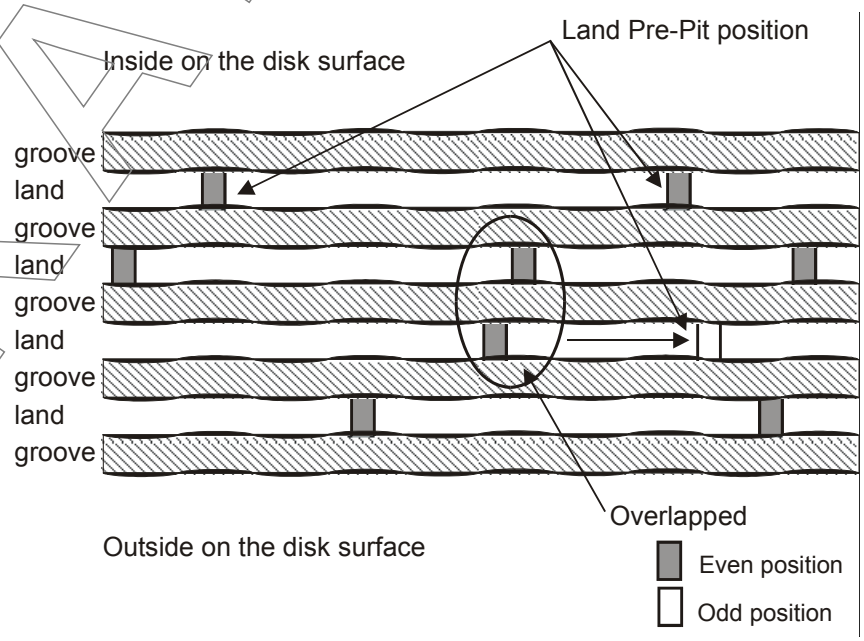

Figure 50 — Layout of land Pre-pit positioning

Copyright International Organization for Standardization
Provided by IHS under license with ISO
No reproduction or networking permitted without license from IHS
Not for Resale

The Pre-pit data frame shall consist of 4 bits of relative address specified in 28.3.1 and 8 bits of user data.

Pre-pit data shall be recorded in the user data area of the Pre-pit data frame. The Pre-pit data frame shall be as shown in Figure 51.

The Pre-pit physical sector shall be a Pre-pit data frame after transforming 1 bit into 3 bits and adding Pre-pit SYNC Code. The Pre-pit physical sector shall be recorded on the land as part of the Land Pre-Pit recording. See Figure 52 and Table 33.



Figure 51 — Pre-pit data frame structure

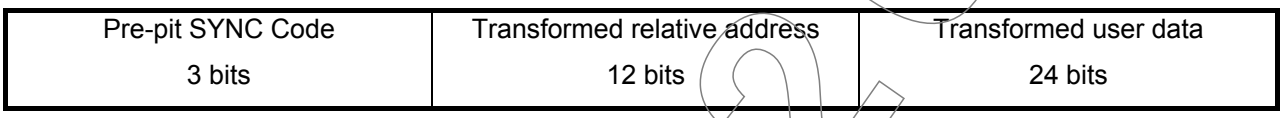

Figure 52 — Pre-pit physical sector structure

28.2 Pre-pit block structure

A Pre-pit data block shall be constructed with 16 Pre-pit data frames.

The Pre-pit data block shall have two data parts, part A and part B.

Part A shall consist of 3 bytes of ECC Block address (see 28.3.2) and 3 bytes of parity A (see 28.3.3), and relative address 0000 to 0101 (see 28.3.1), thus Part A is constructed with 6 Pre-pit data frames.

Part B shall consist of 1 byte of Field ID, 6 bytes of disk information and 3 bytes of parity B and relative address 0110 to 1111. Thus Part B is constructed with 10 Pre-pit data frames.

The Pre-pit physical block shall be constructed with 16 Pre-pit physical sectors which are constructed by transforming each 1 bit of Pre-pit data block to 3 bits and adding the Pre-pit SYNC Code.

This signal processing shall be as shown in Figure 53.

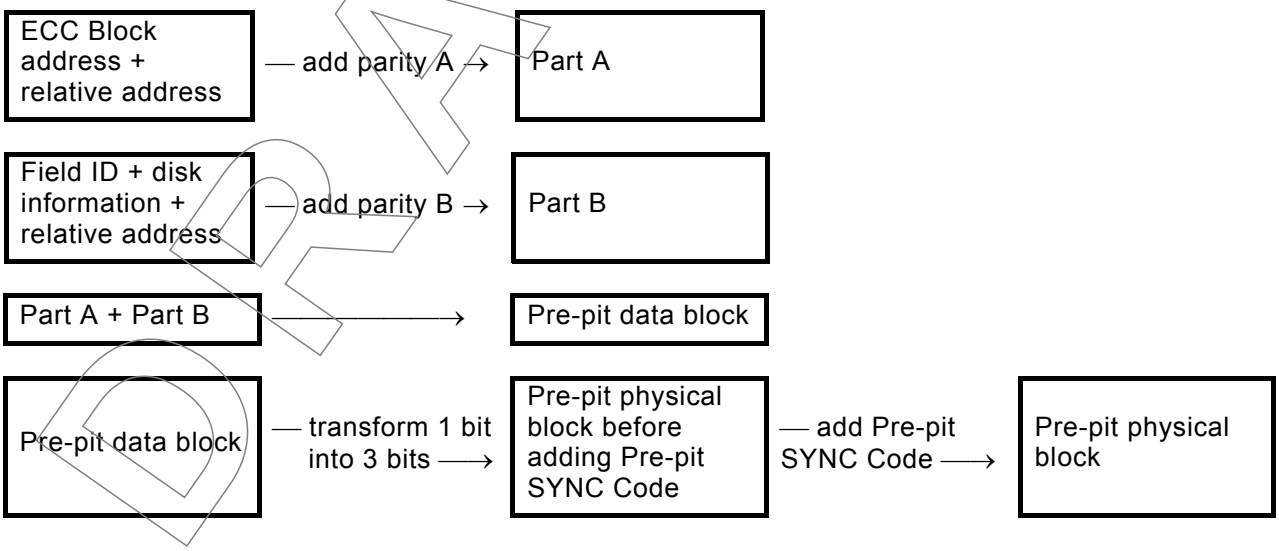

Figure 53 — Processing order to construct a Pre-pit block

Copyright International Organization for Standardization
Provided by IHS under license with ISO
No reproduction or networking permitted without license from IHS
Not for Resale

The Pre-pit block structure shall be as shown in Figure 54.

	Pre-pit physical block (using transformed Pre-pit data block, see Table 33)		
	Pre-pit data block		
Pre-pit SYNC Code	Relative address 0000 to 0101	ECC Block address (3 bytes)	Part A
		Parity A (3 bytes)	
	Relative address 0110 to 1111	Pre-pit field ID and disk information (7 bytes)	Part B
		Parity B (3 bytes)	

Figure 54 — Pre-pit block structure

A Pre-pit physical block shall be as shown schematically in Figure 55.

26 SYNC Frames

Pre-Pit SYNC Code and relative address | Pre-Pit part A and part B information

	E	O	E	O	E	O	E	O	E	O	E	O	E	O	E	O	E	O	E	O	E	O	E	O	E	O		
G																												
L	111		100		100		100		100		ECC Block address																A	No.0
G																												
L	111		100		100		100		101		ECC Block address																	No.1
G																												
L	111		100		100		101		100		ECC Block address																	No.2
G																												
L	111		100		100		101		101		Parity A																	No.3
G																												
L	111		100		101		100		100		Parity A																	No.4
G																												
L	111		100		101		100		101		Parity A																	No.5
G																												
L	111		100		101		101		100		Field ID																B	No.6
G																												
L	111		100		101		101		101		disk information																	No.7
G																												
L	111		101		100		100		100		disk information																	No.8
G																												
L	111		101		100		100		101		disk information																	No.9
G																												
L	111		101		100		101		100		disk information																	No.10
G																												
L	111		101		100		101		101		disk information																	No.11
G																												
L	111		101		101		100		100		disk information																	No.12
G																												
L	111		101		101		100		101		Parity B																	No.13
G																												
L	111		101		101		101		100		Parity B																	No.14
G																												
L	111		101		101		101		101		Parity B																	No.15

Legend:

i. G means groove, L means land, E means even position, O means odd position.
ii. Pre-pits SYNC Code is shown in even position in this representation. Relative address Pre-pit Data ONE is represented by 101 and Pre-pit Data ZERO is represented by 100 in this representation. The assignment of land Pre-pits is specified in Table 33.
iii. Last column is the Pre-pit Physical Sector Number in a Pre-pit physical block.
iv. Second from last column denotes the part A and part B of the Pre-pit physical block structure.

Figure 55 — Pre-pit physical block

Copyright International Organization for Standardization
Provided by IHS under license with ISO
No reproduction or networking permitted without license from IHS
Not for Resale

28.3 Pre-pit data block configuration

User data of Part A and Part B is called Pre-pit information. Pre-pit information of Part A shall be the ECC Block address. Pre-pit information of Part B shall be recorded in the disk information fields of Part B.

The contents of the disk information in Part B are classified and shall be distinguished by Field ID. Therefore each Pre-pit data block including the classified Part B shall be distinguished by a Field ID.

The classification and the location of the Pre-pit data blocks shall be as shown in Table 34.

Table 34 — Classification and location of Pre-pit data blocks

Field ID	Contents of disk information in Part B	Location
0	ECC Block address / Layer Information code	All Zones
1	Application code / Physical data / Last address of Data Recordable Zone on Layer 0	Lead-in Zone
2	Last address of Data Recordable Zone on Layer 1	
3	1st field of Manufacturer ID	
4	2nd field of Manufacturer ID	
5	reserved	

In the Lead-in Zone, Pre-pit data blocks of Field ID 1 to 5 shall be recorded as shown in Figure 56.

Field ID	Location	ECC Block address
Field ID1	Start of the Lead-in Zone	(FFDBBB)
Field ID2		
Field ID3		
Field ID4		
Field ID5		
Field ID1		
Field ID2		
Field ID3		
Field ID4		
Field ID5		
Field ID1		
:		
:		
:		
Field ID4		
Field ID5		
Field ID0		(FFD003)
Field ID0		(FFD002)
Field ID0		(FFD001)
Field ID0	End of the Lead-in Zone	(FFD000)
Field ID0		(FFCFFF)

Figure 56 — Layout of Pre-pit data blocks in the Lead- in Zone

--`,,```,,,,````-`-`,,`,,`,`,,`---
Copyright International Organization for Standardization
Provided by IHS under license with ISO
No reproduction or networking permitted without license from IHS
Not for Resale

28.3.1 Relative address

The Pre-pit data frame contains a relative address. The relative address shows the position of 16 Pre-pit data frames (one Pre-pit data block). Four bits shall be used to specify the relative address.

0000 First Pre-pit data frame
0001 Second Pre-pit data frame
⋮
1111 Last Pre-pit data frame

The relative address number shall be equal to the decimal value represented by the least significant 4 bits of the Physical Sector Number recorded in the groove. The relative address shall not have error detection and error correction code.

28.3.2 ECC Block address data configuration

The ECC Block address shall be equal to the bit-inverted decimal value represented by b_{23} to b_4 of the Physical Sector Number recorded in the adjacent inner groove. The ECC Block address at the start of Data Zone shall be (FFCFFF) as shown in Figure 57.

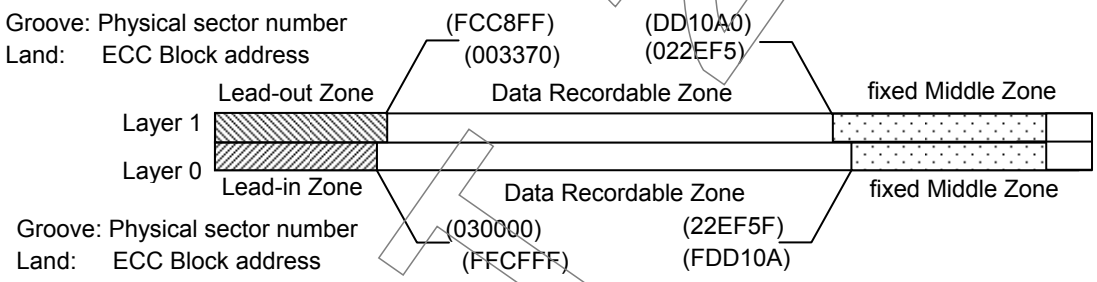

Figure 57 — Relation between Physical Sector Number and ECC Block address

The allocation of the Lead-out Zone and the Middle Zone are determined by Finalization.
The outermost address of the Data Recordable Zone on Layer 0 and the innermost address of the Data Recordable Zone on Layer 1 shall be assigned by a disk manufacturer.

The addresses in this figure except the innermost address of the Data Recordable Zone on Layer 0 are example values. See 28.3.5.3 and 28.3.6.1.

28.3.3 Parity A and Parity B

When in Figure 51, each byte allocated in the matrix is C_j (j = 0 to 15), then each byte for parity, C_j (j = 3 to 5 and j = 13 to 15), shall be as follows.

Parity A:

$$\text{Parity A}(x) = \sum_{j=3}^{5} C_j\, x^{5-j} = I(x)\, x^3 \bmod G_E(x)$$

where

$$I(x) = \sum_{j=0}^{2} C_j\, x^{2-j}$$

$$G_E(x) = \prod_{k=0}^{2} (x + \alpha^k)$$

α is the primitive root of the primitive polynomial $Gp(x) = x^8 + x^4 + x^3 + x^2 + 1$.

Parity B:

Copyright International Organization for Standardization
Provided by IHS under license with ISO
No reproduction or networking permitted without license from IHS
Not for Resale

$$\text{Parity } B(x) = \sum_{j=13}^{15} C_j \, x^{15-j} = I(x) \, x^3 \bmod G_E(x)$$

where

$$I(x) = \sum_{j=6}^{12} C_j \, x^{12-j}$$

$$G_E(x) = \prod_{k=0}^{2} (x + \alpha^k)$$

α is the primitive root of the primitive polynomial $Gp(x) = x^8 + x^4 + x^3 + x^2 + 1$.

28.3.4 Field ID0

The Pre-pit data block configuration of Field ID0 shall be as shown in Figure 58.

Pre-pit data frame number	Bit Position			
	0	1 to 4	5 (msb) to 12 (lsb)	
0	Pre-pit SYNC Code*	0000	First byte of ECC Block address	Part A
1		0001	Second byte of ECC Block address	
2		0010	Third byte of ECC Block address	
3		0011	First byte of Parity A	
4		0100	Second byte of Parity A	
5		0101	Third byte of Parity A	
6		0110	Field ID (00)	Part B
7		0111	First byte of ECC Block address	
8		1000	Second byte of ECC Block address	
9		1001	Third byte of ECC Block address	
10		1010	Layer Information code	
11		1011	Set to (00)	
12		1100	Set to (00)	
13		1101	First byte of Parity B	
14		1110	Second byte of Parity B	
15		1111	Third byte of Parity B	

NOTE
The Pre-pit SYNC Code shall be added to the Pre-pit data block to construct the Pre-pit physical block

Figure 58 — Pre-pit data block configuration of Field ID0

28.3.4.1 Layer information code

The Layer Information code shall be specified as follows.

Bit b_5 ZERO : Layer 0
ONE : Layer 1

Bit b_6 to b_{12} set to ZERO

DRAFT 2009

Copyright International Organization for Standardization
Provided by IHS under license with ISO
No reproduction or networking permitted without license from IHS
Not for Resale

28.3.5 Field ID1

The Pre-pit block configuration of Field ID1 shall be as shown in Figure 59.

Pre-pit data frame number	Bit Position			
	0	1 to 4	5 (msb) to 12 (lsb)	
0	Pre-pit SYNC Code*	0000	First byte of ECC Block address	Part A
1		0001	Second byte of ECC Block address	
2		0010	Third byte of ECC Block address	
3		0011	First byte of Parity A	
4		0100	Second byte of Parity A	
5		0101	Third byte of Parity A	
6		0110	Field ID (01)	Part B
7		0111	Application code	
8		1000	Disk physical code	
9		1001	First byte of Last address of Data Recordable Zone on Layer 0	
10		1010	Second byte of Last address of Data Recordable Zone on Layer 0	
11		1011	Third byte of Last address of Data Recordable Zone on Layer 0	
12		1100	Version number | Extension code	
13		1101	First byte of Parity B	
14		1110	Second byte of Parity B	
15		1111	Third byte of Parity B	

NOTE
The Pre-pit SYNC Code shall be added to the Pre-pit data block to construct the Pre-pit physical block

Figure 59 — Pre-pit data block configuration of Field ID1

28.3.5.1 Application code

The Application code shall be specified as follows.

Bit Position 5 set to ZERO

Bit Position 6 set to ZERO : Disk for restricted use

Bit Position 7 to 12 set to 000000 : reserved for single layer DVD-RW disk which has Class 0

set to 000010 : DVD-RW for DL disk with Class 0

Bit Position 7 to 12 set to others : Special purpose disk for use only in special drives.

Bit Position 6 set to ONE : Disk for unrestricted use

Bit Position 7 to 12 set to 000000 : reserved for single layer DVD-RW disk which has Class 0

Bit Position 7 to 12 set to others : Reserved

28.3.5.2 Disk physical code

Basic physical characteristics of the disk shall be specified in the Disk physical code field as shown in Table 35.

Copyright International Organization for Standardization
Provided by IHS under license with ISO
No reproduction or networking permitted without license from IHS
Not for Resale

Table 35 — Disk physical code

Bit position	Content	Bit settings and meaning
5 (msb)	Track pitch	Set to ONE, indicating the track pitch is 0,74 µm
6	Reference velocity	Set to ZERO, indicating the reference velocity is 3,84 m/s
7	Disk diameter	ZERO = 120 mm ONE = 80 mm
8	Reflectivity(1)	Set to ONE, indicating the reflectivity is less than 27 %
9	Reflectivity(2)	Set to ZERO
10	Media type(1)	ZERO = others ONE = phase change
11	Media type(2)	Set to ONE, indicating Re-recordable media
12 (lsb)	Media type(3)	Set to One, indicating Opposite Track Path

28.3.5.3 Last address of Data Recordable Zone on Layer 0

The last ECC Block address of the Data Recordable Zone on Layer 0 shall be specified in hexadecimal notation in the Last Address of Data Recordable Zone on Layer 0 field.

The last ECC Block address shall be defined to ensure the user data capacity of 8,54 Gbytes per side for 120 mm disk, and 2,66 Gbytes per side for 80 mm disk respectively.

The Last address of Data Recordable Zone on Layer 0 does not indicate the minimum ECC Block address of the disk but indicates the outer limit of the Data Recordable Zone. The Pre-pit physical block on Layer 0 shall extend toward the outer diameter of the disk, beyond the zone indicated by the last address of Data Recordable Zone on Layer 0.

NOTE
An example of assignment of this field for 120 mm disk is (FDD10A)

28.3.5.4 Version Number

These bits shall be assigned as same as the Compatible Version number specified in the Embossed physical format information. See 26.1.6.1.

28.3.5.5 Extension code

These bits shall be set to 0000, indicating this Ecma Standard.

Other settings are prohibited by this Ecma Standard.

DRAFT

Copyright International Organization for Standardization
Provided by IHS under license with ISO
No reproduction or networking permitted without license from IHS Not for Resale

28.3.6 Field ID2

The Pre-pit data block configuration of Field ID2 shall be as shown in Figure 60.

Pre-pit data frame number	Bit position			
	0	1 to 4	5 (msb) to 12 (lsb)	
0	Pre-pit SYNC Code*	0000	First byte of ECC Block address	Part A
1		0001	Second byte of ECC Block address	
2		0010	Third byte of ECC Block address	
3		0011	First byte of Parity A	
4		0100	Second byte of Parity A	
5		0101	Third byte of Parity A	
6		0110	Field ID (02)	Part B
7		0111	Set to (00)	
8		1000	Set to (00)	
9		1001	First byte of Last address of Data Recordable Zone on Layer 1	
10		1010	Second byte of Last address of Data Recordable Zone on Layer 1	
11		1011	Third byte of Last address of Data Recordable Zone on Layer 1	
12		1100	Set to (00)	
13		1101	First byte of Parity B	
14		1110	Second byte of Parity B	
15		1111	Third byte of Parity B	

NOTE
The Pre-pit SYNC Code shall be added to the Pre-pit data block to construct the Pre-pit physical block

Figure 60 — Pre-pit data block configuration of Field ID2

28.3.6.1 Last address of Data Recordable Zone on Layer 1

The last ECC Block address of the Data Recordable Zone on Layer 1 shall be specified in hexadecimal notation in the Last Address of Data Recordable Zone on Layer 1 field.

The last ECC Block address shall be defined to ensure the user data capacity of 8,54 Gbytes per side for 120 mm disk, and 2,66 Gbytes per side for 80 mm disk respectively.

The Last address of Data Recordable Zone on Layer 1 does not indicate the minimum ECC Block address of the disk but indicates the inner limit of the Data Recordable Zone. The Pre-pit physical block on Layer 1 shall extend toward the inner diameter of the disk, beyond the zone indicated by the last address of Data Recordable Zone on Layer 1.

This field shall be set more than or equal to (00332A).When NBCA is applied, this field shall be set more than or equal to (003370).

28.3.7 Field ID3 and Field ID4

The Pre-pit data block configuration of Field ID3 and Field ID4 shall be as shown in Figures 61 and 62.

This Ecma Standard does not specify the content of the 12 bytes designated as Manufacturer ID. Unless otherwise agreed to by the interchange parties, this content shall be ignored in interchange.

--`,,```,,,,````-`-`,,`,,`,`,,`---

Copyright International Organization for Standardization
Provided by IHS under license with ISO
No reproduction or networking permitted without license from IHS
Not for Resale

Pre-pit data frame number	Bit position			
	0	1 to 4	5 (msb) to 12 (lsb)	
0	Pre-pit SYNC Code*	0000	First byte of ECC Block address	Part A
1		0001	Second byte of ECC Block address	
2		0010	Third byte of ECC Block address	
3		0011	First byte of Parity A	
4		0100	Second byte of Parity A	
5		0101	Third byte of Parity A	
6		0110	Field ID (03)	Part B
7		0111	First byte of Manufacturer ID	
8		1000	Second byte of Manufacturer ID	
9		1001	Third byte of Manufacturer ID	
10		1010	Fourth byte of Manufacturer ID	
11		1011	Fifth byte of Manufacturer ID	
12		1100	Sixth byte of Manufacturer ID	
13		1101	First byte of Parity B	
14		1110	Second byte of Parity B	
15		1111	Third byte of Parity B	

*NOTE
The Pre-pit SYNC Code shall be added to the Pre-pit data block to construct the Pre-pit physical block

Figure 61 — Pre-pit data block configuration of Field ID3

Pre-pit data frame number	Bit position			
	0	1 to 4	5 (msb) to 12 (lsb)	
0	Pre-pit SYNC Code*	0000	First byte of ECC Block address	Part A
1		0001	Second byte of ECC Block address	
2		0010	Third byte of ECC Block address	
3		0011	First byte of Parity A	
4		0100	Second byte of Parity A	
5		0101	Third byte of Parity A	
6		0110	Field ID (04)	Part B
7		0111	Seventh byte of Manufacturer ID	
8		1000	Eighth byte of Manufacturer ID	
9		1001	Ninth byte of Manufacturer ID	
10		1010	Tenth byte of Manufacturer ID	
11		1011	Eleventh byte of Manufacturer ID	
12		1100	Twelfth byte of Manufacturer ID	
13		1101	First byte of Parity B	
14		1110	Second byte of Parity B	
15		1111	Third byte of Parity B	

*NOTE
The Pre-pit SYNC Code shall be added to the Pre-pit data block to construct the Pre-pit physical block

Figure 62 — Pre-pit data block configuration of Field ID4

Copyright International Organization for Standardization
Provided by IHS under license with ISO
No reproduction or networking permitted without license from IHS
Not for Resale

28.3.8 Field ID5

The Pre-pit data block configuration of Field ID5 shall be as shown in Figure 63.

Pre-pit data frame number	Bit Position			
	0	1 to 4	5 (msb) to 12 (lsb)	
0	Pre-pit SYNC Code*	0000	First byte of ECC Block address	Part A
1		0001	Second byte of ECC Block address	
2		0010	Third byte of ECC Block address	
3		0011	First byte of Parity A	
4		0100	Second byte of Parity A	
5		0101	Third byte of Parity A	
6		0110	Field ID (05)	Part B
7		0111	Set to (00)	
8		1000	Set to (00)	
9		1001	Set to (00)	
10		1010	Set to (00)	
11		1011	Set to (00)	
12		1100	Set to (00)	
13		1101	First byte of Parity B	
14		1110	Second byte of Parity B	
15		1111	Third byte of Parity B	

**NOTE*
The Pre-pit SYNC Code shall be added to the Pre-pit data block to construct the Pre-pit physical block

Figure 63 — Pre-pit data block configuration of Field ID5

DRAFT

Copyright International Organization for Standardization
Provided by IHS under license with ISO
No reproduction or networking permitted without license from IHS
Not for Resale

29 Data structure of R-Information Zone and ODTA

29.1 Layout of Disk Testing Area and Recording Management Area

The Inner Disk Testing Area (IDTA) and the Recording Management Area (RMA) on each layer are located in the R-Information Zone and situated adjacent to the inside of the Lead-in Zone and the Lead-out Zone, respectively.

Outer Disk Testing Area (ODTA) is situated adjacent to the outside of the fixed Middle Zone.

See Figure 64.

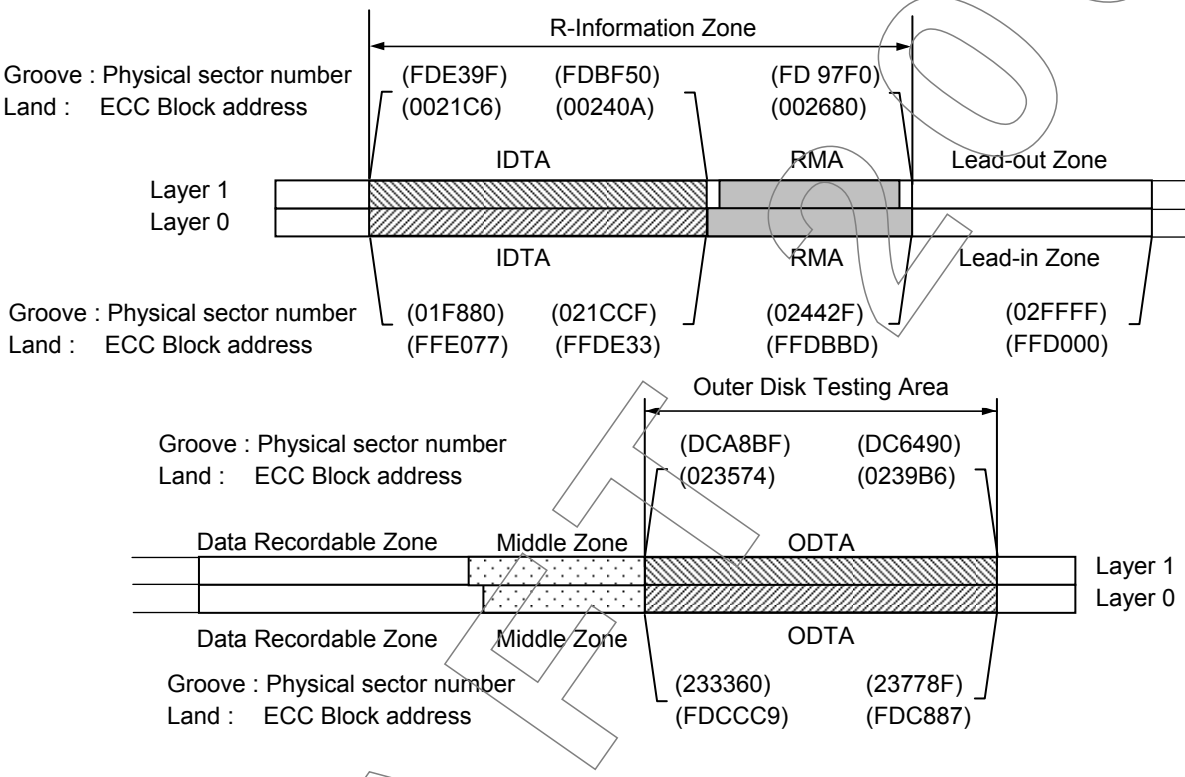

Figure 64 — Address layout of the R-Information Zone and ODTA

29.2 Structure of the Disk Testing Area

The Inner Disk Testing Area shall be located from ECC Block address (FFE077) to (FFDE33) on Layer 0 and from (00240A) to (0021C6) on Layer 1. See Figure 65.

The Outer Disk Testing Area shall be located from ECC Block address (FDCCC9) to (FDC887) on Layer 0 and from (0239B6) to (023574) on Layer 1. See Figure 66.

When the shifted Middle Zone is applied, the start sector number of shifted Middle Zone shall be set in the RMD Field0. See 29.3.2.1.1 (Bytes 86 to 89) and 29.3.2.2.1 (Bytes 86 to 89).

When the address X is set to the Last address of Data Recordable Zone on Layer 0 in the pre-pit data block Field ID1, the shifted Middle Zone shall be located inner than or equal to X+(AC1) on Layer 0 and $\overline{X}$ - (AC1) on Layer 1 respectively.

When the address Y is the Last address of Data Recordable Zone according to adoption of the shifted Middle Zone, the shifted Middle Zone shall be located as shown in Table 36.

When the shifted Middle Zone is applied, the outer diameter of Information Zone shall satisfy the requirement as described in 10.7. Therefore, if the diameter of the address Y is smaller than 69.2 mm, the shifted Middle Zone shall be located up to 70.0 mm. The shifted Middle area shall be located as shown in Table 36.

Copyright International Organization for Standardization
Provided by IHS under license with ISO
No reproduction or networking permitted without license from IHS
Not for Resale

Table 36 — Allocation of shifted Middle Zone

	Diameter of address Y	shifted Middle Zone
Layer 0	< ϕ 69.2	(Y–1) to (FF5549)
	≥ ϕ 69.2	(Y – 1) to (Y – 883)
Layer 1	< ϕ 69.2	(00ACF4) to ($\overline{Y}$ + 1)
	≥ ϕ 69.2	($\overline{Y}$ + AC1) to ($\overline{\overline{Y}}$ + 1)

Disk Testing Area on one layer shall not be overlapped by the Disk Testing Area on the other layer.Therefore Gap in radial direction shall be allocated between the Disk Testing Area on each layer, and the position of Gap shall be flexible according the usage of each Disk Testing Area.

In each Disk Testing Area, the recording power calibration shall be performed by the following procedure.

The minimum segment for a power calibration shall be one Pre-pit Physical sector and is referred to as a power calibration sector. The power calibration process shall be performed continuously from the start to the end of the power calibration sector.

It is recommended that signal with enough readout amplitude should be recorded at the sector taking the largest address value in the used sectors on each power calibration process to find out the boundary with unused area easily. The signal should have a length of at least 4 consecutive Sync frames of power calibration sector and at least 0.5 of Modulation amplitude (I_{14}/I_{14H}) or equivalent. See Figure 13.

This signal should be recorded at the sector taking the largest address value in the used sectors, and at least once in every 32 consecutive sectors.

The IDTA shall consist of 581 ECC blocks (9 296 sectors) per each Layer. When Gap locates in the IDTA, the size of Gap and usable area for OPC in IDTA are 257 ECC blocks (4 112 sectors) and 324 ECC blocks (5 184 sectors) respectively.

The ODTA shall consist of 1091 ECC blocks (17456 sectors) per each layer. When Gap locates in the ODTA, the size of Gap and usable area for OPC in ODTA are 676ECC blocks (10816 sectors) and 415 ECC Blocks (6640 sectors) respectively.

The structure of the Disk Testing Area shall be as shown in Figure 65 and Figure 66.

The power calibration of Layer 0 shall be performed from the outside to the inside of the disk, and the power calibration of Layer 1 shall be performed from the inside to the outside of the disk.

16 ECC blocks (256 power calibration sectors) in the most outer side of the IDTA on Layer 0 shall be reserved for the disk manufacturer. The IDTA for drive shall consist of 4928 power calibration sectors.

16 ECC blocks (256 power calibration sectors) in the most inner side of the ODTA on Layer 1 shall be reserved for the disk manufacturer. The ODTA for drive shall consist of 6 384 power calibration sectors.

The power calibration process for disk manufacturer shall be user specific, but it is recommended that at least outer 8 ECC blocks in the IDTA on Layer 0 and inner 8ECC blocks in the ODTA on Layer 1 should be kept unrecorded state to make stable the recordings of the first RMD and the first Middle Zone, respectively.

Copyright International Organization for Standardization
Provided by IHS under license with ISO
No reproduction or networking permitted without license from IHS
Not for Resale

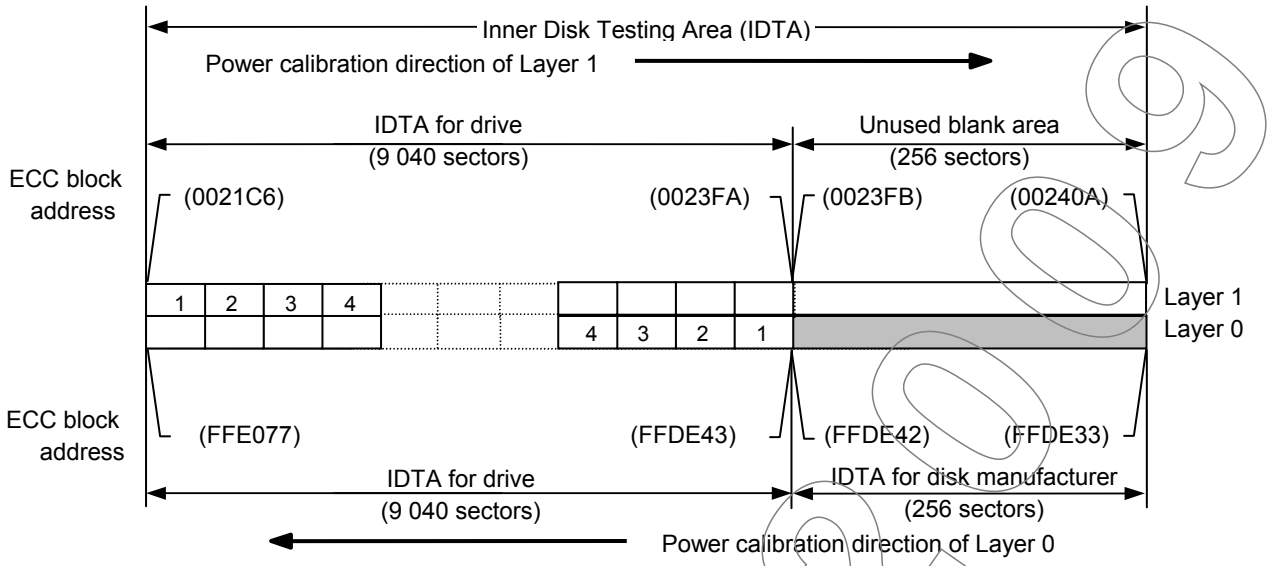

Figure 65 — Structure of Inner Disk Testing Area

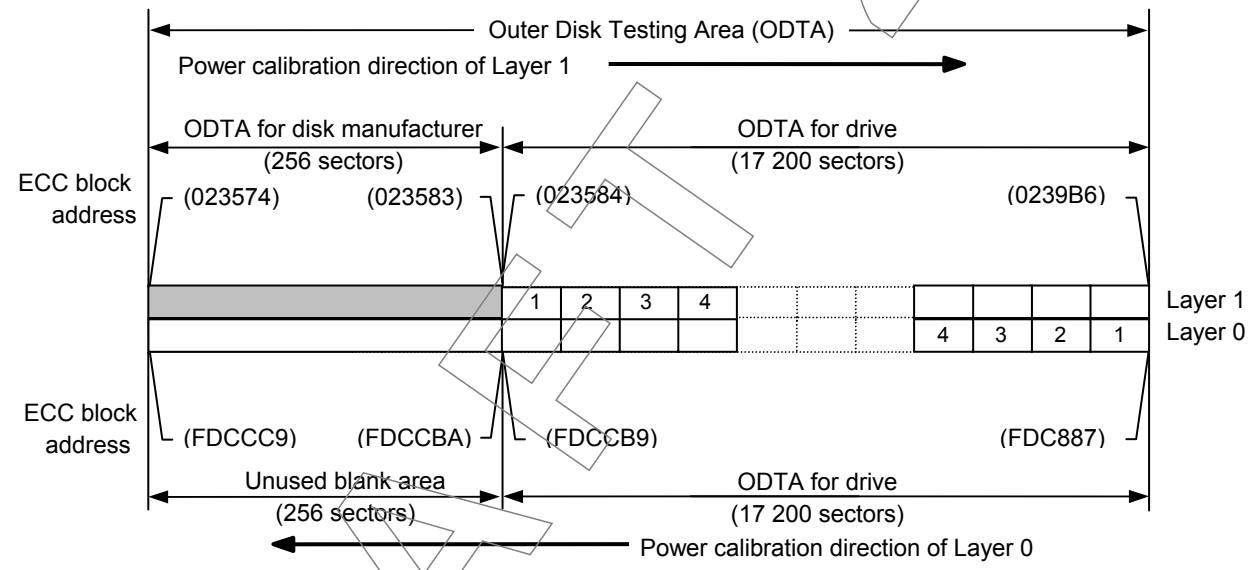

Figure 66 — Structure of Outer Disk Testing Area

29.3 Data configuration of the Recording Management Area (RMA)

29.3.1 Sector format of the Recording Management Area

The Recording Management Area shall be located from ECC Block address (FFDE31) to (FFDBBD) on Layer 0 and (0025A2) to (0024E6) on Layer 1. The RMA shall be constructed with a RMA Lead-in and five RMA Segments and the other areas.

The RMA Segment #1 to #4 shall be located on Layer 0 and the RMA Segment #5 shall be located on Layer 1 as shown in Figure 67. See 29.3.2.

68 ECC blocks following the RMA Segment #4 on Layer 0 shall be recorded with (00) before the RMA Segment #5 is used, in order to keep the Recording order.

48 ECC blocks following RMA Segment #5 on Layer 1 is Drive specific area and may be kept in unrecorded state.

The unused area located on both sides of the RMA on Layer 1 shall not be used for recordings to keep the Recording order.

Copyright International Organization for Standardization
Provided by IHS under license with ISO
No reproduction or networking permitted without license from IHS
Not for Resale

The size in bytes of the RMA Lead-in is 32 768 bytes and is constructed with the System Reserved Field of size 16 384 bytes and the Unique Identifier (ID) Field of size 16 384 bytes.

The data in the System Reserved Field shall be set to (00).

The Unique ID Field shall be constructed with eight units which have the same 2 048 bytes size and contents. The byte assignment of each unit shall be as shown in Table 37.

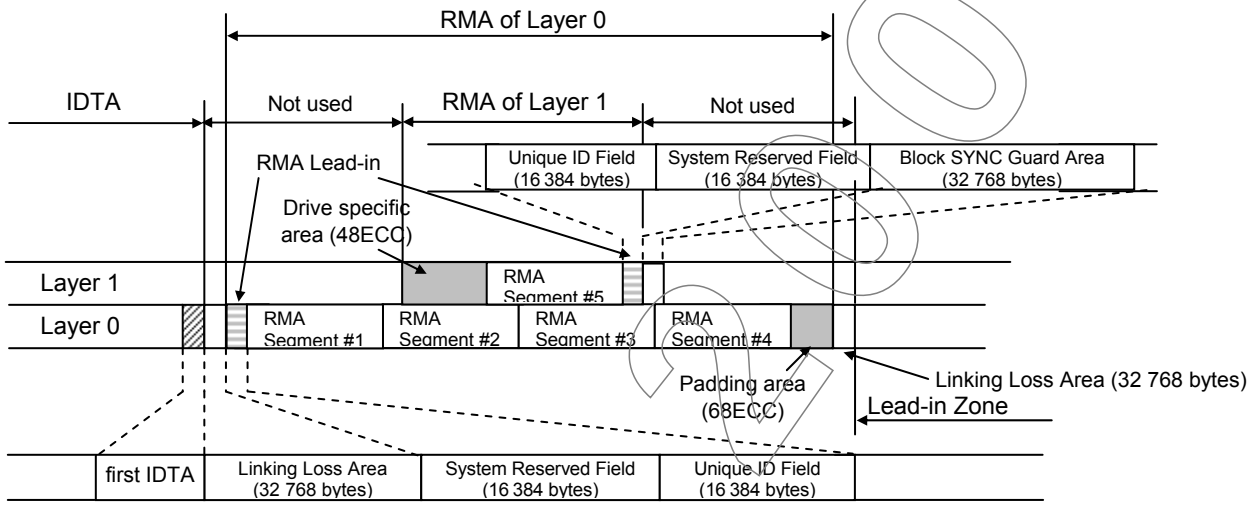

Figure 67 — Layout of the Recording Management Area

Table 37 — Contents of Unique ID Field

BP	Content
0 to 31	Drive manufacturer ID
32 to 39	Set to (00)
40 to 55	Serial Number
56 to 63	Set to (00)
64 to 79	Model Number
80 to 87	Set to (00)
88 to 105	Unique Disk ID
106 to 2 047	Set to (00)

Bytes 0 to 31 – Drive manufacturer ID

This Ecma Standard does not specify the content of these 32 bytes. Unless otherwise agreed to by the interchange parties, this content shall be ignored in interchange.

Bytes 32 to 39

These bytes shall be set to (00).

Bytes 40 to 55 - Serial number

This Ecma Standard does not specify the content of these 16 bytes. Unless otherwise agreed to by the interchange parties, this content shall be ignored in interchange.

Bytes 56 to 63

These bytes shall be set to (00).

Bytes 64 to 79 - Model number

This Ecma Standard does not specify the content of these 16 bytes. Unless otherwise agreed to by the interchange parties, this content shall be ignored in interchange.

Copyright International Organization for Standardization
Provided by IHS under license with ISO
No reproduction or networking permitted without license from IHS
Not for Resale

Bytes 80 to 87

These bytes shall be set to (00).

Bytes 88 to 105 - Unique Disk ID

This Ecma Standard does not specify the content of these 18 bytes. Unless otherwise agreed to by the interchange parties, this content shall be ignored in interchange.

Bytes 106 to 2 047

These bytes shall be set to (00).

29.3.2 Logical data structure of RMA

DVD-RW for DL has Restricted Overwrite mode only, and Layer jump functionality is added to that for the Single Layer DVD-RW.

The logical data structure of RMA shall be constructed with 5 RMA Segments. Each RMA Segment shall consist of 28 RMD (Recording Management Data) Sets. Each RMD Set shall consist of 5 RMD Blocks. The RMD Set#1 of each RMA Segment shall be used for Format2 RMD and the other RMD Sets shall be used for Format3 RMD. See 29.3.3.

The contents of all 5 RMD Blocks in an RMD Set shall be equivalent except the RBG field.

The logical data structure of RMA is as shown in Figure 68.

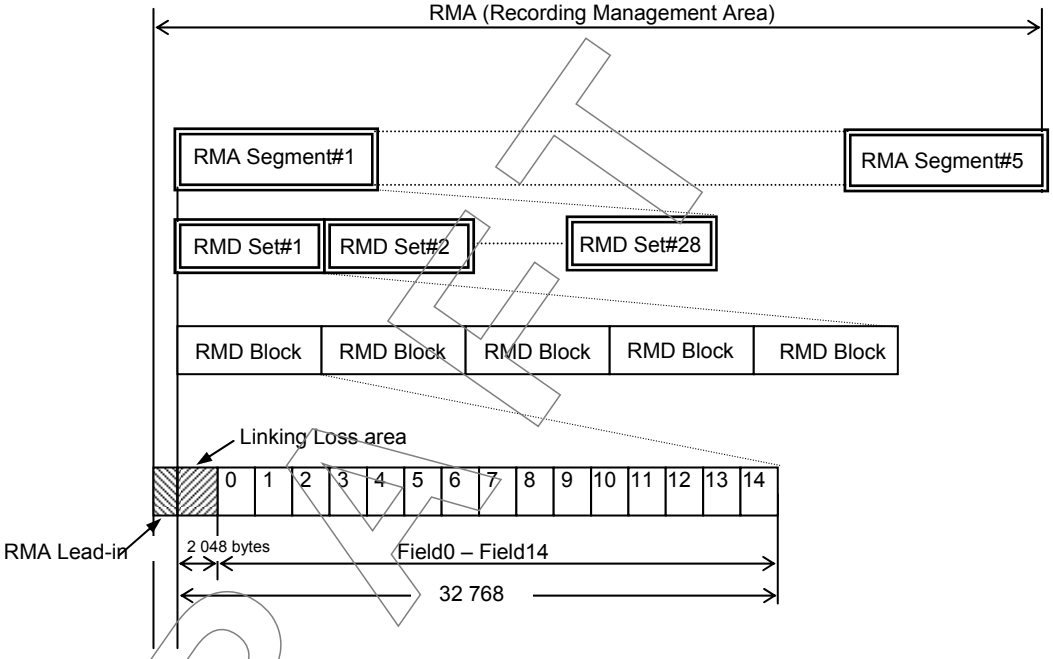

Figure 68 — Logical data structure of RMA

29.3.3 Recording Management Data (Format2 RMD and Format3 RMD)

Recording Management Data (RMD) shall contain the information for recordings on the disk. Two kinds of RMD format are specified for a DVD-RW for DL disk and each RMD format shall include the following information.

Format2 RMD: The information of Pointer to indicate the valid Format3 RMD Set in the same RMA Segment.

Format3 RMD: The information related to Restricted Overwrite recording mode including Layer jump recording mode.

The structure of each RMD format shall be as shown in Table 38.

Copyright International Organization for Standardization
Provided by IHS under license with ISO
No reproduction or networking permitted without license from IHS
Not for Resale

Table 38 — Data structure of Format2 RMD and Format3 RMD

Sector number	RMD Field	Structure	
		Format2	Format3
Sector0	Linking Loss Area	Linking Loss Area	
Sector1	Field0	Common information*	
Sector2	Field1	Pointer to RMD Set	OPC related information
Sector3	Field2	Set to (00)	User specific data
Sector4	Field3		Recording status information
Sector5	Field4		Defect Status Bitmap
Sector6	Field5		
Sector7	Field6		
Sector8	Field7		
Sector9	Field8		
Sector10	Field9		
Sector11	Field10		
Sector12	Field11		
Sector13	Field12		
Sector14	Field13		Drive specific information
Sector15	Field14		Disk Testing Area information

NOTE
Except Bytes 86 to 107

29.3.3.1 Format2 RMD

Format2 RMD shall include the disk information, the Format3 RMD Set pointer and the RMD Segment status information.

RMD Set pointer shall be used to point the Format3 RMD Set in the RMA Segment and the latest Format2 RMD shall include the pointer to a current valid Format3 RMD Set.

29.3.3.1.1 Format2 RMD Field0

Format2 RMD Field0 shall specify general information of the disk and the contents of this field shall be as specified in Table 39.

Table 39 — Format2 RMD Field0

BP	Contents	Number of bytes
0 and 1	RMD format	2
2	Disk status	1
3	Set to (00)	1
4 to 21	Unique Disk ID	18
22 to 85	Copy of Pre-pit Information	64
86 to 127	Set to (00)	42
128	RBG Information	1
129 to 2047	Set to (00)	1919

Bytes 0 and 1 - RMD format

These bytes shall be set to (0002).

Copyright International Organization for Standardization
Provided by IHS under license with ISO
No reproduction or networking permitted without license from IHS
Not for Resale

Byte 2 - Disk status

This field shall specify the disk status and shall be set to (10) to indicate that the disk is in the Restricted Overwrite mode.

Other settings are prohibited by this Ecma Standard.

Byte 3

This byte shall be set to (00).

Bytes 4 to 21- Unique Disk ID

This Ecma Standard does not specify the content of these 18 bytes. Unless otherwise agreed to by the interchange parties, this content shall be ignored in interchange.

Bytes 22 to 85 - Copy of Pre-pit Information

The copy of Pre-pit Information that is specified in 28.3 shall be recorded in this field. The recording format shall be as shown in Table 40.

Table 40 — Copy of Pre-pit Information

BP	Contents	
22	Field ID set to (01)	
23	Application code	
24	Disk physical code	
25 to 27	Last address of Data Recordable Zone on Layer 0	
28	Part Version	Extension code
29	Set to (00)	
30	Field ID set to (02)	
31 to 32	Set to (00)	
33 to 35	Last address of Data Recordable Zone on Layer 1	
36 to 37	Set to (00)	
38	Field ID set to (03)	
39 to 44	1st field of Manufacturer ID	
45	Set to (00)	
46	Field ID set to (04)	
47 to 52	2nd field of Manufacturer ID	
53	Set to (00)	
54	Field ID set to (05)	
55 to 60	Set to (00)	
61 to 85	Set to (00)	

Bytes 86 to 127

These bytes shall be set to (00).

Byte 128 – RMD Block Group (RBG) Information

This field shall specify the recording condition of RMD Block Group.

Bits b_0 to b_3 shall specify the RBG length, and bits b_4 to b_7 shall specify the RBG number.

The RBG length of all RMD Sets shall be set to 5. The RBG number of RMD Block in an RMD Set shall be increased sequentially from 1 to 5.

When some RMD Blocks are recorded as an RBG, the RMD blocks shall include the same RBG length value. The RBG length shall specify the number of the RMD Blocks of which an RBG consists.

Copyright International Organization for Standardization
Provided by IHS under license with ISO
No reproduction or networking permitted without license from IHS
Not for Resale

The RBG number value in the RMD Blocks of an RBG shall be increased by 1 up to the RBG length value.

Bytes 129 to 2047

These bytes shall be set to (00).

29.3.3.1.2 Format2 RMD Field1

Format2 RMD Field1 shall contain the pointer to the start address of the RMD Set that contains Format3 RMD Blocks in the same RMA Segment. See Table 41.

Table 41 — Format2 RMD Field1

BP	Contents	Number of bytes
0 to 3	Update Counter	4
4 to 7	Format3 RMD Set pointer	4
8 to 15	reserved	8
16 to 19	RSDS #n	4
20 to 2047	reserved	2028

Bytes 0 to 3 - Update Counter

This field shall specify how many times this RMD Set is rewritten.

The initial value of the Update Counter shall be 0. When this field is rewritten, the value of this field shall be incremented by 1. When RMA Segments are changed, the Update Counter value is taken over and incremented and shall be specified in the Update Counter field of the next RMA Segment.

Bytes 4 to 7 - Format3 RMD Set pointer

This field shall specify the start Physical sector number of the latest Format3 RMD Set in this RMA Segment.

Bytes 8 to 15

These bytes shall be set to (00).

Bytes 16 to 19 - RSDS (RMA Segment Defect Status) #n (n = 2, …, 28)

The RSDS bit shall specify the status of the Format3 RMD Set in this RMA Segment.

ZERO: To indicate that RMD Set #n of the RMA Segment is non-defective. If EDC errors occur in at most 2 RMD Blocks of an RMD Set, the RMD Set is non-defective.

ONE: To indicate that RMD Set #n of the RMA Segment is defective. If EDC errors occur in at least 3 RMD Blocks of an RMD Set, the RMD Set is defective.

The data format of these fields shall be as shown in Table 41.

Table 41 — Format2 RMD Field1

BP	b7	b6	b5	b4	b3	b2	b1	b0
16	RSDS #8	RSDS #7	RSDS #6	RSDS #5	RSDS #4	RSDS #3	RSDS #2	Set to ZERO
17	RSDS #16	RSDS #15	RSDS #14	RSDS #13	RSDS #12	RSDS #11	RSDS #10	RSDS #9
18	RSDS #24	RSDS #23	RSDS #22	RSDS #21	RSDS #20	RSDS #19	RSDS #18	RSDS #17
19	Set to ZERO	Set to ZERO	Set to ZERO	Set to ZERO	RSDS #28	RSDS #27	RSDS #26	RSDS #25

Bytes 20 to 2047

These bytes shall be set to (00).

Copyright International Organization for Standardization
Provided by IHS under license with ISO
No reproduction or networking permitted without license from IHS
Not for Resale

29.3.3.1.3 Format2 RMD Field2

All bytes in this field shall be set to (00).

29.3.3.1.4 Format2 RMD Field3 to Field14

All bytes in this field shall be set to (00).

29.3.3.2 Format3 RMD

Format3 RMD shall be used in Restricted Overwrite mode including Layer jump recording mode.

29.3.3.2.1 Format3 RMD Field0

Format3 RMD Field0 shall specify general information of the disk and the contents of this field shall be as specified in Table 42.

Table 42 — Format3 RMD Field0

BP	Contents	Number of
0 and 1	RMD format	2
2	Disk status	1
3	Set to (00)	1
4 to 21	Unique Disk ID	18
22 to 85	Copy of Pre-pit Information	64
86 to 89	Start sector number of the Middle Zone	4
90	Pre-recorded/Embossed information code	1
91	Set to (00)	1
92 to 95	End address of pre-recorded/embossed Lead-in Zone	4
96 to 99	End address of pre-recorded/embossed Middle Zone on Layer 0	4
100 to 103	Start address of pre-recorded/embossed Middle Zone on Layer 1	4
104 to 107	Start address of pre-recorded/embossed Lead-out Zone	4
108 to 127	Set to (00)	20
128	RBG Information	1
129 to 2047	Set to (00)	1919

Bytes 0 and 1 - RMD format

These bytes shall be set to (0003).

Byte 2 - Disk status

This field shall specify the disk status. The most significant bit of this field indicates whether the disk is write-protected or not. If the write protected status is not matched with the information of write-inhibit hole in the case, the final status shall be write-protected.

If set to (00), they specify that the disk is in the Blank state. The disk has no written data in the Data Recordable Zone. (only RMDs are written)
If set to (11), they specify that format operation is in progress.
If set to (12), they specify that the disk is in the complete state.
If set to (13), they specify that the disk is in the intermediate state.
If set to (80), they specify that the disk has no written data in the Data Recordable Zone. (only RMDs are written) and write protected except R-Information Zone.
If set to (92), they specify that the disk is in the complete state and write-protected except R-Information Zone.
If set to (93), they specify that the disk is in the intermediate state and write-protected except R-Information Zone.
Other settings are prohibited by this Ecma Standard.

Copyright International Organization for Standardization
Provided by IHS under license with ISO
No reproduction or networking permitted without license from IHS
Not for Resale

Byte 3

This byte shall be set to (00).

Byte 4 to byte 21- Unique Disk ID

This Ecma Standard does not specify the content of these 18 bytes. Unless otherwise agreed to by the interchange parties, this content shall be ignored in interchange.

Byte 22 to byte 85 - Copy of Pre-pit Information

The copy of Pre-pit Information that is specified in 28.3 shall be recorded in this field. The recording format shall be as shown in Table 43.

Table 43 — Copy of Pre-pit Information

BP	Contents	
22	Field ID set to (01)	
23	Application code	
24	Disk physical code	
25 to 27	Last address of Data Recordable Zone on Layer 0	
28	Part Version	Extension code
29	Set to (00)	
30	Field ID set to (02)	
31 to 32	Set to (00)	
33 to 35	Last address of Data Recordable Zone on Layer 1	
36 to 37	Set to (00)	
38	Field ID set to (03)	
39 to 44	1st field of Manufacturer ID	
45	Set to (00)	
46	Field ID set to (04)	
47 to 52	2nd field of Manufacturer ID	
53	Set to (00)	
54	Field ID set to (05)	
55 to 85	Set to (00)	

Byte 86 to byte 89 – Start sector number of the Middle Zone

These bytes shall specify the Start sector number of the Middle Zone when the Middle Zone is logically applied.

This field shall specify the Start sector number of the fixed Middle Zone when the fixed Middle Zone is applied.

If the Middle Zone is not applied, these bytes shall be set to (00).

Byte 90 – Pre-recorded/Embossed information code

This byte shall specify the pre-recorded or embossed area on a disk. The areas specified in Table 44 can be pre-recorded by a recording device except the areas pre-recorded or embossed by disk manufacturers.

Bit b_0 shall be set to ZERO to indicate Control Data Zone is embossed.

Bit b_1 shall be set to indicate the pre-recording/embossed status of Lead-in Zone.

Bit b_1 shall be set to ZERO when Lead-in Zone is neither pre-recorded nor embossed.

Bit b_1 shall be set to ONE when Lead-in Zone is pre-recorded or embossed.

DRAFT 2009

Copyright International Organization for Standardization
Provided by IHS under license with ISO
No reproduction or networking permitted without license from IHS
Not for Resale

Bit b_2 shall be set to indicate the pre-recording/embossed status of Middle Zone.

Bit b_2 shall be set to ZERO when Middle Zone is neither pre-recorded nor embossed.

Bit b_2 shall be set to ONE when Middle Zone is pre-recorded or embossed.

Bit b_3 shall be set to indicate the pre-recording/embossed status of Lead-out Zone.

Bit b_3 shall be set to ZERO when Lead-out Zone is neither pre-recorded nor embossed.

Bit b_3 shall be set to ONE when Lead-out Zone is pre-recorded or embossed.

Bit b_4 shall be set to indicate the status of Middle Zone.

Bit b_4 shall be set to ZERO when Middle Zone does not exist.

Bit b_4 shall be set to ONE when Middle Zone exists.

Bits b_5 to b_7 shall be set to ZERO.

Table 44 — Pre-recorded/Embossed areas

Areas	ECC Block address
Initial Zone in Lead-in Zone	(FFDBBB) to (FFD1E0) (without NBCA) (FFD2A4) to (FFD1E0) (with NBCA)
Fixed Middle Zone	X-1 to (FDCF6D) and (023573) to $\overline{X-1}$ (for a 120 mm disk) X-1 to (FF2F22) and (00D4D6) to $\overline{X-1}$ (for an 80 mm disk)
Lead-out Zone	Y-1 to (002942) (without NBCA) Y-1 to (002F99) (with NBCA)

NOTE
X is the Last address of Data Recordable Zone on Layer 0 specified in the pre-pit information for Pre-pit data block of Field ID1. See 28.3.5.

Y is the Last address of Data Recordable Zone on Layer 1 specified in the pre-pit information for Pre-pit data block of Field ID2. See 28.3.6.

Byte 91

This byte shall be set to (00).

Bytes 92 to 95 - End address of pre-recorded/embossed Lead-in Zone

These bytes shall specify the end ECC Block address of the pre-recorded or embossed Lead-in Zone.

When Bit b_1 of Byte 40 in the Embossed Physical format information is set to ONE, this field shall be set to (FFD1E0) as shown in Table 44 and Bit $b_1$of Byte 90 in Format3 RMD Field0 shall be set to ONE. In this case, no pre-recording of the Lead-in Zone by a recording device shall be permitted. See 26.1.6.1.

When Bit b_1 of Byte 40 in the Embossed Physical format information is set to ZERO, a recording device can pre-record the Lead-in Zone incrementally according to the following process.

1. In the case that all bytes of this field is set to (00), a recording device shall record from (FFDBBB) (without NBCA) or (FFD2A4) (with NBCA) as shown in Table 44 toward the outer side of a disk. After recording, the end address of embossed Lead-in Zone shall be set in this field.

If no pre-recording of the Lead-in area proceeds, all bytes of this field shall be set to (00).

2. A recording device shall record from the next address stored in this field toward (FFD1E0) as shown in Table 44 incrementally.

Copyright International Organization for Standardization
Provided by IHS under license with ISO
No reproduction or networking permitted without license from IHS
Not for Resale

3. When pre-recording of the Lead-in area is completed to (FFD1E0), this field shall be set to (FFD1E0) and Bit b_1 of Byte 90 in Format3 RMD Field0 shall be set to ONE. In this case, no further pre-recording of the Lead-in Zone shall be permitted.

If no additional pre-recording of the Lead-in Zone proceeds, the same address as the previous one shall be assigned in this field.

Bytes 96 to 99 - End address of pre-recorded/embossed Middle Zone on Layer 0

These bytes shall specify the end ECC Block address of the pre-recorded or embossed Middle Zone on Layer 0.

When Bit b_2 of Byte 40 in the Embossed Physical format information is set to ONE, this field shall be set to (FDCF6D) (for 12 cm disk) or (FF2F22) (for 8 cm disk) as shown in Table 44 and Bit b_2 of Byte 90 in Format3 RMD Field0 shall be set to ONE. In this case, no pre-recording of the fixed Middle Zone by a recording device shall be permitted. See 26.1.6.1.

When Bit b_2 of Byte 40 in the Embossed Physical format information is set to ZERO, a recording device can pre-record the fixed Middle Zone on Layer 0 incrementally according to the following process.

1. In the case that all bytes of this field are set to (00), a recording device shall record from X–1 as shown in Table 44 toward the outer side of a disk. After recording, the end address of pre-recorded fixed Middle Zone on Layer 0 shall be set in this field.
If no pre-recording of the fixed Middle Zone on Layer 0 proceeds, all bytes of this field shall be set to (00).

2. A recording device shall record from the next address stored in this field toward (FDCF6D) (for 12 cm disk) or (FF2F22) (for 8 cm disk) as shown in Table 44 incrementally.

3. When the pre-recording of the fixed Middle area on Layer 0 is completed to (FDCF6D) (for 12 cm disk) or (FF2F22) (for 8 cm disk), this field shall be set to (FDCF6D) (for 12 cm disk) or (FF2F22) (for 8 cm disk) and no further pre-recording of the fixed Middle Zone on Layer 0 shall be permitted.

4. If this field is set to (FDCF6D) (for 12 cm disk) or (FF2F22) (for 8 cm disk) and the Start address of pre-recorded fixed Middle Zone on Layer 1 specified at Bytes 100 to 103 is set to (023573) (for 12 cm disk) or (00D4D6) (for 8 cm disk), Bit b_2 of Byte 90 in Format3 RMD Field0 shall be set to ONE.

If no additional pre-recording of the fixed Middle Zone on Layer 0 proceeds, the same address as the previous one shall be assigned in this field.

Bytes 100 to 103 - Start address of pre-recorded/embossed Middle Zone on Layer 1

These bytes shall specify the start ECC Block address of the pre-recorded or embossed Middle Zone on Layer 1.

When Bit b_2 of Byte 40 in the Embossed Physical format information is set to ONE, this field shall be set to (023573) (for 12 cm disk) or (00D4D6) (for 8 cm disk) as shown in Table 44 and Bit b_2 of Byte 90 in Format3 RMD Field0 shall be set to ONE. In this case, no pre-recording of the fixed Middle Zone by a recording device shall be permitted. See 26.1.6.1.

When Bit b_2 of Byte 40 in the Embossed Physical format information is set to ZERO, a recording device can pre-record the fixed Middle Zone on Layer 1 incrementally according to the following process.

1. In the case that all bytes of this field is set to (00), a recording device shall record from the Start address of pre-recorded fixed Middle Zone on Layer 1 to be assigned in this field to $\overline{X-1}$ as shown in Table 44.

If no pre-recording of the fixed Middle Zone on Layer 1 proceeds, all bytes of this field shall be set to (00).

Copyright International Organization for Standardization
Provided by IHS under license with ISO
No reproduction or networking permitted without license from IHS
Not for Resale

2. A recording device shall record from the new Start address of pre-recorded fixed Middle Zone on Layer 1 to be assigned in this field to the previous Start address of pre-recorded fixed Middle Zone on Layer 1 incrementally.

3. When the pre-recording of the fixed Middle Zone on Layer 1 is completed from (023573) (for 12 cm disk) or (00D4D6) (for 8 cm disk) to $\overline{X-1}$ as shown in Table 44, this field shall be set to (023573) (for 12 cm disk) or (00D4D6) (for 8 cm disk) and no further pre-recording of the fixed Middle Zone on Layer 1 shall be permitted.

4. If this field is set to (023573) (for 12 cm disk) or (00D4D6) (for 8 cm disk) and the End address of pre-recorded fixed Middle Zone on Layer 0 specified at Bytes 96 to 99 is set to (FDCF6D) (for 12 cm disk) or (FF2F22) (for 8 cm disk), Bit b_2 of Byte 90 in Format3 RMD Field0 shall be set to ONE.

If no additional pre-recording of the fixed Middle Zone on Layer 1 proceeds, the same address as the previous one shall be assigned in this field.

Bytes 104 to 107 - Start address of pre-recorded/embossed Lead-out Zone

These bytes shall specify the start ECC Block address of the pre-recorded or embossed Lead-out Zone.

When Bit b_3 of Byte 40 in the Embossed Physical format information is set to ONE, this field shall be set to Y–1 as shown in Table 44 and Bit b_3 of Byte 90 in Format3 RMD Field0 shall be set to ONE. In this case, no pre-recording of the Lead-out Zone by a recording device shall be permitted. See 26.1.6.1.

When Bit b_3 of Byte 40 in the Embossed Physical format information is set to ZERO, a recording device can pre-record the Lead-out Zone incrementally according to the following process.

1. In the case that all bytes of this field is set to (00), a recording device shall record from the Start address of pre-recorded Lead-out Zone to be assigned in this field to (002942) (without NBCA) or (002F99) (with NBCA) as shown in Table 44.

If no pre-recording of the Lead-out area proceeds, all bytes of this field shall be set to (00).

2. A recording device shall record from the new Start address of pre-recorded Lead-out Zone to be assigned in this field to the previous Start address of pre-recorded Lead-out Zone incrementally.

3. When the pre-recording of the Lead-out Zone is completed from Y–1 to (002942) (without NBCA) or (002F99) (with NBCA) as shown in Table 44, this field shall be set to Y–1 and Bit b_3 of Byte 90 in Format3 RMD Field0 shall be set to ONE. In this case, no further pre-recording of the Lead-out Zone shall be permitted.

If no additional pre-recording of the Lead-out Zone proceeds, the same address as the previous one shall be assigned in this field.

Bytes 108 to 127

These bytes shall be set to (00).

Byte 128 - RBG information

This field shall specify the recording condition of RMD Block Group. Bits b_0 to b_3 shall specify the RBG length, and bits b_4 to b_7 shall specify the RBG number.

The RBG length of all RMD Sets shall be set to 5. The RBG number of RMD Block in an RMD Set shall be increased sequentially from 1 to 5.

When some RMD Blocks are recorded as an RBG, the RMD blocks shall include the same RBG length value. The RBG length shall specify the number of the RMD Blocks of which an RBG consists. The RBG number value in the RMD Blocks of an RBG shall be increased by 1 up to the RBG length value. See 29.3.3.1.1.

Copyright International Organization for Standardization
Provided by IHS under license with ISO
No reproduction or networking permitted without license from IHS
Not for Resale

Bytes 129 to 2047

These bytes shall be set to (00).

29.3.3.2.2 Format3 RMD Field1

Format3 RMD Field1 shall contain OPC related information. In Format3 RMD Field1 it is possible to record OPC related information for up to 4 drives that may coexist in a system. See Table 45.

In the case of a single drive system, OPC related information shall be recorded in field No.1 and the other fields shall be set to (00). In every case, the unused fields of Format3 RMD Field1 shall be set to (00).

DRAFT 2009

Copyright International Organization for Standardization
Provided by IHS under license with ISO
No reproduction or networking permitted without license from IHS
Not for Resale

Table 45 — Format3 RMD Field1

BP	Contents		Number of bytes
0 to 31	No. 1	Drive manufacturer ID	32
32 to 47		Serial number	16
48 to 63		Model number	16
64 to 71		2x-speed Write Strategy code for Layer 0	8
72 to 79		Set to (00)	8
80 to 83		Recording power	4
84 to 91		Time stamp	8
92 to 95		Power calibration address	4
96 to 107		Running OPC information	12
108 to 117		2x-speed Write Strategy code for Layer 1 with 2T multi pulse	10
118 to 125		2x-speed Write Strategy code for Layer 1	8
126 to 127		Set to (00)	2
128 to 159	No.2	Drive manufacturer ID	32
160 to 175		Serial number	16
176 to 191		Model number	16
192 to 199		2x-speed Write Strategy code for Layer 0	8
200 to 207		Set to (00)	8
208 to 211		Recording power	4
212 to 219		Time stamp	8
220 to 213		Power calibration address	4
224 to 235		Running OPC information	12
236 to 245		2x-speed Write Strategy code for Layer 1 with 2T multi pulse	10
246 to 251		2x-speed Write Strategy code for Layer 1	8
254 to 255		Set to (00)	2
256 to 287	No.3	Drive manufacturer ID	32
288 to 303		Serial number	16
304 to 319		Model number	16
320 to 327		2x-speed Write Strategy code for Layer 0	8
328 to 335		Set to (00)	8
336 to 339		Recording power	4
340 to 347		Time stamp	8
348 to 351		Power calibration address	4
352 to 363		Running OPC information	12
364 to 373		2x-speed Write Strategy code for Layer 1 with 2T multi pulse	10
374 to 381		2x-speed Write Strategy code for Layer 1	8
382 to 383		Set to (00)	2
384 to 415	No.4	Drive manufacturer ID	32
416 to 431		Serial number	16
432 to 447		Model number	16
448 to 455		2x-speed Write Strategy code for Layer 0	8
456 to 463		Set to (00)	8
464 to 467		Recording power	4
468 to 475		Time stamp	8
476 to 479		Power calibration address	4
480 to 491		Running OPC information	12
492 to 501		2x-speed Write Strategy code for Layer 1 with 2T multi pulse	10
502 to 509		2x-speed Write Strategy code for Layer 1	8
510 to 511		Set to (00)	2
512 to 2047	Set to (00)		1 536

Copyright International Organization for Standardization
Provided by IHS under license with ISO
No reproduction or networking permitted without license from IHS
Not for Resale

Bytes 0 to 31, 128 to 159, 256 to 287, 384 to 415 – Drive manufacturer ID

This Ecma Standard does not specify the content of these fields. Unless otherwise agreed to by the interchange parties, this content shall be ignored in interchange.

Bytes 32 to 47, 160 to 175, 288 to 303, 416 to 431 – Serial number

This Ecma Standard does not specify the content of these fields. Unless otherwise agreed to by the interchange parties, this content shall be ignored in interchange.

Bytes 48 to 63, 176 to 191, 304 to 319, 432 to 447 – Model number

This Ecma Standard does not specify the content of these fields. Unless otherwise agreed to by the interchange parties, this content shall be ignored in interchange.

Bytes 64 to 71, 192 to 199, 320 to 327, 448 to 455 – 2x-speed Write Strategy code for Layer 0

These fields shall specify the 2x-speed Write Strategy code for Layer 0 in the Extended embossed data of PFI Field ID6 to ID7. The Write Strategy code shall be as specified in 26.1.6.1.4.

Bytes 72 to 79, 200 to 207, 328 to 335, 456 to 463

These bytes shall be set to (00).

Bytes 80 to 83, 208 to 211, 336 to 339, 464 to 467 – Recording power

This Ecma Standard does not specify the content of these fields. Unless otherwise agreed to by the interchange parties, this content shall be ignored in interchange.

Bytes 84 to 91, 212 to 219, 340 to 347, 468 to 475 – Time stamp

This Ecma Standard does not specify the content of these fields. Unless otherwise agreed to by the interchange parties, this content shall be ignored in interchange.

Bytes 92 to 95, 220 to 223, 348 to 351, 476 to 479 - Power calibration address

These fields shall specify the start ECC Block address of the DTA where the last power calibration was performed. If these fields are set to (00), they shall be ignored in interchange.

Bytes 96 to 107, 224 to 235, 352 to 363, 480 to 491 - Running OPC information

This Ecma Standard does not specify the content of these fields. Unless otherwise agreed to by the interchange parties, this content shall be ignored in interchange.

Bytes 108 to 117, 236 to 245, 364 to 373, 492 to 501 – 2x-speed Write Strategy code for Layer 1 with 2T multi-pulse

These fields shall specify the 2x-speed Write Strategy code for Layer 1 with 2T multi-pulse in the Extended embossed data of PFI Field ID10 to ID11. The Write Strategy code shall be as specified in 26.1.6.1.4.

Bytes 118 to 125, 246 to 253, 374 to 381, 502 to 509 – 2x-speed Write Strategy code for Layer 1

These fields shall specify the 2x-speed Write Strategy code for Layer 1 in the Extended embossed data of PFI Field ID12 to ID13. The Write Strategy code shall be as specified in 26.1.6.1.4.

Bytes 126 to 127, 254 to 255, 382 to 383, 510 to 511, 512 to 2047

These bytes shall be set to (00).

29.3.3.2.3 Format3 RMD Field2

Format4 RMD Field2 may specify user specific data. If this field is not used, it shall be set to (00).

Copyright International Organization for Standardization
Provided by IHS under license with ISO
No reproduction or networking permitted without license from IHS
Not for Resale

This Ecma Standard does not specify the content of these bytes unless otherwise agreed to by the interchange parties, this content shall be ignored in interchange.

29.3.3.2.4 Format3 RMD Field3

Format3 RMD Field3 shall contain the information related to the format operation, the RZone and the Layer jump recording. The data format of this field shall be as shown in Table 46.

Table 46 — Format3 RMD Field3

BP	Contents	Number of bytes
0	Format operation code	1
1	Set to (00)	1
2 to 5	Format Information1	4
6 to 9	Format Information2	4
10 to 255	Set to (00)	246
256 to 257	Last RZone Number	2
258 to 261	Start sector number of RZone	4
262 to 265	End sector number of RZone	4
266 to 511	Set to (00)	246
512 to 515	Layer jump address on Layer 0	4
516 to 519	Last recorded address	4
520 to 523	Previous Layer jump address on Layer 0	4
524 to 525	Jump interval	2
526 to 527	Set to (00)	2
528 to 531	Outermost address of the recorded area with Data Zone attribute on Layer 0	4
532 to 535	Outermost address of the recorded area with Data Zone attribute on Layer 1	4
536 to 2047	Set to (00)	1512

Byte 0 – Format operation code

This field shall specify the format operation code as shown in Table 47.

Byte 1

This byte shall be set to (00)

Bytes 2 to 5 – Format Information1

These bytes shall specify the information data related with format operation code. The content of Format Information1 shall be as shown in Table 47.

Bytes 6 to 9 – Format Information2

These bytes shall specify the information data related with format operation code. The content of Format Information2 shall be as shown in Table 47.

DRAFT 2009

Copyright International Organization for Standardization
Provided by IHS under license with ISO
No reproduction or networking permitted without license from IHS
Not for Resale

Table 47 — Format operation code and the contents of Format Information fields

Format operation code		Format Information1	Format Information2
Value	Definition		
(00)	No format operation is in progress.	reserved	reserved
(01)	Full format	Start PSN	Number of ECC blocks
(02)	Grow format	Start PSN	Number of ECC blocks
(03)	reserved	reserved	reserved
(04)	Quick grow format	Start PSN	Number of ECC blocks
(05)	Quick format	Start PSN	Number of ECC blocks
(06)	Close intermediate state	Start PSN	Marker PSN
(07)	Fast Re-format	Start PSN	End PSN of the format area
Other settings are prohibited by this Ecma standard.			

"Start PSN" for Full format operation shall be set to (024440) without NBCA or (02D5B0) with NBCA.

"Start PSN" for Quick format operation shall specify the first Physical Sector Number of RW-Physical format information Zone, and shall be set to (02E400).

"Start PSN" for the other format operations. See Annex M.

"Number of ECC blocks" for each format operation shall specify the number of ECC blocks to be formatted in the Data Recordable Zone by the specified format operation.

"Marker PSN" for Close intermediate state shall specify the Physical Sector Number of the last sector of the ECC block where the close operation on Layer 0 is finished. (outermost physical sector number of shifted Middle Zone or fixed Middle Zone on Layer 0)

"End PSN of the format area" for Fast Re-format operation shall specify the end Physical Sector Number of the specified area by this format operation. End Physical Sector Number shall be specified on ECC block boundary.

See Annex M for the details of each format operation.

At completion of the Quick grow and Quick format operation, Last recorded address field (Bytes 516 to 519) shall specify the last recorded address of the formatted disk.

Bytes 10 to 255

These bytes shall be set to (00).

Bytes 256 to 257 – Last RZone Number

These bytes shall specify the last RZone number.

Bytes 258 to 261 – Start sector number of RZone

These bytes shall specify the start sector number of the RZone.

Bytes 262 to 265 – End sector number of RZone

These bytes shall specify the end sector number of the RZone. In the case of Intermediate state, this field should be updated at appropriate period.

If this field set to (00), this field is invalid.

Bytes 266 to 511

These bytes shall be set to (00).

--`,,```,,,,````-`-`,,`,,`,`,,`---

Copyright International Organization for Standardization
Provided by IHS under license with ISO
No reproduction or networking permitted without license from IHS
Not for Resale

DRAFT

Bytes 512 to 515 – Layer jump address on Layer 0

When the Layer jump recording is applied, this field shall specify the Layer jump address.

The first byte of this field shall be set to (00).

The second to the fourth bytes of this field shall specify the Layer jump address on Layer 0.

A jump destination address (Y) is determined by a Layer jump address (X) described below.

$$Y = \overline{X}$$

The second to fourth bytes of this field shall be set to (00) for the following two cases.

1) When no Layer jump address is specified, or

2) When the Data Recordable Zone of both layers that are located between the innermost radius and this Physical sector number are in the logically fully recorded state.

When Jump interval (Bytes 524 to 525) is specified, this field is specified only by the calculation from the Jump interval.

Neither the End sector number of Layer 0 nor the Start sector number of the shifted Middle Zone –1 shall be set to this field as a Layer jump address. See Annex S.

Bytes 516 to 519 – Last recorded address

These bytes shall specify the Last recorded address excluding padding data area.

This field is not affected by the last recorded address of the area considered as logically unrecorded area by the format operation even if the area is in physically recorded state.

The first byte of this field shall specify the Layer information for the Last recorded address, and the byte shall be assigned according to the following rule;

(00) … The following 3 bytes specify the Last recorded address of Layer 0

(FF) … The following 3 bytes specify the Last recorded address of Layer 1

Other settings are prohibited by this Ecma Standard.

The second to the fourth bytes of this field shall specify the Last recorded address. If the second to fourth bytes of this field are set to (00), then this field is invalid. See Annex S.

Bytes 520 to 523 – Previous Layer jump address on Layer 0

When the Layer jump recording is applied, these bytes shall specify the Previous layer jump address.

The first byte of this field shall be set to (00). The second to the fourth bytes of this field shall specify the Previous layer jump address on Layer 0.

A jump destination address (Y) is determined by a Layer jump address (X) described below.

$$Y = \overline{X}$$

The initial value of the second to fourth bytes of this field shall be set to (00). A Layer jump address value specified by the Layer jump address on Layer 0 field (Bytes 512 to 515) shall be copied into this field immediately after the Data Recordable Zone of both layers that are located between the innermost radius and this Physical sector number are in the logically fully recorded state. See Annex S.

Bytes 524 to 525 – Jump interval

When the Layer jump recording with constant jump interval is applied, these bytes shall specify the Jump interval width described by the number of ECC blocks on Layer 1 except Buffer block.

Copyright International Organization for Standardization
Provided by IHS under license with ISO
No reproduction or networking permitted without license from IHS
Not for Resale

Setting conditions of this field are described in Annex S.

Bytes 526 to 527

These bytes shall be set to (00).

Bytes 528 to 531 – Outermost address of the recorded area with Data Zone attribute on Layer 0

These bytes shall specify the maximum Physical sector number of the recorded area in the Data recordable Zone on Layer 0.

All sectors in the Data Recordable Zone on Layer 0 that are located between the innermost radius and this Physical sector number are in the recorded state with the Data Zone attribute (Zone type = ZERO ZERO).

Bytes 532 to 535 – Outermost address of the recorded area with Data Zone attribute on Layer 1

These bytes shall specify the minimum Physical sector number of the recorded area in the Data recordable Zone on Layer 1.

All sectors in the Data Recordable Zone on Layer 1 that are located between the innermost radius and this Physical sector number are in the recorded state with the Data Zone attribute (Zone type = ZERO ZERO).

Bytes 536 to 2047

These bytes shall be set to (00).

29.3.3.2.5 Format3 RMD Field4

Format3 RMD Field4 shall specify the medium certification related information and the contents of this field shall be as specified in Table 48.

After formatting a disk, medium certification may be done if required. The result of medium certification may be specified in Defect Status Bitmap.

Table 48 – Format3 RMD Field4

BP	Contents	Number of bytes
0 to 3	PSN of previous Defect Status Bitmap RMD Set	4
4 to 7	Certification start PSN	4
8 to 11	Certification end PSN	4
12 to 2047	Defect Status Bitmap	2036

Bytes 0 to 3 – PSN of previous Defect Status Bitmap RMD Set

These bytes shall specify the start Physical sector number of RMD Set which includes previously generated Defect Status Bitmap. When these bytes are set to (00), this field is invalid.

Bytes 4 to 7 – Certification start PSN

These bytes shall specify the start Physical sector number of the ECC block where the following Defect Status Bitmap starts. When these bytes are set to (00), then the Certification end PSN field and the Defect Status Bitmap field are invalid.

Bytes 8 to 11 – Certification end PSN

These bytes shall specify the end Physical sector number of the ECC block where the following Defect Status Bitmap ends.

Bytes 12 to 2047 – Defect Status Bitmap

These bytes shall specify the Defect Status bit (DS) #n according to the following rule.

Copyright International Organization for Standardization
Provided by IHS under license with ISO
No reproduction or networking permitted without license from IHS
Not for Resale

DS … ZERO : To indicate that the ECC block is non-defective and it is possible to read and record data in this ECC block. If no EDC error occurs in the ECC block, this ECC block is non-defective.

… ONE : To indicate that the ECC block is defective and it might not be able to read and record data in this ECC block. If an EDC error occurs in the ECC block, this ECC block is defective.

The data format of this field shall be as shown in Table 49.

Table 49 — Data format of Defect Status Bitmap field

	b7	b6	b5	b4	b3	b2	b1	b0
BP 12	DS #8	DS #7	DS #6	DS #5	DS #4	DS #3	DS #2	DS #1
BP 13	DS #16	DS #15	DS #14	DS #13	DS #12	DS #11	DS #10	DS #9
:	:	:	:	:	:	:	:	:
BP 2047	DS #16288	DS #16287	DS #16286	DS #16285	DS #16284	DS #16283	DS #16282	DS #16281

29.3.3.2.6 Format3 RMD Field5 to RMD Field12

Format3 RMD Field5 to RMD Field12 may specify the Defect Status Bitmap. These bytes shall specify the Defect Status bit (DS) #n according to the rule specified in Format3 RMD Field 4. The data format of each field shall be as shown in Table 49. If the Certification start PSN field in Format3 RMD Field4 is set to (00), then these fields are invalid.

Table 49 — Data format of Defect Status Bitmap field

	b7	b6	b5	b4	b3	b2	b1	b0
BP 0	DS #(n+8)	DS #(n+7)	DS #(n+6)	DS #(n+5)	DS #(n+4)	DS #(n+3)	DS #(n+2)	DS #(n+1)
BP 1	DS #(n+16)	DS #(n+15)	DS #(n+14)	DS #(n+13)	DS #(n+12)	DS #(n+11)	DS #(n+10)	DS #(n+9)
:	:	:	:	:	:	:	:	:
BP 2047	DS # (n+16384)	DS # (n+16383)	DS # (n+16382)	DS # (n+16381)	DS # (n+16380)	DS # (n+16379)	DS # (n+16378)	DS # (n+16377)

Each n of Formt3 RMD Field5 to Field12 is defined as follows.

Field5 : n = 16288

Field6 : n = 32672

Field7 : n = 49056

Field8 : n = 65440

Field9 : n = 81824

Field10 : n = 98208

Field11 : n = 114592

Field12 : n = 130976

29.3.3.2.7 Format3 RMD Field13

Format3 RMD Field13 is available for specifying drive specific information.

In Format3 RMD Field13, it is possible to record drive specific information for up to 8 recorders as shown in Table 50. Each recorder may be single recorder or coexisting recorder in system.

Copyright International Organization for Standardization
Provided by IHS under license with ISO
No reproduction or networking permitted without license from IHS
Not for Resale

This Ecma Standard does not specify the content of Format3 RMD Field13 except Recorded RMA address fields. Unless otherwise agreed to by the interchange parties, the contents of the other fields shall be ignored in interchange.

The unused field in Format3 RMD Field13 shall be set to (00).

Table 50 — Format3 RMD Field13

BP	Contents		Number of bytes
0 to 31	No. A	Drive manufacturer ID	32
32 to 47		Serial Number	16
48 to 63		Model Number	16
64 to 66		Recorded RMA address (ECC Block address)	3
67 to 127		Drive specific data	61
128 to 159	No. B	Drive manufacturer ID	32
160 to 175		Serial Number	16
176 to 191		Model Number	16
192 to 194		Recorded RMA address (ECC Block address)	3
195 to 255		Drive specific data	61
256 to 287	No. C	Drive manufacturer ID	32
288 to 303		Serial Number	16
304 to 319		Model Number	16
320 to 322		Recorded RMA address (ECC Block address)	3
323 to 383		Drive specific data	61
384 to 415	No. D	Drive manufacturer ID	32
416 to 431		Serial Number	16
432 to 447		Model Number	16
448 to 450		Recorded RMA address (ECC Block address)	3
451 to 511		Drive specific data	61
512 to 543	No. E	Drive manufacturer ID	32
544 to 559		Serial Number	16
560 to 575		Model Number	16
576 to 578		Recorded RMA address (ECC Block address)	3
579 to 639		Drive specific data	61
640 to 671	No. F	Drive manufacturer ID	32
672 to 687		Serial Number	16
688 to 703		Model Number	16
704 to 706		Recorded RMA address (ECC Block address)	3
707 to 767		Drive specific data	61
768 to 799	No. G	Drive manufacturer ID	32
800 to 815		Serial Number	16
816 to 831		Model Number	16
832 to 834		Recorded RMA address (ECC Block address)	3
835 to 895		Drive specific data	61
896 to 927	No. H	Drive manufacturer ID	32
928 to 943		Serial Number	16
944 to 959		Model Number	16

Copyright International Organization for Standardization
Provided by IHS under license with ISO
No reproduction or networking permitted without license from IHS
Not for Resale

Table 50 — Format3 RMD Field13 (concluded)

BP	Contents		Number of bytes
960 to 962		Recorded RMA address (ECC Block address)	3
963 to 1023		Drive specific data	61
1024 to 2047	No. A	Additional drive specific information for recorder No. A	1024

Bytes 64 to 66, 192 to 194, 320 to 322, 448 to 450, 576 to 578, 704 to 706, 832 to 834, 960 to 962 - Recorded RMA address

These bytes shall specify the stating RMA address which is used to record RMD including the information of specific recorder for the time. The RMA address of regarding RMD shall be specified in ECC Block address.

29.3.3.2.8 Format3 RMD Field14

Format3 RMD Field14 shall specify versatile information of a disk and drive. The contents of this field shall be shown as in Table 51.

Table 51 — Format3 RMD Field14

BP	Contents	Number of bytes
0 to 8	Set to (00)	9
9 to 12	Testing address of Inner Disk Testing Area on Layer 0	4
13 to 16	Testing address of Inner Disk Testing Area on Layer 1	4
17 to 20	Testing address of Outer Disk Testing Area on Layer 0	4
21 to 24	Testing address of Outer Disk Testing Area on Layer 1	4
25 to 28	Testing address of optional Inner Disk Testing Area on Layer 1	4
29 to 2047	Set to (00)	2019

Bytes 9 to 12 - Testing address of Inner Disk Testing Area on Layer 0

This field shall specify the start ECC Block address of Inner Disk Testing Area on Layer 0 where the latest calibration was performed.

Bytes 13 to 16 - Testing address of Inner Disk Testing Area on Layer 1

This field shall specify the start ECC Block address of Inner Disk Testing Area on Layer 1 where the latest calibration was performed.

Bytes 17 to 20 - Testing address of Outer Disk Testing Area on Layer 0

This field shall specify the start ECC Block address of Outer Disk Testing Area on Layer 0 where the latest calibration was performed.

Bytes 21 to 24 - Testing address of Outer Disk Testing Area on Layer 1

This field shall specify the start ECC Block address of Outer Disk Testing Area on Layer 1 where the latest calibration was performed.

Bytes 25 to 28 - Testing address of optional Inner Disk Testing Area on Layer 1

This field shall specify the start ECC Block address of optional Inner Disk Testing Area on Layer 1 where the latest calibration was performed.

Bytes 29 to 2027

These bytes shall be set to (00).

--`,,```,,,,````-`-`,,`,,`,`,,`---
Copyright International Organization for Standardization
Provided by IHS under license with ISO
No reproduction or networking permitted without license from IHS
Not for Resale

Annex A
(normative)

Measurement of the angular deviation α

The angular deviation is the angle α formed by an incident beam perpendicular to the Reference Plane P with the reflected beam. See Figure A.1.

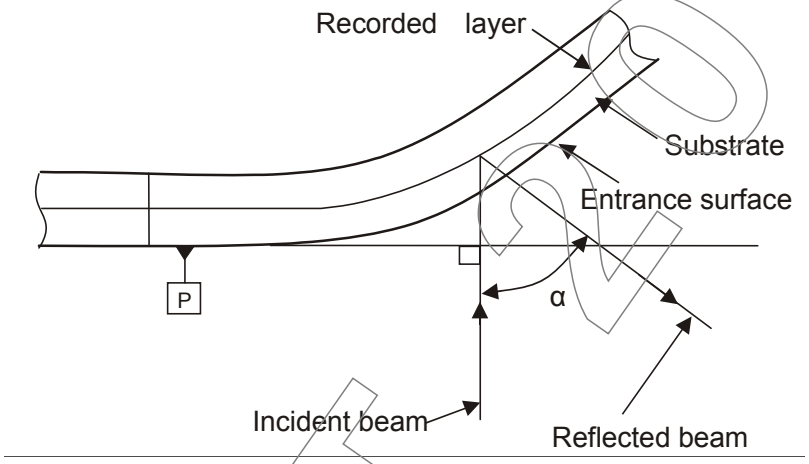

Figure A.1 — Angular deviation α

For measuring the angular deviation α, the disk shall be clamped between two concentric rings covering most of the Clamping Zone. The top clamping area shall have the same diameters as the bottom clamping area.

$$d_{in} = 22{,}3 \text{ mm} \begin{matrix} + 0{,}5 \text{ mm} \\ - 0{,}0 \text{ mm} \end{matrix}$$

$$d_{out} = 32{,}7 \text{ mm} \begin{matrix} + 0{,}0 \text{ mm} \\ - 0{,}5 \text{ mm} \end{matrix}$$

The total clamping force shall be F_1 = 2,0 N ± 0,5 N. In order to prevent warping of the disk under the moment of force generated by the clamping force and the chucking force F_2 exerted on the rim of the centre hole of the disk, F_2 shall not exceed 0,5 N. See Figure A.2. This measurement shall be made under the conditions of 8.1.1.a).

DRAFT ECMA-359

Copyright International Organization for Standardization
Provided by IHS under license with ISO
No reproduction or networking permitted without license from IHS
Not for Resale

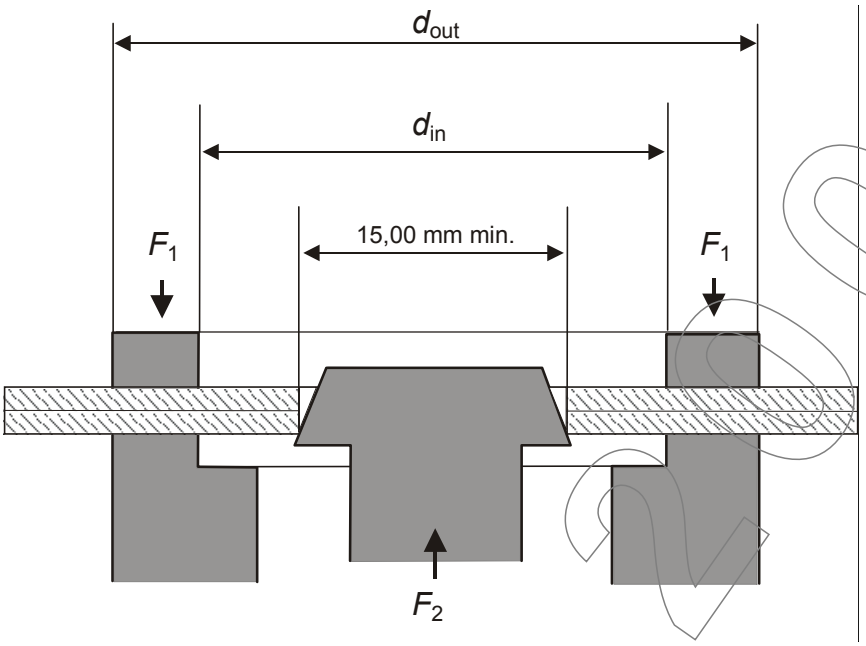

Figure A.2 — Clamping and chucking conditions

DRAFT 09

Copyright International Organization for Standardization
Provided by IHS under license with ISO
No reproduction or networking permitted without license from IHS
Not for Resale

Annex B
(normative)

Measurement of birefringence

B.1 Principle of the measurement

In order to measure the birefringence, circularly polarized light in a parallel beam is used. The phase retardation is measured by observing the ellipticity of the reflected light.

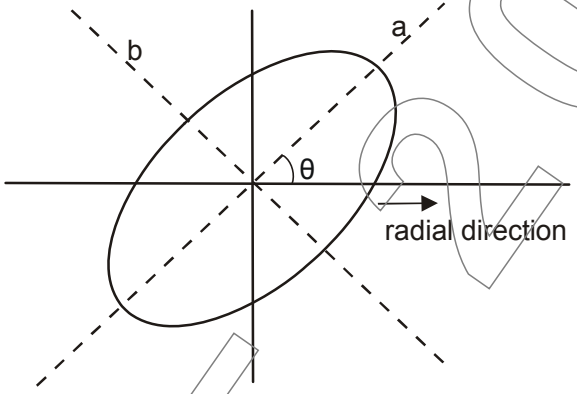

Figure B.1 — Ellipse with ellipticity e = b/a and orientation θ

The orientation θ of the ellipse is determined by the orientation of the optical axis

$$\theta = \gamma - \pi/4 \qquad \text{(I)}$$

where γ is the angle between the optical axis and the radial direction.

The ellipticity $e = b/a$ is a function of the phase retardation δ

$$e = \tan\left[\frac{1}{2}\left(\frac{\pi}{2} - \delta\right)\right] \qquad \text{(II)}$$

When the phase retardation δ is known the birefringence *BR* can be expressed as a fraction of the wavelength

$$BR = \frac{\lambda}{2\pi}\delta \quad \text{nm} \qquad \text{(III)}$$

Thus, by observing the elliptically polarized light reflected from the disk, the birefringence can be measured and the orientation of the optical axis can be assessed as well.

B.2 Measurements conditions

The measurement of the birefringence specified above shall be made under the following conditions.

Mode of measurement in reflection, double pass through the substrate

Wavelength λ of the laser light	640 nm ± 15 nm
Beam diameter (FWHM)	1,0 mm ± 0,2 mm

Copyright International Organization for Standardization
Provided by IHS under license with ISO
No reproduction or networking permitted without license from IHS
Not for Resale

Angle β of incidence in radial direction relative to the radial plane perpendicular to Reference Plane P	7,0° ± 0,2°
Clamping and chucking conditions	as specified by Annex A
Disk mounting	horizontally
Rotation	less than 1 Hz
Temperature and relative humidity	as specified in 8.1.1b)

B.3 Example of a measuring set-up

Whilst this Ecma Standard does not prescribe a specific device for measuring birefringence, the device shown schematically in Figure B.2 as an example, is well suited for this measurement.

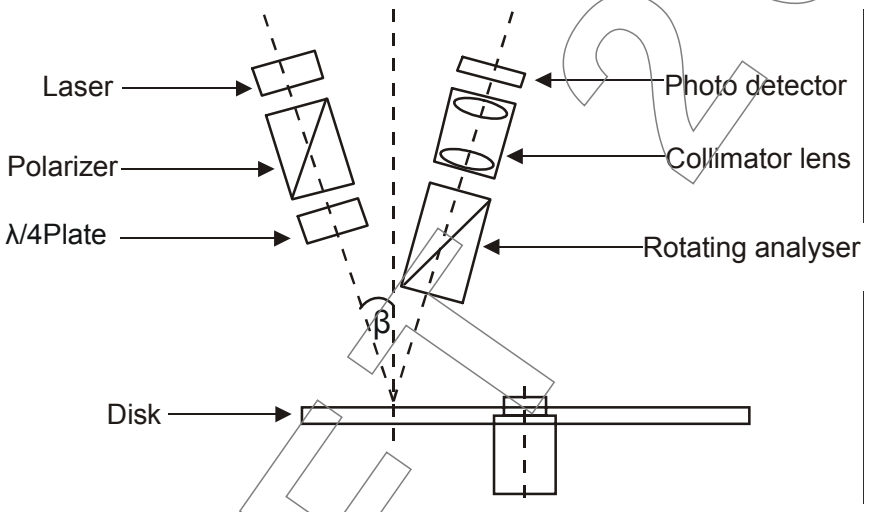

Figure B.2 — Example of a device for the measurement of birefringence

Light from a laser source, collimated into a polarizer (extinction ratio ≈ 10^{-5}), is made circular by a λ/4 plate. The ellipticity of the reflected light is analyzed by a rotating analyzer and a photo detector. For every location on the disk, the minimum and the maximum values of the intensity are measured. The ellipticity can then be calculated as

$$e^2 = I_{min} / I_{max} \qquad \text{(IV)}$$

Combining equations II, III and IV yields

$$BR = \frac{\lambda}{4} - \frac{\lambda}{\pi} \arctan \sqrt{\frac{I_{min}}{I_{max}}}$$

This device can be easily calibrated as follows

- I_{min} is set to 0 by measuring a polarizer or a λ/4 plate,
- $I_{min} = I_{max}$ when measuring a mirror

Apart of the d.c. contribution of the front surface reflection, a.c. components may occur, due to the interference of the reflection(s) of the front surface with the reflection(s) from the recorded layer. These a.c. reflectance effects are significant only if the disk substrate has an extremely accurate flatness and if the light source has a high coherence.

Copyright International Organization for Standardization
Provided by IHS under license with ISO
No reproduction or networking permitted without license from IHS
Not for Resale

Annex C
(normative)

Measurement of the differential phase tracking error

C.1 Measuring method for the differential phase tracking error

The reference circuit for the measurement of the tracking error shall be that shown in Figure C.1. Each output of the diagonal pairs of elements of the quadrant photo detector shall be digitized independently after equalization of the waveform defined by

$$H(s) = (1 + 1{,}6 \times 10^{-7}\, i\omega) / (1 + 4{,}7 \times 10^{-8}\, i\omega)$$

The gain of the comparators shall be sufficient to reach full saturation on the outputs, even with minimum signal amplitudes. Phases of the digitized pulse signal edges (signals B_1 and B_2) shall be compared to each other to produce a time-lead signal C_1 and a time-lag signal C_2. The phase comparator shall react to each individual edge with signal C_1 or C_2, depending on the sign of Δt_i. A tracking error signal shall be produced by smoothing the C_1, C_2 signals with low-pass filters and by subtracting by means of a unity gain differential amplifier. The low-pass filters shall be 1st order filters with a cut-off frequency of (-3 dB) 30 kHz.

Special attention shall be given to the implementation of the circuit because very small time differences have to be measured, indeed 1 % of T equals only 0,38 ns. Careful averaging is needed.

The average time difference between two signals from the diagonal pairs of elements of the quadrant detector shall be

$$\overline{\Delta t} = 1/N \sum \Delta t_i$$

where N is the number of edges both rising and falling.

C.2 Measurement of $\overline{\Delta t}$ /T without time interval analyzer

The relative time difference $\overline{\Delta t}$ /T is represented by the amplitude of the tracking error signal provided that the amplitudes of the C_1 and C_2 signals and the frequency component of the read-out signals are normalized. The relation between the tracking error amplitude $\overline{\Delta TVE}$ and the time difference is given by

$$\overline{\Delta TVE} = \frac{\sum \Delta t_i}{\sum T_i} \mathrm{Vpc} = \frac{\sum \Delta t_i}{N n \mathrm{T}} \mathrm{Vpc} = \frac{\overline{\Delta t}}{\mathrm{T}} \times \frac{\mathrm{Vpc}}{\mathrm{n}}$$

where

Vpc is the amplitude of the C_1 and C_2 signals

T_i is the actual length of the read-out signal in the range 3T to 14T

nT is the weighted average value of the actual lengths

$N\,n$ T is the total averaging time

Assuming that Vpc equals ≈ 5 V and that the measured value of n equals ≈ 5, then the above relation between the tracking error amplitude $\overline{\Delta TVE}$ and the time difference $\overline{\Delta t}$ can be simplified to

$$\overline{\Delta TVE} = \overline{\Delta t} \ / \ \mathrm{T}$$

The specification for the tracking gain can now be rewritten by using the tracking error amplitude as follows

--`,,```,,,,````-`-`,,`,,`,`,,`---

Copyright International Organization for Standardization
Provided by IHS under license with ISO
No reproduction or networking permitted without license from IHS
Not for Resale

0,5 (Vpc/n) ≤ $\overline{\Delta TVE}$ ≤ 1,1 (Vpc/n)

at 0,1 μm radial offset.

C.3 Calibration of $\overline{\Delta t}$ /T

As the gain of the phase comparator tends to vary, special attention shall be given to the calibration of the gain of the phase comparator. The following check and calibration method shall be applied for the measurement of the DPD tracking error signal.

a) Checking the measurement circuit

a.1) Measure the relation between the amplitude of the first comparator input (3T) and the amplitude of the tracking error signal.

a.2) Check the current gain of the amplifier, using the saturation area (see Figure C.2).

b) Determination of the calibration factor K

b.1) Generate two sinusoidal signals A1 and A2 of frequency 2,616 MHz (corresponding to 5T) with phase difference, and feed them into two equalizer circuits.

b.2) Measure the relation between $\overline{\Delta t}$/T and $\overline{\Delta TVE}$ / Vpc.

($\overline{\Delta TVE}$ / Vpc) K = ($\overline{\Delta t}$ / T) / *n*

K = (0,2 $\overline{\Delta t}$ /T) / ($\overline{\Delta TVE}$ / Vpc)

for *n* = 5

The relation between $\overline{\Delta t}$ /T and $\overline{\Delta TVE}$ / Vpc is linear (see Figure C.3).

c) Compare the measured $\overline{\Delta t}$ /T with the calculated one

c.1) Measure $\overline{\Delta t}$ /T using the method of C.1.

c.2) Calculate $\overline{\Delta t}$ /T(real) as follows

$\overline{\Delta t}$ /T (real) = K × $\overline{\Delta t}$ /T (measured)

DRAFT 2009

Copyright International Organization for Standardization
Provided by IHS under license with ISO
No reproduction or networking permitted without license from IHS
Not for Resale

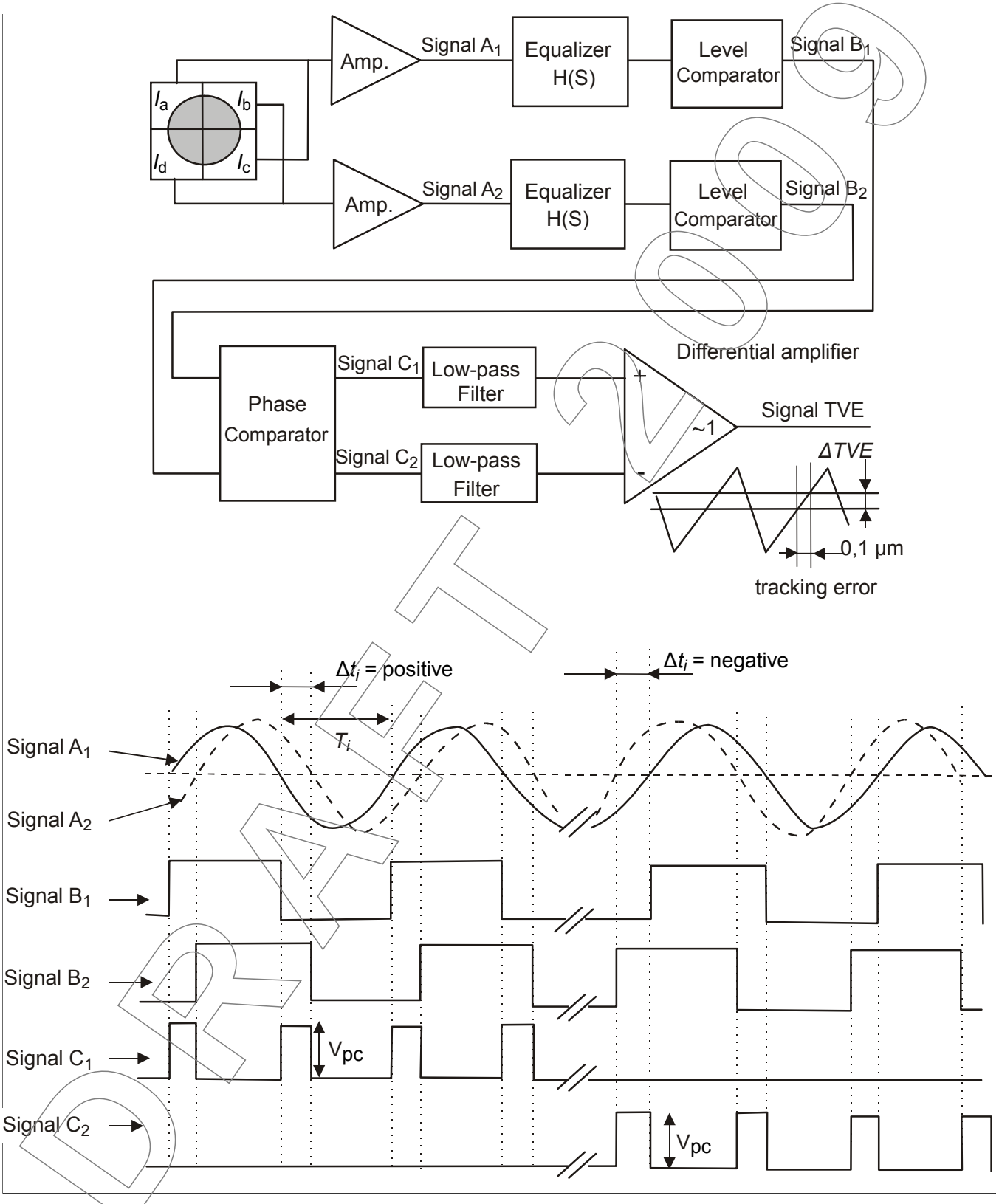

Figure C.1 — Circuit for tracking error measurements

Copyright International Organization for Standardization
Provided by IHS under license with ISO
No reproduction or networking permitted without license from IHS
Not for Resale

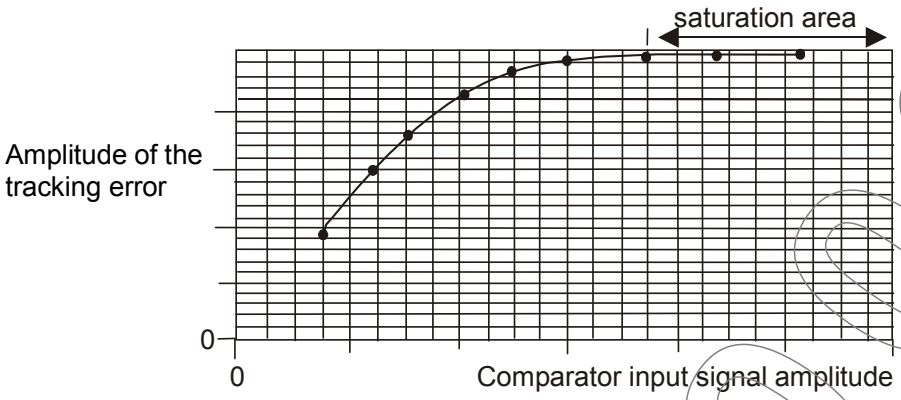

Figure C.2 — Comparator input signal amplitude vs. tracking error signal amplitude

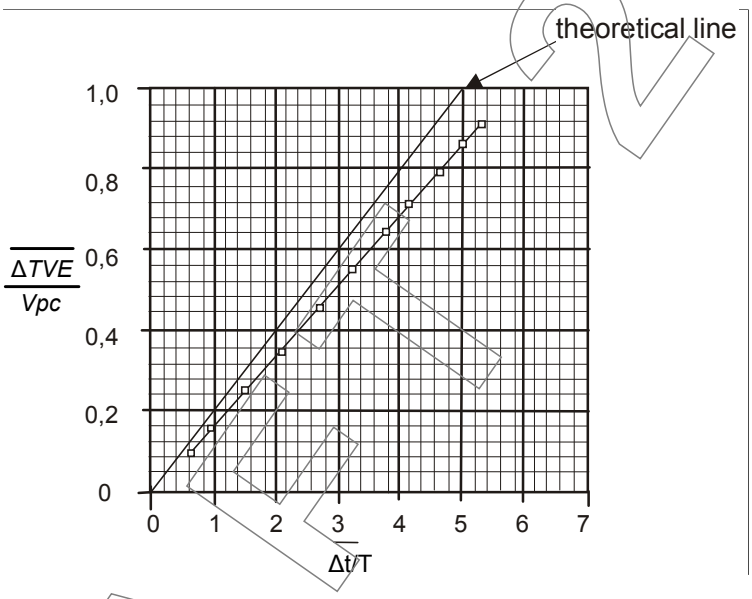

Figure C.3 — $\overline{\Delta t}/T$ vs. $\overline{\Delta TVE}$ / Vpc

DRAFT 2009

Copyright International Organization for Standardization
Provided by IHS under license with ISO
No reproduction or networking permitted without license from IHS
Not for Resale

Annex D
(normative)

Measurement of light reflectance

D.1 Calibration method

A good reference disk shall be chosen, for instance 0,6 mm glass disk with a golden reflective mirror. This reference disk shall be measured by a parallel beam as shown in Figure D.1

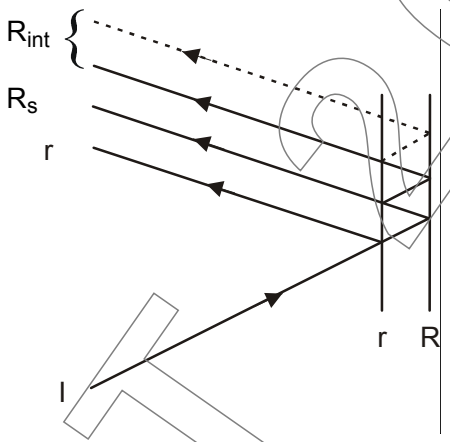

Figure D.1 — Reflectance calibration

In this Figure the following applies.

I = incident beam

r = reflectance of the entrance surface

R_s = main reflectance of the recorded layer

R_{int} = other reflectances of the entrance surface and of the recorded layer

$R_{//}$ = measured value, using the arrangement of Figure D.1

$R_{//} = r + R_s + R_{int}$

$r = ((n-1) / (n+1))^2$ where n is the refraction index of the substrate

$R_s = R_{//} - r - R_{int}$

$R_s = [(1-r)^2 \times (R_{//} - r)] / [1-r \times (2 - R_{//})]$

The reference disk shall be measured on a reference drive and I_{mirror} measured by the focused beam is equated to R_s as determined above.

Now the arrangement is calibrated and the focused reflectivity is a linear function of the reflectivity of the recorded layer, independently from the reflectivity of the entrance surface.

DRAFT 2009

Copyright International Organization for Standardization
Provided by IHS under license with ISO
No reproduction or networking permitted without license from IHS
Not for Resale

D.2 Measuring method

The measuring method comprises the following steps.

a) Measure the reflective light power D_s from the reference disk with calibrated reflectivity R_s

b) Measure I_{14H} in the Information Zone of the disk (see 13.3)

c) Calculate the reflectivity as follows

$$R_{14H} = R_s \times \frac{I_{14H}}{D_s}$$

DRAFT 2009

Copyright International Organization for Standardization
Provided by IHS under license with ISO
No reproduction or networking permitted without license from IHS
Not for Resale

Annex E
(normative)

Tapered cone for disk clamping

The device used for centring the disk for measurement shall be a cone with a taper angle β = 40,0°± 0,5° (see Figure E.1).

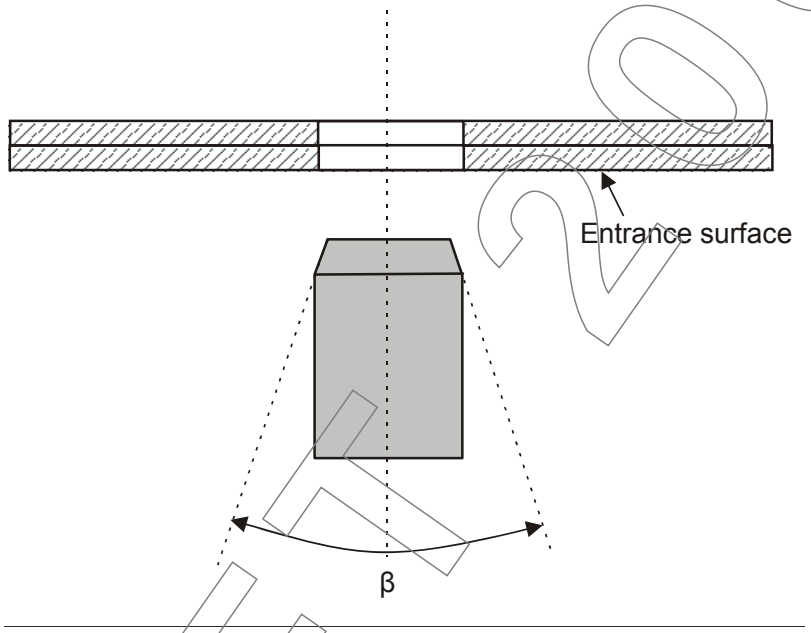

Figure E.1 — Tapered cone

DRAFT 2009

Copyright International Organization for Standardization
Provided by IHS under license with ISO
No reproduction or networking permitted without license from IHS
Not for Resale

DRAFT 2009

--`,,```,,,,````-`-`,,`,,`,`,,`---

Copyright International Organization for Standardization
Provided by IHS under license with ISO
No reproduction or networking permitted without license from IHS

Not for Resale

Annex F
(normative)

Measurement of jitter

Jitter shall be measured under the conditions of 9.1 with the additional conditions specified in this Annex.

F.1 System diagram for jitter measurement

The general system diagram for jitter measurement shall be as shown in Figure F.1.

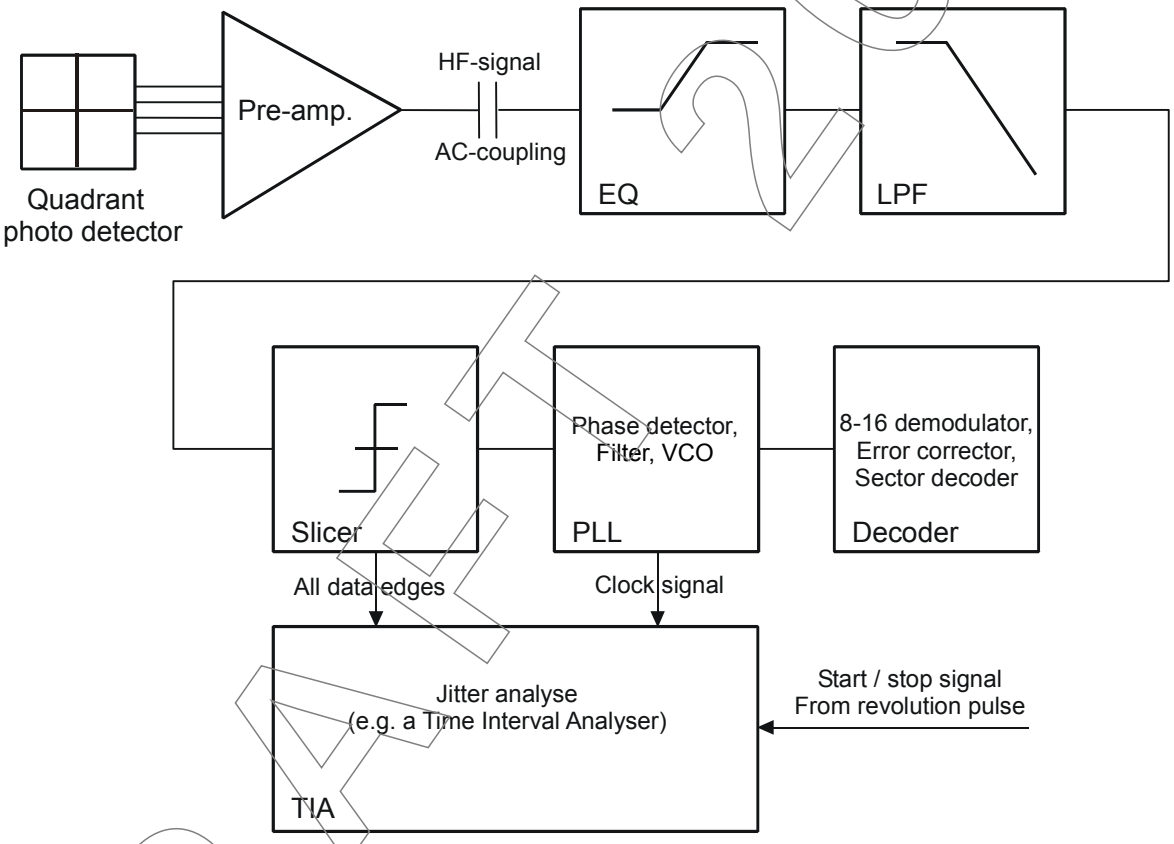

Figure F.1 — General diagram for jitter measurement

DRAFT 2009

Copyright International Organization for Standardization
Provided by IHS under license with ISO
No reproduction or networking permitted without license from IHS
Not for Resale

F.2 Open loop transfer function for PLL

The open-loop transfer function for the PLL shown in Figure F.1 shall be as shown in Figure F.2

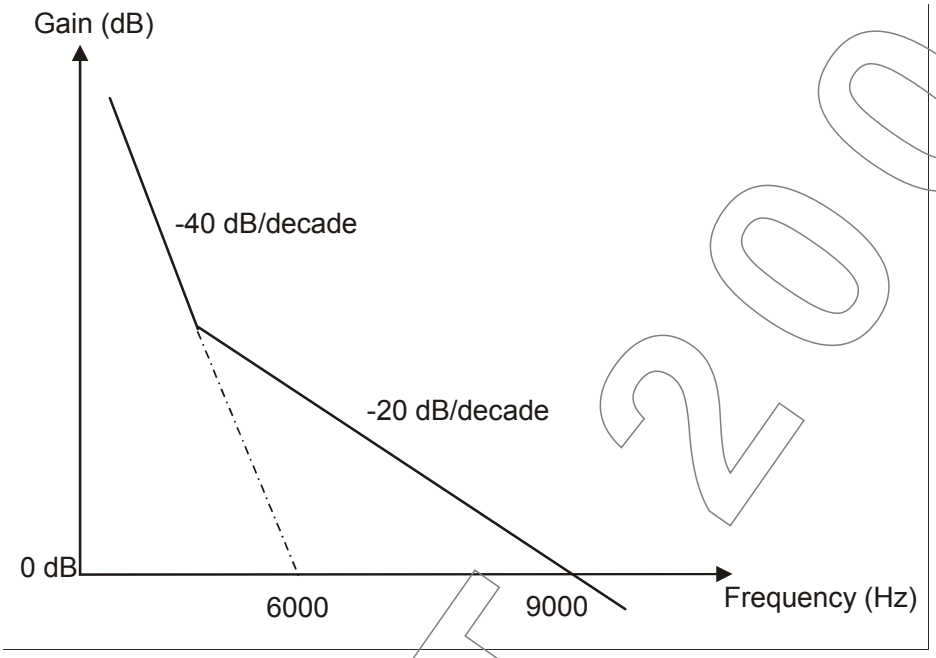

Figure F.2 — Schematic representation of the open-loop transfer function for PLL

F.3 Slicer

The slicer shall be a feed-back auto-slicer with a -3 dB closed-loop bandwidth of 5 kHz, 1st order integrating

F.4 Conditions for measurement

The bandwidth of the pre-amplifier of the photo detector shall be greater than 20 MHz in order to prevent group-delay distortion (see Figure F.3).

Low-pass filter: 6th order Bessel filter, f_c (-3 dB) = 8,2 MHz

Example of an analogue equalizer: 3-tap transversal filter with transfer function

$H(z) = 1{,}35\ z^{-2{,}093} - 0{,}175\ (1 + z^{-4{,}186})$

Filtering and equalization:

- Gain variation: 1 dB max. (below 7 MHz)

- Group delay variation: 3 ns max. (below 6,5 MHz)

- (Gain at 5,0 MHz - Gain at 0 Hz) = 3,2 dB $\pm$ 0,3 dB

a.c. coupling (high-pass filter) = 1st order, f_c (-3 dB) = 1 kHz

Correction of the angular deviation: only d.c. deviation.

DRAFT 2009

Copyright International Organization for Standardization
Provided by IHS under license with ISO
No reproduction or networking permitted without license from IHS
Not for Resale

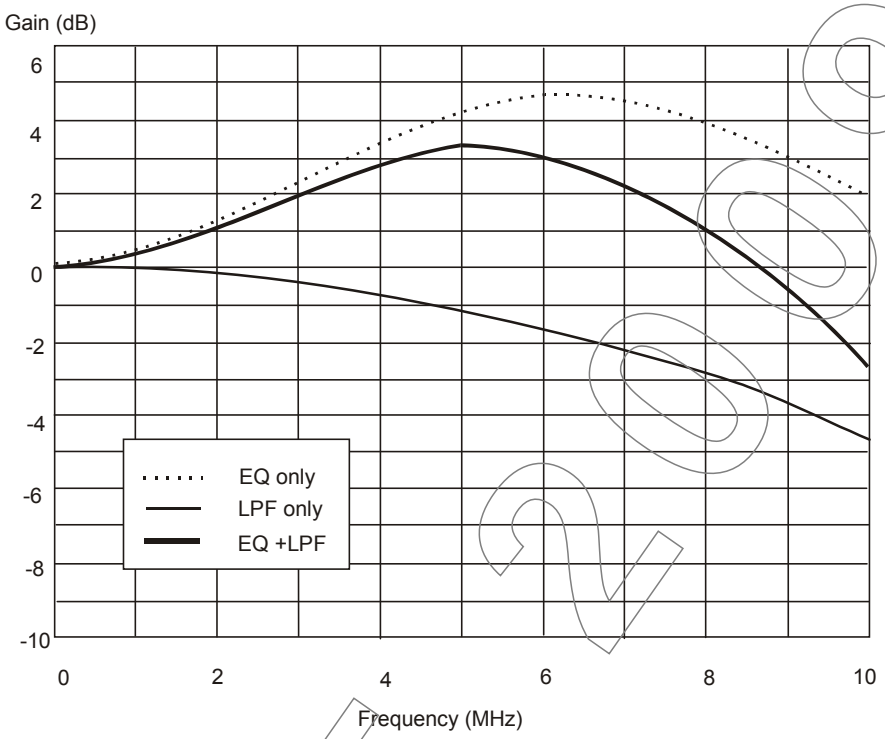

Figure F.3 — Frequency characteristics for the equalizer and the low-pass filter

F.5 Measurement

The jitter of all leading and trailing edges over one rotation shall be measured.

Under this measurement, the jitter shall be less than 9 % of the Channel bit clock period.

DRAFT

Copyright International Organization for Standardization
Provided by IHS under license with ISO
No reproduction or networking permitted without license from IHS
Not for Resale

DRAFT 2009

Copyright International Organization for Standardization
Provided by IHS under license with ISO
No reproduction or networking permitted without license from IHS
Not for Resale

Annex G
(normative)

8-to-16 Modulation with RLL (2,10) requirements

Tables G.1 and G.2 list the 16-bit Code Words into which the 8-bit coded Data bytes have to be transformed. Figure G.1 shows schematically how the Code Words and the associated State specification are generated.

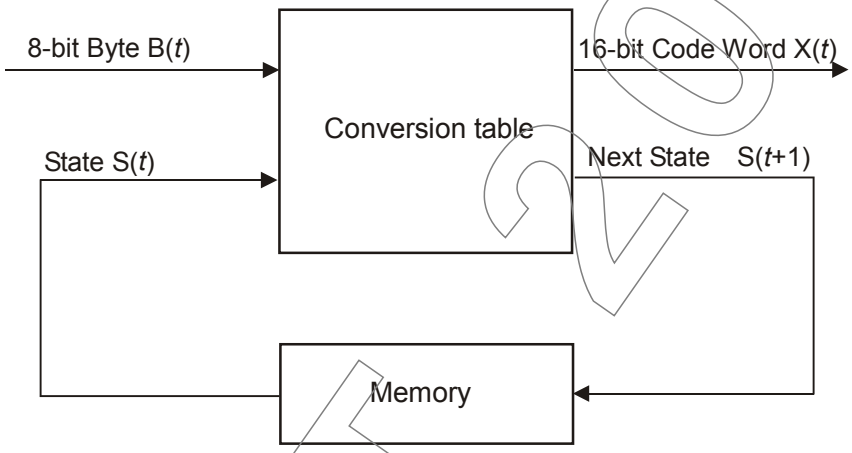

Figure G.1 — Code Words generation

In this Figure:

$X(t) = H\{B(t), S(t)\}$ $\quad X_{15}(t)$ = msb and $X_0(t)$ = lsb
$S(t+1) = G\{B(t), S(t)\}$
H is the output function
G is the next-state function

The Code Words leaving the States shall be chosen so that the concatenation of Code Words entering a State and those leaving that State satisfy the requirement that between two ONEs there shall be at least 2 and at most 10 ZEROs.

As additional requirements:

- Code Words leaving State 2 shall have both bit x_{15} and bit x_3 set to ZERO, and
- in Code Words leaving State 3 bit x_{15} or bit x_3 or both shall be set to ONE.

This means that the Code Word sets of States 2 and 3 are disjoint.

DRAFT 2009

Copyright International Organization for Standardization
Provided by IHS under license with ISO
No reproduction or networking permitted without license from IHS
Not for Resale

Code Word X(*t*)	Next State S(*t*+1)	Code Word X(*t*+1)
Ends with 1 or no trailing ZERO	State 1	Starts with 2 or up to 9 leading ZEROs
Ends with 2 or up to 5 trailing ZEROs	State 2	Starts with 1 or up to 5 leading ZEROs, and X_{15} (*t*+1),X_3 (*t*+1) = 0,0
Ends with 2 or up to 5 trailing ZEROs	State 3	Starts with none or up to 5 leading ZEROs, and X_{15} (*t*+1),X_3 (*t*+1) ≠ 0,0
Ends with 6 or up to 9 trailing ZEROs	State 4	Starts with 1 or no leading ZERO

Figure G.2 — Determination of States

Note that when decoding the recorded data, knowledge about the encoder is required to be able to reconstitute the original main Data.

$$B(t) = H^{-1} \{X(t), S(t)\}$$

Because of the involved error propagation, such state-dependent decoding is to be avoided. In the case of this 8-to-16 modulation, the conversion Tables have been chosen in such a way that knowledge about the State is not required in most cases. As can be gathered from the Tables, in some cases, two 8-bit bytes, for instance the 8-bit bytes 5 and 6 in States 1 and 2 in Table G.1, generate the same 16-bit Code Words. The construction of the Tables allows to solve this apparent ambiguity. Indeed, if two identical Code Words leave a State, one of them goes to State 2 and the other to State 3. Because the setting of bits X_{15} and X_3 is always different in these two States, any Code Word can be uniquely decoded by analysing the Code Word itself together with bits X_{15} and X_3 of the next Code Word:

$$B(t) = H^{-1} \{ X(t), X_{15} (t+1), X_3 (t+1) \}$$

In the Tables, the 8-bit bytes are identified by their decimal value.

DRAFT 2009

Copyright International Organization for Standardization
Provided by IHS under license with ISO
No reproduction or networking permitted without license from IHS
Not for Resale

Table G.1 — Main Conversion Table

8-bit	State 1		State 2		State 3		State 4	
byte	Code Word	Next	Code Word	Next	Code Word	Next	Code Word	Next
	msb lsb	State	msb lsb	State	msb lsb	State	msb lsb	State
0	0010000000001001	1	0100000100100000	2	0010000000001001	1	0100000100100000	2
1	0010000000010010	1	0010000000010010	1	1000000100100000	3	1000000100100000	3
2	0010000100100000	2	0010000100100000	2	1000000000010010	1	1000000000010010	1
3	0010000001001000	2	0100010010000000	4	0010000001001000	2	0100010010000000	4
4	0010000010010000	2	0010000010010000	2	1000000100100000	2	1000000100100000	2
5	0010000000100100	2	0010000000100100	2	1001001000000000	4	1001001000000000	4
6	0010000000100100	3	0010000000100100	3	1000100100000000	4	1000100100000000	4
7	0010000001001000	3	0100000000010010	1	0010000001001000	3	0100000000010010	1
8	0010000010010000	3	0010000010010000	3	1000010010000000	4	1000010010000000	4
9	0010000100100000	3	0010000100100000	3	1001001000000001	1	1001001000000001	1
10	0010010010000000	4	0010010010000000	4	1000100100000001	1	1000100100000001	1
11	0010001001000000	4	0010001001000000	4	1000000010010000	3	1000000010010000	3
12	0010010010000001	1	0010010010000001	1	1000000010010000	2	1000000010010000	2
13	0010001001000001	1	0010001001000001	1	1000010010000001	1	1000010010000001	1
14	0010000001001001	1	0100000000100100	3	0010000001001001	1	0100000000100100	3
15	0010000100100001	1	0010000100100001	1	1000001001000001	1	1000001001000001	1
16	0010000010010001	1	0010000010010001	1	1000000100100001	1	1000000100100001	1
17	0010000000100010	1	0010000000100010	1	1000001001000000	4	1000001001000000	4
18	0001000000001001	1	0100000010010000	2	0001000000001001	1	0100000010010000	2
19	0010000000010001	1	0010000000010001	1	1001000100000000	4	1001000100000000	4
20	0001000000010010	1	0001000000010010	1	1000100010000000	4	1000100010000000	4
21	0000100000000010	1	0000100000000010	1	1000000010010001	1	1000000010010001	1
22	0000010000000001	1	0000010000000001	1	1000000001001001	1	1000000001001001	1
23	0010001000100000	2	0010001000100000	2	1000000001001000	2	1000000001001000	2
24	0010000100010000	2	0010000100010000	2	1000000001001000	3	1000000001001000	3
25	0010000010001000	2	0100000000100100	2	0010000010001000	2	0100000000100100	2
26	0010000001000100	2	0010000001000100	2	1000000000100010	1	1000000000100010	1
27	0001000100100000	2	0001000100100000	2	1000000000010001	1	1000000000010001	1
28	0010000000001000	2	0100000010010000	3	0010000000001000	2	0100000010010000	3
29	0001000010010000	2	0001000010010000	2	1001001000000010	1	1001001000000010	1
30	0001000001001000	2	0100000100100000	3	0001000001001000	2	0100000100100000	3
31	0001000000100100	2	0001000000100100	2	1001000100000001	1	1001000100000001	1
32	0001000000000100	2	0001000000000100	2	1000100100000010	1	1000100100000010	1
33	0001000000000100	3	0001000000000100	3	1000100010000001	1	1000100010000001	1
34	0001000000100100	3	0001000000100100	3	1000000000100100	2	1000000000100100	2
35	0001000001001000	3	0100001001000000	4	0001000001001000	3	0100001001000000	4
36	0001000010010000	3	0001000010010000	3	1000000000100100	3	1000000000100100	3
37	0001000100100000	3	0001000100100000	3	1000010001000000	4	1000010001000000	4
38	0010000000001000	3	0100100100000001	1	0010000000001000	3	0100100100000001	1
39	0010000001000100	3	0010000001000100	3	1001000010000000	4	1001000010000000	4
40	0010000010001000	3	0100010010000001	1	0010000010001000	3	0100010010000001	1
41	0010000100010000	3	0010000100010000	3	1000010010000010	1	1000010010000010	1
42	0010001000100000	3	0010001000100000	3	1000001000100000	2	1000001000100000	2
43	0010010001000000	4	0010010001000000	4	1000010001000001	1	1000010001000001	1
44	0001001001000000	4	0001001001000000	4	1000001000100000	3	1000001000100000	3
45	0000001000000001	1	0100010001000000	4	1000001001000010	1	0100010001000000	4

Copyright International Organization for Standardization
Provided by IHS under license with ISO
No reproduction or networking permitted without license from IHS
Not for Resale

Table G.1 — Main Conversion Table (continued)

8-bit byte	State 1		State 2		State 3		State 4	
	Code Word msb lsb	Next State	Code Word msb lsb	Next State	Code Word msb lsb	Next State	Code Word msb lsb	Next State
46	0010010010000010	1	0010010010000010	1	1000001000100001	1	1000001000100001	1
47	0010000010001001	1	0100001001000001	1	0010000010001001	1	0100001001000001	1
48	0010010001000001	1	0010010001000001	1	1000000100010000	2	1000000100010000	2
49	0010001001000010	1	0010001001000010	1	1000000010001000	2	1000000010001000	2
50	0010001000100001	1	0010001000100001	1	1000000100010000	3	1000000100010000	3
51	0001000001001001	1	0100000100100001	1	0001000001001001	1	0100000100100001	1
52	0010000100100010	1	0010000100100010	1	1000000100100010	1	1000000100100010	1
53	0010000100010001	1	0010000100010001	1	1000000100010001	1	1000000100010001	1
54	0010000010010010	1	0010000010010010	1	1000000010010010	1	1000000010010010	1
55	0010000001000010	1	0010000001000010	1	1000000010001001	1	1000000010001001	1
56	0010000000100001	1	0010000000100001	1	1000000001000010	1	1000000001000010	1
57	0000100000001001	1	0100000010010001	1	0000100000001001	1	0100000010010001	1
58	0001001001000001	1	0001001001000001	1	1000000000100001	1	1000000000100001	1
59	0001000100100001	1	0001000100100001	1	0100000001001001	1	0100000001001001	1
60	0001000010010001	1	0001000010010001	1	1001001000010010	1	1001001000010010	1
61	0001000000100010	1	0001000000100010	1	1001001000001001	1	1001001000001001	1
62	0001000000010001	1	0001000000010001	1	1001000100000010	1	1001000100000010	1
63	0000100000010010	1	0000100000010010	1	1000000001000100	2	1000000001000100	2
64	0000010000000010	1	0000010000000010	1	0100000001001000	2	0100000001001000	2
65	0010010000100000	2	0010010000100000	2	1000010000100000	2	1000010000100000	2
66	0010001000010000	2	0010001000010000	2	1000001000010000	2	1000001000010000	2
67	0010000100001000	2	0100000000100010	1	0010000100001000	2	0100000000100010	1
68	0010000010000100	2	0010000010000100	2	1000000100001000	2	1000000100001000	2
69	0010000000010000	2	0010000000010000	2	1000000010000100	2	1000000010000100	2
70	0001000010001000	2	0100001000100000	2	0001000010001000	2	0100001000100000	2
71	0001001000100000	2	0001001000100000	2	0100000010001000	2	0100000010001000	2
72	0001000000001000	2	0100000100010000	2	0001000000001000	2	0100000100010000	2
73	0001000100010000	2	0001000100010000	2	1000000001000100	3	1000000001000100	3
74	0001000001000100	2	0001000001000100	2	0100000001001000	3	0100000001001000	3
75	0000100100100000	2	0000100100100000	2	1000010000100000	3	1000010000100000	3
76	0000100010010000	2	0000100010010000	2	1000001000010000	3	1000001000010000	3
77	0000100001001000	2	0100000001000100	2	0000100001001000	2	0100000001000100	2
78	0000100000100100	2	0000100000100100	2	1000000100001000	3	1000000100001000	3
79	0000100000000100	2	0000100000000100	2	1000000010000100	3	1000000010000100	3
80	0000100000000100	3	0000100000000100	3	0100000010001000	3	0100000010001000	3
81	0000100000100100	3	0000100000100100	3	1000100001000000	4	1000100001000000	4
82	0000100001001000	3	0100000001000100	3	0000100001001000	3	0100000001000100	3
83	0000100010010000	3	0000100010010000	3	1000000010001000	3	1000000010001000	3
84	0000100100100000	3	0000100100100000	3	1001001001001000	2	1001001001001000	2
85	0001000000001000	3	0100000100010000	3	0001000000001000	3	0100000100010000	3
86	0001000001000100	3	0001000001000100	3	1001001000100100	2	1001001000100100	2
87	0001000010001000	3	0100001000100000	3	0001000010001000	3	0100001000100000	3
88	0001000100010000	3	0001000100010000	3	1001001001001000	3	1001001001001000	3
89	0001001000100000	3	0001001000100000	3	1001000010000001	1	1001000010000001	1
90	0010000000010000	3	0010000000010000	3	1000100100010010	1	1000100100010010	1
91	0010000010000100	3	0010000010000100	3	1000100100001001	1	1000100100001001	1
92	0010000100001000	3	0100000000010001	1	0010000100001000	3	0100000000010001	1
93	0010001000010000	3	0010001000010000	3	1000100010000010	1	1000100010000010	1
94	0010010000100000	3	0010010000100000	3	1000100001000001	1	1000100001000001	1

Copyright International Organization for Standardization
Provided by IHS under license with ISO
No reproduction or networking permitted without license from IHS
Not for Resale

Table G.1 — Main Conversion Table (continued)

8-bit byte	State 1		State 2		State 3		State 4	
	Code Word msb lsb	Next State	Code Word msb lsb	Next State	Code Word msb lsb	Next State	Code Word msb lsb	Next State
95	0000001000000010	1	0100100100000010	1	1000010010010010	1	0100100100000010	1
96	0000000100000001	1	0100100010000001	1	1000010010001001	1	0100100010000001	1
97	0010010010001001	1	0100010000100000	2	0010010010001001	1	0100010000100000	2
98	0010010010010010	1	0010010010010010	1	1001001000000100	2	1001001000000100	2
99	0010010001000010	1	0010010001000010	1	1001001000100100	3	1001001000100100	3
100	0010010000100001	1	0010010000100001	1	1000010001000010	1	1000010001000010	1
101	0010001001001001	1	0100010010000010	1	0010001001001001	1	0100010010000010	1
102	0010001000100010	1	0010001000100010	1	1000010000100001	1	1000010000100001	1
103	0010001000010001	1	0010001000010001	1	1000001001001001	1	1000001001001001	1
104	0010000100010010	1	0010000100010010	1	1000001000100010	1	1000001000100010	1
105	0010000010000010	1	0010000010000010	1	1000001000010001	1	1000001000010001	1
106	0010000100001001	1	0100001000010000	2	0010000100001001	1	0100001000010000	2
107	0010000001000001	1	0010000001000001	1	1000000100010010	1	1000000100010010	1
108	0001001001000010	1	0001001001000010	1	1000000100001001	1	1000000100001001	1
109	0001001000100001	1	0001001000100001	1	1000000010000010	1	1000000010000010	1
110	0001000100100010	1	0001000100100010	1	1000000001000001	1	1000000001000001	1
111	0001000100010001	1	0001000100010001	1	0100000010001001	1	0100000010001001	1
112	0001000010010010	1	0001000010010010	1	1001001001001001	1	1001001001001001	1
113	0001000001000010	1	0001000001000010	1	1001001000100010	1	1001001000100010	1
114	0001000010001001	1	0100010000100000	3	0001000010001001	1	0100010000100000	3
115	0001000000100001	1	0001000000100001	1	1001001000010001	1	1001001000010001	1
116	0000100100100001	1	0000100100100001	1	1001000100010010	1	1001000100010010	1
117	0000100010010001	1	0000100010010001	1	1001000100001001	1	1001000100001001	1
118	0000100001001001	1	0100010001000001	1	0000100001001001	1	0100010001000001	1
119	0000100000100010	1	0000100000100010	1	1000100100100100	2	1000100100100100	2
120	0000100000010001	1	0000100000010001	1	1000100100000100	2	1000100100000100	2
121	0000010000001001	1	0100001001000010	1	0000010000001001	1	0100001001000010	1
122	0000010000010010	1	0000010000010010	1	1000100000100000	2	1000100000100000	2
123	0010010010000100	2	0010010010000100	2	1000010010000100	2	1000010010000100	2
124	0010010000010000	2	0010010000010000	2	1000010000010000	2	1000010000010000	2
125	0010001000001000	2	0100001000100001	1	0010001000001000	2	0100001000100001	1
126	0010001001000100	2	0010001001000100	2	1000001001000100	2	1000001001000100	2
127	0001000100001000	2	0100000100100010	1	0001000100001000	2	0100000100100010	1
128	0010000100100100	2	0010000100100100	2	1000001000001000	2	1000001000001000	2
129	0000100010001000	2	0100000100010001	1	0000100010001000	2	0100000100010001	1
130	0010000100000100	2	0010000100000100	2	1000000100100100	2	1000000100100100	2
131	0010000000100000	2	0010000000100000	2	1001001000000100	3	1001001000000100	3
132	0001001000010000	2	0001001000010000	2	1000100100100100	3	1000100100100100	3
133	0000100000001000	2	0100000010010010	1	0000100000001000	2	0100000010010010	1
134	0001000010000100	2	0001000010000100	2	1000100000100000	3	1000100000100000	3
135	0001000000010000	2	0001000000010000	2	1000010010000100	3	1000010010000100	3
136	0000100100010000	2	0000100100010000	2	1000010000010000	3	1000010000010000	3
137	0000100001000100	2	0000100001000100	2	1000001001000100	3	1000001001000100	3
138	0000010001001000	2	0100000001000010	1	0000010001001000	2	0100000001000010	1
139	0000010010010000	2	0000010010010000	2	1000001000001000	3	1000001000001000	3
140	0000010000100100	2	0000010000100100	2	1001000010000010	1	1001000010000010	1
141	0000010000000100	2	0000010000000100	2	1000000100000100	2	1000000100000100	2
142	0000010000000100	3	0000010000000100	3	1000000100100100	3	1000000100100100	3
143	0000010000100100	3	0000010000100100	3	1000000100000100	3	1000000100000100	3

Copyright International Organization for Standardization
Provided by IHS under license with ISO
No reproduction or networking permitted without license from IHS
Not for Resale

Table G.1 — Main Conversion Table (continued)

8-bit byte	State 1		State 2		State 3		State 4	
	Code Word msb lsb	Next State	Code Word msb lsb	Next State	Code Word msb lsb	Next State	Code Word msb lsb	Next State
144	0000010001001000	3	0100000010000100	2	0000010001001000	3	0100000010000100	2
145	0000010010010000	3	0000010010010000	3	1001000001000000	4	1001000001000000	4
146	0000100000001000	3	0100000000010000	2	0000100000001000	3	0100000000010000	2
147	0000100001000100	3	0000100001000100	3	1000000000100000	2	1000000000100000	2
148	0000100010001000	3	0100000010000100	3	0000100010001000	3	0100000010000100	3
149	0000100100010000	3	0000100100010000	3	1000000000100000	3	1000000000100000	3
150	0001000000010000	3	0001000000010000	3	0100000100001000	3	0100000100001000	3
151	0001000010000100	3	0001000010000100	3	1000000001000000	4	1000000001000000	4
152	0001000100001000	3	0100001000010000	3	0001000100001000	3	0100001000010000	3
153	0001001000010000	3	0001001000010000	3	1001000001000001	1	1001000001000001	1
154	0010000000100000	3	0010000000100000	3	0100000100001000	2	0100000100001000	2
155	0010000100000100	3	0010000100000100	3	1001000100100100	3	1001000100100100	3
156	0010000100100100	3	0010000100100100	3	1000100100100010	1	1000100100100010	1
157	0010001000001000	3	0100000000100001	1	0010001000001000	3	0100000000100001	1
158	0010001001000100	3	0010001001000100	3	1000100100000100	3	0100100100000000	4
159	0010010000010000	3	0010010000010000	3	1001001001000100	2	1001001001000100	2
160	0010010010000100	3	0010010010000100	3	1001001000001000	2	1001001000001000	2
161	0000001000010010	1	0100000000010000	3	1000100100010001	1	0100000000010000	3
162	0000001000001001	1	0100100100100100	2	1000100010010010	1	0100100100100100	2
163	0000000100000010	1	0100100100100100	3	1000100010001001	1	0100100100100100	3
164	0000000010000001	1	0100100100010010	1	1000100001000010	1	0100100100010010	1
165	0010010010010001	1	0010010010010001	1	1001000100100100	2	1001000100100100	2
166	0010010000100010	1	0010010000100010	1	1001000100000100	2	1001000100000100	2
167	0010010001001001	1	0100100100000100	2	0010010001001001	1	0100100100000100	2
168	0010010000010001	1	0010010000010001	1	1001001001000100	3	1001001001000100	3
169	0010001000010010	1	0010001000010010	1	1000100000100001	1	1000100000100001	1
170	0010000100000010	1	0010000100000010	1	1000010010010001	1	1000010010010001	1
171	0010001000001001	1	0100100000100000	3	0010001000001001	1	0100100000100000	3
172	0010000010000001	1	0010000010000001	1	1000010001001001	1	1000010001001001	1
173	0001001000100010	1	0001001000100010	1	1000010000100010	1	1000010000100010	1
174	0001001000010001	1	0001001000010001	1	1000010000010001	1	1000010000010001	1
175	0001000100010010	1	0001000100010010	1	1000001000010010	1	1000001000010010	1
176	0001000010000010	1	0001000010000010	1	1000001000001001	1	1000001000001001	1
177	0001001001001001	1	0100100010000010	1	0001001001001001	1	0100100010000010	1
178	0001000001000001	1	0001000001000001	1	1000000100000010	1	1000000100000010	1
179	0000100100100010	1	0000100100100010	1	1000000010000001	1	1000000010000001	1
180	0000100100010001	1	0000100100010001	1	0100100100001001	1	0100100100001001	1
181	0001000100001001	1	0100100000100000	2	0001000100001001	1	0100100000100000	2
182	0000100010010010	1	0000100010010010	1	0100010010001001	1	0100010010001001	1
183	0000100001000010	1	0000100001000010	1	0100001001001001	1	0100001001001001	1
184	0000100010001001	1	0100010010000100	3	0000100010001001	1	0100010010000100	3
185	0000100000100001	1	0000100000100001	1	1001000000100000	2	1001000000100000	2
186	0000010010010001	1	0000010010010001	1	1000100100001000	2	1000100100001000	2
187	0000010000100010	1	0000010000100010	1	1000100010000100	2	1000100010000100	2
188	0000010001001001	1	0100100001000001	1	0000010001001001	1	0100100001000001	1
189	0000010000010001	1	0000010000010001	1	1000100000010000	2	1000100000010000	2
190	0000001001001000	2	0100010010000100	2	1000010010001000	2	0100010010000100	2
191	0000001000100100	2	0100010000010000	2	1000010001000100	2	0100010000010000	2
192	0000001000000100	2	0100001001000100	2	1000010000001000	2	0100001001000100	2

Copyright International Organization for Standardization
Provided by IHS under license with ISO
No reproduction or networking permitted without license from IHS
Not for Resale

Table G.1 — Main Conversion Table (continued)

8-bit byte	State 1		State 2		State 3		State 4	
	Code Word msb lsb	Next State	Code Word msb lsb	Next State	Code Word msb lsb	Next State	Code Word msb lsb	Next State
193	0010010010001000	2	0100010000010000	3	0010010010001000	2	0100010000010000	3
194	0010010001000100	2	0010010001000100	2	1000001001001000	2	1000001001001000	2
195	0010010000001000	2	0100010010010010	1	0010010000001000	2	0100010010010010	1
196	0010001000100100	2	0010001000100100	2	1000001000100100	2	1000001000100100	2
197	0010001000000100	2	0010001000000100	2	1000001000000100	2	1000001000000100	2
198	0010001001001000	2	0100010001000010	1	0010001001001000	2	0100010001000010	1
199	0001001001000100	2	0001001001000100	2	0100001000001000	2	0100001000001000	2
200	0001000100100100	2	0001000100100100	2	1001000000100000	3	1001000000100000	3
201	0001000100000100	2	0001000100000100	2	1000100100001000	3	1000100100001000	3
202	0001001000001000	2	0100010000100001	1	0001001000001000	2	0100010000100001	1
203	0001000000100000	2	0001000000100000	2	1000100010000100	3	1000100010000100	3
204	0000100010000100	2	0000100010000100	2	1000010010001000	3	1000010010001000	3
205	0000100000010000	2	0000100000010000	2	1000010001000100	3	1000010001000100	3
206	0000100100001000	2	0100001000100010	1	0000100100001000	2	0100001000100010	1
207	0000010010001000	2	0100001000010001	1	0000010010001000	2	0100001000010001	1
208	0000010001000100	2	0000010001000100	2	1000001000100100	3	1000001000100100	3
209	0000010000001000	2	0100000100010010	1	0000010000001000	2	0100000100010010	1
210	0000001000000100	3	0100000010000010	1	1000010000001000	3	0100000010000010	1
211	0000001000100100	3	0100000100100100	2	1000001001001000	3	0100000100100100	2
212	0000001001001000	3	0100000100000100	2	1000001000000100	3	0100000100000100	2
213	0000010000001000	3	0100000001000001	1	0000010000001000	3	0100000001000001	1
214	0000010001000100	3	0000010001000100	3	0100001000001000	3	0100001000001000	3
215	0000010010001000	3	0100000000100000	2	0000010010001000	3	0100000000100000	2
216	0000100000010000	3	0000100000010000	3	1001001000010000	3	1001001000010000	3
217	0000100010000100	3	0000100010000100	3	1001000100000100	3	1001000100000100	3
218	0000100100001000	3	0100000100000100	3	0000100100001000	3	0100000100000100	3
219	0001000000100000	3	0001000000100000	3	0100000100001001	1	0100000100001001	1
220	0001000100000100	3	0001000100000100	3	1001001000010000	2	1001001000010000	2
221	0001000100100100	3	0001000100100100	3	1001000100001000	2	1001000100001000	2
222	0001001000001000	3	0100000100100100	3	0001001000001000	3	0100000100100100	3
223	0001001001000100	3	0001001001000100	3	1001001000001000	3	1001001000001000	3
224	0010001000000100	3	0010001000000100	3	1000100000010000	3	1000100000010000	3
225	0010001000100100	3	0010001000100100	3	1001001001000010	1	1001001001000010	1
226	0010001001001000	3	0100001001000100	3	0010001001001000	3	0100001001000100	3
227	0010010000001000	3	0100100100000100	3	0010010000001000	3	0100100100000100	3
228	0010010001000100	3	0010010001000100	3	1001000100001000	3	1001000100001000	3
229	0010010010001000	3	0100000000100000	3	0010010010001000	3	0100000000100000	3
230	0010000001000000	4	0010000001000000	4	1001001000100001	1	1001001000100001	1
231	0000001001001001	1	0100100100100010	1	1001000100100010	1	0100100100100010	1
232	0000001000100010	1	0100100010000100	2	1001000100010001	1	0100100010000100	2
233	0000001000010001	1	0100100000010000	2	1001000010010010	1	0100100000010000	2
234	0000000100010010	1	0100000001000000	4	1001000010001001	1	0100000001000000	4
235	0000000100001001	1	0100100100010001	1	1001000001000010	1	0100100100010001	1
236	0000000010000010	1	0100100010010010	1	1001000000100001	1	0100100010010010	1
237	0000000001000001	1	0100100001000010	1	1000100100100001	1	0100100001000010	1
238	0010010000010010	1	0010010000010010	1	1000100010010001	1	1000100010010001	1
239	0010001000000010	1	0010001000000010	1	1001000010000100	3	1001000010000100	3
240	0010010000001001	1	0100100010000100	3	0010010000001001	1	0100100010000100	3
241	0010000100000001	1	0010000100000001	1	1001000010000100	2	1001000010000100	2

Copyright International Organization for Standardization
Provided by IHS under license with ISO
No reproduction or networking permitted without license from IHS
Not for Resale

Table G.1 — Main Conversion Table (concluded)

8-bit byte	State 1		State 2		State 3		State 4	
	Code Word msb lsb	Next State	Code Word msb lsb	Next State	Code Word msb lsb	Next State	Code Word msb lsb	Next State
242	0001001000010010	1	0001001000010010	1	1000000010000000	4	1000000010000000	4
243	0001000100000010	1	0001000100000010	1	1000100001001001	1	1000100001001001	1
244	0001001000001001	1	0100100000100001	1	0001001000001001	1	0100100000100001	1
245	0001000010000001	1	0001000010000001	1	1000100000100010	1	1000100000100010	1
246	0000100100010010	1	0000100100010010	1	1000100000010001	1	1000100000010001	1
247	0000100010000010	1	0000100010000010	1	1000010000010010	1	1000010000010010	1
248	0000100100001001	1	0100010010010001	1	0000100100001001	1	0100010010010001	1
249	0000100001000001	1	0000100001000001	1	1000010000001001	1	1000010000001001	1
250	0000010010010010	1	0000010010010010	1	1000001000000010	1	1000001000000010	1
251	0000010001000010	1	0000010001000010	1	1000000100000001	1	1000000100000001	1
252	0000010010001001	1	0100010000100010	1	0000010010001001	1	0100010000100010	1
253	0000010000100001	1	0000010000100001	1	0100100010001001	1	0100100010001001	1
254	0000001001000100	2	0100010000010001	1	1001000000010000	2	0100010000010001	1
255	0000001000001000	2	0100001000010010	1	1000100100010000	2	0100001000010010	1

DRAFT

--`,,```,,,,````-`-`,,`,,`,`,,`---

Copyright International Organization for Standardization
Provided by IHS under license with ISO
No reproduction or networking permitted without license from IHS
Not for Resale

Table G.2 — Substitution Table

8-bit byte	State 1		State 2		State 3		State 4	
	Code Word msb lsb	Next State	Code Word msb lsb	Next State	Code Word msb lsb	Next State	Code Word msb lsb	Next State
0	0000010010000000	4	0000010010000000	4	0100100001001000	2	0100100001001000	2
1	0000100100000000	4	0000100100000000	4	0100100001001000	3	0100100001001000	3
2	0001001000000000	4	0001001000000000	4	0100100000001001	1	0100100000001001	1
3	0000001001000000	4	0100010000000001	1	1000001000000000	4	0100010000000001	1
4	0000000100100000	3	0100100000000010	1	1001000000000100	3	0100100000000010	1
5	0000000010010000	3	0100001000000000	4	1001000000100100	3	0100001000000000	4
6	0000000001001000	3	0100100000000100	2	1001000001001000	3	0100100000000100	2
7	0000000001001000	2	0100000100000000	4	1001000000000100	2	0100000100000000	4
8	0000000010010000	2	0100100010010000	3	1001000000100100	2	0100100010010000	3
9	0000000100100000	2	0100100000100100	2	1001000001001000	2	0100100000100100	2
10	0000010001000000	4	0000010001000000	4	1001001001000000	4	1001001001000000	4
11	0000100010000000	4	0000100010000000	4	1000100001001000	3	1000100001001000	3
12	0001000100000000	4	0001000100000000	4	0100010001001000	3	0100010001001000	3
13	0010001000000000	4	0010001000000000	4	1000100000000100	3	1000100000000100	3
14	0000001000100000	3	0100100000000100	3	1001000010010000	3	0100100000000100	3
15	0000000100010000	3	0100100010010000	2	1001000100100000	3	0100100010010000	2
16	0000000010001000	3	0100001000000001	1	0100100000001000	3	0100001000000001	1
17	0000000001000100	3	0100010000000010	1	0100100010001000	3	0100010000000010	1
18	0000000001000100	2	0100100000100100	3	1001000010010000	2	0100100000100100	3
19	0000000010001000	2	0100100100100000	3	1001000100100000	2	0100100100100000	3
20	0000000100010000	2	0100100100100000	2	0100010001001000	2	0100100100100000	2
21	0000001000100000	2	0100100000010010	1	0100100000001000	2	0100100000010010	1
22	0000010010000001	1	0000010010000001	1	1000100000100100	3	1000100000100100	3
23	0000100100000001	1	0000100100000001	1	1000100010010000	3	1000100010010000	3
24	0001001000000001	1	0001001000000001	1	0100100010001000	2	0100100010001000	2
25	0010010000000001	1	0010010000000001	1	1000100000000100	2	1000100000000100	2
26	0000000001001001	1	0100010000000100	3	1000010000000001	1	0100010000000100	3
27	0000000010010001	1	0100000100000001	1	1000100000000010	1	0100000100000001	1
28	0000000100100001	1	0100010000000100	2	1001000000001001	1	0100010000000100	2
29	0000001001000001	1	0100001000000010	1	1001000000010010	1	0100001000000010	1
30	0000100001000000	4	0000100001000000	4	1000100000100100	2	1000100000100100	2
31	0001000010000000	4	0001000010000000	4	1000100001001000	2	1000100001001000	2
32	0010000100000000	4	0010000100000000	4	0100010000001001	1	0100010000001001	1
33	0000010000100000	3	0000010000100000	3	0100100001001001	1	0100100001001001	1
34	0000001000010000	3	0100010000010010	1	1000100100100000	3	0100010000010010	1
35	0000000100001000	3	0100100000010001	1	1001000000001000	3	0100100000010001	1
36	0000000010000100	3	0100000010000000	4	1001000001000100	3	0100000010000000	4
37	0000010000100000	2	0000010000100000	2	1000001000000001	1	1000001000000001	1
38	0000000010000100	2	0100010000100100	3	1000100010010000	2	0100010000100100	3
39	0000000100001000	2	0100010000100100	2	1000100100100000	2	0100010000100100	2
40	0000001000010000	2	0100100000100010	1	1001000000001000	2	0100100000100010	1
41	0000010001000001	1	0000010001000001	1	1000010000000010	1	1000010000000010	1
42	0000010010000010	1	0000010010000010	1	1000000100000000	4	1000000100000000	4
43	0000100010000001	1	0000100010000001	1	1001000001000100	2	1001000001000100	2
44	0000100100000010	1	0000100100000010	1	1000100000001001	1	1000100000001001	1
45	0001000100000001	1	0001000100000001	1	1001000010001000	3	1001000010001000	3
46	0001001000000010	1	0001001000000010	1	1001000100010000	3	1001000100010000	3

Copyright International Organization for Standardization
Provided by IHS under license with ISO
No reproduction or networking permitted without license from IHS
Not for Resale

Table G.2 — Substitution Table (concluded)

8-bit byte	State 1		State 2		State 3		State 4	
	Code Word msb lsb	Next State	Code Word msb lsb	Next State	Code Word msb lsb	Next State	Code Word msb lsb	Next State
47	0010001000000001	1	0010001000000001	1	1000100000010010	1	1000100000010010	1
48	0010010000000010	1	0010010000000010	1	0100010000001000	3	0100010000001000	3
49	0000000001000010	1	0100100010010001	1	1001000000010001	1	0100100010010001	1
50	0000000010001001	1	0100100001000100	3	1001000000100010	1	0100100001000100	3
51	0000000010010010	1	0100010010010000	3	1001000001001001	1	0100010010010000	3
52	0000000100010001	1	0100010010010000	2	1001000010010001	1	0100010010010000	2
53	0000000100100010	1	0100100001000100	2	1001000100100001	1	0100100001000100	2
54	0000001000100001	1	0100100100100001	1	1001001001000001	1	0100100100100001	1
55	0000001001000010	1	0100100100010000	3	0100001000001001	1	0100100100010000	3
56	0001000001000000	4	0001000001000000	4	1001001000100000	3	1001001000100000	3
57	0010000010000000	4	0010000010000000	4	1001000010001000	2	1001000010001000	2
58	0010010010010000	3	0010010010010000	3	1001000100010000	2	1001000100010000	2
59	0010010001001000	3	0100100100010000	2	0010010001001000	3	0100100100010000	2
60	0010010000100100	3	0010010000100100	3	1001001000100000	2	1001001000100000	2
61	0010010000000100	3	0010010000000100	3	0100001001001000	2	0100001001001000	2
62	0001001001001000	3	0100000010000001	1	0001001001001000	3	0100000010000001	1
63	0001001000100100	3	0001001000100100	3	0100001001001000	3	0100001001001000	3
64	0001001000000100	3	0001001000000100	3	0100010010001000	3	0100010010001000	3
65	0000100100100100	3	0000100100100100	3	0100100100001000	3	0100100100001000	3
66	0000100100000100	3	0000100100000100	3	1000010000000100	3	1000010000000100	3
67	0000100000100000	3	0000100000100000	3	1000010000100100	3	1000010000100100	3
68	0000010010000100	3	0000010010000100	3	1000010001001000	3	1000010001001000	3
69	0000010000010000	3	0000010000010000	3	1000010010010000	3	1000010010010000	3
70	0000001001000100	3	0100001000000100	2	1000100000001000	3	0100001000000100	2
71	0000001000001000	3	0100100000010000	3	1000100010001000	3	0100100000010000	3
72	0000000100100100	3	0100010001000100	3	1000100100010000	3	0100010001000100	3
73	0000000100000100	3	0100001000100100	3	1001000000010000	3	0100001000100100	3
74	0000010000010000	2	0000010000010000	2	1000100001000100	3	1000100001000100	3
75	0001001001001000	2	0100001000000100	3	0001001001001000	2	0100001000000100	3
76	0000010010000100	2	0000010010000100	2	0100010000001000	2	0100010000001000	2
77	0000100000100000	2	0000100000100000	2	0100010010001000	2	0100010010001000	2
78	0010010001001000	2	0100000100000010	1	0010010001001000	2	0100000100000010	1
79	0000100100000100	2	0000100100000100	2	0100100100001000	2	0100100100001000	2
80	0000100100100100	2	0000100100100100	2	1000010000000100	2	1000010000000100	2
81	0001001000000100	2	0001001000000100	2	1000010000100100	2	1000010000100100	2
82	0001001000100100	2	0001001000100100	2	1000010001001000	2	1000010001001000	2
83	0010010000000100	2	0010010000000100	2	1000010010010000	2	1000010010010000	2
84	0010010000100100	2	0010010000100100	2	1000100000001000	2	1000100000001000	2
85	0010010010010000	2	0010010010010000	2	0100010001001001	1	0100010001001001	1
86	0000000100000100	2	0100001000100100	2	1000100001000100	2	0100001000100100	2
87	0000000100100100	2	0100010001000100	2	1000100010001000	2	0100010001000100	2

--`,,```,,,,````-`-`,,`,,`,`,,`---

Copyright International Organization for Standardization
Provided by IHS under license with ISO
No reproduction or networking permitted without license from IHS
Not for Resale

Annex H
(normative)

Optimum Power Control

The laser power used for recording a disk is dependent on both the disk and the recorder that are being used, therefore this power shall be determined for the combination of each recorder and disk. Such a determination of the actual optimum recording power P_o and erasing power P_e is called Optimum Power Control (OPC).

To facilitate the OPC, a reference values for the recording power and erasing power are given for each layer individually. These values are encoded as special information in the extended PFI fields in Control Data Zone (see clause 28). These values are the OPC suggested code at the reference speed.

The OPC shall be performed in an area on the disk that is specially reserved for this purpose: the Disk Testing Area (DTA) (see clause 29).

The optimum recording power and the erasing power are the laser power at which jitter is minimized at the measuring conditions of the recorded disk specifications (see clause 13).

Three examples of OPC procedure which make the determination of P_o and P_e easier for practical device electronics is described below.

Example 1: OPC procedure using β value for Layer 1 (Informative)

The asymmetry of the recorded 8/16 modulated data is different for different recording powers and erasing powers, therefore, the optimum recording power and erasing power for the specific combination of device and disk can be obtained by test recording 8/16 modulated data with different recording powers and erasing powers, and by measuring the resulting asymmetry in the HF signal. But directly using the definition of asymmetry is too complicated for the device electronics, therefore, a different parameter is defined as a representation of asymmetry. This parameter β is based on using the AC coupled HF signal before equalisation, and is defined as follows:

$\beta = (A_1+A_2) / (A_1-A_2)$

where (A_1+A_2) : the difference between the peak levels A_1 and A_2 of the HF signal

(A_1-A_2) : the peak-to-peak value of the HF signal

See Figures H.1 to H.3.

Zero asymmetry of the measured HF signal results in $\beta = 0$.

β shall be measured with the PUH for recording as specified in 9.1.2, and asymmetry shall be measured with the PUH for reading as specified in 9.1.1 respectively. This means that for each design, a conversion shall be made from recorder read-out conditions to the conditions of the read-only pick-up.

DRAFT 2009

Copyright International Organization for Standardization
Provided by IHS under license with ISO
No reproduction or networking permitted without license from IHS
Not for Resale

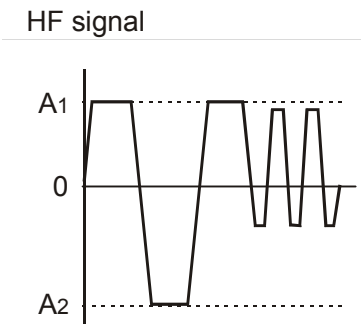

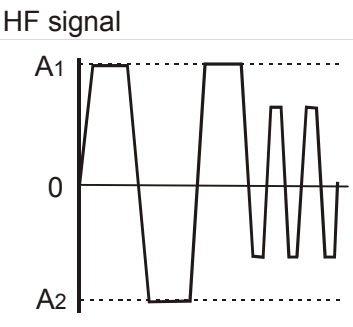

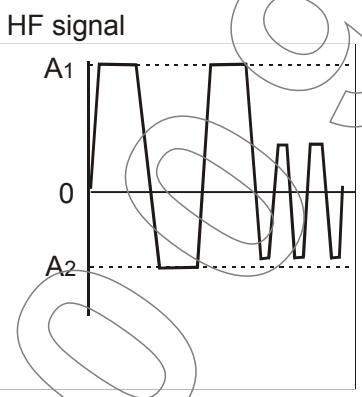

Figure H.1 — $\beta < 0$ (Low power) *Figure H.2 — $\beta = 0$* *Figure H.3 — $\beta > 0$ (High power)*

Example 2: OPC procedure using γ value (Informative)

The example 2 described below may be effective to determine P_o and P_e easier for practical recorder drive electronics.

To obtain the accurate OPC results, the modulation versus recording power curve m(Pw) shall be determined in a power range with sufficient variation of the modulation as a function of the power with the normalized slope γ.

The OPC procedure determines the value Ptarget of the power for γ = γtarget for the supposed actual combination between disk and recorder.

To facilitate the OPC procedure, the values ε and Pind are obtained from the special information in the extended PFI fields in Control Data Zone. These values can be used as starting values in test recordings by each drive for the determination of the actual optimum values P_o and P_e. The relevance of the parameters for determining P_o and P_e is shown in the following formulas and Figure H.4.

m = I14/I14H	:	Modulated amplitude of the HF signal
$\gamma = (dm/dPw) \times (Pw/m)$	:	Normalized slope of the function m(Pw)
Pind	:	Recording power stored in the OPC suggested code field
ρ	:	Multiplication factor to obtain Po
ε	:	Erasing/recording power ratio stored in the OPC suggested code field
Ptarget = Pw (at γtarget)	:	Target recording power reproduced at γ = γtarget by each disk and recorder combination
$Po = \rho \times Ptarget$	:	Optimum recording power reproduced by each disk and recorder combination
$Pe = \varepsilon \times Po$	:	Optimum erasing power reproduced by each disk and recorder combination

DRAFT 2009

Copyright International Organization for Standardization
Provided by IHS under license with ISO
No reproduction or networking permitted without license from IHS
Not for Resale

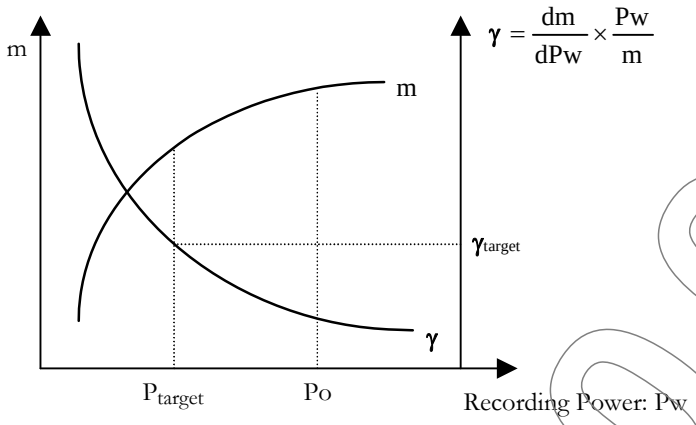

Figure H.4 — Modulation and γ versus Power function

Example 3: OPC procedure using Ke value for Layer 0 (Informative)

The example described below is effective to determine Po and Pe for Layer 0. This procedure (Ke method) consists of two steps.

Step-1 (Pe-OPC procedure):

Step-1 is the procedure to determine Pe value using Ke value.

To obtain the accurate OPC results, the pre-recorded base marks are erased with various DC erasing powers. Pe is obtained by using the Pe-target value and Ke value.

Step1-1 (Pre-recording): The 8/16 modulated marks are pre-recorded by the recoding power Pind and erasing power (= ε ×Pind). Pind and ε value are stored in the OPC suggested code field.

Step1-2 (DC erasing): Those marks are erased with various DC erasing power around ε × Pind/Ke. By measurements of the residual modulation m1 at each DC erasing power, the normalized slope parameter γe is derived:

$\gamma e(P_{DC}) = (dm1/dP_{DC}) \times (P_{DC}/m1)$, where $m1 = m1(P_{DC})$

Step1-3 (Pe-determination): Pe-target is determined as the DC erasing power at the minimum γe (γe-min).

Pe is obtained by:

Pe = Ke × Pe-target

The relevance of the parameters for determining Pe is shown in the following formulas and Figure H.5.

m1 = I14/I14H: Residual modulation amplitude of the HF signal after DC erasing

$\gamma e = (dm1/dP_{DC}) \times (P_{DC}/m1)$: Normalized slope of the function $m1(P_{DC})$

Pind: Recording power stored in the OPC suggested code field

Ke*: Multiplication factor to obtain Pe stored in the OPC suggested code

ε*: Erasing/recording power ratio stored in the OPC suggested code

Pe-target: Target erasing power for each disk and recorder combination

Copyright International Organization for Standardization
Provided by IHS under license with ISO
No reproduction or networking permitted without license from IHS
Not for Resale

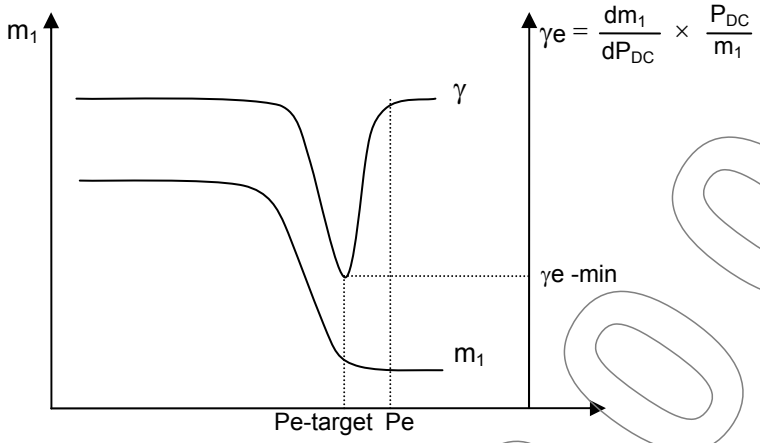

Figure H.4 — Residual modulation and γe versus DC erase Power function

Step-2 (Po determination):

Step-2 is the procedure to determine Po value using ε value.

For accurate Po-OPC procedure, the test marks are recorded with various recording power around Recording power (Pind) stored in the OPC suggested code field, and the erasing power Pe obtained by Step-1.

Po value is calculated by using ε value in the OPC suggested code field, and erasing power Pe obtained by Step-1.

Po is obtained by:

$Po = Pe/\varepsilon$

where;

ε : Erasing/recording power ratio stored in the OPC suggested code field

Pe : Erasing power obtained by Step-1

DRAFT 2009

Copyright International Organization for Standardization
Provided by IHS under license with ISO
No reproduction or networking permitted without license from IHS
Not for Resale

Annex I
(normative)

Measurement of the groove wobble amplitude

The wobble amplitude in nanometres shall be derived from the Normalized Wobble signal (NWO) as shown below.

I.1 Wobble signal (WOb)

The wobble signal shall be calculated from the following equation.

$$WOb / 2 = (RPS / 2) \sin (2\pi a/T_p)$$

therefore

$$WOb = RPS \sin (2\pi a/T_p) \qquad (I)$$

where (see Figure I.1)

WOb: the peak to peak value of the wobble signal when neighbouring wobbles are in phase (minimum value)

RPS: the peak to peak value of the radial push-pull signal

a: wobble amplitude in nanometres

T_p: track pitch in nm

therefore

$$NWO = WOb / RPS = \sin (2\pi a/ T_p) \qquad (II)$$

Due to this normalization, the dependency on groove geometry, spot shape and optical aberrations have been eliminated.

I.2 Wobble amplitude

By the definition in equation (II) above, the relation between NWO and the wobble amplitude for the track pitch of 0,74 µm is:

Lower limit: 0,08 which corresponds to 9 nm
Upper limit: 0,14 which corresponds to 17 nm

DRAFT 2009

Copyright International Organization for Standardization
Provided by IHS under license with ISO
No reproduction or networking permitted without license from IHS
Not for Resale

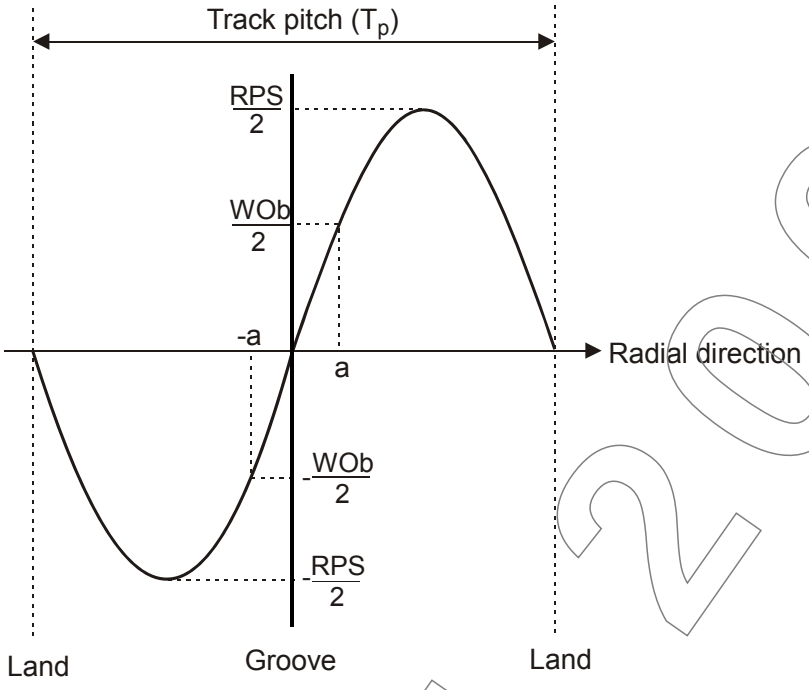

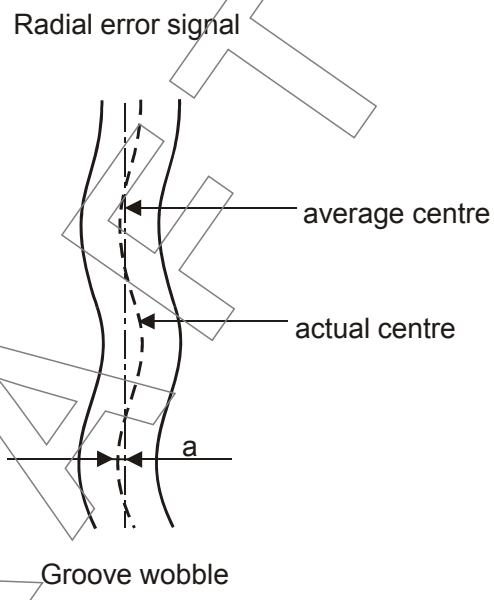

Figure I.1 — Groove wobble signal

DRAFT 2009

Copyright International Organization for Standardization
Provided by IHS under license with ISO
No reproduction or networking permitted without license from IHS
Not for Resale

Annex J
(normative)

Measurement methods for the operational signals for an unrecorded disk

The following measurement methods shall be used for the measurement of the operational signals of an unrecorded disk:

- Focusing method : Astigmatic method
- Tracking method : Push-pull method
- Land Pre-Pit detection method : Push-pull method
- Wobble signal detection method : Push-pull method

J.1 Condition of the summing amplifier in the measurement circuit

For the measurements of

Radial push-pull tracking error signal,

Land Pre-Pit amplitude,

the output level of the summing amplifier shall be set to zero when the laser diode on the PUH is turned on and no disk is set on the spindle.

J.2 Condition of the differential amplifier in the measurement circuit

For the measurements of

Radial push-pull tracking error signal,

Land Pre-Pit amplitude,

Wobble signal,

the output gain of each photo-detector pre-amplifier and the differential balance shall be adjusted to equalize each AC signal amplitude.

J.3 Output gain of the summing and the differential amplifiers

For the normalization of

Radial push-pull tracking error signal,

Land Pre-Pit amplitude,

the output gain of the summing and the differential amplifiers shall be exactly equal.

DRAFT 2009

--`,,```,,,,````-`-`,,`,,`,`,,`---

Copyright International Organization for Standardization
Provided by IHS under license with ISO
No reproduction or networking permitted without license from IHS
Not for Resale

DRAFT 2009

Copyright International Organization for Standardization
Provided by IHS under license with ISO
No reproduction or networking permitted without license from IHS
Not for Resale

Annex K
(normative)

NBCA Code

K.1 Location of NBCA and Lead-in Zone

The NBCA shall be located between 22,71 ± 0,06 mm and 23,51 ± 0,06 mm from the centre of the centre hole, see Figure K.1. The recordings in the Lead-in Zone shall be performed from the sector number (02D5B0) when the NBCA-Code is applied.

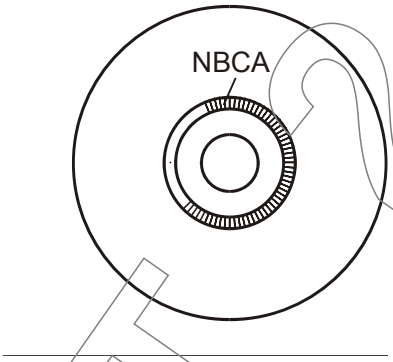

Figure K.1 — Outline of NBCA

K.2 Writing form

The NBCA shall be written with a series of low reflectance stripes arranged in the circumferential direction.

Each of the stripes shall extend fully across the NBCA in the radial direction.

K.3 Modulation method

Data bits written in the NBCA-Code are encoded by phase encoding into NBCA-Code channel bits. In the phase encoding, a data bit ZERO shall be changed into NBCA-Code channel bits of 01 and a data bit ONE shall be changed into NBCA-Code channel bits of 10. The NBCA-Code channel bit train shall be modulated by the RZ modulation method. The low reflectance stripes shall be formed corresponding to pulses after the RZ modulation process. The low reflectance stripes shall not exceed half of the NBCA-Code channel bit period.

The phase encoding method specified above shall be applied to information data, 4 check bytes of Error Detection Code (EDC_{NBCA}) and 16 bytes of Error Correction Code (ECC_{NBCA}) in NBCA-Data field. In other fields of NBCA-Data structure, a data bit ZERO shall be changed into NBCA-Code channel bits of 10 and a data bit ONE shall be changed into NBCA-Code channel bits of 01. See K.4 and Figure K.2.

K.4 NBCA-Code structure

The data in the NBCA-Code consists of a NBCA-Preamble field, a NBCA-Data field and a NBCA-Postamble field. All these fields shall be continuously written without gaps, as shown in Figure K.2.

DRAFT 2009

Copyright International Organization for Standardization
Provided by IHS under license with ISO
No reproduction or networking permitted without license from IHS
Not for Resale

K.4.1 NBCA-Preamble field

The NBCA-Preamble field shall consist of 4 bytes of (00) preceded by a NBCA-Sync-Byte (SB_{NBCA}).

K.4.2 NBCA-Data field

In the NBCA-Data field, 16n – 4 bytes of information data (I_0, I_1...I_{16n-5}), 4 check bytes of Error Detection Code (D_0, D_1, D_2, D_3) and 16 bytes of Error Correction Code (C_{00}...C_{03}, C_{10}...C_{13},..., C_{30}...C_{33}) shall be written in this order. Where n is a positive integer not greater than 12. A NBCA-Resync (RS_{NBCA}) shall be inserted before every 4 bytes throughout this field.

K.4.3 NBCA-Postamble field

The NBCA-Postamble field shall consist of 4 bytes of (55) preceded and followed by NBCA-Resync (RS_{NBCA}).

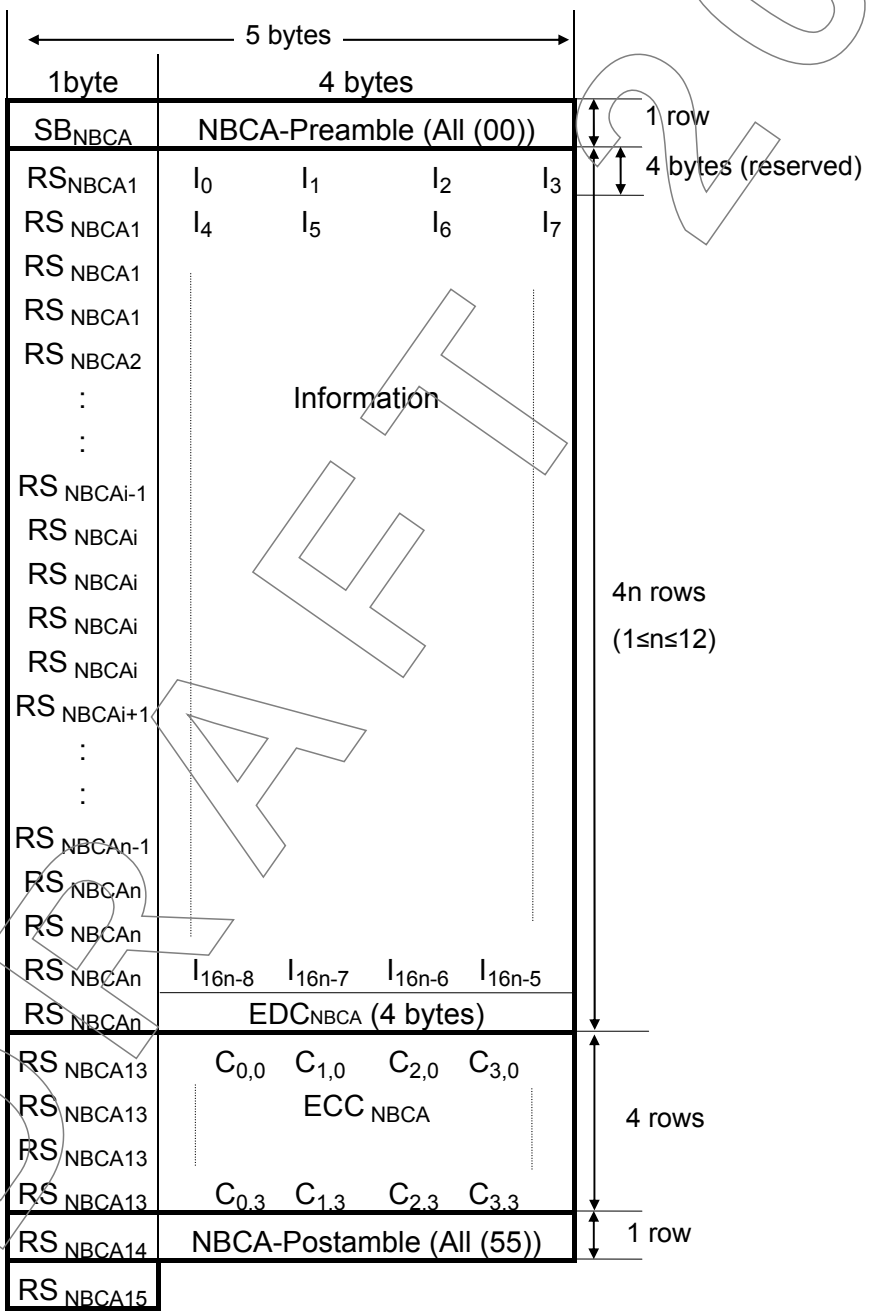

Figure K.2 — NBCA-Data structure

Copyright International Organization for Standardization
Provided by IHS under license with ISO
No reproduction or networking permitted without license from IHS
Not for Resale

K.5 NBCA Error Detection Code (EDC_{NBCA})

4 check bytes of Error Detection Code (D_0, D_1, D_2, D_3) (EDC_{NBCA}) shall be attached to the information data (I_0, I_1....I_{16n-5}). Polynomials EDC_{NBCA} (x) and I_{NBCA} (x) are defined as follows:

$$EDC_{NBCA}(x) = \sum_{i=0}^{31} b_i x^i$$

$$I_{NBCA}(x) = \sum_{i=32}^{128n-1} b_i x^i$$

where, i is the bit number starting with 0 and incremented from the LSB of the last byte of EDC_{NBCA} toward the MSB of the first byte of the information data, and b_i represents the value of i-th bit.

The polynomial EDC_{NBCA} (x) shall be calculated as follows:

$EDC_{NBCA}(x) = I_{NBCA}(x) \bmod G(x)$

where, $G(x) = x^{32} + x^{31} + x^4 + 1$.

K.6 NBCA Error Correction Code (ECC_{NBCA})

A Reed-Solomon type ECC with 4-way interleaving shall be used for the information data and the EDC_{NBCA}.

Polynomials $R_{NBCAj}(x)$ and $I_{NBCAj}(x)$ are defined as follows:

$$R_{NBCAj}(x) = \sum_{i=0}^{3} C_{j,i} x^{3-i}$$

$$I_{NBCAj}(x) = \sum_{i=0}^{4n-2} I_{(j+4i)} x^{51-i} + D_j x^{52-4n}$$

where, I_m represents the value of the m-th information data byte and D_k represents the value of k-th EDC_{NBCA} byte.

The polynomial $R_{NBCAj}(x)$ shall be calculated as follows:

$R_{NBCAj}(x) = I_{NBCAj}(x) \bmod G_{pNBCA}(x)$

$$G_{pNBCA}(x) = \prod_{k=0}^{3} (x + \alpha^k)$$

where, α represents the root of the polynomial;

$G_p(x) = x^8 + x^4 + x^3 + x^2 + 1$

DRAFT 2009

Copyright International Organization for Standardization
Provided by IHS under license with ISO
No reproduction or networking permitted without license from IHS
Not for Resale

K.7 NBCA-Sync-Byte (SB_{NBCA}) and NBCA-Resync (RS_{NBCA})

The NBCA-Sync-Byte (SB_{NBCA}) precedes the NBCA-Preamble. The NBCA-Resync (RS_{NBCA}) shall be inserted before every 4 information bytes, before the EDC_{NBCA}, before the ECC_{NBCA}, and before and after the NBCA-Postamble.

The NBCA-Sync-Byte and the NBCA-Resync shall have patterns as shown in Table K.1.

Table K. 1 — Bit pattern of NBCA-Sync-Byte and NBCA-Resync

Sync Byte /Resync	Bit pattern											
	Fixed pattern (Channel bit)								Sync Code (Data bit)			
	C_{15}	C_{14}	C_{13}	C_{12}	C_{11}	C_{10}	C_9	C_8	b_3	b_2	b_1	b_0
SB_{NBCA}	0	1	0	0	0	1	1	0	0	0	0	0
RS_{NBCA1}	0	1	0	0	0	1	1	0	0	0	0	1
RS_{NBCA2}	0	1	0	0	0	1	1	0	0	0	1	0
⋮	⋮				⋮				⋮			
RS_{NBCAi}	0	1	0	0	0	1	1	0	i			
⋮	⋮				⋮				⋮			
RS_{NBCA15}	0	1	0	0	0	1	1	0	1	1	1	1
	Recorded in RZ mod.								Recorded in PE-RZ mod.			

K.8 NBCA signal specifications

The read-out signal from the NBCA by an optical pick-up specified in the measuring conditions in 9.1.1 and 9.1.2 shall satisfy the NBCA signal specifications. The NBCA read-out signal shall be obtained by summing the currents of the four elements of the quadrant photo detector, when the light beam crosses the tracks.

K.8.1 NBCA signal amplitude

The signal level corresponding to a high and a low reflectance shall be IBH and IBL respectively and the zero level shall be the signal level obtained from the measuring device when no disk is inserted, as shown in Figure K.3.

These signals shall satisfy the following specification.

IBL / IBH : 0,50 max.

K.8.2 NBCA time period

The edge position of the NBCA signal shall be the position at which the NBCA signal crosses the averaged level between IBH and IBL. The time period of NBCA shall satisfy the following specifications, when the rotation speed of a disk is 1 440 rpm (24 Hz). See Figure K.3.

Leading edge time period (TPI) : 8,89n µs ± 2,00 µs (n = 1, 2, 3 or 4)

Pulse length (TL) : 3,00 µs ± 1,50 µs

Copyright International Organization for Standardization
Provided by IHS under license with ISO
No reproduction or networking permitted without license from IHS
Not for Resale

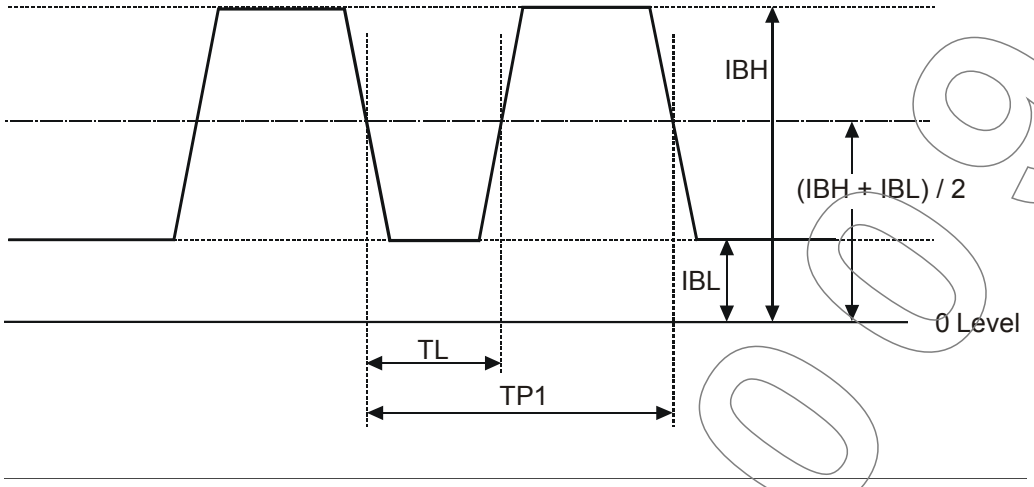

Figure K.3 — Read-out signal from NBCA

K.8.3 NBCA jitter value

The jitter value shall be defined as the normalized standard deviation of the Leading edge time period (TPI) and shall satisfy the following specification.

Jitter value < 8 %

Measuring method:

a) Signal condition: Raw NBCA signal without filtering

b) Rotation speed: 1 440 rpm (24 Hz)

c) Measuring position: r = 23,1 mm (around the centre of NBCA lines)

d) Slice level of Time Interval Analyser shall be set to the half depth of NBCA pulse signal

e) Jitter value: σ/ 8,89

where σ[μs] is the standard deviation of TPI when n = 1

8,89 [μs] is the standard value of TPI when n = 1

K.9 Logical format of information data

The NBCA-Data field shall have (16n – 4) bytes of information data (I_0, I_1...I_{16n-5}) as specified in K.4.2. This information data shall be recorded on a unit of NBCA Record. The length of NBCA Record shall be a multiple of 4 bytes. Each NBCA Record shall consist of NBCA Record ID field, Version number field, Data length field and Record data field as shown in Table K.2.

Table K.2 — NBCA Record format

Relative Byte Position (RBP)	Contents	Number of bytes
0 to 1	NBCA Record ID	2 bytes
2	Version number	1 byte
3	Data length	1 byte
4 to 4m+3	Record data	4m bytes

m : positive integer

RBP 0 to 1 - NBCA Record ID

This field shall be the NBCA Record ID assigned uniquely for each NBCA Record.

Copyright International Organization for Standardization
Provided by IHS under license with ISO
No reproduction or networking permitted without license from IHS
Not for Resale

RBP 2 - Version number

This field shall be the Version number assigned for each NBCA Record independently.

RBP 3 - Data length

This field shall specify the length of Record data.

RBP 4 to 4m+3 - Record data

This field shall be a multiple of 4 bytes and shall contain the Record data only.

The NBCA Record ID shall be defined commonly for all DVD Physical Specifications, and shall be classified into two categories as shown in Table K.3.

Table K.3 — Categories of NBCA Record ID

NBCA Record ID	Definition
(0000) – (7FFF)	Assigned for authorized applications
(8000) – (FFFF)	Assigned for notified applications

When two or more NBCA Records are recorded in the NBCA-Data field, each NBCA Record shall have a different NBCA Record ID and shall be recorded in ascending order of NBCA Record ID. The trailing zeros may be padded in order to adjust for (16n – 4) bytes of information data. An example of information data is shown in Table K.4.

Table K.4 — An example of information data

Byte Position	Contents	Number of bytes
0 to 11	NBCA Record No.1 (Record data length of 8 bytes)	12 bytes
12 to 31	NBCA Record No.2 (Record data length of 16 bytes)	20 bytes
32 to 43	Trailing zeros	12 bytes

DRAFT 2009

Copyright International Organization for Standardization
Provided by IHS under license with ISO
No reproduction or networking permitted without license from IHS
Not for Resale

Annex L
(normative)

Format operation

L.1 Disk state

Three kinds of disk state are defined.

These disk states shall be reflected to the Disk status field (Byte 2) of the Format3 RMD Field0.

L.1.1 Blank state

Blank state specifies the disk state that no data is recorded on the Data Recordable Zone.

L.1.2 Intermediate state

When the disk is in the Intermediate state, all of the following conditions shall be satisfied.

1) At least the RW-Physical format information zone, Reference code zone and Buffer zone 1 are recorded in the Lead-in area.

2) Intermediate marker is located. See L.1.2.1.

3) The "Maximum recorded sector number of the Data Zone" field and the "Maximum recorded sector number of the Data Zone on Layer 0" field in RW-Physical format information zone are set to (030000).

4) "Start sector number of the Middle Zone" field in RW-Physical format information zone is filled with (00).

L.1.2.1 Intermediate marker

Intermediate marker is used to recognize the end point of the logically recorded area when the disk is in the Intermediate state. Intermediate marker is located at the tail of the logically recorded area. Intermediate marker shall consist of 32 ECC blocks. In each ECC block, Zone type (bit b_{27} and b_{26}) of the sector information shall be set to (00) to indicate the Data Zone, and Data type (bit b_{25}) of the sector information shall be set to ONE at least from 1st to 14th sectors as shown in the Figure L.1.

Intermediate marker may be divided on Layer 0 and Layer 1 in some cases.

When the enough area for the Intermediate marker does not exist on the Data Recordable Zone, the size of Intermediate marker can be reduced to n ECC blocks ($0 \leq n \leq 31$). When the reduced Intermediate marker is applied, Format3 RMD field shall be updated.

DRAFT 2009

Copyright International Organization for Standardization
Provided by IHS under license with ISO
No reproduction or networking permitted without license from IHS
Not for Resale

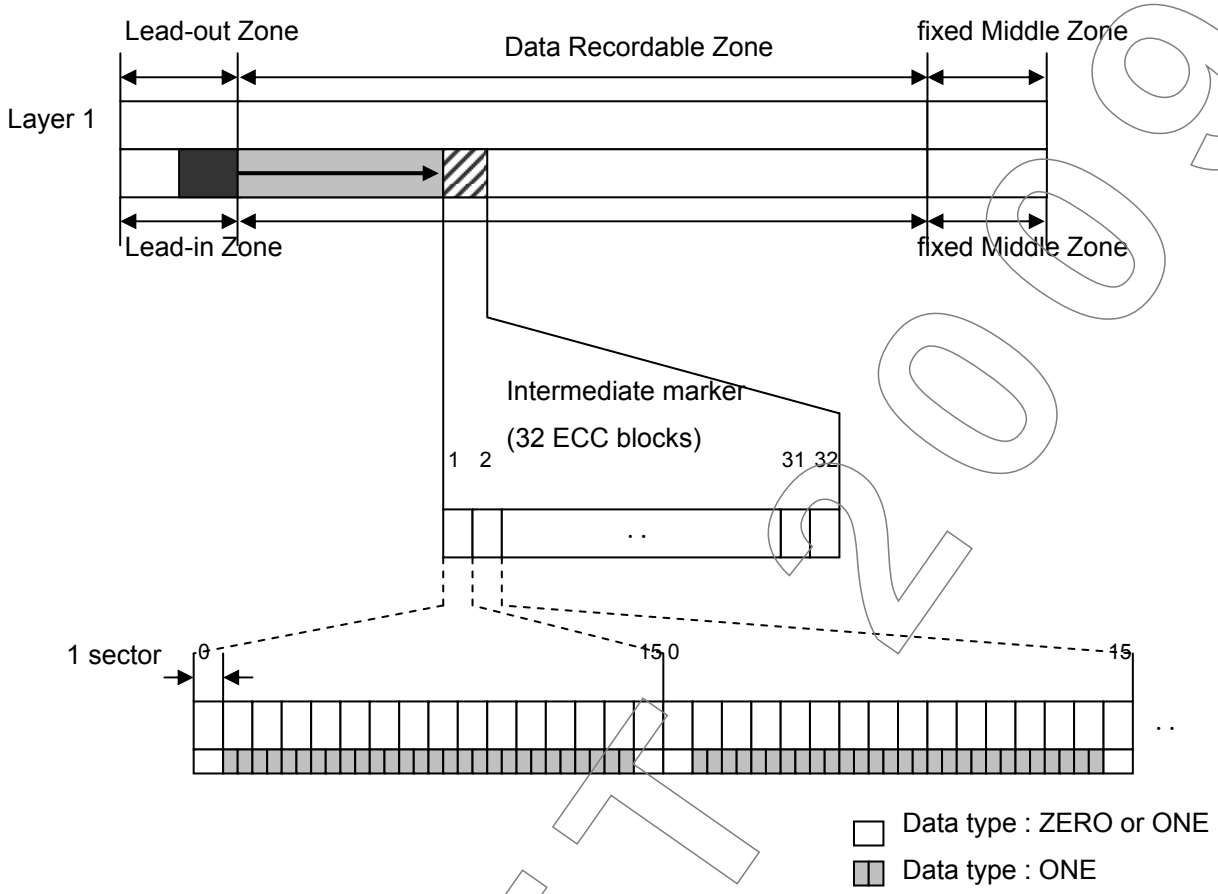

Figure L.1 — Intermediate marker

L.1.3 Complete state

When the disk is in the Complete state, at least one of the following conditions shall be satisfied.

1) Whole zones of Lead-in Zone, Lead-out Zone, fixed Middle Zone, and Data Recordable Zone are physically recorded or

2) Lead-in Zone, Lead-out Zone and shifted Middle Zone are physically recorded, and Data Recordable Zone located between the innermost radius and shifted Middle Zone is physically recorded.

L.2 Format operation

The Format operation is an operation to record data according to the DVD data format. The main data newly recorded in the formatted area shall be set to (00), including superficial formatted area, Lead-out Zone, padded area, fixed Middle Zone or shifted Middle Zone when those area are formatted.

When the formatted area is already in physically recorded state, the main data in the formatted area may not be set to (00).

Except the area intentionally recorded, the area which is not formatted by the Format operation is considered as a logically unrecorded area even if the area is in physically recorded state.

There are six Format operations and the definition of each operation is as shown in Table L.1. The operation status shall be registered in the Disk status code and the Format operation code of RMD

Copyright International Organization for Standardization
Provided by IHS under license with ISO
No reproduction or networking permitted without license from IHS
Not for Resale

recorded in the RMA, see 29.3.3.3. The Format operation shall not be applied for the embossed Control data zone or other embossed areas.

Table L.1 — Format operation

Operation	Definition
Full format	To format the Data Zone with specified size. This operation is applied for Blank state disk, Intermediate state disk or Complete state disk. After this operation, the disk status is in the Complete state, and the area from the beginning of Lead-in Zone to the end of the shifted Middle Zone or fixed Middle Zone, and Lead-out Zone are physically recorded.
Grow format	To format the Data Zone with specified size to increase formatted area. This operation is applied for Complete state disk. After this operation, the disk status is also in the Complete state, and the area from next address of the outermost Data Zone on Layer 0 to the end of the shifted Middle Zone or fixed Middle Zone are physically recorded.
Quick format	To format the area to append user data. This operation is applied for Blank state disk, Intermediate state disk or Complete state disk. After this operation, the disk status is in the Intermediate state, and the area from the middle part of Lead-in Zone to the end of Intermediate marker is physically recorded.
Quick Grow format	To format the area to append user data. This operation is applied for Intermediate state disk or Complete state disk. After this operation, the disk status is in the Intermediate state, and the increased area with specified size and Intermediate marker connected to the tail of Data Zone or Lead-in Zone is physically recorded. Lead-in Zone, fixed Middle Zone, and Lead-out Zone may be maintained.
Close Intermediate state	To Complete the area in the Intermediate state. This operation is applied for Intermediate state disk. After this operation, the disk status is in the Complete state, and the area from the beginning of Lead-in Zone to the end of the shifted Middle Zone or fixed Middle Zone, and Lead-out Zone are physically recorded.
Fast Re-format	This format operation is used to format the Data Zone within the specified area and complete the area. This operation is applied for Blank state disk, Intermediate state disk or Complete state disk. After this operation, the disk status is in the Complete state, and the specified area is physically recorded, and the logically recorded data before this operation within the specified area shall be remained.

DRAFT 2009

Copyright International Organization for Standardization
Provided by IHS under license with ISO
No reproduction or networking permitted without license from IHS
Not for Resale

DRAFT 2009

Copyright International Organization for Standardization
Provided by IHS under license with ISO
No reproduction or networking permitted without license from IHS
Not for Resale

Annex M
(normative)

Measurement method of the Land Pre-Pit signal

M.1 Block diagram for measurement

The measurement method block diagram for measuring the Land Pre-Pit signal is shown in Figure M.1. An example of the Land Pre-Pit detector is shown in Figure M.2.

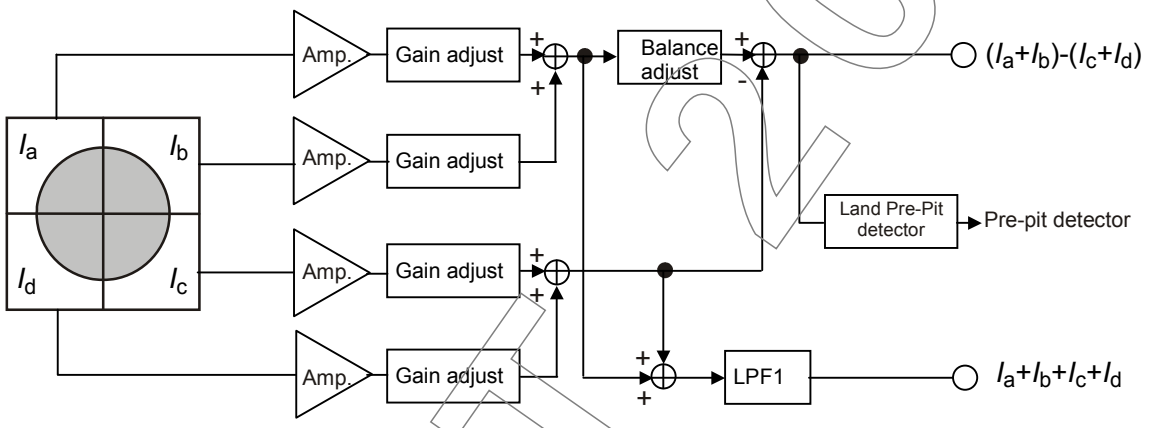

Figure M.1 — Block diagram for measuring the Land Pre-Pit signal

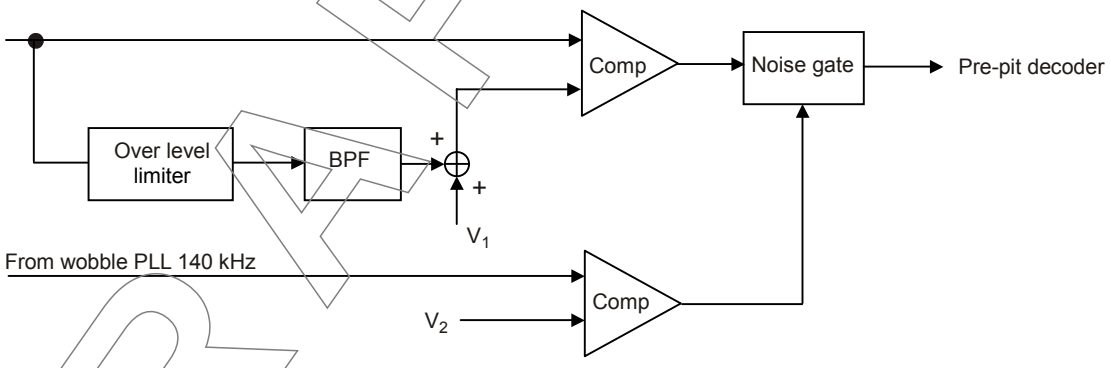

Figure M.2 — Example of the Land Pre-Pit detector

The over level limiter is provided to exclude noise larger than the wobble amplitude.

V_1 and V_2 are proper voltage for each equipment.

Band Pass Filter: 4th order

centre frequency = 140,6 kHz (wobble frequency)

cut-off frequency = ± 42,2 kHz (–3 dB)

Copyright International Organization for Standardization
Provided by IHS under license with ISO
No reproduction or networking permitted without license from IHS
Not for Resale

DRAFT 2009

Copyright International Organization for Standardization
Provided by IHS under license with ISO
No reproduction or networking permitted without license from IHS
Not for Resale

Annex N
(normative)

Construction of Information Zone

The structure of Information Zone and related main parameters are described below.

Examples of the Information Zone structure with Format3 RMD are as shown in Figure N.1, Figure N.2, Figure N.3 and Figure N.4.

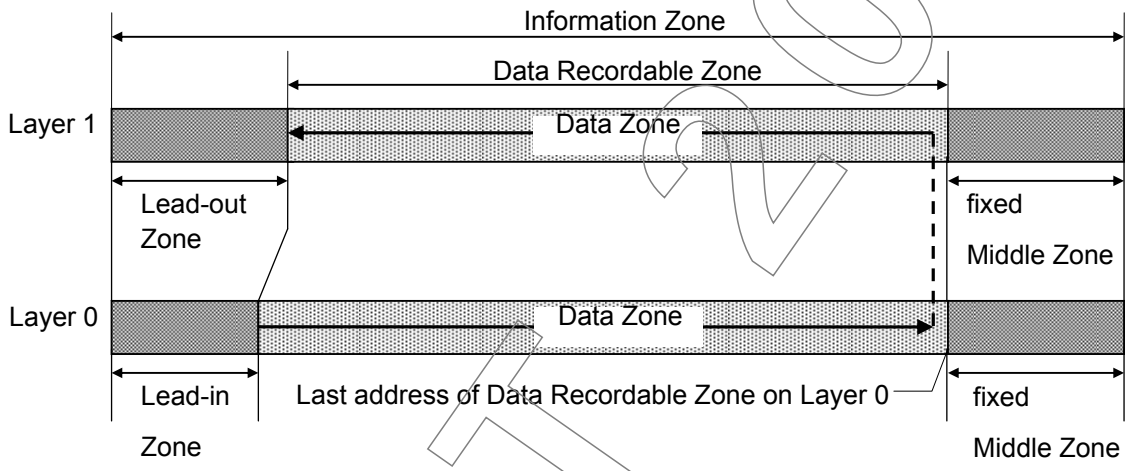

Figure N.1 — Examples of fully recorded Information Zone

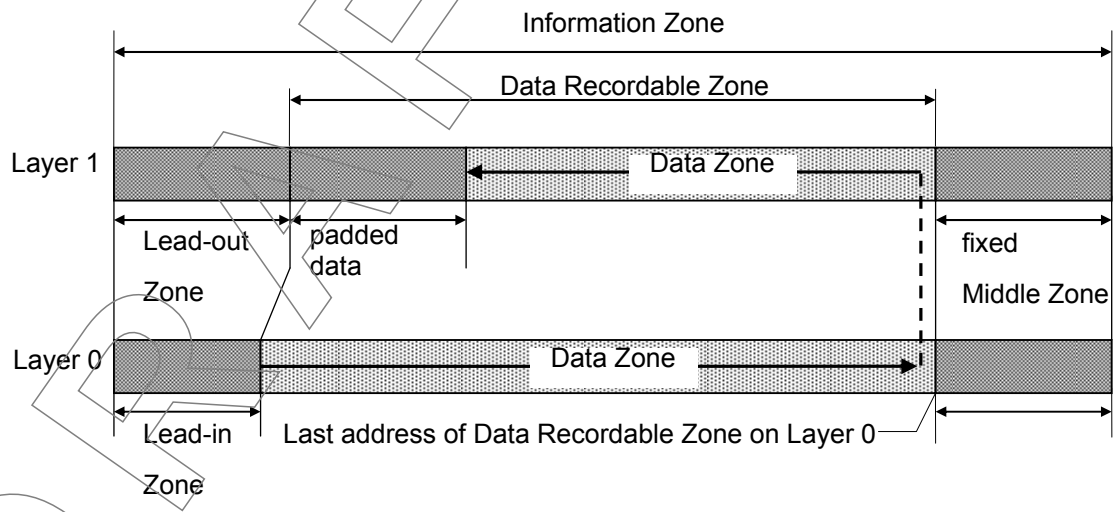

Figure N.2 — Examples of Information Zone with padded data

DEFECTIVE 2009

Copyright International Organization for Standardization
Provided by IHS under license with ISO
No reproduction or networking permitted without license from IHS
Not for Resale

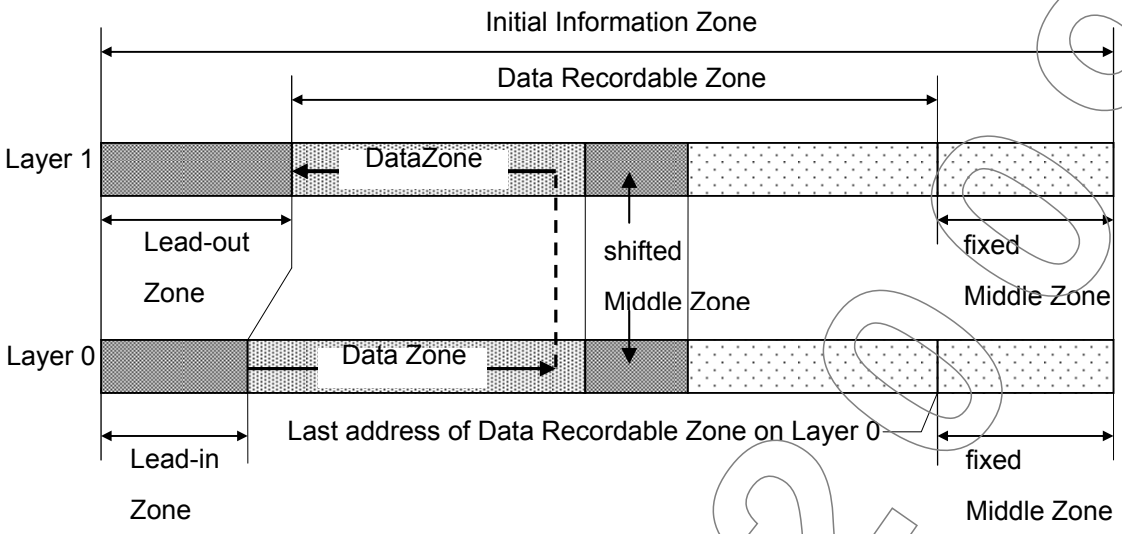

Figure N.3 — Examples of Information Zone with shifted Middle Zone

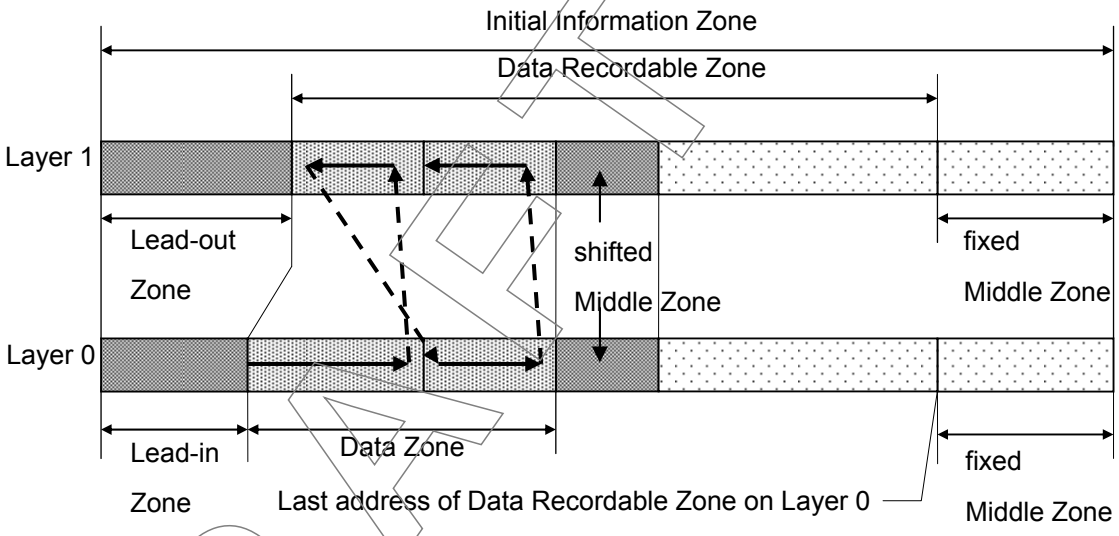

Figure N.4 — Examples of Information Zone with Layer jump recording

DRAFT 2

--`,,```,,,,````-`-`,,`,,`,`,,`---

Copyright International Organization for Standardization
Provided by IHS under license with ISO
No reproduction or networking permitted without license from IHS
Not for Resale

Annex O
(normative)

Recording order

O.1 Recording order for disk testing

The following Recording order for each layer shall be used for disk testing.

- Layer 1 shall be recorded through the recorded Layer 0 area.

- The radial dimension of the area to be recorded on Layer 1 shall be smaller than the recorded area on Layer 0 keeping some clearance.

- When the edge of the recorded area on Layer 0 is shifted by additional recording, the edge of recordable area on Layer 1 can be shifted corresponding to the amount of additional recording on Layer 0.

It is recommended that Layer 0 should be recorded more than 0.5 mm and Layer 1 should be recorded with Clearance more than 0.2 mm from each edge of recorded Layer 0.

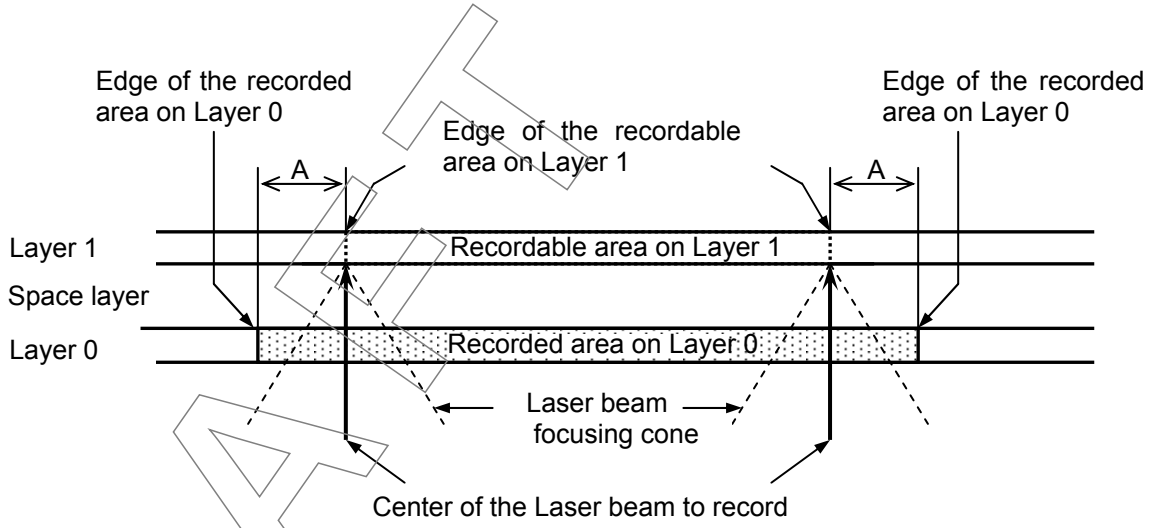

Figure O.1 — Examples of Information Zone with Format4 RMD

NOTE
A is the clearance to keep the recording order.

DRAFT ECMA-0 9

Copyright International Organization for Standardization
Provided by IHS under license with ISO
No reproduction or networking permitted without license from IHS
Not for Resale

DRAFT 2009

Copyright International Organization for Standardization
Provided by IHS under license with ISO
No reproduction or networking permitted without license from IHS
Not for Resale

Annex P
(normative)

Clearance in the number of sectors

P.1 Clearance to keep the Recording order

Clearance to keep the Recording order, which is defined in terms of physical distance, shall be converted into the number of sectors to be implemented in recording devices.

At the outer most location on the disk, the first Physical sector number $\overline{X}$ of Layer 1 is located toward the inner side from the last Physical sector number X of Layer 0 to secure the physical distance as clearance to keep the Recording order.

Relation between physical distance and the number of physical sectors shall be as shown in Figure P.1.

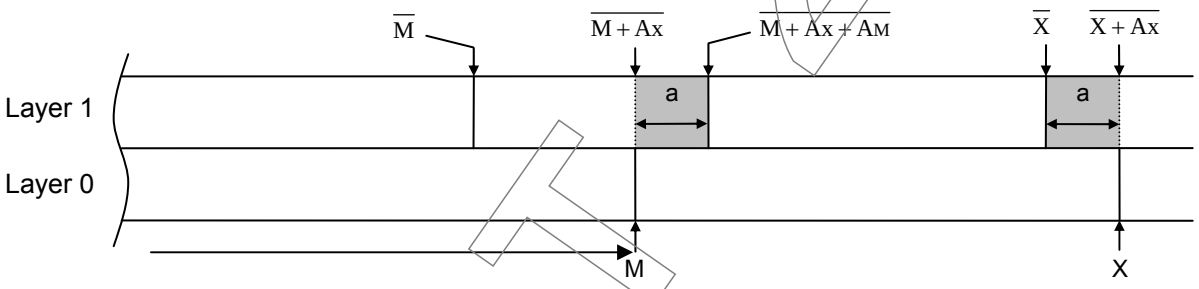

: Clearance to keep the Recording order

X, $\overline{X}$: Physical sector number (PSN) of outer most side. "X" is the last recordable address of Layer 0.

M, $\overline{M}$: Physical sector number (PSN)

Ax : Clearance to keep the Recording order in the number of sectors at "X"
where "$\overline{X+Ax}$" is the PSN of a sector which is located at the same radius of "X".

A_M : Clearance to keep the Recording order in the number of sectors at "M"
where "$\overline{M+Ax}$" is the PSN of a sector which is located at the same radius of "M".

a : Physical distance. "a" is the clearance to keep the Recording order.

R_M : Radius position of "M"

Figure P.1 — Relation between physical distance and number of physical sectors

DRAFT 09

Copyright International Organization for Standardization
Provided by IHS under license with ISO
No reproduction or networking permitted without license from IHS
Not for Resale

P.2 Example of the clearance in the number of sectors (Informative)

It is useful to simplify the clearance in the number of sectors to keep the Recording order from a viewpoint of compatibility between each product.

A_M in Table P.1 should be used for the clearance in the number of sectors to keep the Recording order at the location of M.

Table P.1 — Clearance in the number of sectors to keep Recording order

M		R_M [mm]		A_M	A_X
(030000)	(04318F)	24.00	26.09	(1000)	(23E0)
(043190)	(088F4F)	26.09	32.61	(1400)	
(088F50)	(0DE64F)	32.61	39.13	(1800)	
(0DE650)	(1434FF)	39.13	45.65	(1C00)	
(143500)	(1B7C0F)	45.65	52.17	(2000)	
(1B7C10)		52.17		(23E0)	

DRAFT ISO

Copyright International Organization for Standardization
Provided by IHS under license with ISO
No reproduction or networking permitted without license from IHS
Not for Resale

Annex Q
(normative)

Layer jump recording

Six parameters are specified for Layer jump recording, such as Start sector number of RZone (SSN), Layer jump address on Layer 0 (LJA), Previous Layer jump address on Layer 0 (PLJA), End sector number of RZone (ESN), Last recorded address (LRA), and Jump interval as shown in Figure Q.1 and Figure Q.2. See 29.3.3.2.4.

When Layer jump recording is applied, Buffer block shall be used on each layer respectively in the same way as Block SYNC Guard Area (BSGA) or Linking Loss Area (LLA).

Buffer block consists of 1 ECC block and all the main data shall be set to (00) with Data area attribute.

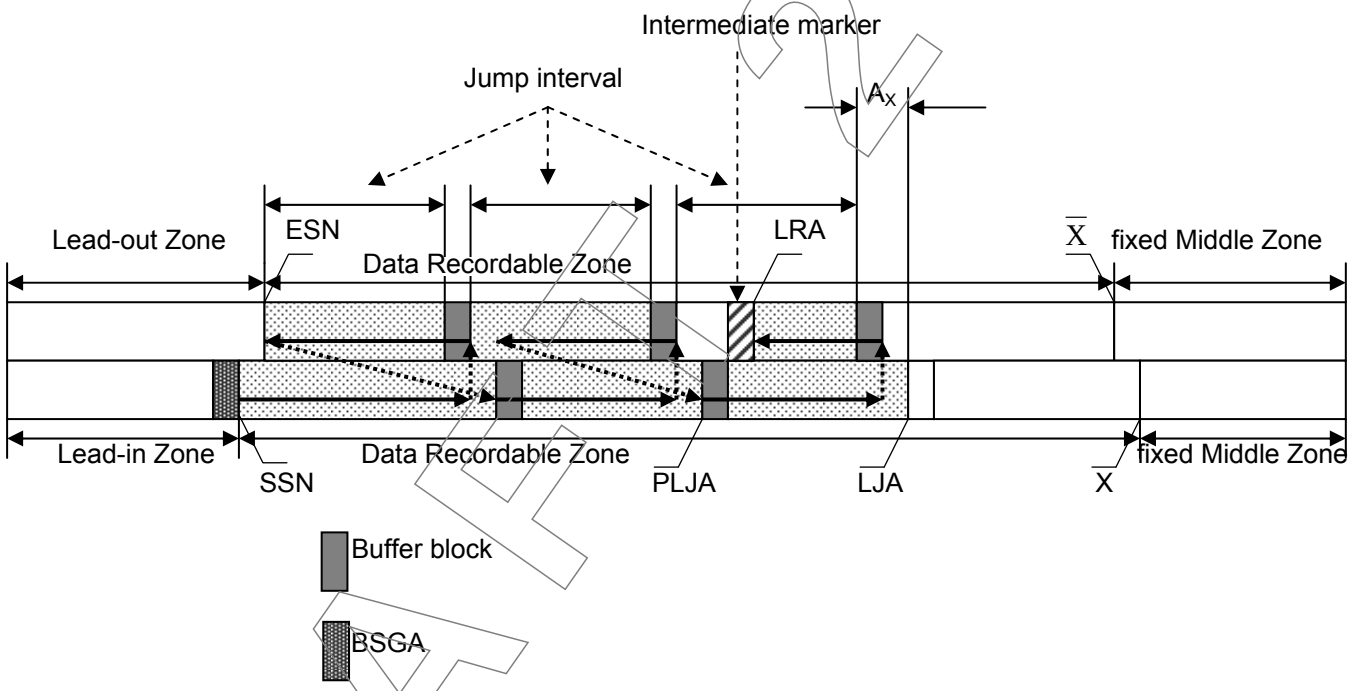

A_X: Clearance to keep the Recording order in the number of sectors at X (See Annex P)

Figure Q.1 — Example of Layer jump recording by setting Jump interval field

DRAFT ONLY

Copyright International Organization for Standardization
Provided by IHS under license with ISO
No reproduction or networking permitted without license from IHS
Not for Resale

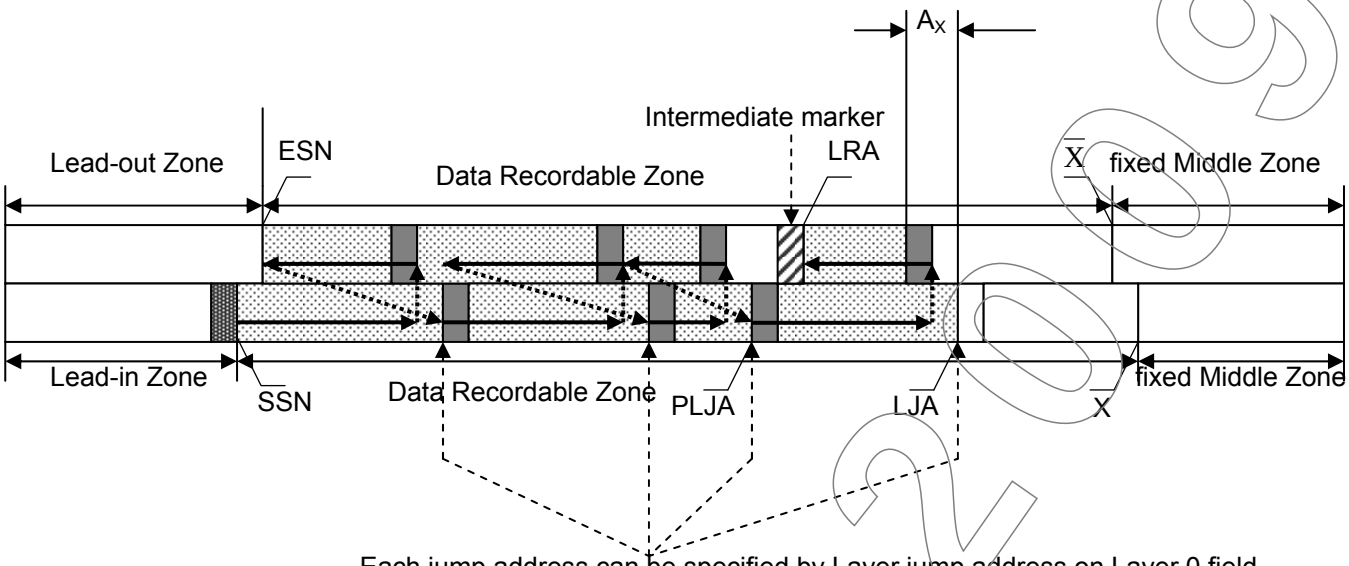

Figure Q.2 — Example of Layer jump recording by setting Layer jump address on Layer 0 field (Jump interval = 0)

DRAFT 2009

Copyright International Organization for Standardization
Provided by IHS under license with ISO
No reproduction or networking permitted without license from IHS
Not for Resale

Annex R
(Informative)

Measurement method of the Space layer thickness in a disk

R.1 Laser focusing method

A laser is focused on each information layer of a disk by an objective lens. The Space layer thickness is determined by measuring the range of the object lens' movement.

R.2 Interferometer method

Light with varying wavelength is irradiated onto a disk. The Space layer thickness is determined by measuring the phase difference between the reflected light from Layer 0 and the reflected light from Layer 1.

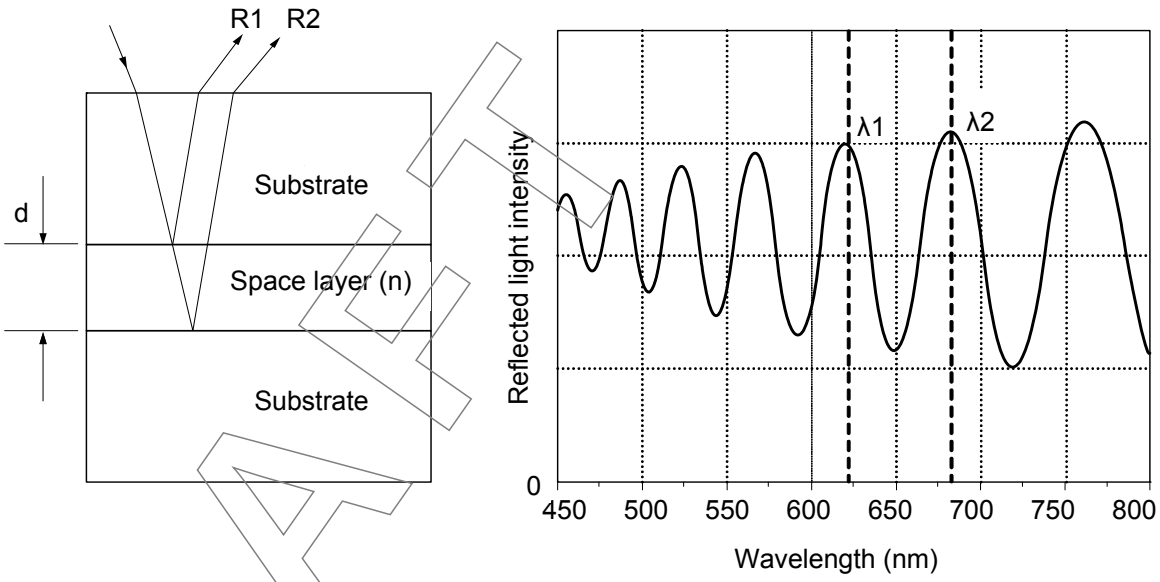

Figure R.1 — Space layer thickness measurement

Refractive Index of the Space layer ; n

Thickness of the Space layer ; d

$$d = \frac{\lambda 1 \cdot \lambda 2}{2n\,(\lambda 1 - \lambda 2)}$$

DRAFT 2009

Copyright International Organization for Standardization
Provided by IHS under license with ISO
No reproduction or networking permitted without license from IHS
Not for Resale

DRAFT 2009

Copyright International Organization for Standardization
Provided by IHS under license with ISO
No reproduction or networking permitted without license from IHS
Not for Resale

Annex S
(informative)

Transportation

S.1 General

As transportation occurs under a wide range of temperature and humidity variations, for differing periods, by many methods of transport and in all parts of the world, it is not possible to specify mandatory conditions for transportation or for packaging.

S.2 Packaging

The form of packaging should be agreed between sender and recipient or, in absence of such an agreement, is the responsibility of the sender. It should take into account the following hazards.

S.2.1 Temperature and humidity

Insulation and wrapping should be designed to maintain the conditions for storage over the estimated period of transportation.

S.2.2 Impact loads and vibrations

a) Avoid mechanical loads that would distort the shape of the disk.

b) Avoid dropping the disk.

c) Disks should be packed in a rigid box containing adequate shock-absorbent material.

d) The final box should have a clean interior and a construction that provides sealing to prevent the ingress of dirt and moisture.

DRAFT 2009

Copyright International Organization for Standardization
Provided by IHS under license with ISO
No reproduction or networking permitted without license from IHS
Not for Resale

DRAFT 2009

--`,,```,,,,````-`-`,,`,,`,`,,`---

Copyright International Organization for Standardization
Provided by IHS under license with ISO
No reproduction or networking permitted without license from IHS

Not for Resale