INTERNATIONAL STANDARD

ISO/IEC 9314-9

First edition
2000-06

Information technology –
Fibre Distributed Data Interface (FDDI) –

Part 9:
Low-cost fibre physical layer medium dependent (LCF-PMD)

Reference number
ISO/IEC 9314-9:2000(E)

Copyright International Organization for Standardization
Reproduced by IHS under license with ISO
No reproduction or networking permitted without license from IHS
Not for Resale

--`,,`,,`-`-`,,`,,`,`,,`---

Copyright International Organization for Standardization
Reproduced by IHS under license with ISO
No reproduction or networking permitted without license from IHS

Not for Resale

INTERNATIONAL STANDARD

ISO/IEC 9314-9

First edition
2000-06

Information technology –
Fibre Distributed Data Interface (FDDI) –

Part 9:
Low-cost fibre physical layer medium dependent (LCF-PMD)

© ISO/IEC 2000

All rights reserved. Unless otherwise specified, no part of this publication may be reproduced or utilized in any form or by any means, electronic or mechanical, including photocopying and microfilm, without permission in writing from the publisher.

ISO/IEC Copyright Office • Case postale 56 • CH-1211 Genève 20 • Switzerland



PRICE CODE T

For price, see current catalogue

--`,,`,,`-`-`,,`,,`,`,,`---

Copyright International Organization for Standardization
Reproduced by IHS under license with ISO
No reproduction or networking permitted without license from IHS

Not for Resale

CONTENTS

Page

FOREWORD 5
INTRODUCTION 6

Clause

1 Scope 7
2 Normative references 8
3 Definitions 9
4 Conventions and abbreviations 13
4.1 Conventions 13
4.2 Abbreviations 13
5 General description 13
5.1 Ring Overview 13
5.2 Environment 14
5.2.1 General 14
5.2.2 Campus inter-building distribution environment 15
5.2.3 Intra-building distribution environment 15
5.2.4 Workstation distribution environment 15
6 Services 18
6.1 General 18
6.2 LCF-PMD–to–PHY services 18
6.2.1 Introduction 18
6.2.2 PM_UNITDATA.request 18
6.2.3 PM_UNITDATA.indication 20
6.2.4 PM_SIGNAL.indication 20
6.3 LCF-PMD-to-SMT services 21
6.3.1 Introduction 21
6.3.2 SM_PM_CONTROL.request 21
6.3.3 SM_PM_BYPASS.request 22
6.3.4 SM_PM_SIGNAL.indication 22
7 Media interface connector specification 23
7.1 Introduction 23
7.2 General information 23
7.2.1 Standardized connector 23
7.2.2 Testing recommendations 23
7.2.3 Station labelling 23
7.3 LCF-MIC receptacle 23
7.4 LCF-MIC plug 23
7.4.1 LCF-MIC ferrule 24

Copyright International Organization for Standardization
Reproduced by IHS under license with ISO
No reproduction or networking permitted without license from IHS
Not for Resale

8 Media signal interface 24
8.1 General 24
8.2 Active output interface 25
8.3 Active input interface 25
8.4 Station bypass interface 25
9 Interface signals 26
9.1 General 26
9.2 Optical receiver 26
9.2.1 Signal_Detect 26
9.3 Optical transmitter 28
10 Cabling interface specification 28
10.1 General 28
10.2 Cabling specification 28
10.2.1 Fibre types 28
10.2.2 Bandwidth and attenuation values 28
10.3 Bypassing 29
10.4 Connectors and splices 29

Annex A (informative) Test methods 30
A.1 General 30
A.2 Active output interface 30
A.2.1 Optical power measurements 30
A.2.2 Optical spectrum measurements 30
A.2.3 Rise/fall response time measurements 30
A.2.4 Jitter measurements 30
A.2.5 Extinction ratio 31
A.3 Active input interface 31
A.4 Distortion and jitter contributions 31
A.5 Distortion and jitter measurements 32
A.5.1 DCD measurements 32
A.5.2 RJ and DDJ measurements 32
A.6 DDJ test pattern for jitter measurements 34

Annex B (informative) Alternative cabling usage 35
B.1 Alternative fibre sizes 35
B.2 Connection losses 35
B.2.1 Loss budgets 35
B.2.2 Test specifications and procedure 36
B.3 Optical bypass switches 36

Annex C (informative) Electrical interface considerations 37

Annex D (informative) Example of system jitter allocation 39
D.1 Jitter sources 39
D.2 Jitter calculation example 39

Copyright International Organization for Standardization
Reproduced by IHS under license with ISO
No reproduction or networking permitted without license from IHS Not for Resale

Annex E (informative) LCF-MIC requirements and testing 41
E.1 Combined LCF-MIC mechanical-optical requirements 41
E.2 LCF-MIC testing definitions and conditions 41
E.3 LCF-MIC receptacle axial pull test 42
E.3.1 Purpose 42
E.3.2 Test method 42
E.4 LCF-MIC receptacle insertion/withdrawal force test 42
E.4.1 Purpose 42
E.4.2 Test method 42
E.5 LCF-MIC receptacle optical repeatability test 42
E.5.1 Purpose 42
E.5.2 Test method 42
E.6 LCF-MIC receptacle optical cross plug repeatability test 43
E.6.1 Purpose 43
E.6.2 Test method 43
E.7 LCF-MIC plug axial pull test 43
E.7.1 Purpose 43
E.7.2 Test method 43
E.8 LCF-MIC plug insertion/withdrawal force test 43
E.8.1 Purpose 43
E.8.2 Test method 43
E.9 LCF-MIC plug off axis pull test 43
E.9.1 Purpose 43
E.9.2 Test method 43
E.10 Cable/LCF-MIC plug pull strength test 43
E.10.1 Purpose 43
E.10.2 Test method 44

Annex F (informative) Alternate Optical Interface Connector 45

Annex G (informative) Labelling considerations 46
G.1 General 46
G.2 FDDI station labelling 46

Bibliography 48

Copyright International Organization for Standardization
Reproduced by IHS under license with ISO
No reproduction or networking permitted without license from IHS Not for Resale

INFORMATION TECHNOLOGY – FIBRE DISTRIBUTED DATA INTERFACE (FDDI) –

Part 9: Low-cost fibre physical layer medium dependent (LCF-PMD)

FOREWORD

ISO (the International Organization for Standardization) and IEC (the International Electrotechnical Commission) form the specialized system for worldwide standardization. National bodies that are members of ISO or IEC participate in the development of International Standards through technical committees established by the respective organization to deal with particular fields of technical activity. ISO and IEC technical committees collaborate in fields of mutual interest. Other international organizations, governmental and non-governmental, in liaison with ISO and IEC, also take part in the work.

In the field of information technology, ISO and IEC have established a joint technical committee, ISO/IEC JTC 1. Draft International Standards adopted by the joint technical committee are circulated to national bodies for voting. Publication as an International Standard requires approval by at least 75 % of the national bodies casting a vote.

Attention is drawn to the possibility that some of the elements of this International Standard may be the subject of patent rights. ISO and IEC shall not be held responsible for identifying any or all such patent rights.

International standard ISO/IEC 9314-9 was prepared by subcommittee 25: Interconnection of information technology equipment, of ISO/IEC joint technical committee 1: Information technology.

International Standards are drafted in accordance with the ISO/IEC Directives, Part 3.

Annexes A, B, C, D, E, F and G are for information only.

ISO/IEC 9314 consists of the following parts, under the general title *Information technology – Fibre Distributed Data Interface (FDDI):*

- *Part 1: Token Ring Physical Layer Protocol (PHY)*
- *Part 2: Token Ring Media Access Control (MAC)*
- *Part 3: Physical Layer Medium Dependent (PMD)*
- *Part 4: Single Mode Fibre Physical Layer Medium Dependent (SMF-PMD)*
- *Part 5: Hybrid Ring Control (HRC)*
- *Part 6: Station Management (SMT)*
- *Part 7: Physical Layer Protocol (PHY-2)*
- *Part 8: Media Access Control-2 (MAC-2)*
- *Part 13: Conformance Test Protocol Implementation – Conformance Statement (CT-PICS) Proforma*
- *Part 20: Abstract Test Suite for FDDI – Physical Medium Dependent Conformance Testing (PMD-ATS)* [1)]
- *Part 21: Abstract Test Suite for FDDI – Physical Layer Protocol Conformance Testing (PHY-ATS)* [1)]
- *Part 25: Abstract test suite for FDDI – Station Management Conformance Testing (SMT-ATS)*
- *Part 26: Abstract Test Suite for FDDI – Media Access Control Conformance Testing (MAC-ATS)* [1)]

_____

1) To be published.

Copyright International Organization for Standardization
Reproduced by IHS under license with ISO
No reproduction or networking permitted without license from IHS Not for Resale

INTRODUCTION

The Fibre Distributed Data Interface (FDDI) is intended for use in a high-performance general purpose multi-station network and is designed for efficient operation with a peak data rate of 100 Mbit/s. It uses a Token Ring architecture with optical fibre as the primary transmission medium. FDDI provides for hundreds of stations operating over an extent of tens of kilometers.

The FDDI Part: Token ring low-cost physical layer medium dependent (LCF-PMD) standard specifies the lower sublayer of the Physical Layer for FDDI. As such it specifies the power levels and characteristics of the optical transmitter and receiver, and the interface optical signal requirements including jitter. LCF-PMD also specifies the connector receptacle footprint, the requirements of conforming FDDI optical fibre cablings, and the permissible bit error rates.

LCF-PMD is one of a set of alternative international standard PMDs for FDDI. This set includes the original PMD, the Single Mode Fibre PMD (SMF-PMD), and the Twisted-Pair PMD (TP-PMD).

The set of FDDI standards includes the following standards:

a) a FDDI Part: token ring physical layer protocol (PHY), which specifies the upper sublayer of the physical layer for the FDDI, including the data encode/decode, framing and clocking, as well as the elasticity buffer, smoothing, and repeat filter functions;

b) a FDDI Part: token ring media access control (MAC), which specifies the lower sublayer of the data link layer for FDDI, including the access to the medium, addressing, data checking, and data framing;

c) a FDDI Part: token ring station management (SMT), which specifies the local portion of the system management application process for FDDI, including the control required for proper operation of a station in an FDDI ring.

Copyright International Organization for Standardization
Reproduced by IHS under license with ISO
No reproduction or networking permitted without license from IHS Not for Resale

INFORMATION TECHNOLOGY – FIBRE DISTRIBUTED DATA INTERFACE (FDDI) –

Part 9: Low-cost fibre physical layer medium dependent (LCF-PMD)

1 Scope

This part of ISO/IEC 9314 specifies the requirements for the Fibre Distributed Data Interface (FDDI); token ring low-cost fibre physical layer medium dependent (LCF-PMD).

FDDI provides a high-bandwidth (100 Mbit/s), general-purpose interconnection among computers and peripheral equipment using fibre optics as the primary transmission medium. FDDI can be configured to support a sustained data transfer rate of at least 80 Mbit/s (10 Mbyte/s). FDDI provides connectivity for many nodes distributed over distances of several kilometers in extent. Default values for FDDI are calculated on the basis of 1 000 physical links and a total fibre path length of 200 km (typically corresponding to 500 nodes and 100 km of dual fibre cable).

FDDI consists of:

a) a Physical Layer (PL), which is divided into two sublayers

   1) A Physical Layer, Medium Dependent (PMD) sublayer (ISO/IEC 9314-3), with several alternative medium choices, which provides the digital baseband point-to-point communication between nodes in the FDDI network. The PMD provides all services necessary to transport a suitably coded digital bit stream from node to node. The PMD defines and characterizes the medium drivers and receivers, medium-dependent code requirements, cables, connectors, power budgets, optical bypass provisions, and physical-hardware-related characteristics. It specifies the point of interconnectability for conforming FDDI attachments.

      The original PMD standard (ISO/IEC 9314-3), called PMD, defines attachment to multi-mode fibre up to 2 km, while this LCF-PMD, optically interoperable with the original PMD, defines low-cost attachments to multi-mode fibre up to 500 m. Additional PMD sublayer standards are for attachment to single mode fibre (SMF-PMD), and twisted-pair up to 100 m (TP-PMD);

   2) A Physical Layer Protocol (PHY) sublayer (ISO/IEC 9314-1), and its enhancement, (PHY-2), which provides connection between the PMD and the Data Link Layer. PHY establishes clock synchronization with the upstream code-bit data stream and decodes this incoming code-bit stream into an equivalent symbol stream for use by the higher layers. PHY provides encoding and decoding between data and control indicator symbols and code bits, medium conditioning and initializing, the synchronization of incoming and outgoing code-bit clocks, and the delineation of octet boundaries as required for the transmission of information to or from higher layers. Information to be transmitted on the medium is encoded by the PHY using a group transmission code;

b) a Data Link Layer (DLL), which is divided into two or more sublayers

   1) An optional Hybrid Ring Control (HRC) (ISO/IEC 9314-5), which provides multiplexing of packet and circuit switched data on the shared FDDI medium. HRC comprises two internal components, a Hybrid Multiplexer (H-MUX) and an Isochronous MAC (I-MAC). H-MUX maintains a synchronous 125 µs cycle structure and multiplexes the packet and circuit switched data streams, and I-MAC provides access to circuit switched channels;

   2) A Media Access Control (MAC) (ISO/IEC 9314-2), and its enhancement (MAC-2), which provides fair and deterministic access to the medium, address recognition, and generation and verification of frame check sequences. Its primary function is the delivery of packet data, including frame generation, repetition, and removal;

Copyright International Organization for Standardization
Reproduced by IHS under license with ISO
No reproduction or networking permitted without license from IHS Not for Resale

3) An optional Logical Link Control (LLC), which provides a common protocol for any required packet data adaptation services between MAC and the Network Layer. LLC is not specified by FDDI;

4) An optional Circuit Switching Multiplexer (CS-MUX), which provides a common protocol for any required circuit data adaptation services between I-MAC and the Network Layer. CS-MUX is not specified by FDDI;

c) a Station Management (SMT), which provides the control necessary at the node level to manage the processes under way in the various FDDI layers such that a node may work cooperatively on a ring. SMT provides services such as control of configuration management, fault isolation and recovery, and scheduling policies.

FDDI LCF-PMD is a supporting document to FDDI PHY and FDDI PHY-2 which should be read in conjunction with it. The FDDI SMT document should be read for information pertaining to supported FDDI node and network configurations. The original FDDI PMD should be read for issues relating to FDDI LCF-PMD to FDDI PMD optical interoperability.

ISO/IEC 9314 specifies the interfaces, functions, and operations necessary to ensure interoperability between conforming FDDI implementations. This standard provides a functional description. Conforming implementations may employ any design technique that does not violate interoperability.

2 Normative references

The following normative documents contain provisions which, through reference in this text, constitute provisions of this part of ISO/IEC 9314. For dated references, subsequent amendments to, or revisions of, any of these publications do not apply. However, parties to agreements based on this part of ISO/IEC 9314 are encouraged to investigate the possibility of applying the most recent editions of the normative documents indicated below. For undated references, the latest edition of the normative document referred to applies. Members of IEC and ISO maintain registers of currently valid International Standards.

IEC 60793-1-1, *Optical fibres – Part 1-1: Generic specification – General*

IEC 60793-1-2, *Optical fibres – Part 1: Generic specification – Section 2: Measuring methods for dimensions*

IEC 60793-1-4, *Optical fibres – Part 1: Generic specification – Section 4: Measuring methods for transmission and optical characteristics*

IEC 60793-2, *Optical fibres – Part 2: Product specifications*

IEC 60874-14, *Connectors for optical fibres and cables – Part 14: Sectional specification for fibre optic connector – Type SC*

IEC 60874-19, *Connectors for optical fibres and cables – Part 19: Sectional specification for fibre optic connector – Type SC-D(uplex)*

ISO/IEC 11801:1995, *Information technology – Generic cabling for customer premises*

ISO/IEC 9314-1:1989, *Information processing systems – Fibre Distributed Data Interface (FDDI) – Part 1: Token Ring Physical Layer Protocol (PHY)*

ISO/IEC 9314-2:1989, *Information processing systems – Fibre Distributed Data Interface (FDDI) – Part 2: Token Ring Media Access Control (MAC)*

ISO/IEC 9314-3:1990, *Information processing systems – Fibre Distributed Data Interface (FDDI) – Part 3: Token Ring Physical Layer, Medium Dependent (PMD)*

Copyright International Organization for Standardization
Reproduced by IHS under license with ISO
No reproduction or networking permitted without license from IHS Not for Resale

3 Definitions

For the purposes of this part of ISO/IEC 9314, the following definitions apply. Other parts of ISO/IEC 9314, e.g. FDDI MAC, PHY and PMD, may contain additional definitions of interest.

3.1
attenuation
level of optical power loss, expressed in decibels

3.2
average power
the optical power measured using an average reading power meter when the FDDI station is transmitting a stream of Halt symbols

3.3
bypass
the ability of a station to isolate itself optically from the FDDI network while maintaining the continuity of the cabling

3.4
centre wavelength
the average of the two wavelengths measured at the half amplitude points of the power spectrum

3.5
code bit
the smallest signalling element used by the Physical Layer for transmission on the medium

3.6
concentrator
FDDI node that has additional PHY/PMD entities beyond those required for its own attachment to an FDDI network. These additional PHY/PMD entities are for the attachment of other FDDI nodes (including other concentrators) in a tree topology

3.7
connector plug
device used to terminate a fibre optic cable

3.8
connector receptacle
fixed or stationary half of a connection that is mounted on a panel/bulkhead. Receptacles mate with plugs

3.9
counter-rotating
arrangement whereby two signal paths, one in each direction, exist in a ring topology

3.10
dual attachment concentrator
concentrator that offers two attachments to the FDDI network which are capable of accommodating a dual (counter-rotating) ring

3.11
dual attachment station
a station that offers two attachments to the FDDI network which are capable of accommodating a dual (counter-rotating) ring

Copyright International Organization for Standardization
Reproduced by IHS under license with ISO
No reproduction or networking permitted without license from IHS Not for Resale

3.12
dual ring (FDDI dual ring)
two FDDI rings that operate as (a pair of) counter-rotating logical rings

3.13
entity
an active service or management element within an Open Systems Interconnection (OSI) layer, or sublayer

3.14
extinction ratio
the ratio of the low, or off optical power level (PL) to the high, or on optical power level (PH) when the station is transmitting a stream of Halt symbols

$$\text{Extinction ratio (\%)} = (PL/PH) \times 100$$

3.15
fibre
dielectric material that guides light; waveguide

3.16
fibre optic cable
a cable containing one or more optical fibres

3.17
interchannel isolation
the ability to prevent undesired optical energy from appearing in one signal path as a result of coupling from another signal path; cross talk

3.18
jitter
the variation in synchronization between bits in the FDDI signalling bit stream

3.19
jitter, data dependent (DDJ)
jitter that is related to the transmitted symbol sequence

NOTE DDJ is caused by the limited bandwidth characteristics and imperfections in the optical channel components. DDJ results from non-ideal individual pulse responses and from variation in the average value of the encoded pulse sequence which may cause base-line wander and may change the sampling threshold level in the receiver.

3.20
jitter, duty cycle distortion (DCD)
distortion usually caused by propagation delay differences between low-to-high and high-to-low transitions

NOTE DCD is manifested as a pulse width distortion of the nominal baud time.

3.21
jitter, random (RJ)
RJ is caused by thermal noise

NOTE Random jitter may be modeled as a Gaussian process. The peak-to-peak value of RJ is of a probabilistic nature and thus any specific value requires an associated probability.

3.22
LCF-MIC plug
male part of the LCF-MIC which terminates a fibre optical cable

Copyright International Organization for Standardization
Reproduced by IHS under license with ISO
No reproduction or networking permitted without license from IHS Not for Resale

3.23
LCF-MIC receptacle
female part of the LCF-MIC which is contained in an FDDI node

3.24
logical ring
set of MACs serially connected to form a single ring

3.25
media interface connector (MIC)
a mated connector pair that provides an attachment between an FDDI node and a fibre optic cabling

NOTE When referring to the original PMD's MIC, the term MIC is used. When referring to the LCF-PMD MIC, the term LCF-MIC is used. The LCF-MIC consists of two parts; an LCF-MIC plug and an LCF-MIC receptacle.

3.26
network (FDDI network)
a collection of FDDI nodes interconnected to form a trunk, or a tree, or a trunk with multiple trees. This topology is sometimes called a dual ring of trees

3.27
node
a generic term applying to any FDDI ring attachment (station or concentrator)

3.28
numerical aperture (NA)
the sine of the radiation or acceptance half angle of an optical fibre, multiplied by the refractive index of the material in contact with the exit or entrance face

3.29
optical fall time
the time interval for the falling edge of an optical pulse to transition from 90 % to 10 % of the pulse amplitude

3.30
optical reference plane
plane that defines the optical boundary between the MIC Plug and the MIC Receptacle

3.31
optical rise time
time interval for the rising edge of an optical pulse to transition from 10 % to 90 % of the pulse amplitude

3.32
original PMD
the PMD defined in ISO/IEC 9314-3

NOTE The original PMD supports multi-mode fibre optic cable with an 11 dB loss budget.

3.33
physical connection
the full-duplex physical layer association between adjacent PHY entities (in concentrators or stations) in an FDDI network, i.e. a pair of Physical Links

3.34
physical link
the simplex path (via PMD and attached medium) from the transmit function of one PHY entity to the receive function of an adjacent PHY entity (in concentrators or stations) in an FDDI network

--`,,`,,`-`-`,,`,,`,`,,`---

Copyright International Organization for Standardization
Reproduced by IHS under license with ISO
No reproduction or networking permitted without license from IHS Not for Resale

3.35
primitive
an element of the services provided by one entity to another

3.36
receiver (optical)
opto-electronic circuit that typically converts an optical signal to an electrical logic signal

3.37
ring
a set of stations wherein information is passed sequentially between stations, each station in turn examining or copying the information, finally returning it to the originating station

3.38
services
FDDI services provided by one FDDI entity to another

NOTE Data services are provided to a higher layer entity; management services are provided to a management entity in the same or another layer.

3.39
single attachment concentrator
concentrator that offers one attachment to the FDDI network

3.40
single attachment station
a station that offers one attachment to the FDDI network

3.41
spectral width, full width half maximum (FWHM)
the absolute difference between the wavelengths at which the spectral radiant intensity is 50,0 % of the maximum power

3.42
station
an addressable node on an FDDI network capable of transmitting, repeating, and receiving information. A station has exactly one SMT and at least one MAC, one PHY, and one PMD

3.43
transmitter (optical)
an opto-electronic circuit that typically converts an electrical logic signal to an optical signal

3.44
trunk
a physical loop topology, either open or closed, employing two optical fibre signal paths, one in each direction (i.e. counter-rotating), forming a sequence of peer connections between FDDI nodes

NOTE When the trunk forms a closed loop it is sometimes called a trunk ring.

3.45
tree
a physical topology consisting of a hierarchy of master-slave connections between a concentrator and other FDDI nodes (including subordinate concentrators)

--`,,`,,`-`-`,,`,,`,`,,`---

Copyright International Organization for Standardization
Reproduced by IHS under license with ISO
No reproduction or networking permitted without license from IHS Not for Resale

4 Conventions and abbreviations

4.1 Conventions

The terms SMT, MAC, PHY, and PMD, when used without modifiers, refer specifically to the local instances of these entities.

Low lines (e.g. control_action) are used as a convenience to mark the name of signals, functions, and the like, which might otherwise be misinterpreted as independent individual words if they were to appear in text.

The use of a period (e.g. PM_UNITDATA.request) is equivalent to the use of low lines except that a period is used as an aid to distinguish modifier words appended to an antecedent expression.

The use of a colon (e.g. N:PM_UNITDATA.request) distinguishes between two or more instances of the same signal where N designates the other source/destination entity.

4.2 Abbreviations

AII	Active Input Interface
AOI	Active Output Interface
ANS_Max	Maximum acquisition time (no signal)
AS_Max	Maximum acquisition time (signal)
BER	Bit Error Rate
BERT	Bit Error Rate Tester
d.c.	direct current
DCD	Duty Cycle Distortion (jitter)
DDJ	Data Dependent Jitter
ECL	Emitter Coupled Logic
FOTP	Fibre Optic Test Procedure
FWHM	Full Width Half Maximum
LED	Light Emitting Diode
LCF-MIC	LCF-PMD MIC Connector
LS_Max	Maximum line state change time
MIC	Media Interface Connector
NA	Numerical Aperture
NRZI	Non Return to Zero, Invert on ones
RJ	Random Jitter
SAE	Static Alignment Error (clock offset error)

5 General description

5.1 Ring Overview

A ring consists of a set of stations logically connected as a serial string of stations and transmission media to form a closed loop. Information is transmitted sequentially, as a stream of suitably encoded symbols, from one station to the next. Each station generally regenerates and repeats each symbol and serves as the means for attaching one or more devices to the ring for the purpose of communicating with other devices on the ring. The method of actual physical attachment to the FDDI ring may vary and is dependent on specific application requirements as described in subsequent paragraphs.

Copyright International Organization for Standardization
Reproduced by IHS under license with ISO
No reproduction or networking permitted without license from IHS Not for Resale

The basic building block of an FDDI ring is a physical connection as shown in Figure 1. A physical connection consists of the Physical Layers (each composed of a PMD and a PHY entity) of two stations that are connected over the transmission medium by a Primary Link and a Secondary Link. A Primary Link consists of an output, called Primary Out, of a Physical Layer, communicating over a Primary medium to the input, called Primary In, of a second Physical Layer. The Secondary Link consists of the output, called Secondary Out, of the second Physical Layer communicating over a Secondary medium to the input, called Secondary In, of the first Physical Layer. Physical connections may be subsequently logically connected within stations, via attached MACs or other means, to create the network. As such, the function of each station is implementer-defined and is determined by the specific application or site requirements.

Two classes of stations are defined: dual (attachment) and single (attachment). FDDI trunk rings may be composed only of dual attachment stations which have two PMD entities (and associated PHY entities) to accommodate the dual ring. Concentrators provide additional PMD entities beyond those required for their own attachment to the FDDI network, for the attachment of single attachment stations which have only one PMD and thus should not directly attach to the FDDI trunk ring.

The example of Figure 2 shows the concept of multiple physical connections used to create logical rings. As shown, the logical sequence of MAC connections is stations 1, 3, 5, 8, 9, 10, and 11. Stations 2, 3, 4, and 6 form an FDDI trunk ring. Stations 1, 5, 7, 10, and 11 are attached to this ring by lobes branching out from the stations that form it. Stations 8 and 9 are in turn attached by lobes branching out from station 7. Stations 2, 4, 6, and 7 are concentrators, serving as the means for attaching multiple stations to the FDDI ring. Concentrators may or may not have MAC entities and station functionality. The concentrator examples of Figure 2 do not show any MACs although their presence is implied by the designation of these concentrators as stations.

Connection to the physical medium as established by PMD is controlled by the station insertion and removal algorithms of Station Management (SMT) which are beyond the scope of this standard.

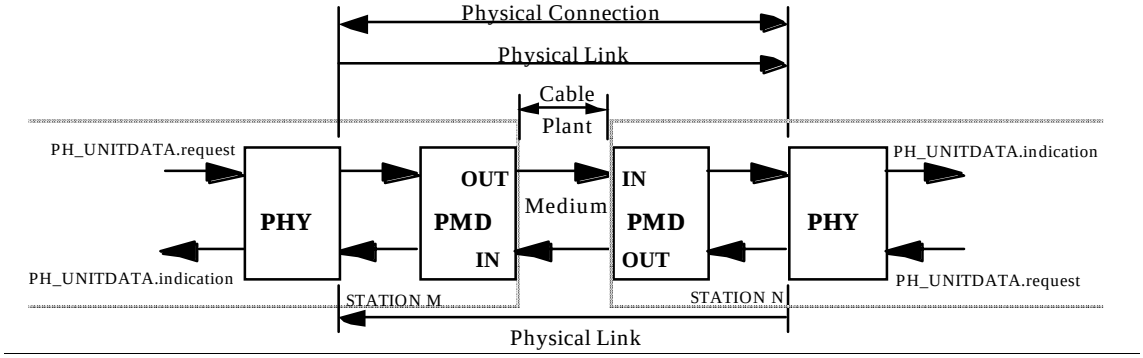

Figure 1 — FDDI links and connections

5.2 Environment

5.2.1 General

As shown in Figure 2 and as described in 5.1, an FDDI network consists of a virtually unlimited number of connected stations. SMT establishes the physical connections between stations, and the correct internal station configurations, to create an FDDI network. It is understood that restrictions of the transmission media as defined (i.e. dynamic range and bandwidth) may place limits on realizable physical configurations. Tradeoffs may be made within specific site applications, such as distance versus optical bypassing, consistent with these limitations.

Copyright International Organization for Standardization
Reproduced by IHS under license with ISO
No reproduction or networking permitted without license from IHS Not for Resale

While not intended to be limiting, FDDI has been defined to provide for a multi-level private network serving a campus or multi-building environment described in ISO/IEC 11801. According to figure 1 of ISO/IEC 11801 a generic cabling system consists of the following subsystems: the campus backbone cabling subsystem, the building backbone cabling subsystem, and the horizontal cabling subsystem. These subsystems describe an inter-building distribution environment, an intra-building distribution environment, and a work station distribution environment. The following subclauses discuss the requirements to be considered when implementing FDDI networks.

5.2.2 Campus inter-building distribution environment

The campus environment is characterized by stations distributed across multiple buildings, utilizing underground fibre cable distribution plant, where the distances might be as short as several hundred metres and as long as tens of kilometres. At the shortest distances, the FDDI LCF-PMD (Low-Cost Fibre) interface defined by this standard might possibly be used, but it would generally be expected that the original PMD interface ISO/IEC 9314-3 would be used for inter-building distances up to 2 km.

At the longer distances, a campus environment might use private fibre, and thus rely on the FDDI SMF-PMD (Single-Mode Fibre) defined in ISO/IEC 9314-4, while connections that required public links could rely on an FDDI SONET physical mapping interface.

This environment would typically be expected to be implemented as a dual-trunk ring, though centralized concentrators with radial distribution to remote sites (buildings) can be used (see ISO/IEC 11801). Optical bypass is also a candidate for this environment as transmission link reliability considerations are paramount when underground fibre cabling is utilized due to the great difficulty in restoring services if the link is physically damaged or lost.

5.2.3 Intra-building distribution environment

The intra-building environment is characterized by stations located throughout a building, utilizing standard intra-building cable distribution models, where the distances typically range from a few meters to a thousand metres. For more details on generic cabling within customer premises, refer to ISO/IEC 11801.

At the very shortest distances, the FDDI TP-PMD (Twisted-Pair) interface might be used but it would generally be expected that the FDDI LCF-PMD (Low-Cost Fibre) interface would be used for distances up to 500 m and the original FDDI PMD interface for intra-building distances above LCF-PMD limits.

This environment would typically consist of interconnections between concentrators located in telecommunications closets and facilities such as floor distributors. However, it would also be expected that some data centre to data centre interconnections would be implemented in this environment as well using dual attachment stations. Concentrators would be interconnected by either single or dual attachment. Optical bypass is also a candidate for this environment, but less likely given the protection provided by both dual rings and concentrators.

5.2.4 Workstation distribution environment

The workstation environment is characterized by stations located within a short distance of a floor distributor. It would typically utilize standard intra-building cable distribution models, where distances are typically less than 100 m, and distances between distribution closets are typically less than 500 m. For distribution from the workstation to the closest distribution closet, the FDDI TP-PMD and LCF-PMD interfaces would typically be used. For distribution where the workstation is more than one distribution closet away from the concentrator, the FDDI LCF-PMD interface would typically be used, with the original FDDI PMD only being used for distances above 500 m.

The environment would typically consist of single attachment interconnections from workstations in the office or laboratory, to concentrators located in floor distributors.

Copyright International Organization for Standardization
Reproduced by IHS under license with ISO
No reproduction or networking permitted without license from IHS Not for Resale

Occasionally, dual attachment stations might be served, but it is expected that the link distances as described above would still apply. Optical bypass is also a candidate for this environment, but less likely given the protection provided by both dual rings and concentrators.

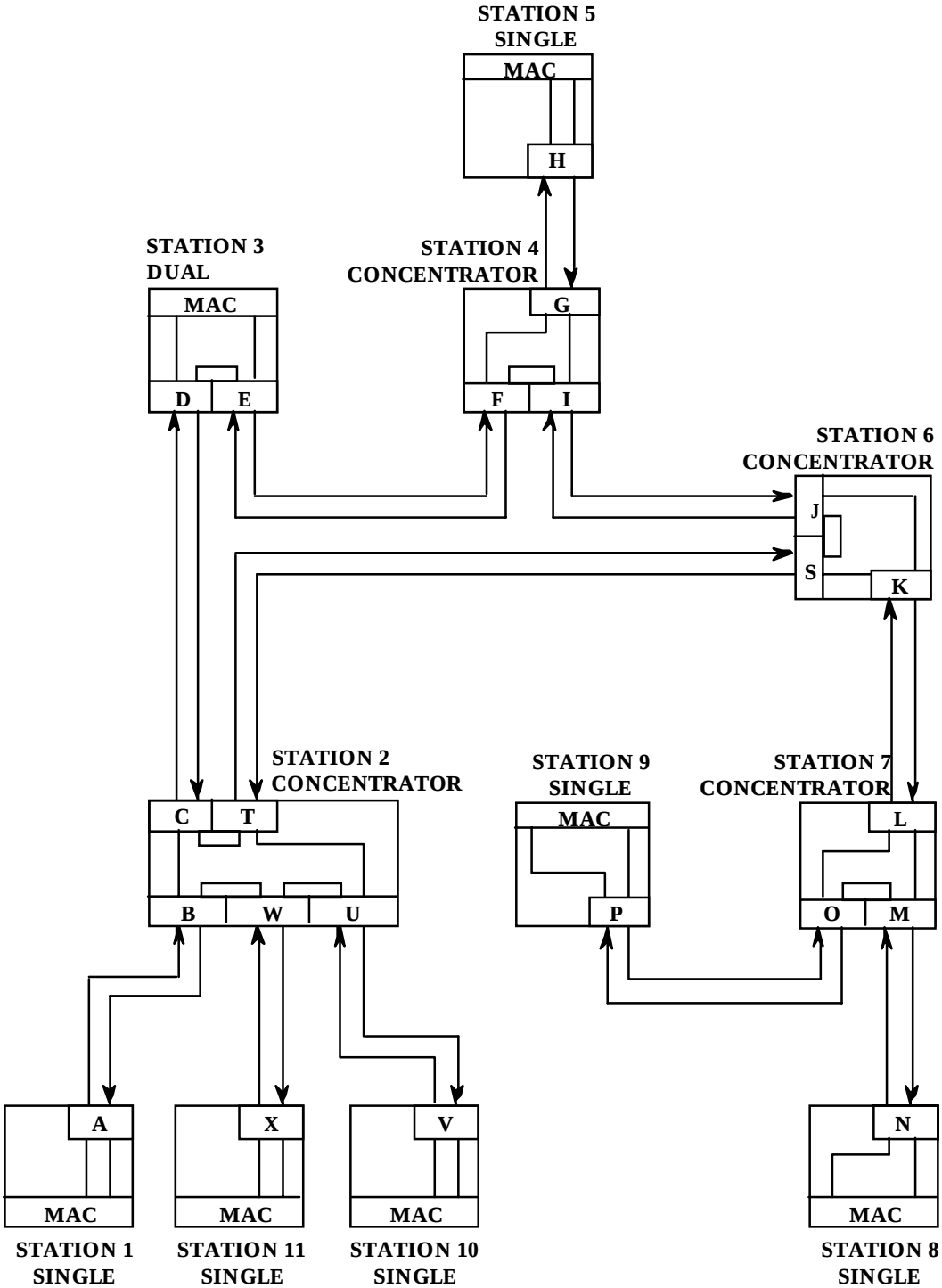

Figure 2 — FDDI topology example

Copyright International Organization for Standardization
Reproduced by IHS under license with ISO
No reproduction or networking permitted without license from IHS
Not for Resale

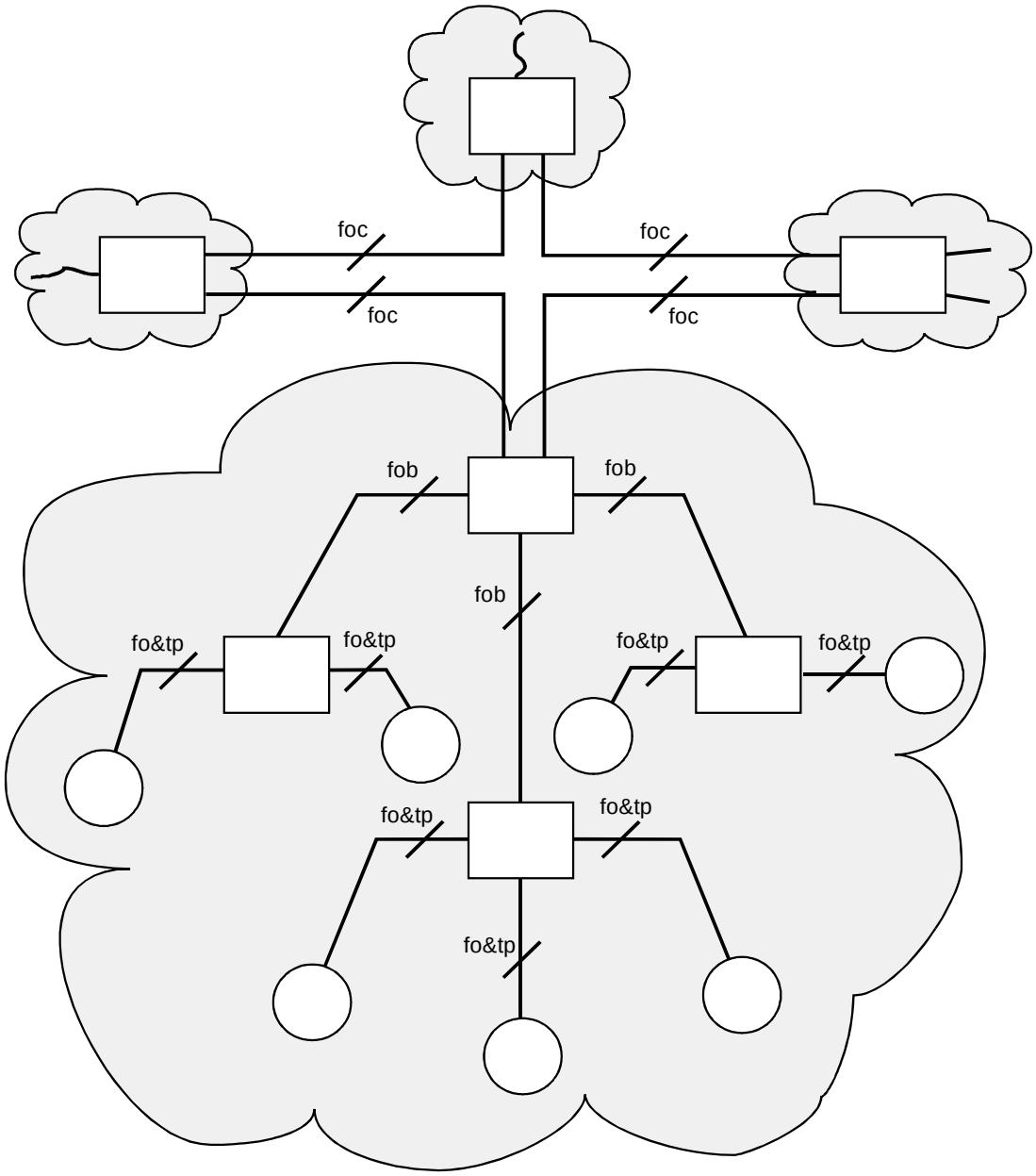

Figure 3 — FDDI representative distribution environment example

Copyright International Organization for Standardization
Reproduced by IHS under license with ISO
No reproduction or networking permitted without license from IHS
Not for Resale

6 Services

6.1 General

This clause specifies the services provided by the LCF-PMD. These services do not imply any particular implementation or any interface.

NOTE These services for LCF-PMD are identical to those defined in the PMD; they are included here for completeness, and changes are purely editorial.

Services described are:

(a) LCF-PMD services provided to the local Physical Protocol (PHY) entity (indicated by PM_ prefix);

(b) LCF-PMD services provided to the local Station Management (SMT) entity (indicated by SM_PM_ prefix).

An optional qualifier is sometimes needed to identify a signal unambiguously where there are multiple instances of the same signal within a service interface (indicated by the “(N:)” prefix). Thus, a prefix of (N:)PM_ or (N:)SM_PM_ indicates that an LCF-PMD could duplicate a signal a number of times and identify each signal with a unique qualifier. For example, an LCF-PMD in a dual station would use A:PM_ and B:PM_ as prefixes when required, whereas an LCF-PMD in a single station may only use PM_ as a prefix. Concentrators may use other qualifiers, such as M1:PM_ through Mn:PM_, to uniquely identify a signal.

Figure 4 shows the block diagram organization of the FDDI Low-Cost Fibre Physical Medium Dependent (LCF-PMD) including the separate functions, intended to show physical implementation or physical orientation of the components within an FDDI station. As described, the interfaces and signals between PMD, PHY, and SMT are examples and are intended to be logical rather than physical. Any other set of signals that causes the same physical behavior is equally valid.

6.2 LCF-PMD–to–PHY services

6.2.1 Introduction

This subclause specifies the services provided at the interface between the LCF-PMD and the PHY entities of the Physical Layer, to allow PHY to exchange an NRZI code-bit stream with peer PHY entities. The LCF-PMD parameters have been selected to be compatible with the encoding and decoding techniques provided by the FDDI PHY. LCF-PMD translates the encoded electrical data signals to and from optical signals suitable for the fibre medium but does not perform any further encoding or decoding. Additional detail is provided in clauses 8 and 9 concerning conditions that generate these primitives and LCF-PMD actions upon receipt of PHY-generated primitives.

The following primitives are defined:

PM_UNITDATA.request

PM_UNITDATA.indication

PM_SIGNAL.indication

Each primitive includes the information that is passed between the LCF-PMD and PHY entities.

6.2.2 PM_UNITDATA.request

This primitive defines the transfer of encoded NRZI data from PHY to LCF-PMD.

--`,,`-`-`,,`,,`,`,,`---
Copyright International Organization for Standardization
Reproduced by IHS under license with ISO
No reproduction or networking permitted without license from IHS Not for Resale

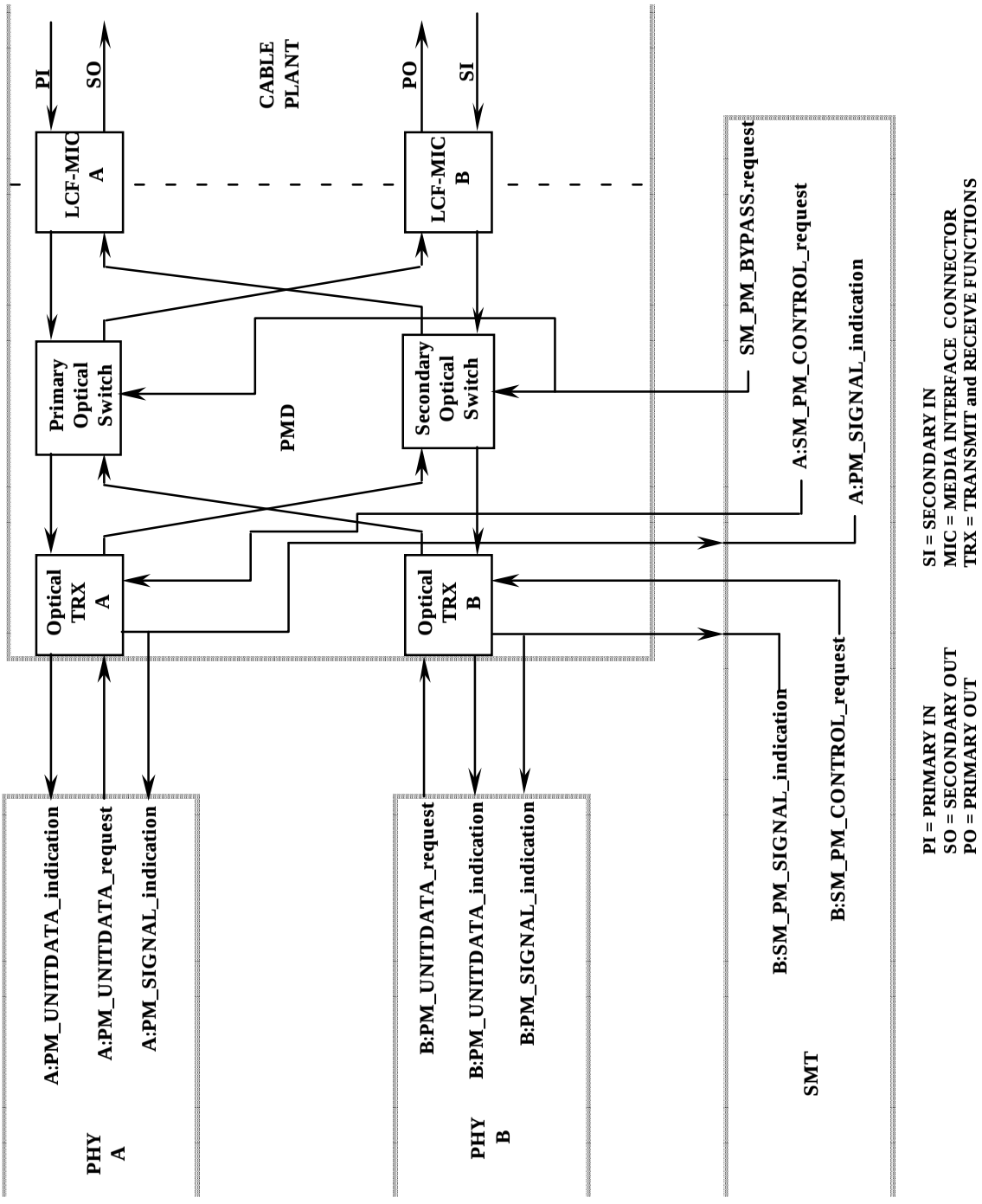

Figure 4 — Dual attachment LCF-PMD services

Copyright International Organization for Standardization
Reproduced by IHS under license with ISO
No reproduction or networking permitted without license from IHS
Not for Resale

6.2.2.1 Semantics of the primitive

(N:)PM_UNITDATA.request (
PM_Request (NRZI code)
)

The data conveyed by PM_Request shall be a continuous code-bit sequence.

6.2.2.2 When generated

PHY continuously sends the LCF-PMD layer the current NRZI code polarity.

6.2.2.3 Effect of receipt

Upon receipt of this primitive and of SM_PM_CONTROL.request with a Control_Action parameter of Transmit_Enable, LCF-PMD shall convert an electrical NRZI encoded code-bit sequence into the optical domain of the interface medium. While the code bits are represented by transitions of signal state, LCF-PMD shall respond to the logic level of PM_UNITDATA.request. LCF-PMD shall transmit a low light power level upon receipt of a logic "0" and a high light power level upon receipt of a logic "1".

6.2.3 PM_UNITDATA.indication

This primitive defines the transfer of encoded NRZI data from PMD to PHY.

6.2.3.1 Semantics of the primitive

(N:)PM_UNITDATA.indication (
PM_Indication (NRZI code)
)

The data conveyed by PM_Indication shall be a continuous code-bit sequence.

6.2.3.2 When generated

LCF-PMD shall continuously send the current encoded NRZI code to PHY.

6.2.3.3 Effect of receipt

In normal non-Loopback mode, PM_Indication is continuously sampled by the clock recovery and decode functions of the PHY entity.

6.2.4 PM_SIGNAL.indication

This primitive is generated by LCF-PMD and asserted to PHY to indicate the status of the optical signal being received by LCF-PMD.

Copyright International Organization for Standardization
Reproduced by IHS under license with ISO
No reproduction or networking permitted without license from IHS Not for Resale

6.2.4.1 Semantics of the primitive

(N:)PM_SIGNAL.indication (
Signal_Detect(status)
)

The Signal_Detect(status) parameter shall indicate whether the quality and optical power level of the inbound optical signal is satisfactory (status = on) or unsatisfactory (status = off). When status = off, then PM_UNITDATA.indication is undefined but actions based on PM_SIGNAL.indication shall be interpreted as if PM_UNITDATA.indication is a continuous logic "0" code-bit sequence.

6.2.4.2 When generated

LCF-PMD shall generate this primitive to indicate the status of the Signal_Detect.

6.2.4.3 Effect of receipt

The effect of PHY on receipt of this primitive is, when status = off, to enter Quiet_Line-State, and when status = on, to enable detection of other line states.

6.3 LCF-PMD-to-SMT services

6.3.1 Introduction

The services supplied by LCF-PMD allow SMT to control the operation of LCF-PMD. The LCF-PMD shall perform the requested SMT services preemptively over any requested PHY services. Additional detail is provided in clauses 8 and 9 concerning conditions that generate these primitives and LCF-PMD actions upon receipt of SMT-generated primitives. The following primitives are defined:

SM_PM_CONTROL.request

SM_PM_BYPASS.request

SM_PM_SIGNAL.indication

Each primitive includes the information that is passed between the LCF-PMD and SMT entities.

6.3.2 SM_PM_CONTROL.request

This primitive is generated by SMT and asserted to LCF-PMD to force the transmit function to place a logic "0" optical signal on the outbound medium.

6.3.2.1 Semantics of the primitive

(N:)SM_PM_CONTROL.request (
Control_Action
)

The Control_Action parameter shall include the following: Transmit_Enable and Transmit_Disable.

6.3.2.2 When generated

SMT generates this primitive whenever it wants to enable or disable the LCF-PMD optical transmitter.

Copyright International Organization for Standardization
Reproduced by IHS under license with ISO
No reproduction or networking permitted without license from IHS Not for Resale

6.3.2.3 Effect of receipt

Receipt of this primitive by LCF-PMD with a Control_Action parameter of Transmit_Disable shall cause LCF-PMD to transmit a logic "0" optical signal (i.e. low light) preemptively over the PM_UNITDATA.request primitive as described in 9.3. Receipt of this primitive by LCF-PMD with a Control_Action parameter of Transmit_Enable shall cause the LCF-PMD to transmit the optical signal requested by the PM_UNITDATA.request primitive. Receipt of this primitive shall not affect PM_SIGNAL.indication or PM_UNITDATA.indication.

6.3.3 SM_PM_BYPASS.request

This primitive is generated by SMT and asserted to PMD to indicate that SMT wants to join or leave the FDDI ring.

6.3.3.1 Semantics of the primitive

```
SM_PM_BYPASS.request    (
                        Control_Action
                        )
```

The Control_Action parameter shall include the following: Insert, Deinsert.

6.3.3.2 When generated

SMT generates this primitive whenever it wants to activate or deactivate the optical bypass switches.

6.3.3.3 Effect of receipt

Upon receipt of this primitive with a Control_Action parameter of Insert, LCF-PMD shall activate the optical switch such that the LCF-MIC inbound optical signal from the cabling is directed to the optical receiver (see Figure 4). The output of the optical transmitter shall be directed to the LCF-MIC output to the cabling. Upon receipt of this primitive with a Control_Action parameter of Deinsert, LCF-PMD shall deactivate the optical switch such that the LCF-MIC inbound optical signal from the cabling is directed through the switch to the LCF-MIC output to the cabling. The output of the optical transmitter shall be directed through the optical switch to the input of the optical receiver. This state is called the bypassed mode.

Optical bypass switches are optional in a FDDI ring. Stations that do not employ optical switches do not require this service.

6.3.4 SM_PM_SIGNAL.indication

This primitive is generated by LCF-PMD and asserted to SMT to indicate the status of the optical signal level being received by LCF-PMD.

6.3.4.1 Semantics of the primitive

```
(N:)SM_PM_SIGNAL.indication    (
                               Signal_Detect(status)
                               )
```

The Signal_Detect(status) parameter shall indicate whether the quality and optical power level of the inbound optical signal level is satisfactory (status = on) or unsatisfactory (status = off). When status = off, then SM_PM_UNITDATA.indication is undefined but actions based on SM_PM_SIGNAL.indication shall be interpreted as if PM_UNITDATA.indication is a continuous logic "0" code-bit sequence.

--`,,`,,`-`-`,,`,,`,`,,`---

Copyright International Organization for Standardization
Reproduced by IHS under license with ISO
No reproduction or networking permitted without license from IHS Not for Resale

6.3.4.2 When generated

LCF-PMD shall generate this primitive to indicate the status of the Signal_Detect.

6.3.4.3 Effect of receipt

The effect of receipt of this primitive on SMT is not defined.

7 Media interface connector specification

7.1 Introduction

An FDDI station implementing the LCF-PMD standard shall be attached to the fibre optic medium by a Low-Cost Fibre Media Interface Connector (LCF-MIC). The media connection between adjacent stations consists of a duplex fibre optic cable assembly attached to the respective station's Media Interface Connector (LCF-MIC). To ensure interconnectability between conforming FDDI stations, an LCF-PMD mating interface is specified at the LCF-MIC receptacle. However, a specific fibre optic cable assembly is not defined.

The primary function of the Low-Cost Fibre Media Interface Connector (LCF-MIC) is to align the optical transmission fibre mechanically to an optical port on a component such as a receiver or a transmitter.

The objective of this clause is to define the connectors and interfaces sufficiently to ensure the following:

– both mechanical and optical performance
– to allow the maximum supplier flexibility.

7.2 General information

7.2.1 Standardized connector

The optical interface connector shall conform to IEC 60874-14 (SC connector) and IEC 60874-19 (SC Duplex connector).

7.2.2 Testing recommendations

Supporting test information is contained in annex E. Additional test information will be found in the FDDI conformance standards.

7.2.3 Station labelling

To aid in preventing improper LCF-MIC plug attachment, the LCF-PMD station port should be marked (labelled). Recommended practices for station labelling are contained in annex G.

7.3 LCF-MIC receptacle

Refer to IEC 60874-19 for the LCF-MIC receptacle of the optical interface connector.

7.4 LCF-MIC plug

Refer to IEC 60874-19 for the LCF-MIC duplex plug. Two simplex plugs, IEC 60874-14, may be connected in a resilient manner, to allow relative movement, as a way to provide the duplex plug. However, it is recognized that a possible means of accomplishing this will include the attachment of a holding or clamping mechanism between two simplex plugs. Such arrangements will of necessity increase the physical size of the individual plugs above the attachment point and present the possibility of mechanical interference with objects in the

--`,,`,,`-`-`,,`,,`,`,,`---

Copyright International Organization for Standardization
Reproduced by IHS under license with ISO
No reproduction or networking permitted without license from IHS Not for Resale

vicinity of the receptacle. An example of such an object would be a cover panel where it is desired to keep the cutout as small as possible to minimize radiated emissions.

In order to provide for this situation the plug shall not exceed the dimensions of the simplex plug for a distance of 12,5 mm (measured from the end of the connector housing) and the interface connector plug shall fit through an opening of 23,0 mm by 9,9 mm located greater than 12,5 mm from the mechanical seating plane.

Warning: In the design of a duplex plug assembly, great care shall be taken to ensure pluggability with the receptacle. The ferrule to its grip body float shall be a minimum of 0,2 mm (0,1 mm radial) for each connector, and one connector grip body to another connector grip body float shall be a minimum of 0,9 mm (0,45 mm radial) for each connector. These floats are required for interoperability.

7.4.1 LCF-MIC ferrule

Refer to IEC 60874-14 for the LCF-MIC ferrule. The ferrule end shall seat to the optical reference plane with a static force of 6,7 N minimum to 13,1 N maximum per ferrule.

8 Media signal interface

8.1 General

This clause defines the interfaces of the optical signal at the interconnect receptacles shown in Figure 4. Each conforming FDDI attachment shall be compatible with this optical interface to allow interoperability within an FDDI environment. The parameters specified in this clause are based on a requirement that the bit error rate contributed by the repetition through an FDDI attachment shall not exceed a bit error rate of $1,0 \times 10^{-12}$ under all conditions of this clause, including the minimum Active Input Interface power level.

FDDI can operate with a variety of optical fibre sizes, i.e. 50/125 μm, 62,5/125 μm, 85/125 μm, 100/140 μm and 200/230 μm fibre. However, the active input and output specifications contained in this clause are based on the use of 62,5/125 μm fibre as defined in clause 10. For the use of other permitted fibre sizes (e.g. 50/125 μm) reference the information contained in annex B.

The LCF-PMD media signal interface shall be optically interoperable with the original PMD media signal interface, taking into account the 500 m and 7 dB loss budget limitations of the LCF-PMD.

Copyright International Organization for Standardization
Reproduced by IHS under license with ISO
No reproduction or networking permitted without license from IHS Not for Resale

8.2 Active output interface

The Active Output Interface shall exhibit the characteristics shown in Table 1.

These specifications in conjunction with the fibre's chromatic dispersion and modal bandwidth parameters given in clause 10 result in an optical rise time of less than 4,5 ns exiting a 500 m fibre cable. The Active Output Interface shall be implemented with an LED emitter (e.g. a surface emitting LED (S-LED) or edge emitting LED (E-LED). Utilizing spontaneous emission LED sources in this specification avoids the need to consider modal noise in multi-mode fiber link performance specifications.

8.3 Active input interface

The Active Input Interface shall operate when provided with a signal having the characteristics summarized in Table 2.

8.4 Station bypass interface

The bypass function is optional for any station. In the bypassed mode, the in-bound medium is connected to the out-bound medium and the output of the optical transmitter is looped back to the input to the optical receiver. When the station's power is off, then the station shall be in the bypassed mode.

It is not expected that the typical usage of LCF-PMD will incorporate a bypass function due to the reduced loss budget and typical concentrator-to-station usage expectation of the LCF-PMD. However, it is not intended to exclude the usage of a bypass function, providing the specific implementation takes into account the reduced loss budget of the LCF-PMD Active Interface specification.

As there is no intent to change or further specify the optical bypass function in this part of ISO/IEC 9314, implementors are referred to ISO/IEC 9314-3 for all relevant optical bypass specifications.

Table 1 — Characteristics of active output interface

Characteristic	Minimum	Maximum
Centre wavelength [nm]	1 270	1 380
Spectrum FWHM [nm]	N/A	250
Average power [dBm] (Note 1)	–22,0	–14,0
Rise time (10 % to 90 %) [ns]	N/A	4,0
Fall time (90 % to 10 %) [ns]	N/A	4,0
Duty cycle distortion, peak-peak [ns]	0,0	1,0
Data dependent jitter, peak-peak [ns] (Note 2)	0,0	0,6
Random jitter, peak-peak [ns] (Note 3)	0,0	0,76
Extinction ratio [%]	0,0	10,0

N/A = Not applicable

NOTE 1 The data pattern for this measurement shall be a stream of Halt (i.e. binary 00100) symbols.

NOTE 2 Data dependent jitter is specified for the test data pattern specified in annex A. Annex A also provides possible test methods.

NOTE 3 Random jitter is specified as the peak-peak value where the probability of exceeding that value is equal to $1,0 \times 10^{-12}$. For a Gaussian probability distribution, the specified peak-peak value is equal to 14,0 times the r.m.s. value.

--`,,`,,`-`-`,,`,,`,`,,`---

Copyright International Organization for Standardization
Reproduced by IHS under license with ISO
No reproduction or networking permitted without license from IHS Not for Resale

Table 2 — Characteristics of active input interface

Characteristic	Minimum	Maximum
Centre wavelength [nm]	1 270	1 380
Average power [dBm] (Note 1)	–29,0	–14,0
Rise time (10 % to 90 %) [ns]	N/A	4,5
Fall time (90 % to 10 %) [ns]	N/A	4,5
Duty cycle distortion, peak-peak [ns]	0,0	1,0
Data dependent jitter, peak-peak [ns] (Note 2)	0,0	0,6
Random jitter, peak-peak [ns] (Note 3)	0,0	0,76
Extinction ratio [%]	0,0	10,0

N/A = Not applicable.

NOTE 1 The data pattern for this measurement shall be a stream of Halt (i.e. binary 00100) symbols.

NOTE 2 Data dependent jitter is specified for the test data pattern specified in annex A. Annex A also provides possible test methods.

NOTE 3 Random jitter is specified as the peak-peak value where the probability of exceeding that value is equal to $1,0 \times 10^{-12}$. For a Gaussian probability distribution, the specified peak-peak value is equal to 14,0 times the r.m.s. value.

9 Interface signals

9.1 General

This clause defines the interface of the signals between LCF-PMD and SMT and also between LCF-PMD and PHY. Each conforming FDDI attachment shall be compatible with this interface to allow interoperability within an FDDI environment. Conforming implementations may employ any design technique that does not violate interoperability.

The optical power levels referenced in this clause relate to the Active Input Interface and the Active Output Interface.

9.2 Optical receiver

The optical receiver transforms the incoming optical signal to an equivalent (electrical) signal that is presented to PHY. A Signal_Detect parameter shall be presented to PHY to indicate the presence or absence of an optical signal. The data outputs of the receiver are related to the Signal_Detect parameter and are described below.

9.2.1 Signal_Detect

Signal_Detect indicates the presence of an optical signal with sufficient quality to correctly identify a Line-State. It is characterized by the threshold levels on which it changes state, by the hysteresis between these levels, and by the timing of the Signal_Detect output relative to the receiver data outputs.

9.2.1.1 Signal_Detect thresholds and hysteresis

Signal_Detect shall be asserted only for signal levels adequate for the receiver to deliver a Bit Error Rate (BER) of less than 0,01. Signal_Detect shall be asserted for any power level of –29,0 dBm or higher. The minimum allowed power level for deassertion shall be the power which gives a 0,01 BER on the receiver outputs or –45,0 dBm, whichever is greater. The minimum allowed hysteresis between the assertion and deassertion levels shall be 1,5 dB. Figure 5 illustrates these requirements.

Copyright International Organization for Standardization
Reproduced by IHS under license with ISO
No reproduction or networking permitted without license from IHS Not for Resale

9.2.1.2 Signal_Detect timing requirements on assertion

The Signal_Detect output shall be asserted within 100 µs after a step increase in the optical power. The step increase shall be a signal whose off level is –45 dBm or less and the on level shall be = (–27 ± 2) dBm. The receiver data outputs shall reflect a BER of less than 0,01 as measured in an LS_Max interval after the assertion of Signal_Detect. The data pattern of the incoming optical signal stream may be any valid symbol stream.

NOTE The value LS_Max = 15,0 µs is defined in ISO/IEC 9314-1.

AS_Max = Maximum acquisition time (signal) (i.e. the maximum Signal_Detect assertion time for the station). AS_Max shall not exceed 100,0 µs. The default value of AS_Max is 100,0 µs.

9.2.1.3 Signal_Detect timing requirements on deassertion

The Signal_Detect output shall be deasserted within a maximum of 350,0 µs after a step decrease in the optical power. The step decrease signal shall have an on level of (–27 ± 2) dBm and shall have an off level ≤ –45 dBm. This step decrease in the power level shall have occurred in less than 8 ns. The receiver outputs within 12 µs after the step decrease in the optical power should not reproduce with an accuracy greater than 90 % any spurious station signals (e.g. symbols from adjacent physical link components or power supply ripple).

Signal_Detect shall also be deasserted within a maximum of 350,0 µs after the BER of the receiver outputs degrades below 0,01 for an optical input data stream that decays with a negative ramp function with response time >8 ns.

ANS_Max = Maximum acquisition time (no signal). ANS_Max is the maximum Signal_Detect deassertion time for a station. ANS_Max shall not exceed 350,0 µs. The default value of ANS_Max is 350,0 µs.

A summary of assertion and deassertion requirements is provided in Table 3.

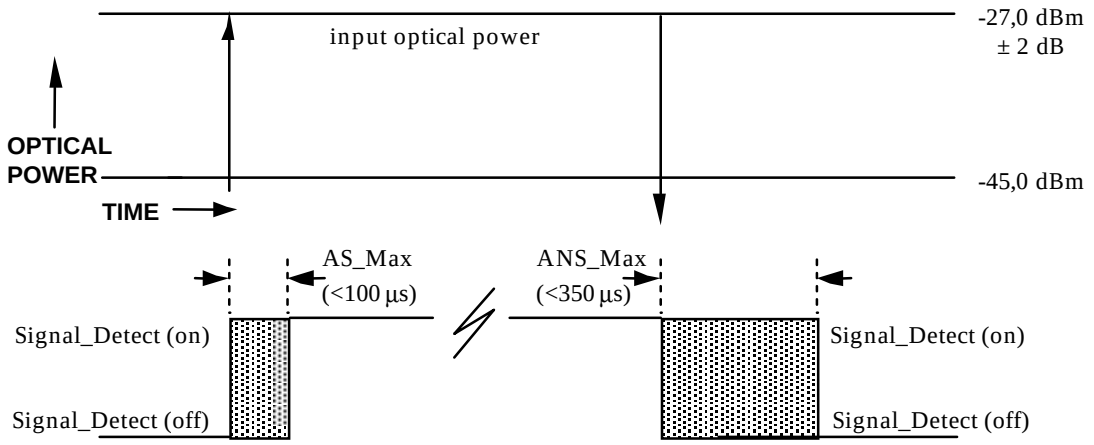

Figure 5 — Signal detect thresholds and timing

Table 3 — Summary of assertion and deassertion requirements

Requirement	Minimum	Maximum
Assert time	–	100,0 µs
Deassert time	–	350,0 µs
Assert power (Pa)	Pd + 1,5 dB	–29,0 dBm
Deassert power (Pd)	–45,0 dBm, or Pb*	–
Hysteresis	1,5 dB	–
* Whichever power is the higher, where Pb is the power level into the active input which yields a BER of 0,01 or less.		

Copyright International Organization for Standardization
Reproduced by IHS under license with ISO
No reproduction or networking permitted without license from IHS Not for Resale

9.3 Optical transmitter

LCF-PMD shall provide a service to SMT called SM_PM_CONTROL.request. When SMT passes a Control_Action parameter of Transmit_Disable, the optical output of the transmitter shall transition to the logic zero state independent of the PM_UNITDATA.request primitive and its output shall have an average optical power level of less than –45,0 dBm. When SMT passes a Control_Action parameter of Transmit_Enable, the transmitter optical output shall transmit the current PM_Request (NRZI code) value of the PM_UNITDATA.request primitive. The optical transmitter shall respond to the Control_Action parameter within 1,0 µs after receipt of the parameter.

10 Cabling interface specification

10.1 General

This clause defines the network requirements for an FDDI fibre optic cabling. The requirements specified herein apply to both dual and single attachments. Performance in accordance with this standard shall be met by following procedures as specified in ISO/IEC 11801 or other similar test procedures. The test signal may be transmitted from either end of the cabling.

ISO/IEC 11801 shall be referred to for information regarding premises cabling.

10.2 Cabling specification

The specifications in this clause are intended to assure interoperability of FDDI conforming attachments for optical cable lengths up to 500 m.

10.2.1 Fibre types

The requirements of clause 8 are specified in terms of fibre type A1b (62,5 µm/125 µm) of IEC 60793-1. The Active Interface requirements were developed assuming worst case parameters in ISO/IEC 11801 (which refers to IEC 60793-2) specification. However, other fibre sizes may also be used (see annex C).

10.2.2 Bandwidth and attenuation values

The bandwidth and attenuation values provided in Table 4 are based on a nominal source wavelength of 1 300 nm and the use of 62,5/125 µm fibre. See annex C for data to aid in calculating the maximum cabling attenuation allowed for the use of other permitted fibre sizes.

The attenuation shown in table 4 reflects the end-to-end insertion loss which includes cable attenuation and the loss of other components such as splices, connectors, switches, and the like.

Table 4 — Bandwidth and attenuation values

Value	Test method	Minimum	Maximum
Modal bandwidth (–3 dB optical) MHz×km	IEC 60793-1-C2A or IEC 60793-1-C2B or IEC 60793-1-4	500,0*	–
Attenuation dB	IEC 60793-1-C1A or IEC 60793-1-4	0,0	7,0
* Some users may wish to install higher modal bandwidth fibre to facilitate future use of the cabling for higher bandwidth applications.			

Copyright International Organization for Standardization
Reproduced by IHS under license with ISO
No reproduction or networking permitted without license from IHS Not for Resale

10.3 Bypassing

A property of the cabling is the method of bypassing chosen in the application. The loss and bandwidth limits given above apply to the plant in the worst case bypassed configuration. This may mean that part of the cabling loss is allocated to optical bypass switch loss contained in an FDDI node when several FDDI segments are concatenated.

10.4 Connectors and splices

The LCF-MIC plug for connection to an FDDI node shall be compatible with the requirements specified in clause 7. Losses of the LCF-MIC receptacles with precision mating plugs shall be included in the active output and input interface power specifications of 8.2 and 8.3 respectively. Additional losses of a non-precision plug shall be included as part of the cabling loss. Connectors and splices of any nature are allowed inside the cabling. The number and quality of connections affect the loss of the cabling and represent a design trade-off outside the scope of this standard.

--`,,`,,`-`-`,,`,,`,`,,`---
Copyright International Organization for Standardization
Reproduced by IHS under license with ISO
No reproduction or networking permitted without license from IHS
Not for Resale

Annex A
(informative)

Test methods

A.1 General

This annex defines terms, measurement techniques, and conditions for testing jitter and rise/fall time. ISO/IEC 11801 should also be referred to. This annex deals with issues specific to FDDI and is not intended to supplant standard test procedures given in this standard. This annex applies directly to verifying station performance related to the Optical Interface Specifications. These same procedures may be used to measure a single component of the system. Component performance is outside the scope of FDDI compliance but it is useful from a design viewpoint. Annex E provides exemplary information on how to interpret component measurements.

See ISO/IEC 9314-3 for more information on these measurement procedures.

A.2 Active output interface

A.2.1 Optical power measurements

The average optical power launched into the core of a 62,5 μm core graded index fibre conforming to 10.2 is specified in 8.2. See also ISO/IEC 11801. The output power should be measured using a calibrated power meter and with the station transmitting a stream of Halt symbols. This pattern corresponds to using a 12,5 MHz square wave test signal. Care should be exercised to ensure that the optical power meter is properly calibrated over the optical spectrum of the source.

Fibre lengths should be sufficient to attenuate cladding mode distribution. Fibres currently available typically require 1 m to 5 m to remove optical power from the cladding.

A.2.2 Optical spectrum measurements

The centre wavelength and spectral width (FWHM) of the Active Output Interface can be measured using an optical spectrum analyzer in accordance with method IEC 61280-1-3. The patch cable used to couple the light from the Active Output Interface to the spectrum analyzer should be short to minimize spectral filtering by the patch cable. The output signal during the measurement should be a stream of Halt symbols.

A.2.3 Rise/fall response time measurements

Active Output Interface rise/fall response times should be measured between the 10 % and 90 % optical power points using a wide bandwidth opto-electronic receiver and an oscilloscope. The output signal during the measurement should be a stream of Halt symbols. It is important that the frequency response and gain flatness of the opto-electronic measurement system be wide and flat enough to yield accurate optical rise and fall times. A minimum frequency response of 100 kHz to 750 MHz is required.

A.2.4 Jitter measurements

The Active Output Interface jitter specifications apply in the context of a $1{,}0 \times 10^{-12}$ Bit Error Rate (BER). Jitter may be measured with an oscilloscope or a Bit Error Rate Tester (BERT) as described in A.4 and A.5. The station should be transmitting the pattern given in A.6 when

Copyright International Organization for Standardization
Reproduced by IHS under license with ISO
No reproduction or networking permitted without license from IHS Not for Resale

Data Dependent Jitter (DDJ) is measured. A stream of Idle symbols should be transmitted when Random Jitter (RJ) and Duty Cycle Distortion (DCD) are measured. With the exception of DCD, jitter is difficult to measure accurately on an oscilloscope. The oscilloscope procedure is illustrative, but often underestimates the actual amount of jitter. In case of doubt, the BERT test procedure should be used to verify the limits of the jitter.

A.2.5 Extinction ratio

The Active Output Interface Extinction Ratio is a measure of the modulation depth of the optical waveform exiting the station. The output signal during the measurement should be a stream of Halt symbols.

The measurement may be made with a d.c. coupled wideband opto-electronic receiver that linearly converts optical power to voltage. The extinction ratio is the ratio of voltage, expressed in percentage, corresponding to the 0 % level (low light) to the voltage corresponding to the 100 % (high light) level and should be measured using a stream of Halt symbols. It is important that the receiver's frequency response, gain flatness and linearity over the range of optical power being measured be sufficient to provide accurate measurement of the 0 % and 100 % levels.

A.3 Active input interface

The rise/fall times, jitter, and average power ranges specified in 8.3 apply to the DDJ test pattern and define the optical test signal for the Active Input Interface. A compliant station should receive the test signal over the range of conditions specified with a frame error rate that corresponds to a BER less than or equal to $1{,}0 \times 10^{-12}$. The requirements in clause 8 were written in terms of BER to facilitate the specification of components to be used in a particular implementation.

The source of the Active Input Interface test signal should be any optical source conforming to the specifications in 8.3. It should transmit the DDJ test pattern given in A.6. ISO/IEC 9314-1 provides a description of both the coding scheme and the allowed test signal base frequency variations.

The rise/fall times and jitter of the test signal may be varied by having the source of the pattern transmit through longer than normal lengths of cable. Lower modal bandwidth cable may also be used to increase the rise/fall times and jitter. If forced to choose between the correct DDJ or rise/fall times, then an adjustment should be made to achieve the correct DDJ. The DCD of the DDJ test pattern should be adjusted electrically at the test signal source because cable length and modal bandwidth variations do not increase DCD.

The worst case DDJ test signal may require that the cable be longer than actually allowed in FDDI physical links.

The average power of the DDJ test pattern may be adjusted with a variable optical attenuator. A high power source may be needed to verify the dynamic range of the Active Input Interface.

The rise/fall times and jitter of the DDJ test signal may be measured with the methods described in A.2, A.4, and A.5. Components used in a particular implementation may also be measured with these methods.

A.4 Distortion and jitter contributions

DCD and jitter are measured as the deviation from the ideal time position of the signal at the 50 % point of the signal. The 50 % point is identified as the zero crossing of the a.c. coupled signal. The zero level is established in absence of the signal.

--`,,`,,`-`-`,,`,,`,`,,`---

Copyright International Organization for Standardization
Reproduced by IHS under license with ISO
No reproduction or networking permitted without license from IHS Not for Resale

There are three types of jitter used in the PMD specifications. The definitions are given below and the test methods are given in A.5.

(a) Duty Cycle Distortion (DCD): DCD is often caused by propagation delay differences for low-to-high and high-to-low transitions. DCD is the deviation of the measured symbol duration from the nominal 8,000 ns width. It is measured on a continuous stream of Idle symbols (i.e. a 62,5-MHz square wave).

(b) Data Dependent Jitter (DDJ): DDJ is related to the transmitted symbol sequence. It is caused by the limited bandwidth characteristics of the optical channel components. DDJ results from non-ideal individual pulse responses and variation in the average value of the encoded pulse sequence which may cause base-line wander and possible change to the sampling threshold level in the receiver. DDJ should be measured using the pattern described in A.6. DDJ is often seen in combination with other types of jitter. It is possible to measure the effects of DDJ without the effect of random jitter by working 4 dB to 6 dB above any random noise-related limit.

(c) Random Jitter (RJ): RJ is primarily due to thermal noise contributed in the optical receiver. RJ is modeled as a Gaussian process. RJ should average to zero. It should be characterized by the peak value at a $1{,}0 \times 10^{-12}$ probability. RJ should be measured using a stream of Idle symbols. In this case DCD is easily separated out and the measured jitter should only consist of RJ.

A.5 Distortion and jitter measurements

A.5.1 DCD measurements

The opto-electronic measurement system described in A.2.3 should be used to measure DCD using a stream of idle symbols (i.e. a continuous 62,5-MHz square wave). The widths of the high and low state levels of the waveform should be measured at the 50 % amplitude point.

DCD(ns) = 0,5((width of wider state) – (width of narrower state))

A.5.2 RJ and DDJ measurements

A.5.2.1 General information

There are two methods for measuring jitter: the oscilloscope method and the BERT method. The BERT method is more accurate than the oscilloscope method, but requires access to the clock signal used to create the data pattern. The BERT method may be used to test an FDDI station's Active Output Interface and to measure the jitter of the signal used to test an Active Input Interface. The BERT method may also be used to measure the jitter of components being used in a particular implementation of the Active Input and Output Interfaces.

A.5.2.2 Oscilloscope method

An eye pattern waveform is displayed on the screen of an oscilloscope. Jitter is measured as the width of the zero crossings of the eye pattern. Since jitter is measured at an associated probability, and since oscilloscopes usually do not display events having a low probability of occurrence, the oscilloscope method may not accurately measure peak-to-peak jitter at a probability of $1{,}0 \times 10^{-12}$ or less.

A.5.2.3 BERT method

The BERT jitter measurement method compares an unjittered waveform with a jittered waveform on a bit-by-bit basis and calculates the BER. The decision point for the comparison (the clock) is varied over the interval:

$$To - Tb/2 < Td < To + Tb/2$$

Copyright International Organization for Standardization
Reproduced by IHS under license with ISO
No reproduction or networking permitted without license from IHS Not for Resale

where

To is the optimal decision point (centre of eye diagram);

Tb is the bit period, 8,000 ns;

Td is the decision point.

For each position of Td, a BER measurement is taken giving the probability of jitter occurring at that Td position. In effect, the test moves along the zero crossing line of the eye pattern, measuring the probability of the occurrence of jitter at each point in the eye. The range of Td values that result in a BER less than or equal to $1{,}0 \times 10^{-12}$ gives the window (W_jf) in the eye that does not have jitter of this probability. The peak-to-peak jitter in the waveform is therefore:

$$\text{Jitter} = \text{Tb} - \text{W_jf}$$

In practice, a BER test set is used to make the bit-by-bit comparison, to increment the error count, and to calculate the measured BER. The clock, or decision point, is moved across the eye pattern. When testing for compliance to the Active Output Interface specifications, the clock may be extracted from the optical signal exiting the station. It is important that the jitter of the test receiver used to measure the Active Output jitter be low enough to measure the jitter contributed by the station. Component test beds and Active Input Interface test signal generators provide direct access to a suitable clock source to use in the BERT test method.

The BERT method may be used to measure both RJ and DDJ. DCD is usually subtracted from a measurement because it is easy to measure separately. A stream of idle symbols is used to measure RJ. The DDJ test pattern is used for DDJ measurements. DDJ and RJ may be separated as described in A.4.

A common practice used to save time is to measure the jitter at higher probabilities (e.g. $1{,}0 \times 10^{-8}$) and then extrapolate to the jitter width at a $1{,}0 \times 10^{-12}$ probability.

Copyright International Organization for Standardization
Reproduced by IHS under license with ISO
No reproduction or networking permitted without license from IHS Not for Resale

A.6 DDJ test pattern for jitter measurements

The symbol pattern provided below is used for testing FDDI components or physical links for DDJ. The symbols used in this pattern are defined in ISO/IEC 9314-1.

The pattern is 256 symbols long (1 280 bits) and is transmitted continuously during the test by repeating it. When 4B/5B NRZI encoded, this sequence causes a near worst case condition for inter-symbol interference and duty-cycle base-line wander of 50 kHz.

When the pattern is used to test Active Input and Output Interface specifications, it is suggested that an implementer replace line 1 with a copy of line 3, line 9 with a copy of line 6, line 11 with a copy of line 13, and line 16 with a copy of line 8. Multiple copies of the resulting pattern constituting a maximum length information field of a frame may then be encased in appropriate MAC headers and trailers for transmission by a station as a test frame. When the pattern is used to test the jitter introduced by a particular component, it may be used directly as follows.

I,I,I,J,K,4,D,3,1,8,B,F,8,E,3,9
5,E,6,9,C,A,0,2,4,2,4,7,0,3,B,F
1,8,1,9,3,E,5,9,6,E,C,A,D,7,0,D
7,0,7,0,7,0,2,4,2,4,2,2,4,2,7,0
I,24,7,0,2,7,4,D,3,1,8,B,F,8,E,3,9
5,E,6,9,C,A,0,2,4,2,4,7,0,3,B,F
1,8,1,9,5,E,5,9,6,E,C,E,D,7,0,D
4,D,2,2,7,4,D,3,1,8,B,F,8,E,3,9
I,25,E,6,9,C,A,T,R,S,R,S,T,0,3,B,F
1,8,1,9,6,E,5,9,6,E,C,E,3,9,5,1
I,J,K,2,7,4,D,3,1,8,B,F,8,E,3,9
5,E,6,9,C,A,0,2,4,2,4,7,0,3,B,F
I,21,8,1,9,3,E,5,9,6,E,C,A,D,7,0,D
D,0,7,D,2,7,4,D,3,1,8,B,F,8,E,3
9,5,E,6,9,C,A,0,2,4,2,4,2,4,2,7
0,3,B,F,1,8,F,9,C,E,3,A,C,E,I,I

The implementer is reminded that the Active Interface requirements apply to any valid symbol sequence, and that Active Input Interface performance is dependent on the received symbol sequence. The FDDI coding format may result in symbol sequences that have a constant 40 % or 60 % duty cycle. Repetitive transmissions of maximum length frames of a single symbol may result in base-line wander frequencies as low as 1,38 kHz. An implementer may wish to verify Active Interface conformance using a maximum length frame of repeating "7" symbols.

Copyright International Organization for Standardization
Reproduced by IHS under license with ISO
No reproduction or networking permitted without license from IHS Not for Resale

Annex B
(informative)

Alternative cabling usage

B.1 Alternative fibre sizes

Table B.1 provides a listing of other fibre types that may be used in an FDDI system. These fibre types have not been studied and details for their use are not provided for in the main body of the specification. Therefore, using these fibre types may reduce the maximum achievable 500 m distance between stations.

Table B.1 – Alternative fibre types

Nominal core diameter IEC 60793-1-A1A	Nominal cladding diameter IEC 60793-2, and IEC 60793-1-A2	Nominal numerical aperture IEC 60793-1-C6
50 µm	125 µm	0,20
50 µm	125 µm	0,21
50 µm	125 µm	0,22
85 µm	125 µm	0,26
100 µm	140 µm	0,29
200 µm SI	230 µm	0,40
200 µm	230 µm	0,40

SI = Step index

NOTE Large core fibres may launch excessive transmit power which may exceed the dynamic range of the receiver.

The body of the LCF-PMD references a single fibre type to facilitate interoperability and conformance testing; however, other fibre types may also be used. The use of an alternate fibre type with a particular implementation may have the following consequences. At the active output interface (AOI) more or less light may be launched into the fibre depending upon whether the launch optics are optimized for a core size and an NA (numerical aperture) that are smaller or larger than that of the alternate fibre size. At the active input interface (AII) the sensitivity may be increased or decreased depending on the optimization of the collecting optics.

B.2 Connection losses

B.2.1 Loss budgets

Table B.2 summarizes the potential effects of alternate fibre sizes as adjustments associated with the AOI and AII; and, provides the loss budget remaining for cabling attenuation. All adjustments are relative to an implementation using 62,5 µm core fibre which has a loss budget of 7 dB for the cabling.

The length of transmission spans, up to 500 m, for the alternate cablings are highly dependent on use of appropriate connectors and splices.

--`,,`,,`-`-`,,`,,`,`,,`---

Copyright International Organization for Standardization
Reproduced by IHS under license with ISO
No reproduction or networking permitted without license from IHS Not for Resale

Table B.2 – Summary of loss budgets remaining

Fibre type	AOI typical adjustment	AII typical adjustment	Loss budget remaining
50 µm (NA=0,20)	–5,0 dB	(0,0 to 1,0) dB	(2 to 3) dB
50 µm (NA=0,21)	–4,5 dB	(0,0 to 1,0) dB	(2,5 to 3,5) dB
50 µm (NA=0,22)	–4,0 dB	(0,0 to 1,0) dB	(3 to 4) dB
62,5 µm (NA=0,275)	0 dB	0 dB	7,0 dB
85 µm (NA=0,26)	1,0 dB	(0,0 to –2,5) dB	(5,5 to 8) dB
100 µm (NA=0,29)	2,0 dB	(0,0 to –4,0) dB	(5 to 9) dB
200 µm (NA=0,40) SI	2,0 dB	(0,0 to –8,0) dB	(1 to 9) dB
200 µm (NA=0,40)	2,0 dB	(0,0 to – 8,0) dB	(1 to 9) dB
SI = Step index			

B.2.2 Test specifications and procedure

The light source for the test should be a 1,3 µm LED, with a beam spot size of 70 µm. The photodetector for the test should be a long wavelength PIN PD, with a detection area of 100 µm.

Please note that the values in table B.2 may vary if different sources and detectors are used.

The test procedure is specified in method IEC 60793-1-C1 of IEC 60793-1-4.

B.3 Optical bypass switches

Careful consideration should be given to the input launched power mode distribution when measuring optical bypass switch loss. Studies have shown that opto-mechanical type bypass switches have a tendency to strip the higher-order power modes. Thus, if the launched input power to the cabling contained many higher-order modes, the switches succeeding the first switch might produce lower losses.

Copyright International Organization for Standardization
Reproduced by IHS under license with ISO
No reproduction or networking permitted without license from IHS Not for Resale

Annex C
(informative)

Electrical interface considerations

This annex describes the electrical interface of the optical transmitters and receivers as shown in figures C.1 and C.2. This interface is intended to separate the development of components for PHY and LCF-PMD and thus it provides an interface that may be used for the verification of the conformance of FDDI MAC and PHY entities. It is not intended to provide an interface for the interconnection of conforming FDDI attachments.

For interconnection of conforming FDDI attachments, the true requirement for interoperability is at the optical fibre interface provided by each attachment. Therefore, the requirements specified in this annex need not be met if the optical interface supplied meets the applicable requirements as specified in clause 8.

In figures C.1 and C.2, RX+ and RX– form a differential input. They connect the fibre optic receiver output to the Decode function input. The data is transferred as an NRZI pulse stream.

TX+ and TX– form a differential output. They connect the Encode function output to the fibre optic transmitter input. The data is transferred as an NRZI pulse stream.

The differential input/output signals are shown d.c. coupled in figure C.1. This d.c. coupling was assumed in the jitter allocation shown in annex D.

The differential input/output signals are shown a.c. coupled in figure C.2 as this may be useful to allow for power supply mismatches between components. An implementation using the a.c. coupled scheme may need to provide for jitter induced due to base-line wander across the capacitors.

The differential interface signals between PHY and LCF-PMD should be compatible with both the 10K and the 100K ECL logic families.

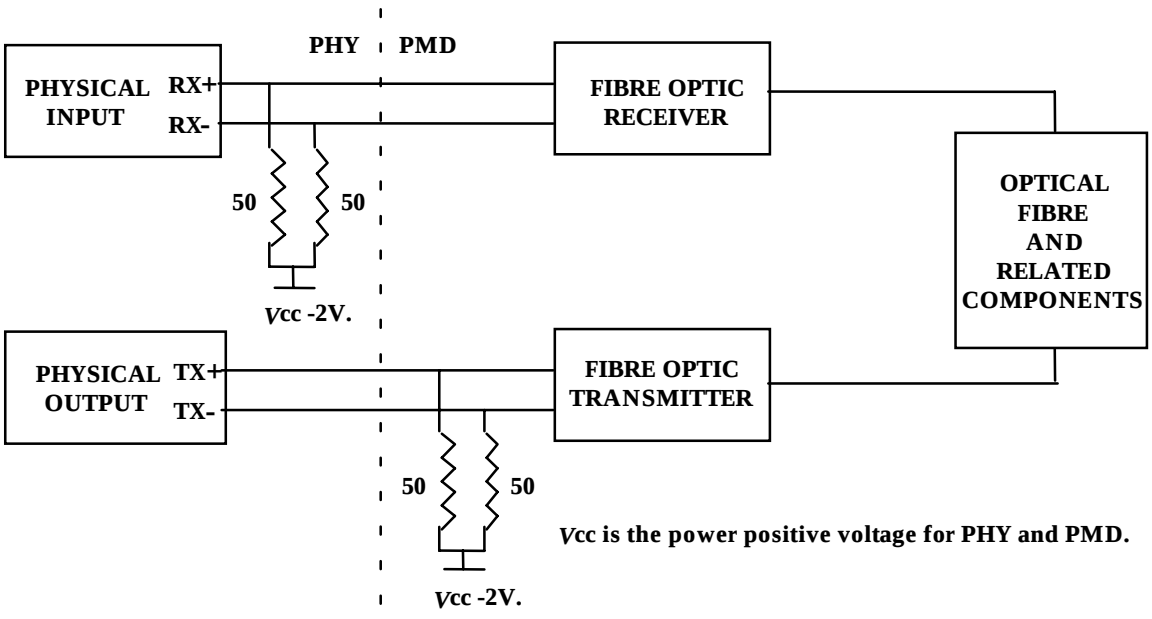

Figure C.1 – Test configuration for d.c. coupled components

Copyright International Organization for Standardization
Reproduced by IHS under license with ISO
No reproduction or networking permitted without license from IHS
Not for Resale

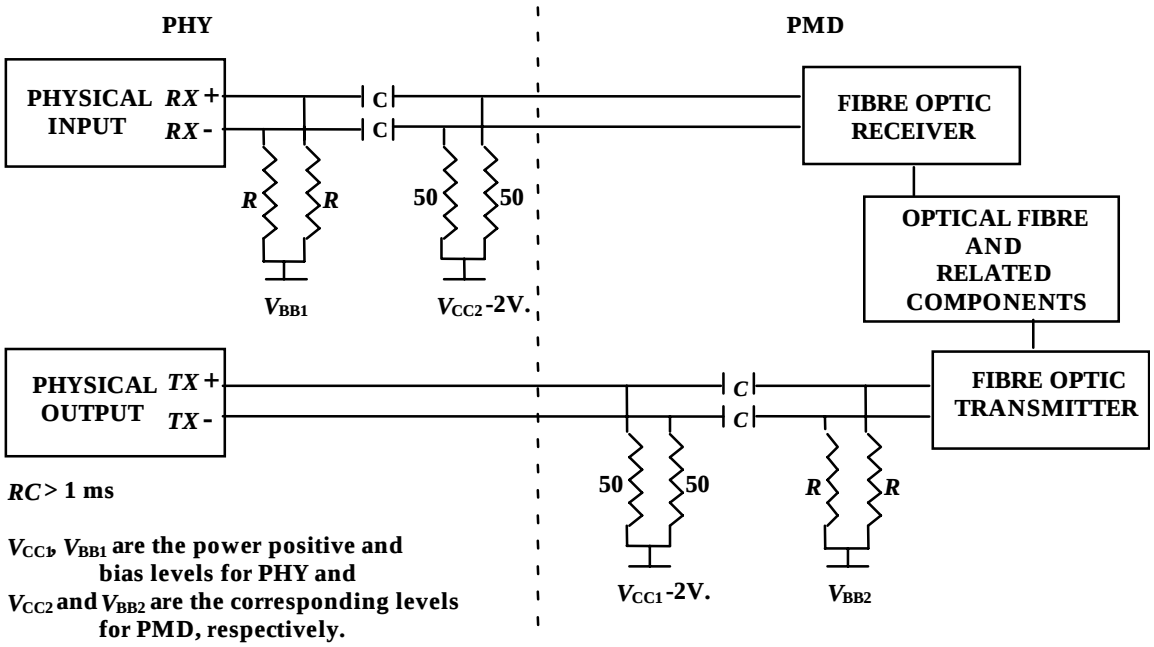

Figure C.2 – Test configuration for a.c. coupled components

Copyright International Organization for Standardization
Reproduced by IHS under license with ISO
No reproduction or networking permitted without license from IHS
Not for Resale

Annex D
(informative)

Example of system jitter allocation

This annex contains an example of a jitter budget for an FDDI physical link.

D.1 Jitter sources

Jitter in the fibre optic components consists of Duty Cycle Distortion (DCD), Data Dependent Jitter (DDJ), and Random Jitter (RJ). Jitter in the recovered clock consists of Static Alignment Error (SAE), DDJ, and RJ components. SAE is an offset of the decision time slot (clock) from the optimal sampling position. When the clock coincides with the optimal sampling position, the minimum BER is achieved. The major causes of SAE are an initial misalignment error and differential delays between data and clock paths induced by temperature fluctuations and aging. See annex A for additional information on jitter measurements and definitions.

The jitter values are expressed as peak-peak values. For RJ, both peak-peak values and r.m.s. values are given. The peak-peak value is defined as that value for which the probability that it will be exceeded is equal to $1{,}0 \times 10^{-12}$. For a Gaussian probability of random jitter, the different components in the link are assumed to be uncorrelated and are assumed to add as the square root of the sum of their squares.

The jitter budget is provided to document the thinking underlying the LCF-PMD specifications and to serve as guidance for the development of LCF-PMD and PHY components. Conforming FDDI stations are required to comply only with the requirements expressed in the main body of this standard. For the interconnection of conforming FDDI attachments, the true requirement for interoperability is at the optical interface provided by each attachment. These requirements are given in clauses 5 and 6.

D.2 Jitter calculation example

The accumulation of peak-peak jitter should not exceed the code-bit period of 8 ns. Using the jitter data from table D.1, the following sample calculation is given:

Total jitter

$$= (\text{PHY In})\ \text{DCD} + (\text{PHY In})\ \text{DDJ} + \text{SAE} + \text{C_DDJ} + (((\text{PHY In})\ \text{RJ})^2 + (\text{C_RJ})^2)^{1/2}$$

$$= 1{,}4 + 1{,}6 + 1{,}5 + ((3{,}00)^2 + (1{,}8)^2)^{1/2}$$

$$= 8{,}0\ \text{ns}$$

Copyright International Organization for Standardization
Reproduced by IHS under license with ISO
No reproduction or networking permitted without license from IHS Not for Resale

Table D.1 – System jitter budget example

ITEM	DCD (p-p) ns	DDJ (p-p) ns	RJ (p-p) ns*
PH_UNITDATA.request (PHY Out)	0,4	0,0	0,32
AOI (PMD Out)	1,0	0,6	0,76
AII (PMD In)	1,0	0,6	0,76
PH_UNITDATA.indication (PHY In)	1,4	1,6	3,00
Clock recovery jitter:**			
SAE and Clock DDJ (C_DDJ) 1,5 ns peak-peak			
Clock RJ (C_RJ) 1,8 ns peak-peak (0,143 ns r.m.s.)			
* Peak-peak RJ components are evaluated at a probability of $1,0 \times 10^{-12}$.			
For a Gaussian distribution, the peak-peak jitter is then 14,0 times the r.m.s. jitter.			
** SAE, C_DDJ, and C_RJ are implementation-dependent.			

Copyright International Organization for Standardization
Reproduced by IHS under license with ISO
No reproduction or networking permitted without license from IHS Not for Resale

Annex E
(informative)

LCF-MIC requirements and testing

This annex gives additional information about LCF-MIC requirements and testing.

E.1 Combined LCF-MIC mechanical-optical requirements

Table E.1 – Informative LCF-MIC plug/receptacle mechanical-optical requirements

Tests	Receptacle Value	Receptacle Method	Plug Value	Plug Method
Axial pull force (latch retention force)	90 N min.	E.3	90 N min. 1,0 dB max. variance	E.7
Duplex insertion/ withdrawal force	10 N min. 80 N max.	E.4	80 N max.	E.8
Single plug Repeatability	1,5 dB max.	E.5		
Cross plug Repeatability	2,0 dB max.	E.6		
Off axis (rotational) pull			20 N min. 1,0 dB max. variance	E.9
Cable/LCF-MIC pull strength (cable to LCF-MIC retention)			90 N min.	E.10
Reliability Insertion/withdrawal Product Life	250 min.	none	250 min.	none

E.2 LCF-MIC testing definitions and conditions

The term “failure” is defined as:

a) increase in attenuation of 1,0 dB or a decrease in return loss of 5 dB as specified per test.

b) mechanical damage defined as splitting, cracking, pitting, galling or deformation observable under ×10 magnification unless otherwise stated for the LCF-MIC ferrule, cable, body or coupler.

c) functional dimensions non-conforming to print requirements after stress.

The application of a stimulus such as a force or environmental condition shall be applied once to demonstrate compliance with the requirement unless otherwise stated. The tolerances given in table E.2 should apply to all connector tests.

--`,,`,,`-`-`,,`,,`,`,,`---

Copyright International Organization for Standardization
Reproduced by IHS under license with ISO
No reproduction or networking permitted without license from IHS Not for Resale

Table E.2 – LCF-MIC test tolerances

Length	±10 %
Angles	±3 °
Rates	±10 %
Weights	±10 %

Before each of the following tests are conducted, clean the ends of the LCF-MIC.

Unless otherwise stated, duplex couplers used for testing shall be mounted between two frame members via the mounting slots.

When duplex cable assemblies are inserted in the receptacle, they shall be cantilevered free of any support.

E.3 LCF-MIC receptacle axial pull test

E.3.1 Purpose

To ensure the receptacle is able to withstand an axial applied plug pull load without degrading optical performance.

E.3.2 Test method

EIT/TiA-455-6 “Cable Retention Test Procedure for Fibre Optic Cable Interconnecting Devices” gives the recommended test method. The plug should be completely latched before the start of testing.

E.4 LCF-MIC receptacle insertion/withdrawal force test

E.4.1 Purpose

To ensure the receptacle is designed to allow for easy insertion of the plug. The test would check the stiffness of the LCF-MIC clips and ferrule/bore fit.

E.4.2 Test method

IEC 61300-3-11 gives the recommended test method.

E.5 LCF-MIC receptacle optical repeatability test

E.5.1 Purpose

Fibre to optical source alignment measurement.

E.5.2 Test method

A minimum of 25 single plug insertions should be repeated on a single receptacle or coupler. The maximum variation between any two insertions should meet the requirements stated in

--`,,`,,`-`-`,,`,,`,`,,`---

Copyright International Organization for Standardization
Reproduced by IHS under license with ISO
No reproduction or networking permitted without license from IHS Not for Resale

E.6 LCF-MIC receptacle optical cross plug repeatability test

E.6.1 Purpose

Fibre to optical source alignment measurement.

E.6.2 Test method

A minimum of 25 different plug insertions should be performed on a single receptacle or coupler. The maximum variation between any two insertions should meet the requirements stated in table E.1.

E.7 LCF-MIC plug axial pull test

E.7.1 Purpose

To ensure minimum plug to receptacle retention force with an axial applied load to the cable. Also tests cable's strain relief. This test is not a breakage test, cable functionality is required during the test.

E.7.2 Test method

IEC 61300-2-4 gives the recommended test method. The plug should be completely latched before the start of testing.

E.8 LCF-MIC plug insertion/withdrawal force test

E.8.1 Purpose

The true measure of ferrule float and housing to housing compliance. Testing would require gauges to check the plug's ability to insert into bores at the four corners of the receptacle tolerance limits.

E.8.2 Test method

IEC 61300-3-11 is the recommended test method. The couplers used for this evaluation should ideally represent the high end of geometric tolerance range in terms of bore position and alignment.

E.9 LCF-MIC plug off axis pull test

E.9.1 Purpose

Ensures that cables can be dressed (neatly restrained) in any direction without loss of optical performance.

E.9.2 Test method

The test method described in 4.5.35 of IEC 60874-1 should be used.

E.10 Cable/LCF-MIC plug pull strength test

E.10.1 Purpose

Test integrity of the fibre to connector strain relief.

Copyright International Organization for Standardization
Reproduced by IHS under license with ISO
No reproduction or networking permitted without license from IHS Not for Resale

E.10.2 Test method

IEC 61300-2-4 gives the recommended test method. The plug should be secured before the start of testing.

Copyright International Organization for Standardization
Reproduced by IHS under license with ISO
No reproduction or networking permitted without license from IHS Not for Resale

Annex F
(informative)

Alternate Optical Interface Connector

This annex defines an alternate optical interface connector.

The optical interface connector, and optical receptacle conforms to the type ST connector documented in IEC 60874-10.

Two simplex plugs may be connected in a resilient manner to allow relative movement. However, it is recognized that a possible means of accomplishing this will include the attachment of a holding or clamping mechanism between two simplex plugs.

Such arrangements will of necessity increase the physical size of the individual plugs above the attachment point and present the possibility of mechanical interference with objects in the vicinity of the receptacle. An example of such an object would be a cover panel. In order to provide for this situation the plug should not exceed the clearance zone dimensions.

Warning: In the design of a duplex plug assembly, great care should be taken to ensure plugability with the receptacle. Ferrule to its grip body float is required for each connector. In addition one connector grip body to another connector grip body float is required for each connector. These floats are required for interoperability.

Copyright International Organization for Standardization
Reproduced by IHS under license with ISO
No reproduction or networking permitted without license from IHS Not for Resale

Annex G
(informative)

Labelling considerations

G.1 General

This annex describes recommended practices for connector and cable labelling for FDDI equipment.

The original PMD standard defines the use of FDDI Media Interface Connectors (MIC). The MIC includes two types of keying. Polarity keying prevents the transmit and receive signal paths from being reversed. Port type keying prevents the establishment of undesirable connection paths that would result in an FDDI network topology violation.

This LCF-PMD standard defines a Low-Cost Fibre MIC (LCF-MIC), and in an informative annex an alternative optical interface connector, that includes polarity keying, but not port type keying. Because port type keying was eliminated, it is now possible to inadvertently attempt to establish an illegal connection. Illegal connections are usually rejected by Station Management based on connection signaling. Forcing this situation is not desirable, and can be minimized through the implementation of port type labelling on the equipment, the fibre optic cable, and the wall jack if appropriate.

G.2 FDDI station labelling

The FDDI station should be labeled in a location approximately close to or on the station port to identify it as an FDDI device, and provide information to assist in the proper network connection. The labelling system, described in Table G.1, provides information on the connector type, PMD and port type.

On equipment with multiple station ports of the same classification, a single label may be used if it improves the identification of the station ports.

FDDI stations supporting field reconfiguration should also include field configurable labelling. As an example, an SAS station could be reconfigured to a DAS station. The original SAS port label should be changed to reflect the new port type. A less desirable alternative is to dual label those ports capable of field configuration. This should be done only in those cases where the proper port type is obviously based on the station configuration. The “S” type port could be dual marked as “S/B”, with the assumption that the port is “S” type when configured as an SAS station, and “B” when configured as a DAS station.

Copyright International Organization for Standardization
Reproduced by IHS under license with ISO
No reproduction or networking permitted without license from IHS Not for Resale

Table G.1 – FDDI station labelling recommendation

Code meaning	Code letter
Connector type	
MIC	M
LCF-MIC SC type	C
LCF-MIC ST type	T
IEC 60603-7	J
DB-9	D
PMD type	
Original PMD	P
LCF-PMD	L
TP-PMD (DTP)	D
TP-PMD (STP)	S
TP-PMD (UTP)	U
SMF-PMD (rcv/xmt type 1)	1
SMF-PMD (rcv/xmt type 2)	2
SMF-PMD (rcv type 1, xmt type 2)	3
SMF-PMD (rcv type 2, xmt type 1)	4
SPM	H
Port type	
A port	A
B port	B
Master port	M
Slave port	S

The recommended label format is:

FDDI-XYZ, where

X=Connector type,

Y=PMD type,

Z=Port type

Some examples of this scheme are:

FDDI-CLS refers to an **SC** type connector on an **LCF-PMD** type interface, which is acting as a single attach **Slave** type port

FDDI-JDM refers to an **IEC 60603-7** type connector on a **TP-PMD DTP** type interface, which is acting as a single attach **Master** type port

Copyright International Organization for Standardization
Reproduced by IHS under license with ISO
No reproduction or networking permitted without license from IHS Not for Resale

Bibliography

IEC 60874-1:1993*, Connectors for optical fibre and cables – Part 1: Generic specification*

IEC 60874-10, *Connectors for optical fibres and cables – Part 10: Sectional specification – Fibre optic connector type BFOC/2,5*

IEC 61280-1-2,— *Fibre optic communication subsystem basic test procedures – Part 1-2: Test procedures for general communication systems – Transmitter output optical power measurement for multimode fibre optic cable*

IEC 61300-2-4, *Fibre optic interconnecting devices and passive components – Basic test and measurement procedures – Part 2-4: Tests – Fibre/cable retention*

IEC 61300-3-11, *Fibre optic interconnecting devices and passive components – Basic test and measurement procedures – Part 3-11: Examinations and measurements – Engagement and separation forces*

EIT/TiA-455-6, *Cable Retention Test Procedure for Fibre Optic Cable Interconnecting Devices*

_____

Copyright International Organization for Standardization
Reproduced by IHS under license with ISO
No reproduction or networking permitted without license from IHS Not for Resale

Standards Survey

The IEC would like to offer you the best quality standards possible. To make sure that we continue to meet your needs, your feedback is essential. Would you please take a minute to answer the questions overleaf and fax them to us at +41 22 919 03 00 or mail them to the address below. Thank you!

Customer Service Centre (CSC)

International Electrotechnical Commission
3, rue de Varembé
1211 Genève 20
Switzerland

or

Fax to: **IEC**/CSC at +41 22 919 03 00

Thank you for your contribution to the standards-making process.

Nicht frankieren
Ne pas affranchir

Non affrancare
No stamp required

A Prioritaire

RÉPONSE PAYÉE

SUISSE

Customer Service Centre (CSC)
International Electrotechnical Commission
3, rue de Varembé
1211 GENEVA 20
Switzerland

Copyright International Organization for Standardization
Reproduced by IHS under license with ISO
No reproduction or networking permitted without license from IHS
Not for Resale

Q1 Please report on **ONE STANDARD** and **ONE STANDARD ONLY**. Enter the exact number of the standard: *(e.g. 60601-1-1)*

.....

Q2 Please tell us in what capacity(ies) you bought the standard *(tick all that apply).* I am the/a:

purchasing agent ❑
librarian ❑
researcher ❑
design engineer ❑
safety engineer ❑
testing engineer ❑
marketing specialist ❑
other.....

Q3 I work for/in/as a: *(tick all that apply)*

manufacturing ❑
consultant ❑
government ❑
test/certification facility ❑
public utility ❑
education ❑
military ❑
other.....

Q4 This standard will be used for: *(tick all that apply)*

general reference ❑
product research ❑
product design/development ❑
specifications ❑
tenders ❑
quality assessment ❑
certification ❑
technical documentation ❑
thesis ❑
manufacturing ❑
other.....

Q5 This standard meets my needs: *(tick one)*

not at all ❑
nearly ❑
fairly well ❑
exactly ❑

Q6 If you ticked NOT AT ALL in Question 5 the reason is: *(tick all that apply)*

standard is out of date ❑
standard is incomplete ❑
standard is too academic ❑
standard is too superficial ❑
title is misleading ❑
I made the wrong choice ❑
other .....

Q7 Please assess the standard in the following categories, using the numbers:
(1) unacceptable,
(2) below average,
(3) average,
(4) above average,
(5) exceptional,
(6) not applicable

timeliness.....
quality of writing.....
technical contents.....
logic of arrangement of contents .....
tables, charts, graphs, figures.....
other .....

Q8 I read/use the: *(tick one)*

French text only ❑
English text only ❑
both English and French texts ❑

Q9 Please share any comment on any aspect of the IEC that you would like us to know:

.....
.....
.....
.....
.....
.....
.....
.....
.....
.....
.....
.....

--`,,```,,,,````-`-`,,`,,`,`,,`---
Copyright International Organization for Standardization
Reproduced by IHS under license with ISO
No reproduction or networking permitted without license from IHS
Not for Resale

Copyright International Organization for Standardization
Reproduced by IHS under license with ISO
No reproduction or networking permitted without license from IHS
Not for Resale

ISBN 2-8318-5260-9



ICS 35.100.10; 33.180.10

Typeset and printed by the IEC Central Office
GENEVA, SWITZERLAND

Copyright International Organization for Standardization
Reproduced by IHS under license with ISO
No reproduction or networking permitted without license from IHS

Not for Resale