8881 89 ■ 4851903 0105973 9 ■

INTERNATIONAL STANDARD ISO/IEC 8881 : 1989
TECHNICAL CORRIGENDUM 1

Published 1991-05-15

INTERNATIONAL ORGANIZATION FOR STANDARDIZATION • МЕЖДУНАРОДНАЯ ОРГАНИЗАЦИЯ ПО СТАНДАРТИЗАЦИИ • ORGANISATION INTERNATIONALE DE NORMALISATION
INTERNATIONAL ELECTROTECHNICAL COMMISSION • МЕЖДУНАРОДНАЯ ЭЛЕКТРОТЕХНИЧЕСКАЯ КОМИССИЯ • COMMISSION ÉLECTROTECHNIQUE INTERNATIONALE

Information processing systems — Data communications — Use of the X.25 packet level protocol in local area networks

TECHNICAL CORRIGENDUM 1

Systèmes de traitement de l'information — Communication de données — Emploi du protocole X.25 au niveau paquet dans des réseaux locaux

RECTIFICATIF TECHNIQUE 1

Technical corrigendum 1 to International Standard ISO/IEC 8881:1989 was prepared by ISO/IEC JTC 1, *Information technology.*

Page 1

Subclause 3.3

Add the following:

"e) DSAP
f) SSAP"

Clause 4

Insert in alphabetical order the following:

"DSAP Destination Service Access Point
SSAP Source Service Access Point"

Page 2

Clause 5

Add a second paragraph as follows:

"The use of the X.25 PLP on a LAN shall be identified by setting the value of both the DSAP and SSAP addresses to "x111 1110"."

UDC 681.3 : 621.39 **Ref. No. ISO/IEC 8881 : 1989/Cor.1 : 1991 (E)**

Descriptors: data processing, data transmission, network interconnection, open systems interconnection, local area networks, data terminal equipment, communication procedure, control procedures.

© ISO/IEC 1991

Printed in Switzerland

Copyright International Organization for Standardization
Provided by IHS under license with ISO
No reproduction or networking permitted without license from IHS

Not for Resale

8881-89 4851903 0079624 6

Q-60-71

INTERNATIONAL STANDARD

ISO/IEC 8881

First edition
1989-12-01

Information processing systems — Data communications — Use of the X.25 packet level protocol in local area networks

Systèmes de traitement de l'information — Communication de données — Emploi du protocole X.25 au niveau paquet dans des réseaux locaux

Reference number
ISO/IEC 8881 : 1989 (E)

Copyright International Organization for Standardization
Provided by IHS under license with ISO
No reproduction or networking permitted without license from IHS

Not for Resale

Contents

Page

Foreword iii

Introduction iv

Section 1 : General

1 Scope 1

2 Normative references 1

3 Definitions 1

4 Abbreviations 1

5 Underlying layer considerations 2

6 Packet Level considerations 2

Section 2 : Operation with LLC Type 2 procedures

7 System parameters 3

8 Startup operation 3

Section 3 : Operation with LCC Type 1 procedures

9 Applicability of LLC Type 1 procedures 4

10 System parameters 4

11 Startup operation 4

12 Using the broadcast capability 5

Section 4 : Conformance requirements

13 Conformance 6

© ISO/IEC 1989
All rights reserved. No part of this publication may be reproduced or utilized in any form or by any means, electronic or mechanical, including photocopying and microfilm, without permission in writing from the publisher.

ISO/IEC Copyright Office • Case postale 56 • CH-1211 Genève 20 • Switzerland

Printed in Switzerland

Copyright International Organization for Standardization
Provided by IHS under license with ISO
No reproduction or networking permitted without license from IHS Not for Resale

Foreword

ISO (the International Organization for Standardization) and IEC (the International Electrotechnical Commission) together form a system for worldwide standardization as a whole. National bodies that are members of ISO or IEC participate in the development of International Standards through technical committees established by the respective organization to deal with particular fields of technical activity. ISO and IEC technical committees collaborate in fields of mutual interest. Other international organizations, governmental and non-governmental, in liaison with ISO and IEC, also take part in the work.

In the field of information technology, ISO and IEC have established a joint technical committee, ISO/IEC JTC 1. Draft International Standards adopted by the joint technical committee are circulated to national bodies for approval before their acceptance as International Standards. They are approved in accordance with procedures requiring at least 75 % approval by the national bodies voting.

International Standard ISO/IEC 8881 was prepared by Joint Technical Committee ISO/IEC JTC 1, *Information technology.*

Copyright International Organization for Standardization
Provided by IHS under license with ISO
No reproduction or networking permitted without license from IHS
Not for Resale

8881-89 4851903 0079627 1

Introduction

ISO 8802 specifies the Medium Access Control (MAC) and Logical Link Control (LLC) procedures for accessing a Local Area Network (LAN). This International Standard specifies the use of the X.25 Packet Level Protocol (PLP) (both X.25/PLP:1980 and X.25/PLP:1984), as specified in ISO 8208, to provide additional capabilities beyond those available using the MAC and LLC procedures. These additional capabilities include the ability to support the OSI Connection-mode Network Service in a LAN station, as specified in ISO 8878, and the ability to attach terminals to a LAN station acting as a Packet Assembly/Disassembly Facility (see, for example, CCITT Recommendations X.3, X.28, and X.29).

The X.25 PLP provides several functional capabilities that include, but are not limited to

a) multiplexing — the ability to support multiple data streams;

b) transfer of addressing information — the ability to transfer addressing information, including OSI Network Service Access Point addresses;

c) segmenting and reassembly — the ability to divide a data unit into smaller packets for transfer over a LAN and to reassemble packets into the original data unit;

d) flow control — the ability to control, for each data stream, the flow of data between transmitting and receiving Data Terminal Equipment (DTE);

e) transfer of expedited data — the ability to transfer a small amount of data outside the normal flow-control procedures;

f) error control — the ability to detect errors at the Packet Level; and

g) reset and restart — the ability to reinitialize communication paths at the Packet Level in the event that non-recoverable error conditions are encountered.

When using the X.25 PLP within a LAN, the X.25 PLP operates in the point-to-point (DTE-to-DTE) mode without an intervening packet-switched network. The LAN station operates one Packet Level Entity for each DTE/DTE interface (i.e., for each station with which it communicates).

ISO/IEC/TR 10029 describes the operation of an interworking unit to connect an X.25 Packet Level Entity in a LAN station to another X.25 Packet Level Entity.

Copyright International Organization for Standardization
Provided by IHS under license with ISO
No reproduction or networking permitted without license from IHS
Not for Resale

INTERNATIONAL STANDARD ISO/IEC 8881 : 1989 (E)

Information processing systems — Data communications — Use of the X.25 packet level protocol in local area networks

Section 1: General

1 Scope

This International Standard deals with the use of the X.25 Packet Level Protocol (PLP) as specified in ISO 8208 operating over ISO 8802 Local Area Networks (LANs).

Section 2 of this International Standard specifies the operation of the X.25/PLP using the Logical Link Control (LLC) Type 2 procedures defined in ISO 8802-2. Section 3 of this International Standard specifies the operation of the X.25/PLP using the LLC Type 1 procedures defined in ISO 8802-2.

2 Normative references

The following standards contain provisions which, through reference in this text, constitute provisions of this International Standard. At the time of publication, the editions indicated were valid. All standards are subject to revision, and parties to agreements based on this International Standard are encouraged to investigate the possibility of applying the most recent editions of the standards listed below. Members of IEC and ISO maintain registers of currently valid International Standards.

ISO 7498:1984, *Information processing systems — Open Systems Interconnection — Basic Reference Model.*

ISO 8208:1987, *Information processing systems — Data communications — X.25 Packet Level Protocol for Data Terminal Equipment.*

ISO 8208/Add. 1: ...,[1] *Information processing systems — Data communications — X.25 Packet Level Protocol for Data Terminal Equipment — Addendum 1: Alternative logical channel number allocation.*

ISO 8348/Add. 2:1988, *Information processing systems — Data communications — Network service definition — Addendum 2: Network layer addressing.*

ISO 8802-2: ...,[1] *Information processing systems — Local area networks — Part 2: Logical link control.*

ISO 8878:1987, *Information processing systems — Data communications — Use of X.25 to provide the OSI connection-mode network service.*

1) To be published

ISO/IEC/TR 10029:1989, *Information processing systems — Data communications — Operation of an X.25 interworking unit.*

3 Definitions

3.1 Reference Model definitions

This International Standard makes use of the following terms defined in ISO 7498:

a) OSI Network Service
b) OSI Network Service Access Point address

3.2 Addressing definitions

This International Standard makes use of the following term defined in ISO 8348/Add. 2:

a) Subnetwork Point of Attachment address

3.3 Local Area Network definitions

This International Standard makes use of the following terms defined in ISO 8802:

a) Local Area Network
b) Logical Link Control
c) Medium Access Control
d) Data Link Layer Service Access Point address

3.4 X.25 Packet Level Protocol definitions

This International Standard makes use of the following terms defined in ISO 8208:

a) Packet Level Entity
b) Virtual Call
c) Logical Channel
d) Lowest Incoming Channel
e) Highest Incoming Channel
f) Lowest Two-way Channel
g) Highest Two-way Channel
h) Lowest Outgoing Channel
i) Highest Outgoing Channel

4 Abbreviations

CCITT	International Telegraph and Telephone Consultative Committee
DCE	Data Circuit-terminating Equipment
DTE	Data Terminal Equipment

Copyright International Organization for Standardization
Provided by IHS under license with ISO
No reproduction or networking permitted without license from IHS
Not for Resale

HIC	Highest Incoming Channel
HOC	Highest Outgoing Channel
HTC	Highest Two-way Channel
LAN	Local Area Network
LCN	Logical Channel Number
LIC	Lowest Incoming Channel
LLC	Logical Link Control
LOC	Lowest Outgoing Channel
LTC	Lowest Two-way Channel
MAC	Medium Access Control
NSAP	Network Service Access Point
PDU	Protocol Data Unit
PL	Packet Level
PLP	Packet Level Protocol
SNPA	Subnetwork Point of Attachment
XID	Exchange Identification

5 Underlying layer considerations

When the X.25 PLP is used in a LAN, it is used in the point-to-point (DTE-to-DTE) mode allowed by ISO 8208. In this case, each LAN station acts as a DTE. The LAN station (conceptually) operates one PL Entity for each DTE/DTE interface in which it is involved (i.e., for each remote LAN station with which it communicates). Within a LAN station, the PL Entity associated with a DTE/DTE interface is identified by the Medium Access Control (MAC) Address of the remote LAN station. The DTE/DTE interface is thus identified by the pair of MAC Addresses of the two LAN stations associated with the interface. These concepts are illustrated in Figure 1.

6 Packet Level considerations

6.1 Logical channel number assignment

In the case of DTE/DTE communication over LANs, the task of agreeing to the ranges of logical channels available for each pair of communicating DTEs is potentially difficult. Different stations on a LAN, performing different functions over X.25 PLP, could have very different requirements in terms of the number of simultaneous Virtual Calls to be handled when communicating with another individual LAN station. To alleviate this problem, the following scheme is used.

The LAN administration defines the logical-channel ranges (LIC, HIC, LTC, HTC, LOC, and HOC in ISO 8208) to be used by all DTEs attached to the LAN. Note that one occurrence of the logical-channel range parameters (LIC, etc.) exists for each X.25 PL Entity in a DTE and, therefore, multiple occurrences of all logical-channel numbers (up to the number of X.25 PL Entities) can result. A DTE may then assume that all logical channels within the defined ranges are available for use according to the procedures defined in ISO 8208.

However, a DTE need not allocate resources for all available logical channels. A DTE receiving an INCOMING CALL packet specifying a valid LCN within the defined range but which is not capable of accepting the call due to lack of logical-channel resources shall clear the call. In this case, the cause is "DTE Originated" and the diagnostic is "DTE Resource Constraint" (163).

One DTE assumes the role of a DCE for the purpose of logical-channel selection according to the procedures defined in ISO 8208. Clauses 8 and 11 below define the startup procedures to determine which DTE assumes the DCE role.

The On-line Facility Registration Facility may be used by a pair of DTEs to redefine the logical-channel ranges to be used between those DTEs (i.e., to change the values of LIC, etc.). The use of this facility requires prior, bilateral agreement between the DTEs.

NOTE — Following redefinition of the logical-channel ranges, the same considerations mentioned previously regarding the availability of resources to valid LCNs apply.

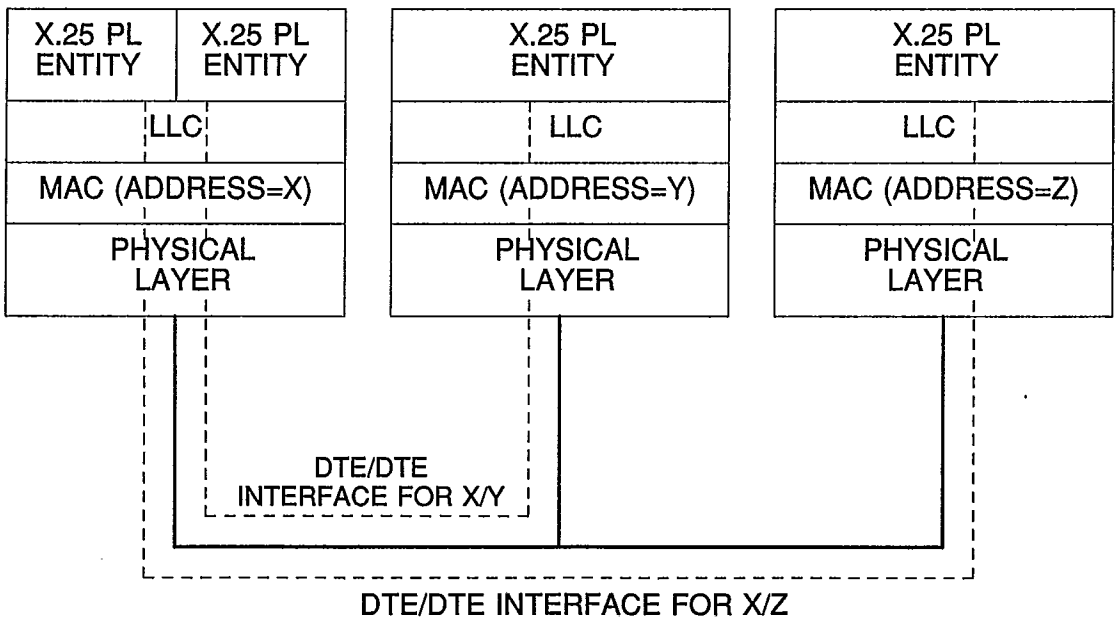

NOTE — The X.25 PLP is identified by a single Data Link Layer Service Access Point address.

Figure 1

Copyright International Organization for Standardization
Provided by IHS under license with ISO
No reproduction or networking permitted without license from IHS
Not for Resale

6.2 Optional user facilities

The following subset of the optional user facilities that apply to DTE/DTE operation is established for DTEs operating the X.25/PLP over an ISO 8802 LAN according to this International Standard:

a) On-line Facility Registration;
b) Extended Packet Sequence Numbering;
c) One-way Outgoing Logical Channels;
d) One-way Incoming Logical Channels;
e) Nonstandard Default Packet Sizes;
f) Nonstandard Default Window Sizes;
g) Default Throughput Classes Assignment;
h) Flow Control Parameter Negotiation;
i) Throughput Class Negotiation;
j) Fast Select;
k) Transit Delay Selection And Indication;
l) Calling Address Extension;
m) Called Address Extension;
n) Minimum Throughput Class Negotiation;
o) End-to-end Transit Delay Negotiation; and
p) Expedited Data Negotiation.

For each of the facilities (e), (f), and (g), every station on the LAN should use the same value.

NOTE — Throughput, in the X.25 PLP sense, is a measure of the number of bits per second of user data that a higher layer entity needs to transfer over a particular virtual circuit. In turn, it implies an allocation of resources in the LAN station to support the required throughput for the environment applicable to the virtual circuit. This environment includes the underlying transmission (i.e., LAN) medium. Therefore, throughput should not be understood, in this context, to be the throughput of the LAN medium.

A bilateral agreement or the On-line Facility Registration Facility can be used by a pair of DTEs to adjust the optional user facilities to meet any special needs of that pair of DTEs. In addition to the facilities listed above, the applicability of the Incoming Calls Barred Facility, the Outgoing Calls Barred Facility, and the Fast Select Acceptance Facility can be adjusted using the On-line Facility Registration Facility.

6.3 Default packet sizes and window sizes

The currently-defined standard and nonstandard default packet sizes and window sizes in ISO 8208 shall be supported.

To make optimum use of the underlying technology, a LAN administration may choose nonstandard default packet sizes and window sizes from the possibilities defined in ISO 8208. However, the underlying MAC Sublayer may constrain the maximum packet sizes available.

NOTES

1 Where a Packet Level window larger than 7 is needed, the Extended Packet Sequence Numbering Facility can be used.

2 To make better use of the underlying LAN technology, it might be desirable to define a nonstandard default packet size in addition to those defined in ISO 8208. The value of such a nonstandard default packet size would be bounded by the maximum number of octets that the User Data Field of a DATA packet can have in the LAN implementation. This value is then reduced to the nearest multiple of 128 octets. The value of the nonstandard default packet size thus calculated is not available with the Flow Control Parameter Negotiation Facility or the On-line Facility Registration Facility.

Section 2: Operation with LLC Type 2 procedures

7 System parameters

7.1 Timers

Timers and their method of operation are defined in ISO 8208. Table 1 indicates the applicable timers and their default values when using the X.25/PLP with LLC Type 2 procedures.

TABLE 1 —
X.25 PLP Timers For Operation In A LAN

Timer	LLC Type 2 Default Time-Limit Value (s)
T20 (Restart Request Response Timer)	36
T21 (Call Request Response Timer)	40
T22 (Reset Request Response Timer)	36
T23 (Clear Request Response Timer)	36
T24 (Window Status Transmission Timer)	12
T25 (Window Rotation Timer)	40
T26 (Interrupt Response Timer)	36
T28 (Registration Request Response Timer)	60

NOTES

1 The time-limit values shown are only defaults (these default values differ from those specified in ISO 8208). The actual values chosen may depend on a number of factors, including the need to detect problems quickly, the MAC procedures in use, the desirability of using the defaults of ISO 8208, etc. However, if other values are chosen, then all stations on the LAN should operate with the chosen values.

While the time-limit values may differ from the default values shown, the values chosen must preserve the relationship between the time-limit values shown to ensure proper operation. This is particularly the case for T22 and T25 when optional features (from ISO 8208) have been selected.

2 A LAN station X.25 PLP should take into consideration the value of these timers to ensure that it responds within an acceptable time period.

7.2 Retransmission counts

Retransmission counts, their method of operation, and their default values are specified in ISO 8208.

8 Startup operation

To establish a Virtual Call, the LAN station initiates link establishment between itself and the remote LAN station as specified by LLC Type 2 procedures, if a link is not already established.

NOTES

1 A link-establishment collision will be resolved as specified by LLC Type 2 procedures.

2 An idle link — that is, one which is not carrying an established logical channel or a logical channel in the process of being established — may be disconnected by either LAN station.

Copyright International Organization for Standardization
Provided by IHS under license with ISO
No reproduction or networking permitted without license from IHS
Not for Resale

The default value of the maximum number of outstanding I PDUs shall be 7 (ISO 8802-2).

NOTE — The value can be altered by a LAN administration or by the mechanisms available in ISO 8802-2.

Once the LLC Type 2 link is established between two LAN DTEs, the "role" of each DTE can be determined by means of the restart procedure defined in subclause 4.5 of ISO 8208. At the end of this restart sequence, one LAN station adopts the role of a DTE and the other a DCE. These roles apply, during Virtual-Call establishment, to logical-channel selection and call-collision resolution.

NOTE — ISO 8208 requires the use of the restart procedure, independently of the method of role selection.

Section 3: Operation with LLC Type 1 procedures

9 Applicability of LLC Type 1 procedures

The X.25/PLP may be operated with LLC Type 1 procedures in configurations in which the negligible packet misordering, duplication, and loss requirements of ISO 8208 are satisfied, or where the incidence of X.25/PLP signalled errors represents an acceptable quality of service to the X.25/PLP user.

NOTE — The decision to use LLC Type 1 procedures in a given instance of communication is outside the scope of this International Standard. The bases for such a decision include

a) the availability of a priori knowledge of the capabilities of the remote LAN station with which communication is desired;

b) the use of the XID procedure of ISO 8802-2 to determine the capabilities of the remote LAN station;

c) the failure of an initial attempt to use LLC Type 2 procedures, in which case, following the failure of the link-connection establishment procedure, a system capable of operating X.25/PLP with LLC Type 1 procedures may attempt to do so.

10 System parameters

10.1 Timers

Timers and their method of operation are defined in ISO 8208. Table 2 indicates the applicable timers and their default values when using the X.25 PLP in LAN stations.

TABLE 2 —
X.25 PLP Timers For Operation In A LAN

Timer	LLC Type 1 Default Time-Limit Value (s)
T20 (Restart Request Response Timer)	1
T21 (Call Request Response Timer)	1
T22 (Reset Request Response Timer)	1
T23 (Clear Request Response Timer)	1
T24 (Window Status Transmission Timer)	1,5
T25 (Window Rotation Timer)	2
T26 (Interrupt Response Timer)	1
T28 (Registration Request Response Timer)	1

NOTES

1 The time-limit values shown are only defaults (these default values differ from those specified in ISO 8208). The actual values chosen may depend on a number of factors, including the need to detect problems quickly, the MAC procedures in use, the desirability of using the defaults of ISO 8208, etc. However, if other values are chosen, then all stations on the LAN should operate with the chosen values.

While the time-limit values may differ from the default values shown, the values chosen must preserve the relationship between the time-limit values shown to ensure proper operation. This is particularly the case for T22 and T25 when optional features (from ISO 8208) have been selected.

2 A LAN station X.25 PLP should take into consideration the value of these timers to ensure that it responds within an acceptable time period.

10.2 Retransmission counts

Retransmission counts and their method of operation are defined in ISO 8208. Table 3 indicates the applicable retransmission counts and their default values when using the X.25 PLP in LAN stations.

TABLE 3 — X.25 PLP Retransmission Counts For Operation In A LAN

Retransmission Count	LLC Type 1 Default Value
R20 (Restart Request Retransmission Count)	1
R22 (Reset Request Retransmission Count)	1
R23 (Clear Request Retransmission Count)	1
R25 (Data Packet Retransmission Count)	0*
R28 (Registration Request Retransmission Count)	1

* While the default value of R25 specified in ISO 8208 is zero, as an option when using LLC Type 1 procedures, R25 may be set greater than 0, thus providing for DATA packet retransmission capabilities (see ISO 8208). In this case, the transmitter option should be to retransmit the window (as per option (b) of subclause 11.2.1 of ISO 8208) and the receiver option should be to ignore DATA packets with an invalid P(S) (as per option (c) of subclause 11.3 of ISO 8208).

11 Startup operation

Subclause 4.5 of ISO 8208 recommends a procedure to determine the "role" of a DTE with respect to logical-channel selection and call-collision resolution. For this procedure to function, ISO 8208 assumes a connection-mode underlying layer.

When using LLC Type 1 procedures, there is no concept of an underlying connection. To determine the DTE's role as mentioned above, the LAN station, when needing to establish a Virtual Call, shall ascertain whether there are any calls established or in progress of being established to the destination LAN station. If not, then the restart

Copyright International Organization for Standardization
Provided by IHS under license with ISO
No reproduction or networking permitted without license from IHS
Not for Resale

procedure and the optional On-line Facility Registration Facility, if used, shall be performed first. The CALL REQUEST packet is then transmitted.

When using the Reference Number Facility to provide an alternative logical channel-number assignment (see ISO 8208/Add.1), subclause 4.5 of ISO 8208 does not apply.

12 Using the broadcast capability

The broadcast capability of LLC Type 1 procedures may be used to send some X.25 PLP packets to more than one destination. It specifically applies to the case of the CALL REQUEST packet and the RESTART REQUEST packet.

Use of this capability with a CALL REQUEST packet requires use of the Reference Number Facility (see ISO 8208/Add. 1).

In the following clauses, the term *broadcast* is used to indicate transmission with the *all-station* or a multicast MAC Address on the LAN. The LAN administration defines which address is to be used by all DTEs attached to the LAN.

12.1 Broadcast of a CALL REQUEST packet

It might be convenient on a LAN to implement a "Distributed Network Directory." Consider a LAN station that does not know the MAC Address (or DTE address) of its called party but only knows its NSAP Address. The LAN station broadcasts its call but only the called DTE will recognize its NSAP Address (or DTE Address) and answer the call.

The broadcast mechanisms described here apply in cases where the originating DTE expects only one answer.

Only one PL Entity can operate above a single MAC Address.

12.1.1 Response to a CALL REQUEST packet

A DTE that broadcasts a CALL REQUEST packet shall fill the Called Address Field and/or the Called Address Extension Facility with the address it wants to reach. The originating DTE can then receive

a) no answer;
b) a negative answer first (CLEAR INDICATION);
c) a positive answer first (CALL CONNECTED or INCOMING CALL); or
d) an erroneous answer.

Multiple responses to a broadcasted CALL REQUEST packet, as discussed in 12.1.1.2 and 12.1.1.3, are error conditions.

A DTE receiving a global CALL REQUEST packet that does not recognize its NSAP Address (or DTE Address) shall not transmit a CLEAR REQUEST packet.

12.1.1.1 No answer

If the calling DTE has received no answer and its timer T21 has expired, it shall broadcast a CLEAR REQUEST packet, with the extended format and the Called DTE Address. The logical channel is then in the DTE CLEAR REQUEST (p6) state. Upon reception of a CLEAR CONFIRMATION packet, it enters the READY (p1) state.

12.1.1.2 The DTE receives a negative answer first

The DTE receiving a CLEAR INDICATION packet shall discard all subsequent clearing packets, treat the first INCOMING CALL packet (if any) as a call request, and clear all the CALL CONNECTED packets (if any).

In fact, upon reception of the first CLEAR INDICATION packet, the reference that was assigned to this virtual circuit is unused and can be assigned to the Virtual Call (if any) created at the reception of the INCOMING CALL packet (if any).

12.1.1.3 The DTE receives a positive answer first

The DTE receiving a positive answer can then receive positive, negative, or erroneous answers. If it receives erroneous answers, they shall be treated in the way described in ISO 8208.

If the DTE receives a negative answer, this answer (carrying the reference number assigned to the logical channel) can have

a) the same MAC Address as the previous positive answer; or
b) a MAC Address different from the previous answer.

In Case (a), the originating DTE shall confirm the clearing of the call by sending a CLEAR CONFIRMATION packet.

In Case (b), if the MAC Address is different, the originating DTE shall send a CLEAR CONFIRMATION packet to the station with the MAC Address that just arrived. It should be noted that the first connection is still valid and that the reference numbers are still assigned to it.

If the DTE receives a second positive answer, this answer (carrying the reference number assigned to the logical channel) can have

a) the same MAC Address as the first one; or
b) a MAC Address different from the first one.

In Case (a), the originating DTE shall clear the call by sending a CLEAR REQUEST packet with neither Calling nor Called DTE Addresses to the station with the MAC Address it received. Upon completion of the clearing procedure, it shall terminate the assignment of the reference number to this particular virtual circuit.

For Case (b), the originating DTE shall send a CLEAR REQUEST packet. It then enters the DTE CLEAR REQUEST (p6) state. The reference-number assignment of the first response is still valid.

12.1.1.4 Erroneous answers

The DTE receiving an erroneous answer shall treat it in the way described in ISO 8208.

12.1.2 Receipt of an INCOMING CALL packet on an active logical channel

If a DTE receives an INCOMING CALL packet with the logical channel identifier equal to a reference number currently assigned to a Virtual Call, the DTE shall respond by sending a CLEAR REQUEST packet to the station with the MAC Address that just arrived, with the logical channel identifier equal to that in the INCOMING CALL packet, a clearing cause of "DTE Originated," and a diagnostic of "Facility Not Provided When Expected" (76). It then enters the DTE CLEAR REQUEST (p6) state. It should be noted that the first connection is still valid and that the reference numbers are still assigned to it.

NOTE — This situation will only occur when the Reference Number Facility is *not* used when operating the X.25 PLP over LLC Type 1.

Copyright International Organization for Standardization
Provided by IHS under license with ISO
No reproduction or networking permitted without license from IHS
Not for Resale

12.2 Broadcast of a RESTART REQUEST packet

There is a need to have, in a LAN environment, a mechanism equivalent to the restart procedure of an X.25 DTE/DCE interface. The restart mechanism is used to clear all the Virtual Calls of a specific DTE.

A LAN station might want to indicate to all the other stations on a LAN that it is clearing all its Virtual Calls. It does so by broadcasting a RESTART REQUEST packet. Two cases can then occur.

CASE 1 — The DTE has knowledge of the Subnetwork Point of Attachment Addresses of all the stations on a LAN:

Upon sending, by broadcast, a RESTART REQUEST packet, the DTE enters the DTE RESTART REQUEST (r2) state. It shall then check all the RESTART CONFIRMATION packets it receives against the table of all the LAN stations by looking at the SNPA Address. If any DTE has not confirmed the restart, the originating DTE shall transmit a RESTART REQUEST packet across each of these interfaces. Upon completion of this second restart cycle, each logical channel is in the READY (p1) state.

NOTES

1 The originating DTE also checks the MAC Address of the incoming RESTART CONFIRMATION packets. If they do not appear in its table, it discards such packets and does not treat them as protocol errors.

2 The receiver of a global RESTART REQUEST packet should use the remote MAC Address to determine which virtual circuits should be cleared.

CASE 2 — The DTE has no knowledge of the addresses on a LAN:

Each logical channel is then in the READY (p1) state. It should be noted that a DTE should discard all the RESTART CONFIRMATION packets and not treat them as protocol errors if this procedure is implemented.

Section 4: Conformance requirements

13 Conformance

Systems claiming conformance to this International Standard shall implement the procedures in clauses 5 and 6 of Section 1 and the procedures described in Section 2 (operation with LLC Type 2 procedures). Systems may optionally also implement the procedures described in Section 3 (operation with LLC Type 1 procedures).

NOTE — The use of LLC Type 1 procedures permits a system to interoperate with another system (which does not conform to this International Standard) in which only LLC Type 1 procedures can be used.

Copyright International Organization for Standardization
Provided by IHS under license with ISO
No reproduction or networking permitted without license from IHS
Not for Resale

ISO/IEC 8881 : 1989 (E)

UDC 681.3 : 621.39

Descriptors : data processing, data transmission, network interconnection, open systems interconnection, data terminal equipment, communication procedure, control procedures.

Price based on 6 pages

Copyright International Organization for Standardization
Provided by IHS under license with ISO
No reproduction or networking permitted without license from IHS

Not for Resale