INTERNATIONAL STANDARD ISO 8860-1 : 1987
TECHNICAL CORRIGENDUM 1

Published 1990-11-15

INTERNATIONAL ORGANIZATION FOR STANDARDIZATION • МЕЖДУНАРОДНАЯ ОРГАНИЗАЦИЯ ПО СТАНДАРТИЗАЦИИ • ORGANISATION INTERNATIONALE DE NORMALISATION
INTERNATIONAL ELECTROTECHNICAL COMMISSION • МЕЖДУНАРОДНАЯ ЭЛЕКТРОТЕХНИЧЕСКАЯ КОМИССИЯ • COMMISSION ÉLECTROTECHNIQUE INTERNATIONALE

Information processing — Data interchange on 90 mm (3.5 in) flexible disk cartridges using modified frequency modulation recording at 7 958 ftprad on 80 tracks on each side —

Part 1:
Dimensional, physical and magnetic characteristics

TECHNICAL CORRIGENDUM 1

Traitement de l'information — Echange de données sur cartouches à disquette de 90 mm (3,5 in) *utilisant un enregistrement à modulation de fréquence modifiée (MFM) à* 7 958 ftprad *sur 80 pistes sur chaque face —*

Partie 1: Caractéristiques dimensionnelles, physiques et magnétiques

RECTIFICATIF TECHNIQUE 1

Technical corrigendum 1 to International Standard ISO 8860-1:1987 was prepared by ISO/IEC JTC 1, *Information technology.*

Page iv

Annexes

Add the following: "F Method for measuring overwrite ..... 23"

Page 3

Subclause 6.1.2

Delete "temperature: 10 to 60 °C (50 to 140 °F)" and insert "temperature: 10 °C to 51,5 °C (50 °F to 125 °F)"

Delete "relative humidity: 8 to 80 %" and insert "relative humidity: 20 % to 80 %"

UDC 681.327.63 **Ref. No. ISO 8860-1 : 1987/Cor.1 : 1990 (E)**

Descriptors: data processing, information interchange, data recording devices, magnetic disks, flexible disks, dimensions, physical properties, magnetic properties.

© ISO/IEC 1990

Copyright International Organization for Standardization
Provided by IHS under license with ISO
No reproduction or networking permitted without license from IHS
Not for Resale

ISO 8860-1 : 1987/Cor.1 : 1990 (E)

Page 8

Subclause 9.3.1.6

Delete the last four lines and insert the following: "shall be less than 150 % of the value of the same ratio for the Master Standard Flexible Disk Cartridge when measured in accordance with annex F."

Page 23

Annex F

Insert the following:

Annex F
(normative)

Method for measuring overwrite

F.1 Readings shall be taken with a frequency-selective voltmeter centred on 62,5 kHz with a bandwidth of 1 kHz to 5 kHz at 300 r/min, 125 kHz with a bandwidth of 3 kHz to 5 kHz at 600 r/min.

F.2 Insert the Reference FDC into the test drive, load the heads on Cylinder 00 and run the drive for at least 3 min.

F.3 Erase Track 00 on Side 0, then record at $1f$ for one revolution on Track 00 using the Test Recording Current.

NOTE – a.c. erasure is preferred but not mandatory.

F.4 Read back and note the signal amplitude averaged over an integral number of revolutions.

F.5 Overwrite with $2f$ for one revolution.

F.6 Read back and note the signal amplitude averaged over an integral number of revolutions.

F.7 The overwrite ratio is

$$\frac{\text{residual signal amplitude at } 1f \text{ after overwrite with } 2f}{\text{signal amplitude after first recording with } 1f}$$

F.8 The average of at least 5 such ratios, after correction by the calibration factor, shall not be greater than 0,05 for the test drive.

F.9 Repeat steps F.3 to F.8 for Side 1.

F.10 Repeat F.2 to F.7 for both sides of the cartridge under test.

F.11 For each side of the cartridge under test, the average of at least 5 such ratios shall be less than 150 % of that for the Master Standard Flexible Disk Cartridge.

Copyright International Organization for Standardization
Provided by IHS under license with ISO
No reproduction or networking permitted without license from IHS
Not for Resale

8860 PT 1-87 4851903 0066522 T

F-54-35

INTERNATIONAL STANDARD

ISO 8860-1

First edition
1987-07-01

INTERNATIONAL ORGANIZATION FOR STANDARDIZATION
ORGANISATION INTERNATIONALE DE NORMALISATION
МЕЖДУНАРОДНАЯ ОРГАНИЗАЦИЯ ПО СТАНДАРТИЗАЦИИ

Information processing — Data interchange on 90 mm (3.5 in) flexible disk cartridges using modified frequency modulation recording at 7 958 ftprad on 80 tracks on each side —

Part 1 :
Dimensional, physical and magnetic characteristics

Traitement de l'information — Échange de données sur cartouches à disquette de 90 mm (3,5 in) *utilisant un enregistrement à modulation de fréquence modifiée (MFM) à* 7 958 ftprad *sur 80 pistes sur chaque face —*

Partie 1 : Caractéristiques dimensionnelles, physiques et magnétiques

Reference number
ISO 8860-1 : 1987 (E)

Copyright International Organization for Standardization
Provided by IHS under license with ISO
No reproduction or networking permitted without license from IHS
Not for Resale

Foreword

ISO (the International Organization for Standardization) is a worldwide federation of national standards bodies (ISO member bodies). The work of preparing International Standards is normally carried out through ISO technical committees. Each member body interested in a subject for which a technical committee has been established has the right to be represented on that committee. International organizations, governmental and non-governmental, in liaison with ISO, also take part in the work.

Draft International Standards adopted by the technical committees are circulated to the member bodies for approval before their acceptance as International Standards by the ISO Council. They are approved in accordance with ISO procedures requiring at least 75 % approval by the member bodies voting.

International Standard ISO 8860-1 was prepared by Technical Committee ISO/TC 97, *Information processing systems.*

Users should note that all International Standards undergo revision from time to time and that any reference made herein to any other International Standard implies its latest edition, unless otherwise stated.

© International Organization for Standardization, 1987

Printed in Switzerland

Copyright International Organization for Standardization
Provided by IHS under license with ISO
No reproduction or networking permitted without license from IHS
Not for Resale

Contents

Page

0 Introduction 1

1 Scope and field of application 1

2 Conformance 1

3 References 1

4 Definitions 1

4.1 recording disk 1

4.2 hub 1

4.3 shutter 1

4.4 liner 1

4.5 case 1

4.6 Master Standard Reference Flexible Disk Cartridge 1

4.7 Secondary Standard Reference Flexible Disk Cartridge 1

4.8 Typical Field 2

4.9 Reference Field 2

4.10 Test Recording Current 2

4.11 Standard Reference Amplitudes (SRAs) 2

4.12 Average Signal Amplitude 2

4.13 in-contact 2

4.14 side 2

4.15 direction of rotation 2

4.16 index 2

4.17 formatting 2

4.18 initialization 2

5 General description 2

5.1 Figures 2

Copyright International Organization for Standardization
Provided by IHS under license with ISO
No reproduction or networking permitted without license from IHS
Not for Resale

5.2 Main elements 2

5.3 Description 2

6 General requirements 2

6.1 Environment and transportation 2

6.2 Materials 3

7 Dimensional characteristics 3

7.1 Case 3

7.2 Liner 5

7.3 Disk 5

7.4 Hub 5

7.5 Optional handling notches 6

7.6 Interface between cartridge and drive 6

7.7 Compliance 6

8 Physical characteristics 6

8.1 Inflammability 6

8.2 Coefficient of linear thermal expansion of the disk 6

8.3 Coefficient of linear hygroscopic expansion of the disk 6

8.4 Torque 6

9 Magnetic characteristics 7

9.1 Recording area 7

9.2 Track geometry 7

9.3 Functional testing 7

Annexes

A Test for compliance 14

B Measurement of light transmittance 16

C Method for measuring the effective track width 18

D Cartridge distortion test gauge 19

E Method for measuring peak shift 20

Copyright International Organization for Standardization
Provided by IHS under license with ISO
No reproduction or networking permitted without license from IHS

Not for Resale

Information processing — Data interchange on 90 mm (3.5 in) flexible disk cartridges using modified frequency modulation recording at 7 958 ftprad on 80 tracks on each side —

Part 1 :
Dimensional, physical and magnetic characteristics

0 Introduction

ISO 8860 specifies the characteristics of 90 mm (3.5 in) flexible disk cartridges recorded at 7 958 ftprad using modified frequency modulation (MFM) recording on 80 tracks on each side.

ISO 8860-2 specifies the track layout, the track format and the characteristics of the recorded signals.

ISO 8860-1 and ISO 8860-2, together with the labelling scheme specified in ISO 9293, provide for full data interchange between data processing systems.

1 Scope and field of application

This part of ISO 8860 specifies the dimensional, physical and magnetic characteristics of the cartridge, so as to provide physical interchangeability between data processing systems.

NOTE — Numeric values in the SI and/or Imperial measurements system in this part of ISO 8860 may have been rounded off and therefore are consistent with, but not exactly equal to, each other. Either system may be used, but the two should be neither intermixed nor reconverted. The original design was made using SI units.

2 Conformance

A 90 mm (3.5 in) flexible disk cartridge shall be in conformance with this part of ISO 8860 if it meets all mandatory requirements contained herein.

3 References

ISO 683-13, *Heat-treated steels, alloy steels and free-cutting steels —*
Part 13 : Wrought stainless steels.

ISO 8860-2, *Information processing — Data interchange on* 90 mm (3.5 in) *flexible disk cartridges using modified frequency modulation recording at* 7 958 ftprad *on* 80 *tracks on each side — Part 2 : Track format.*

ISO 9293, *Information processing — Volume and file structure of flexible disk cartridges for information interchange.*

4 Definitions

For the purpose of this International Standard the following definitions apply.

4.1 recording disk : A flexible disk which accepts and retains, on the specified side or sides, magnetic signals intended for input/output and storage purposes.

4.2 hub : A centring and referencing device attached to the centre of the disk which allows torque to be transmitted to the disk. It ensures centring of the disk on the drive shaft in a unique angular position.

4.3 shutter : A device which uncovers the head windows upon insertion, and automatically covers them upon removal from the drive.

4.4 liner : Suitable material positioned between the case and the disk to provide cleaning action and protection from abrasion.

4.5 case : A protective enclosure including a shutter mechanism and a write-inhibit hole.

4.6 Master Standard Reference Flexible Disk Cartridge : A reference flexible disk cartridge selected as the standard for reference fields, signal amplitudes, resolution, peak shift and overwrite. Track 00 and track 79 on both sides are declared as reference tracks.

The reference tracks are calibrated at 600 r/min. The calibration is also valid at 300 r/min.

NOTE — This master standard has been established by the Physikalisch-Technische Bundesanstalt (PTB), Bundesallee 100, D-3300 Braunschweig, Germany, F.R.

4.7 Secondary Standard Reference Flexible Disk Cartridge : A flexible disk cartridge the performance of which is known and stated in relation to that of the Master Standard Reference Flexible Disk Cartridge.

NOTE — Secondary Standard Reference Flexible Disk Cartridges can be ordered from PTB Lab. 1.41 under Part Number RM 8860 as long as available. It is intended that these be used for calibrating further cartridges for use in routine calibration.

Copyright International Organization for Standardization
Provided by IHS under license with ISO
No reproduction or networking permitted without license from IHS
Not for Resale

4.8 Typical Field : In the plot of average signal amplitude against recording field at the specified track and flux transition density, the Typical Field is the minimum field which causes a signal output equal to 95 % of the maximum Average Signal Amplitude.

4.9 Reference Field : The typical field of the Master Standard Reference Flexible Disk Cartridge.

There are two Reference Fields, one for each side.

4.10 Test Recording Current : The current between 148 % and 152 % of the current which produces the Reference Field at test frequency $1f$ on track 00.

There are two Test Recording Currents, one for each side.

4.11 Standard Reference Amplitudes (SRAs) : The Average Signal Amplitudes derived from the reference tracks of the Master Standard Reference Flexible Disk Cartridge using the Test Recording Current.

There are four SRAs, two for each side.

SRA_{1f} is the Average Signal Amplitude from a recording written using Test Frequency $1f$ at Track 00.

SRA_{2f} is the Average Signal Amplitude from a recording written using Test Frequency $2f$ at Track 79.

4.12 Average Signal Amplitude : For a track : the arithmetically averaged value of the output voltages measured peak-to-peak over the whole track.

4.13 in-contact : An operating condition in which the magnetic surface of the disk is in physical contact with the magnetic heads.

4.14 side : Side 0 is the side engaged by the spindle. Side 1 is the opposite side.

4.15 direction of rotation : The direction of rotation shall be counter-clockwise when looking at Side 0.

4.16 index : The point on a track which determines the beginning and the end of the track.

4.17 formatting : Writing the proper control information, establishing the physical cylinders and the addresses of physical records on the surfaces of the flexible disk.

4.18 initialization : Writing any information initially required to be on the flexible disk cartridge, for example the Volume Label, prior to the commencement of general processing use.

5 General description

5.1 Figures

In figures 1 to 5 :

- Figure 1 shows Side 0 and enlarged cross-sections through the location holes;
- Figure 2 shows Side 1;
- Figure 3 shows at a larger scale the upper part of Side 0 without shutter;
- Figure 4 shows the disk with hub;
- Figure 5 shows the interface between the cartridge and the drive.

5.2 Main elements

The main elements of the flexible disk cartridge are

- the recording disk;
- the liner,
- the case.

5.3 Description

The cartridge is of a substantially square form. It includes a central hole on one side, a heat window on both sides and a write-inhibit hole.

The liner is provided between the case and the disk. It comprises two layers of material between which the disk lies.

The disk has a central hole with a metal hub attached.

6 General requirements

6.1 Environment and transportation

6.1.1 Testing environment

Tests and measurements made on the cartridge to check the requirements of this International Standard shall be carried out under the following conditions :

temperature : 23 ± 2 °C (73 ± 4 °F)

relative humidity : 40 to 60 %

conditioning before testing : 24 h minimum

For the tests specified in 9.3 the temperature and relative humidity shall be measured in the air immediately surrounding the cartridge drive. For all other tests the temperature and relative humidity shall be measured in the air immediately surrounding the cartridge.

Copyright International Organization for Standardization
Provided by IHS under license with ISO
No reproduction or networking permitted without license from IHS Not for Resale

The stray magnetic field at any point on the disk surface, including that resulting from the concentrating effect of the recording head, shall not exceed 4 000 A/m (50 Oe).

6.1.2 Operating environment

Cartridges used for data interchange shall be operated under the following conditions :

temperature : 10 to 60 °C (50 to 140 °F)

relative humidity : 8 to 80 %

wet bulb temperature : less than 29 °C (85 °F)

The temperature and relative humidity shall be measured in the air immediately surrounding the cartridge. It is recommended that the rate of change of the temperature should not exceed 20 °C (36 °F) per hour.

NOTE — For reliable interchange, it is recommended that the temperature and relative humidity conditions when reading are not the opposite extreme to the conditions when writing.

There shall be no deposit of moisture on or in the cartridge.

The stray magnetic field at any point on the disk surface, including that resulting from the concentrating effect of the recording head, shall not exceed 4 000 A/m (50 Oe).

6.1.3 Storage environment

During storage the cartridges shall be kept under the following conditions :

temperature : 4 to 53 °C (39 to 127 °F)

relative humidity : 8 to 90 %

There shall be no deposit of moisture on or in the cartridge.

The ambient stray magnetic field shall not exceed 4 000 A/m (50 Oe).

NOTE — Cartridges which have been stored at temperatures and humidities exceeding the operating conditions may exhibit degraded performance characteristics. Such cartridges should be subjected to a conditioning period of not less than 24 h within the operating environment prior to use.

6.1.4 Transportation

Responsibility for ensuring that adequate precautions are taken during transportation shall be with the sender. The cartridge shall be in a protective package free from dust or extraneous matter. It is recommended that a sufficient space exists between cartridge and outer surface of the final container, so that risk of erasure due to stray magnetic fields will be negligible.

It is recommended that the following conditions should not be exceeded :

temperature : −40 to 60 °C (−40 to 140 °F)

maximum rate of temperature change : 20 °C (36 °F) per hour

relative humidity : 8 to 90 %

There should be no deposit of moisture on or in the cartridge.

6.2 Materials

6.2.1 Case

The case, which may be constructed from any suitable material, shall comply with the requirements of annex A.

6.2.2 Liner

The material of the liner shall be able to retain dust or debris without damage to the disk.

6.2.3 Disk

The disk shall be constructed from any suitable material (for example bi-axially oriented polyethylene terephthalate) coated with a flexible layer of magnetic material.

6.2.4 Hub

The hub shall be made from any suitable material (for example stainless steel alloy in compliance with ISO 683-13, type 8).

7 Dimensional characteristics

The dimensions of the cartridge are referred to two reference axes X and Y, i.e. two lines in space intersecting at right angles. The plane they define is the Reference Plane XY of the cartridge.

7.1 Case

7.1.1 Shape (see figure 1)

The case shall be of rectangular form, its sides shall be

$l_1 = 94,0 \pm 0,3$ mm (3.700 ± 0.012 in)

$l_2 = 90,0 \,^{+0,4}_{-0,1}$ mm $\left(3.540 \,^{+0.016}_{-0.004}\right.$ in$\left.\right)$

The radius of three of its corners shall be

$r_1 = 2,0 \pm 1,0$ mm (0.079 ± 0.040 in)

The angle of its fourth corner shall be

$\omega = 45° \pm 2°$

7.1.2 Thickness (see figure 2)

In the area extending 8,5 mm (0.335 in) from each of the two edges as shown in figure 2, the thickness of the case shall be

$e_1 = 3,3 \pm 0,2$ mm (0.130 ± 0.008 in)

Copyright International Organization for Standardization
Provided by IHS under license with ISO
No reproduction or networking permitted without license from IHS
Not for Resale

When the cartridge is inserted in the test gauge specified in annex D, a force not exceeding 0,2 N (0.69 ozf), applied to the centre of the back edge shall cause the cartridge to pass through the gauge.

The edge radius shall be

r_2 = 0,40 ± 0,25 mm (0.150 ± 0.010 in)

7.1.3 Hub access hole (see figure 1)

On Side 0 there shall be a hub access hole the diameter of which shall be

d_1 = 26,50 mm min. (1.043 in min.)

The position of the centre of this hole shall be defined by

l_3 = 40,00 ± 0,15 mm (1.575 ± 0.006 in)

l_4 = 31,00 ± 0,15 mm (1.220 ± 0.006 in)

7.1.4 Locating holes (see figures 1 and 3)

7.1.4.1 Primary locating hole

The centre of the primary locating hole shall be at the intersection of Reference Axes X and Y.

Its diameter shall be

d_2 = 3,6 ± 0,1 mm (0.142 ± 0.004 in)

The dimensions of its section (see cross-section A-A in figure 1) shall be

d_3 = 1,5 mm min. (0.059 in min.)

l_8 = 0,2 ± 0,1 mm (0.010 ± 0.004 in)

l_9 = 1,0 mm min. (0.039 in min.)

l_{10} = 2,5 mm min. (0.098 in min.)

7.1.4.2 Secondary locating hole

The centre of the secondary locating hole shall be on Reference Axis X, its distance from Reference Axis Y shall be

l_5 = 80,0 ± 0,2 mm (3.150 ± 0.008 in)

It shall have a substantially rectangular shape. Its short axis shall be (cross-section B-B in figure 1)

l_6 = 3,6 ± 0,1 mm (0.142 ± 0.004 in)

Its long axis shall be

l_7 = 4,4 ± 0,2 mm (0.173 ± 0.008 in)

The dimensions d_3, l_8, l_9 and l_{10} of the cross-section of the secondary locating hole are as specified in 7.1.4.1.

7.1.5 Label area

7.1.5.1 Side 0 (see figure 1)

The locations and dimensions of the label area of Side 0 shall be

l_{11} = 3,5 mm min. (0.138 in min.)

l_{12} = 76,5 mm max. (3.012 in max.)

l_{14} = 60,0 mm min. (2.362 in min.)

7.1.5.2 Side 1 (see figure 2)

The locations and dimensions of the label area of Side 1 shall be

l_{11} = 3,5 mm min. (0.138 in min.)

l_{12} = 76,5 mm max. (3.012 in max.)

l_{13} = 20,0 mm min. (0.787 in min.)

7.1.6 Head windows (see figure 3)

The locations and the dimensions of the two head windows are specified by the same set of dimensions.

7.1.6.1 Location

The location of the head windows shall be defined by

l_{15} = 12,3 mm min. (0.485 in min.)

l_{16} = 11,5 mm min. (0.45 in min.)

l_{17} = 35,5 ± 0,2 mm (1.400 ± 0.008 in)

7.1.6.2 Dimensions

The width of the head windows shall be

l_{18} = 9,00 ± 0,20 mm (0.354 ± 0.008 in)

The radius of their corners shall be

r_3 = 0,5 ± 0,1 mm (0.020 ± 0.004 in)

The radius of their upper edge shall be

r_4 = 8,85 mm min. (0.348 in min.)

7.1.7 Write-inhibit hole (see figure 2)

7.1.7.1 Location

The centre of the write-inhibit hole shall be on Reference Axis Y. Its distance from Reference Axis X shall be

l_{19} = 67,75 ± 0,25 mm (2.667 ± 0.010 in)

Copyright International Organization for Standardization
Provided by IHS under license with ISO
No reproduction or networking permitted without license from IHS

Not for Resale

7.1.7.2 Dimensions

The dimensions of the write-inhibit hole shall be

l_{20} = 3,5 mm min. (0.138 in min.)

l_{21} = 4,0 mm min. (0.157 in min.)

7.1.7.3 Use

The write-inhibit hole is intended for use either with a mechanical switch or with an optical detector so that only when the hole is covered is writing on the disk possible. When covered, the closure device shall not extend outside the Reference Plane nor shall it deflect by more than 0,3 mm (0.012 in) from the Reference Plane inside the case under the action of a force of 3 N (0.67 lbf).

Also when covered, the light transmittance of the write-inhibit hole area shall not exceed 1 %, when measured with an optical system as described in annex B.

7.1.8 Profile of the shutter edge of the case (see figures 1 and 3)

The edge on which the shutter is mounted shall have a profile defined by the following dimensions :

l_{22} = 80,0 ± 0,2 mm (3.150 ± 0.008 in)

l_{23} = 76,0 ± 0,3 mm (2.990 ± 0.012 in)

l_{24} = 68,0 ± 0,3 mm (2.680 ± 0.012 in)

l_{25} = 64,50 ± 0,35 mm (2.540 ± 0.014 in)

l_{26} = 57,00 ± 0,35 mm (2.240 ± 0.014 in)

l_{27} = 55,5 ± 0,6 mm (2.180 ± 0.025 in)

l_{28} = 3,5 mm min. (0.137 in min.)

l_{29} = 17,5 ± 0,2 mm (0.690 ± 0.008 in)

l_{30} = 17,00 ± 0,15 mm (0.669 ± 0.006 in)

l_{31} = 15,50 ± 0,25 mm (0.61 ± 0.010 in)

l_{45} = 12,50 ± 0,25 mm (0.492 ± 0.010 in)

α = 45° ± 2°

β = 135° ± 2°

ω = 45° ± 2°

7.1.9 Shutter (see figures 2 and 3)

The shutter shall slide upon insertion of the cartridge into the drive so as to uncover the head windows, and close automatically upon removal. The maximum resistance force at the fully open position shall be 1 N, and the minimum resistance force at the fully closed position shall be 0,2 N.

The path along which the shutter can slide is defined by l_{25} and l_{28}.

In the open position of the shutter, the distance from its leading edge to Reference Axis Y shall be

l_{32} = 53,75 ± 1,25 mm (2.116 ± 0.050 in)

The width of the windows of the shutter shall be

l_{33} = 12,0 ± 0,2 mm (0.472 ± 0.008 in)

NOTE — It is a requirement that the drive shall provide a mechanism whereby correct insertion of the cartridge into the drive causes the shutter to slide so as to uncover the head windows.

7.2 Liner

No part of the liner shall protrude by more than 0,2 mm (0.008 in) into the head access windows.

7.3 Disk (see figure 4)

7.3.1 Diameter

The diameter of the disk shall be

d_4 = 85,8 ± 0,2 mm (3.378 ± 0.008 in)

7.3.2 Thickness

The thickness of the disk shall be

e_2 = 0,080 ± 0,008 mm (0.003 1 ± 0.000 3 in)

7.4 Hub (see figure 4)

The hub shall have a central part and a flange.

7.4.1 Dimensions

The diameter of the central part shall be

$$d_5 = 25{,}00\ ^{+0{,}00}_{-0{,}15}\ \text{mm}\ \left(0.984\ ^{+0.000}_{-0.006}\ \text{in}\right)$$

The diameter of the flange shall be

d_6 = 31,15 mm max. (1.226 in max.)

The distance from the surface of the central part of the hub to the surface of Side 0 of the disk shall be

l_{34} = 1,36 ± 0,10 mm (0.053 ± 0.004 in)

when measured at a radius r_7

r_7 = 14 mm nom. (0.55 in nom.)

7.4.2 Hub orientation holes (see figure 4)

The hub shall have two orientation holes. The first one at its centre, the second off-centre.

Copyright International Organization for Standardization
Provided by IHS under license with ISO
No reproduction or networking permitted without license from IHS
Not for Resale

7.4.2.1 First orientation hole

The first orientation hole shall have a square form defined by

l_{35} = 4,00 mm min. (0.15 in min.)

The position of the centre of rotation of the disk is defined by

l_{36} = 1,995 5 mm (0.078 56 in)

measured from two sides of the hole. This centre of rotation shall be within 0,5 mm (0.020 in) of the geometric centre of the disk.

The radius of the four corners of this hole shall be

r_5 = 1,0 ± 0,3 mm (0.040 ± 0.012 in)

7.4.2.2 Second orientation hole

The position and dimensions of the sides of the rectangular second orientation hole are referred to two radial lines A and B that are perpendicular to each other. Their positions shall be specified by

γ = 15° ± 3°

The length of the sides of this hole shall be

l_{37} = 8,0 ± 0,3 mm (0.315 ± 0.012 in)

l_{38} = 4,5 mm min. (0.177 in min.)

These sides shall be parallel to lines A and B, respectively, at a distance

l_{39} = 2,0 ± 0,2 mm (0.079 ± 0.008 in)

l_{40} = 10,00 ± 0,15 mm (0.393 ± 0.006 in)

The radius of one corner of this hole shall be

r_6 = 2,0 ± 0,1 mm (0.079 ± 0.004 in)

The radius of the three other corners shall be

r_5 = 1,0 ± 0,3 mm (0.040 ± 0.012 in)

7.5 Optional handling notches (see figures 1 and 2)

Two handling notches are permitted. If present they shall satisfy the following requirements.

Their centres shall be on a line parallel to, and above, Reference Axis X at a distance

l_{41} = 7,50 ± 0,15 mm (0.295 ± 0.006 in)

Their dimensions shall be

l_{42} = 3,0 mm min. (0.118 in min.)

l_{43} = 4,2 ± 0,2 mm (0.165 ± 0.008 in)

Their depth below the Reference Plane shall be

l_{44} = 2,0 mm min. (0.08 in min.)

7.6 Interface between cartridge and drive (see figure 5)

When the cartridge is inserted in the drive, the drive spindle shall engage the cartridge as shown in figure 5. The hub is held against the drive spindle by means of a magnetic attraction force. When in this position the distance between the hub surface on Side 0 and plane XY shall be

l_{46} = 0,3 mm nom. (0.012 in nom.)

The inside dimensions of the case on Side 1 shall be

e_3 = 1,3 ± 0,1 mm (0.051 ± 0.004 in)

with the exception of the annular zone defined by l_{47} and l_{48} where the thickness shall be

e_4 = 2,5 mm max. (0.098 in max.)

l_{47} shall be sufficiently large to ensure that the circumference of the disk shall not touch the inside edges of the case. The value of l_{47} specified below is a recommended value, therefore it is stated without tolerance.

l_{47} = 22,6 mm (0.890 in)

l_{48} = 21,7 ± 0,2 mm (0.854 ± 0.008 in)

7.7 Compliance

When the cartridge is constrained in the manner specified in annex A, the cartridge shall be in contact with posts P1 to P4.

8 Physical characteristics

8.1 Inflammability

The disk, case and liner components shall be made from materials that, if ignited from a match flame, do not continue to burn in a still carbon dioxide atmosphere.

8.2 Coefficient of linear thermal expansion of the disk

The coefficient of thermal expansion of the disk shall be

(17 ± 8) × 10^{-6} per degree Celsius

8.3 Coefficient of linear hygroscopic expansion of the disk

The coefficient of hygroscopic expansion of the disk shall be

(0 to 15) × 10^{-6} per percent of relative humidity

8.4 Torque

8.4.1 Starting torque

The starting torque, without the heads loaded, shall not exceed 0,006 N·m (0.85 ozf·in).

Copyright International Organization for Standardization
Provided by IHS under license with ISO
No reproduction or networking permitted without license from IHS

Not for Resale

8.4.2 Running torque without heads loaded

The torque necessary to turn the disk shall be in the range 0,000 5 N·m to 0,002 5 N·m (0.071 to 0.354 ozf·in) when the cartridge is in operation at a speed of 300 ± 3 r/min and 600 ± 6 r/min.

9 Magnetic characteristics

9.1 Recording area

On each side, the magnetic properties specified shall be uniform in the recording area which shall be the area limited by two radii :

42,0 mm min. (1.65 in min.)

20,6 mm max. (0.81 in max.)

9.2 Track geometry

9.2.1 Number of tracks

In the recording area there shall be 80 discrete concentric tracks on each side of the disk. The distance between centrelines of adjacent tracks shall be 0,187 5 mm (0.007 38 in).

The resulting track density is 5,33 tpmm (135.467 tpi).

9.2.2 Width of tracks

The width of a recorded track shall be

0,115 ± 0,008 mm (0.004 5 ± 0.000 3 in)

The method of measuring effective track width is given in annex C.

9.2.3 Track location

9.2.3.1 Nominal locations

The nominal radius (R_n) of the centrelines of all tracks shall be calculated by using the formula

$$R_n = X - 0{,}187\,5\,n$$

$$(R_n = X - 0.007\,38\,n)$$

where

n is the track number : n = 00 to 79.

X = 39,500 0 mm (1.555 1 in) for Side 0;

X = 38,000 0 mm (1.496 1 in) for Side 1.

9.2.3.2 Track location tolerance

For testing purposes, the centrelines of the recorded tracks shall be within ± 0,020 mm (± 0.000 8 in) of the nominal positions, when measured in the testing environment (see 6.1.1).

9.2.3.3 Line of access of the read/write heads

The line of access of the read/write heads is a line parallel to a radial line and spaced 0,35 mm (0.013 8 in) from it (see ISO 8860-2, sub-clause 4.3).

9.2.4 Track number

The track number shall be a two-digit decimal number (from 00 to 79 for each side) which identifies the tracks consecutively, starting at the outermost track (00).

9.3 Functional testing

For the purpose of the following tests the same drive unit shall be used for writing and reading operations, both for the disk under test and for the Master Standard Reference Flexible Disk Cartridge.

The in-contact condition shall be used.

9.3.1 Surface tests

The magnetic properties of both surfaces are defined by the testing requirements given below.

9.3.1.1 Test conditions

The disk shall be tested at 300 ± 3 r/min or 600 ± 6 r/min (see 5.6). The test frequencies [flux transitions per second, (ftps)] used shall be

At 300 r/min :

$1f$ = 125 000 ± 125 ftps

$2f$ = 250 000 ± 250 ftps

At 600 r/min :

$1f$ = 250 000 ± 250 ftps

$2f$ = 500 000 ± 500 ftps

The frequency(ies) to be used is specified for each test.

9.3.1.2 Typical field

The typical field of the disk under test shall be within ± 20 % of the Reference Field. It shall be measured using $1f$ on track 00 on both sides.

9.3.1.3 Average Signal Amplitude

When the disk under test has been recorded with the Test Recording Current, then read back and compared with the Master Standard Reference Flexible Disk Cartridge recorded under the same conditions, the Average Signal Amplitude shall be, on both sides

Track 00, using $1f$: less than 130 % of SRA_{1f},

Track 79, using $2f$: more than 80 % of SRA_{2f}.

Copyright International Organization for Standardization
Provided by IHS under license with ISO
No reproduction or networking permitted without license from IHS
Not for Resale

9.3.1.4 Resolution

After recording on track 79, using the Test Recording Current, the ratio

$$\frac{\text{Average Signal Amplitude using } 2f}{\text{Average Signal Amplitude using } 1f}$$

shall be greater than 80 % of the same ratio for the Master Standard Reference Flexible Disk Cartridge. This test shall be performed on both sides.

9.3.1.5 Peak shift

The average peak shift measured on the disk cartridge under test, using the method specified in annex E, shall be within the range from 63 % to 137 % of that of the Master Standard Reference Flexible Disk Cartridge.

This test shall be performed for both sides on track 79.

9.3.1.6 Overwrite

On track 00 after recording with the Test Recording Current, first using $1f$ for one revolution and then overwriting with $2f$ for one revolution, the ratio

$$\frac{\text{Residual Average Signal Amplitude at } 1f \text{ after overwrite using } 2f}{\text{Average Signal Amplitude after first recording using } 1f}$$

shall be less than 125 % of the value of the same ratio for the Master Standard Reference Flexible Disk Cartridge. This test shall be performed on both sides, and a frequency-selective voltmeter with a bandwidth of 1 kHz to 5 kHz shall be used.

9.3.1.7 Modulation

Modulation shall be

$$\frac{\text{Maximum mean} - \text{Minimum mean}}{\text{Maximum mean} + \text{Minimum mean}} \times 100\ \%$$

The maximum mean shall be the average value of the amplitude modulated output voltage in that part of the track with the maximum amplitudes; and the minimum mean shall be that in the respective part with the minimum amplitudes. Output voltage shall be measured peak-to-peak; averaging shall be done over about 2 000 consecutive flux transitions.

On both sides, on track 00 using $1f$ and on track 79 using $2f$, modulation shall be less than 10 %.

9.3.2 Track quality tests

These tests shall apply to all 80 tracks at the defined positions on each side. The Test Recording Current shall be used.

9.3.2.1 Missing pulse

Write a track at $2f$ with the appropriate Test Recording Current. Any playback signal which, when measured base-to-peak, is less than 45 % of half the arithmetically averaged value of the output voltages measured peak-to-peak over the whole track, shall be a missing pulse.

9.3.2.2 Extra pulse

Write a track at $2f$. Erase the track for one revolution with a direct current equivalent to the quiescent value of the Test Recording Current. Any playback signal which, when measured base-to-peak, exceeds 20 % of half the Average Signal Amplitude at $2f$ of the track under test shall be an extra pulse.

9.3.3 Rejection criterion

9.3.3.1 Defective track

A track on which one or more missing or extra pulses, or both, are detected in the same position(s) on consecutive passes shall be a defective track. The applicable number of consecutive passes shall be a matter for agreement between the interested parties.

9.3.3.2 Requirement for tracks

As initially received from the medium supplier, the cartridge shall have no defective tracks.

9.3.3.3 Rejected cartridge

A cartridge which does not meet the requirements of 9.3.3.2 shall be rejected.

Copyright International Organization for Standardization
Provided by IHS under license with ISO
No reproduction or networking permitted without license from IHS
Not for Resale

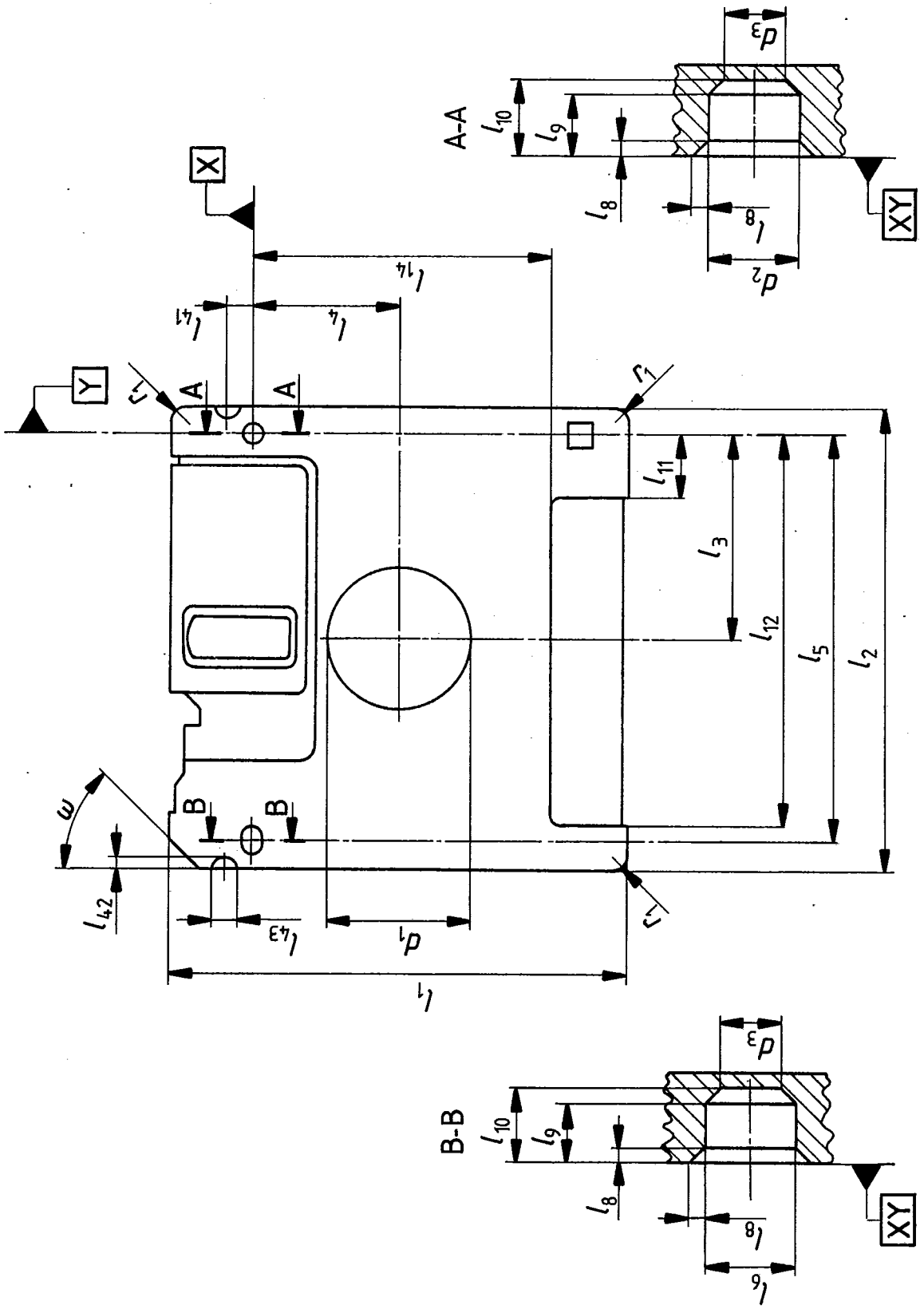

Figure 1 — Side 0

Copyright International Organization for Standardization
Provided by IHS under license with ISO
No reproduction or networking permitted without license from IHS
Not for Resale

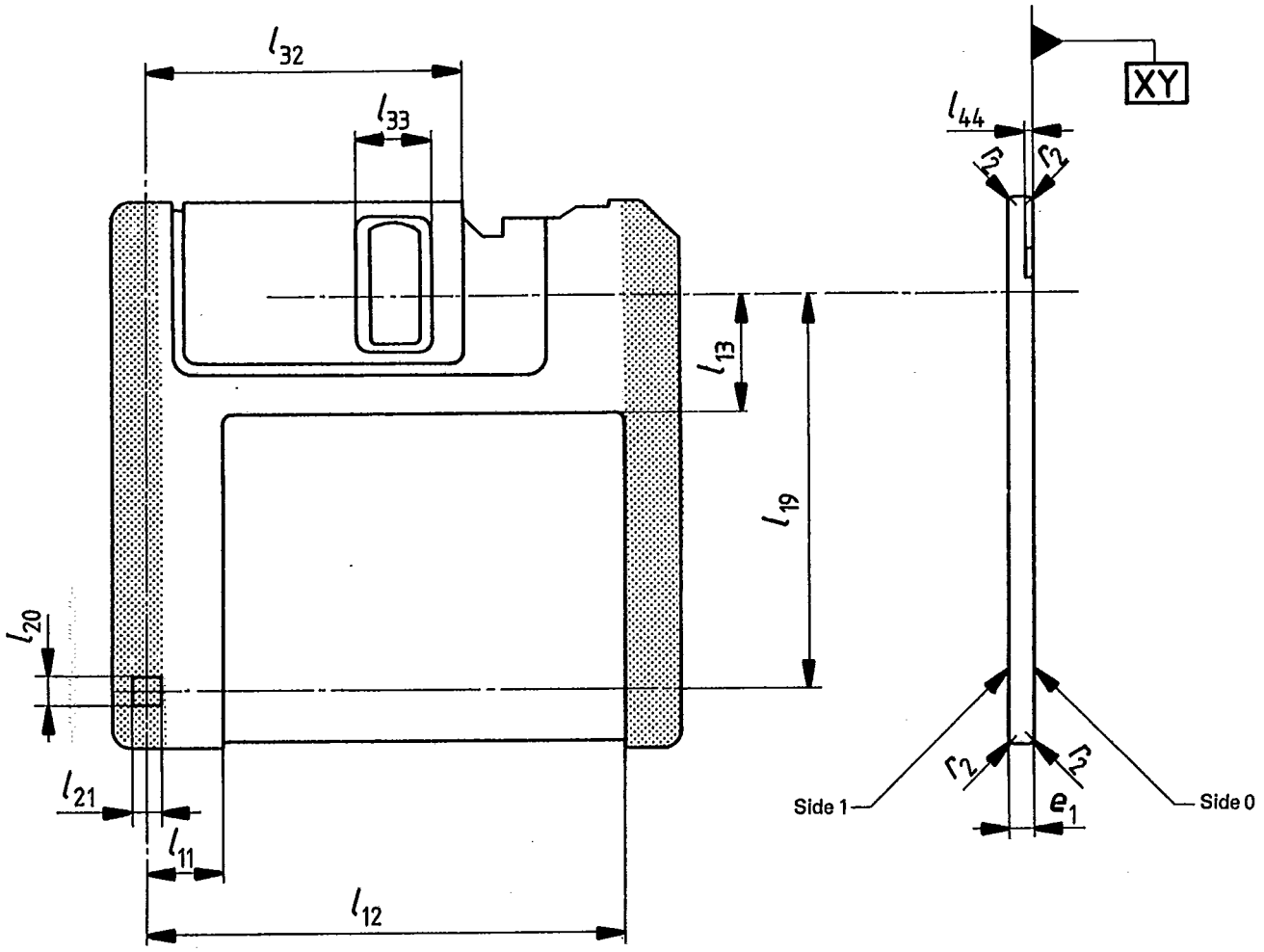

Figure 2 — Side 1

Copyright International Organization for Standardization
Provided by IHS under license with ISO
No reproduction or networking permitted without license from IHS
Not for Resale

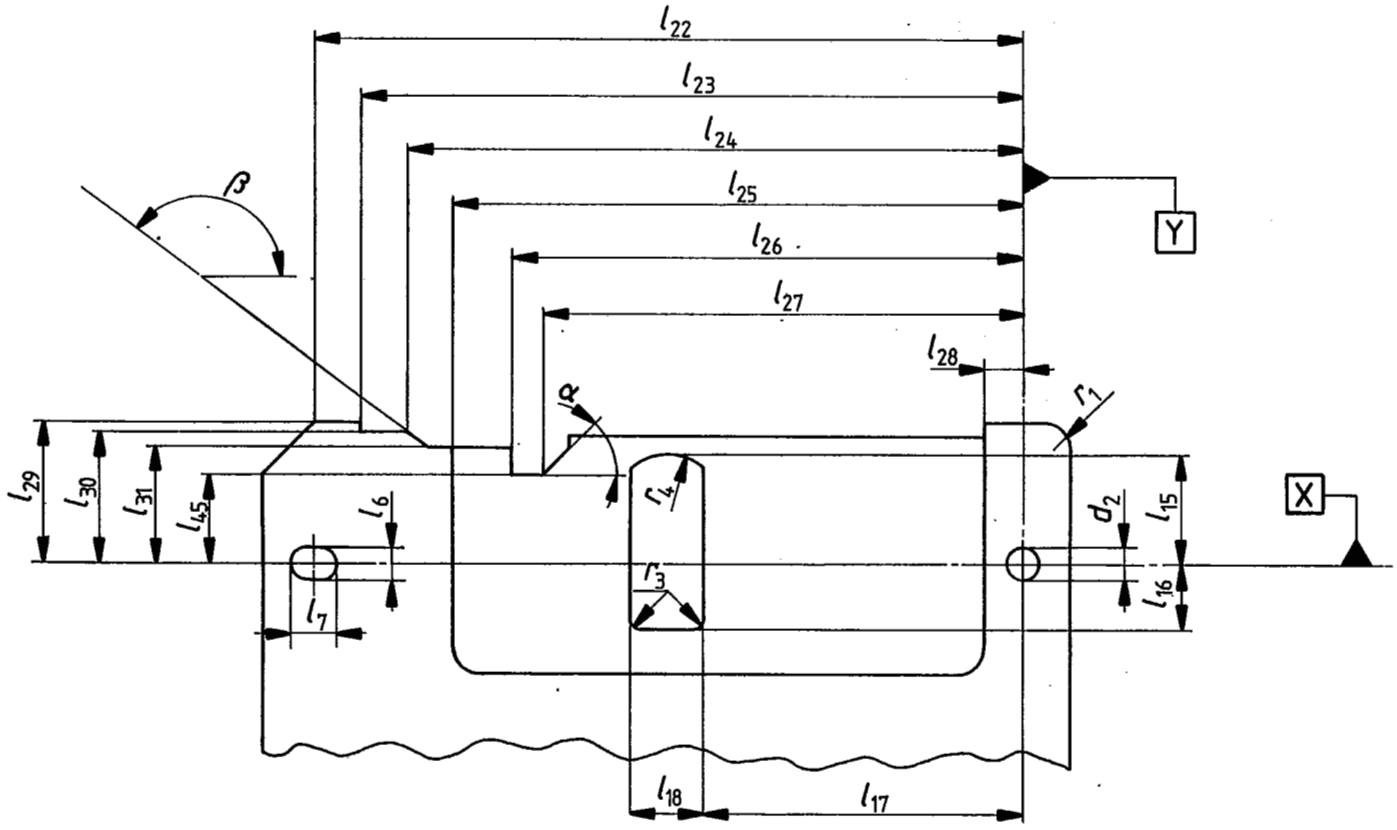

Figure 3 — Side 0

Copyright International Organization for Standardization
Provided by IHS under license with ISO
No reproduction or networking permitted without license from IHS
Not for Resale

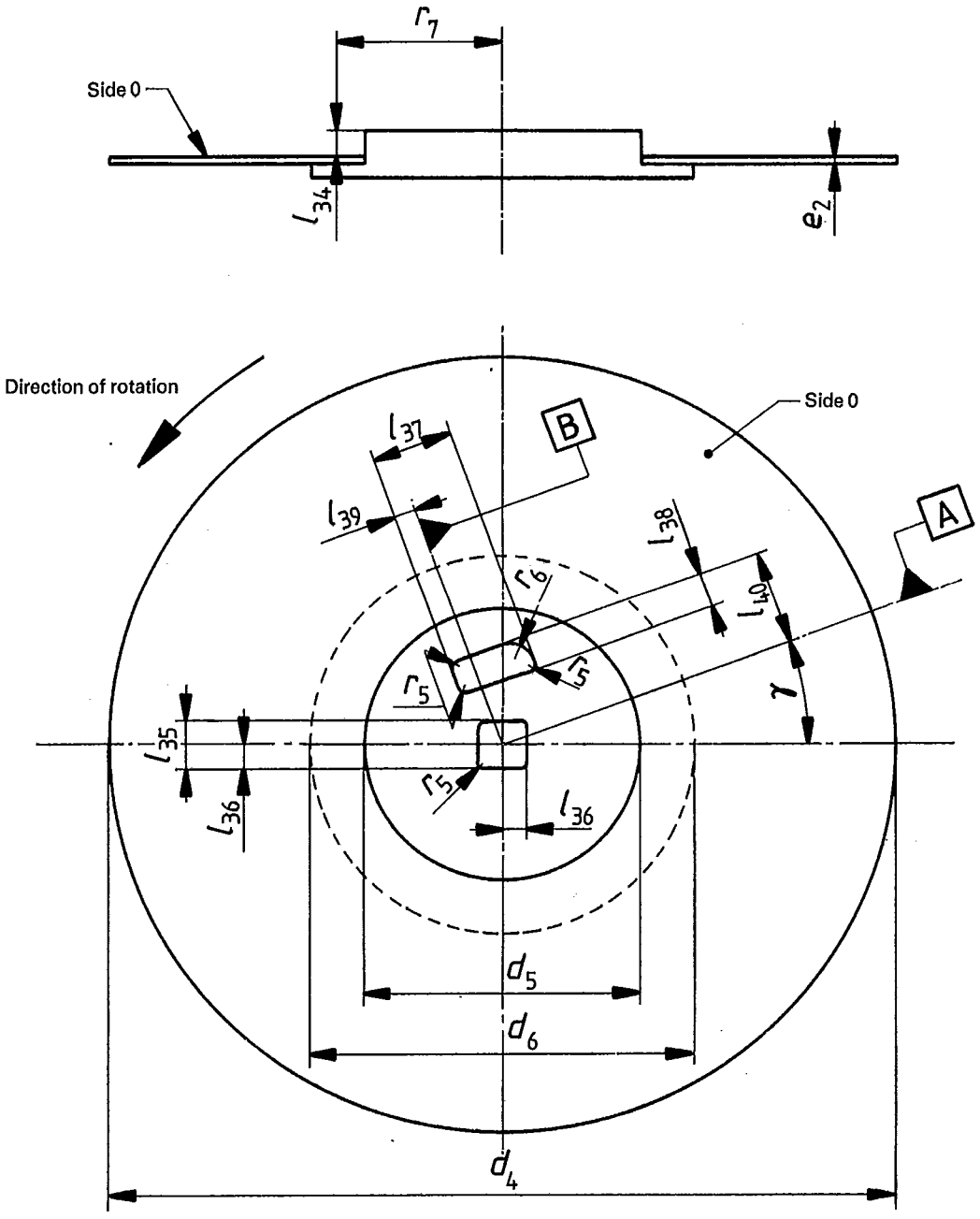

Figure 4 — Disk with hub

Copyright International Organization for Standardization
Provided by IHS under license with ISO
No reproduction or networking permitted without license from IHS
Not for Resale

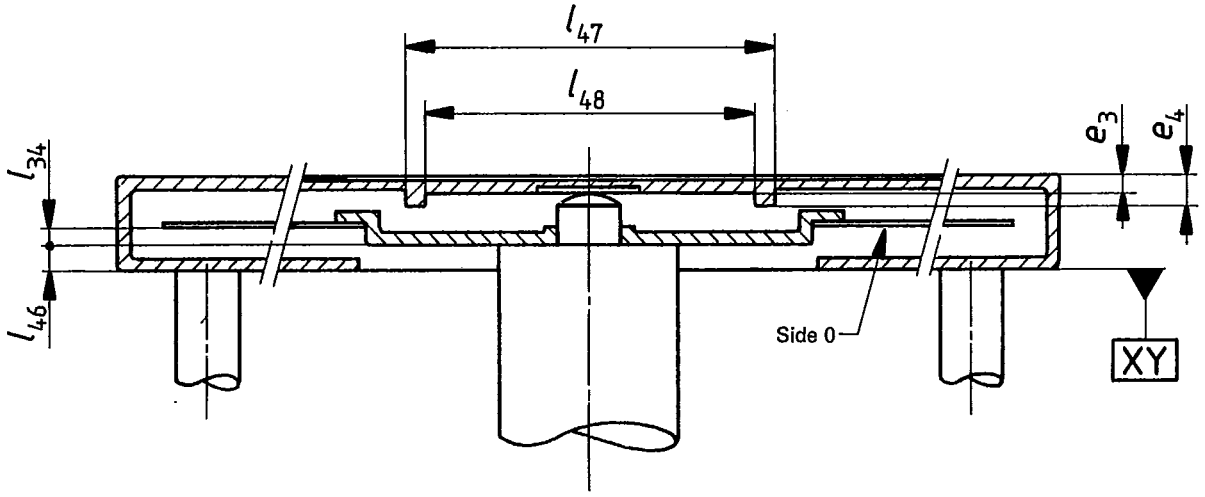

Figure 5 — Cartridge-Drive interface

Copyright International Organization for Standardization
Provided by IHS under license with ISO
No reproduction or networking permitted without license from IHS
Not for Resale

Annex A

Test for compliance

(This annex forms part of the standard.)

A.1 The purpose of this test is to determine whether the cartridge will maintain the proper plane of operation within the drive. This is achieved by supporting the cartridge at defined reference zones and applying forces opposite to the supports.

A.2 The location of the four zones a, b, c, d (see figure 6) is defined by

l_5 = 80,0 ± 0,2 mm (3.150 ± 0.008 in)

l_x = 62,0 ± 0,2 mm (2.440 ± 0.008 in)

Two of these zones, a and b, coincide with the primary and the secondary location holes, respectively.

A.3 The test device (see figure 7) consists of a plate on which four posts are fixed so as to correspond to the four zones a, b, c, and d. Posts P1 and P2 correspond to the zones a and b, respectively. Posts P3 and P4 correspond to zones c and d respectively. A fifth post (P5) is mounted in the middle of the plate and corresponds to the drive spindle.

The dimensions of these posts are as follows (see figure 8) :

Posts P1, P2

d_7 = 6,00 ± 0,01 mm (0.236 0 ± 0.000 4 in)
d_8 = 3,00 ± 0,01 mm (0.118 0 ± 0.000 4 in)
h_1 = 1,00 mm max. (0.040 in max.)
h_2 = 2,00 mm max. (0.080 in max.)

Posts P3, P4

d_{11} = 6,00 ± 0,01 mm (0.236 0 ± 0.000 4 in)

Post P5

d_9 = 12,70 ± 0,01 mm (0.500 0 ± 0.000 4 in)
d_{10} = 3,98 ± 0,01 mm (0.156 0 ± 0.000 4 in)
$h_3 = 2{,}20 \begin{smallmatrix} +\,0{,}03 \\ -\,0{,}00 \end{smallmatrix}$ mm ($0.086\,0 \begin{smallmatrix} +\,0.001\,2 \\ -\,0.000\,0 \end{smallmatrix}$ in)
R = 2,5 ±0,3 mm (0.10 ± 0.01 in)

A.4 Lay the cartridge on the four posts P1, P2, P3 and P4 and exert a vertical, downward force of 0,6 N (0.134 9 lbf) on each of the four zones.

Copyright International Organization for Standardization
Provided by IHS under license with ISO
No reproduction or networking permitted without license from IHS
Not for Resale

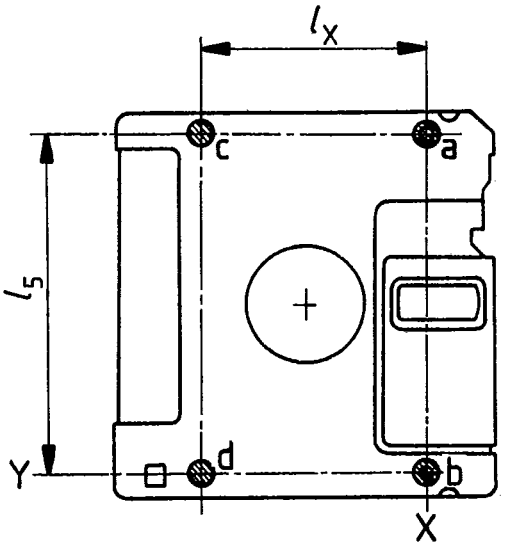

Figure 6 — Location of zones

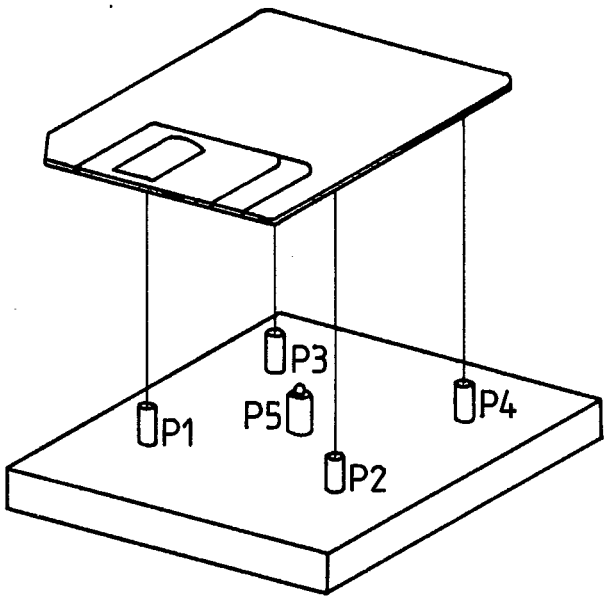

Figure 7 — Test device

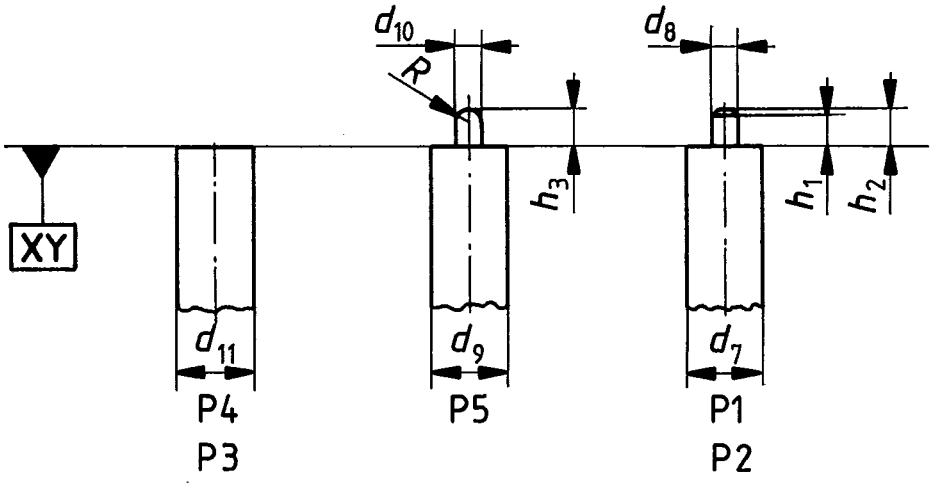

Figure 8 — Dimensions of posts

Copyright International Organization for Standardization
Provided by IHS under license with ISO
No reproduction or networking permitted without license from IHS
Not for Resale

Annex B

Measurement of light transmittance

(This annex forms part of the standard.)

B.1 Introduction

The following description outlines the general principle of the measuring equipment and the measuring method to be applied when measuring the radiation (light) transmittance of the write-inhibit hole and the opacity of its cover.

For the purpose of this part of ISO 8860 "light transmittance" is defined by convention as the relationship between the reading obtained from the test device with the sample inserted and the reading obtained when no sample is present. The transmittance value is expressed as the percentage ratio of the two readings.

The essential elements of the measuring equipment are

- the radiation source;
- the photo diode;
- the optical path;
- the measuring circuitry.

B.2 Description of the measuring equipment

B.2.1 Radiation source

AN infra red light-emitting diode (LED) with the following parameters shall be used :

- wavelength at peak emission : λ peak = 940 ± 10 nm
- half-power band width : b = ± 50 nm

B.2.2 Radiation receiver

A flat silicon photo diode shall be used as the radiation receiver. It shall be operated in the short circuit mode. The active area of the diode shall be equal to, or at the most 20 % larger than, the open area of the aperture. This condition guarantees a linear dependency of the short circuit diode current on the light intensity.

B.2.3 Optical path (see figure 9)

The optical axis of the arrangement shall be perpendicular to the case (Side 1).

The distance from the emitting surface of the LED to the case shall be

$$L_1 = \frac{3{,}5}{2 \tan\alpha}$$

where

3,5 mm is the minimum value of dimension l_{20} (see figure 2);

α is the angle where the relative intensity of the LED is equal to, or greater than, 95 % of the maximum intensity in the optical axis.

The aperture shall have a thickness of 1,2 to 1,4 mm and a diameter given by

$$D = (2L_2 \tan\alpha) \text{ mm}$$

$$L_2 = (L_1 + 1{,}5) \text{ mm}$$

Its surfaces shall be matt black. The whole device should be enclosed within a light-tight casing.

B.2.4 Measuring circuitry

Figure 10 shows the recommended circuitry with the following components :

E : regulated power supply with variable output voltage
R : current-limiting resistor
LED : light-emitting diode
D_i : Si photo diode
A : operational amplifier
R_{f0}, R_{f1}: feedback resistors
S : gain switch
V : voltmeter

The forward current of the LED and consequently its radiation power can be varied by means of the power supply E. D_i works in the short circuit mode. The output voltage of the operational amplifier is given by

$$V_0 = I_k \times R_f$$

and is therefore a linear function of the light intensity. I_k is the short circuit current of D_i.

R_{f0} and R_{f1} shall be low-temperature drift resistors with an accuracy of 1 %. The following ratio applies :

$$\frac{R_{f0}}{R_{f1}} = \frac{1}{50}$$

B.3 Measuring method

The measurements shall be taken with the case in a fixed position.

— S is set to position 0, with the write-inhibit hole open in front of the photo diode. The voltmeter is set to full-scale reading (100 % transmittance) by varying the output voltage of E.

— The write-inhibit hole is then covered. S is set to position 1. Full deflection of the voltmeter now represents 2 % transmittance.

Copyright International Organization for Standardization
Provided by IHS under license with ISO
No reproduction or networking permitted without license from IHS
Not for Resale

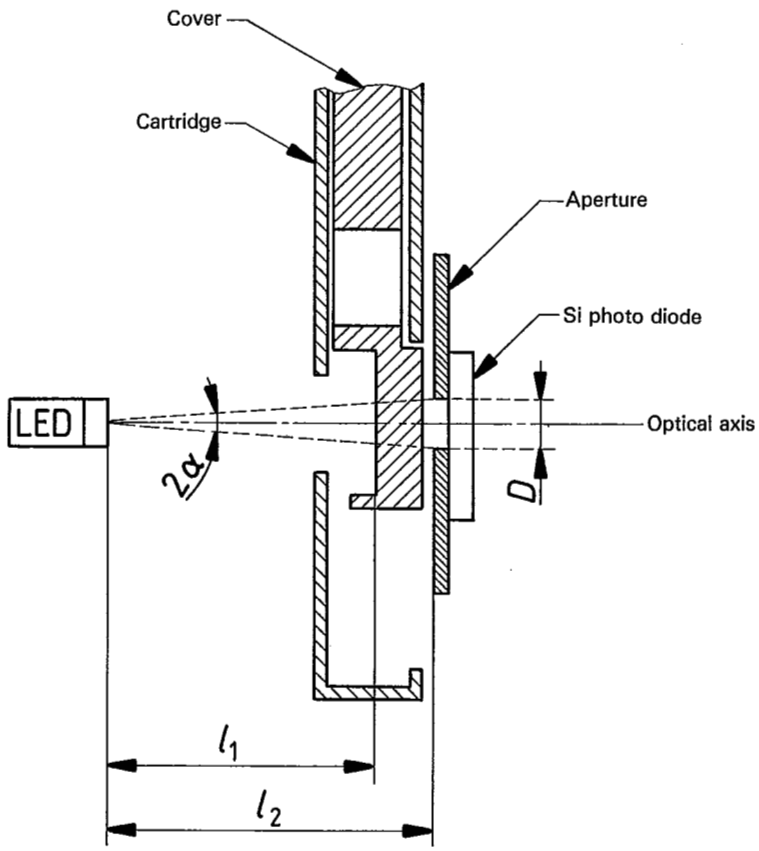

Figure 9 — Measuring device

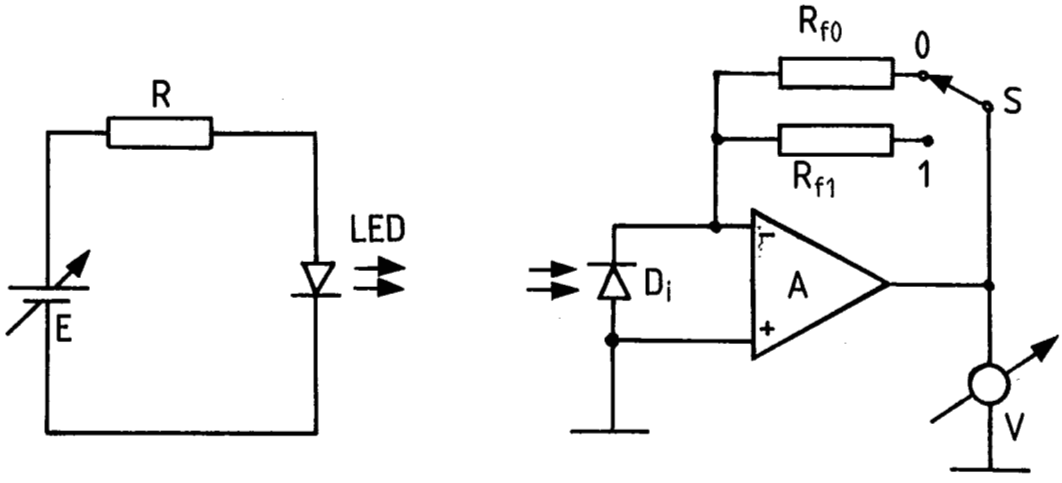

Figure 10 — Electronic circuitry

Copyright International Organization for Standardization
Provided by IHS under license with ISO
No reproduction or networking permitted without license from IHS
Not for Resale

Annex C

Method for measuring the effective track width

(This annex forms part of the standard.)

Erase a 7-track wide band. Record a 250 000 ftps frequency pattern in a track centred in the middle of the erased band, with the read/write head with the erase element active. Measure the output voltage.

Move the head radially over the disk in increments not greater than 0,010 mm (0.000 4 in) to the left and to the right until the read back signal has decreased by 75 %. Determine the read back signal amplitude for each incremental move and plot its amplitude versus displacement. See figure 11 for reading the half track width A and B for both sides of displacement, provided the gap width of the head used is not smaller than the effective track width. The total effective track width is the sum of A and B.

Repeat the test to ensure that no thermal or hygroscopic effects have taken place during the measurement.

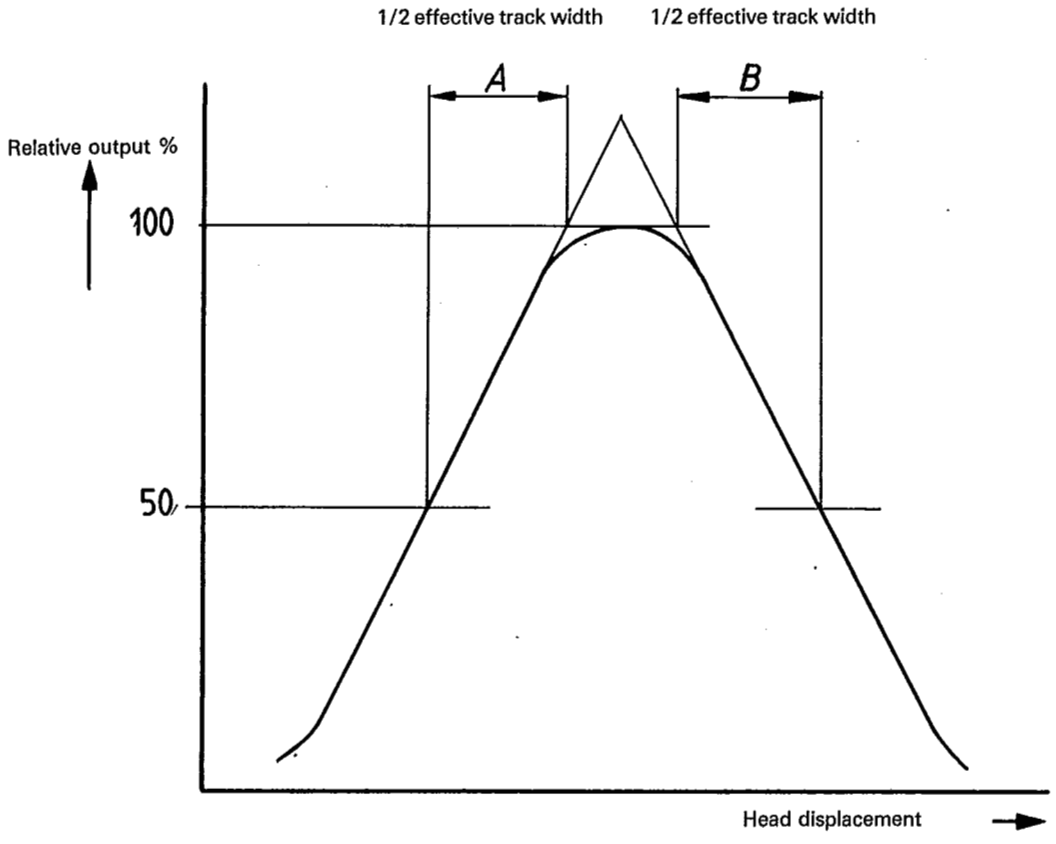

Figure 11 — Track width

Copyright International Organization for Standardization
Provided by IHS under license with ISO
No reproduction or networking permitted without license from IHS
Not for Resale

Annex D

Cartridge distortion test gauge

(This annex forms part of the standard.)

D.1 The gauge to be used is shown in figure 12.

D.2 The gauge shall be made of a suitable material, for example, chrome-plated carbon steel. The inner surfaces shall be polished to give a surface finish of 5 µm (200 µi) peak-to-peak.

D.3 Dimensions shall be as follows :

A = 96,0 mm min. (3.78 in min.)
B = 91,0 ± 0,1 mm (3.583 ± 0.004 in)
C = 8,50 ± 0,01 mm (0.334 6 ± 0.000 4 in)
D = 3,80 ± 0,01 mm (0.149 6 ± 0.000 4 in)
E = 4,20 ± 0,01 mm (0.165 4 ± 0.000 4 in)

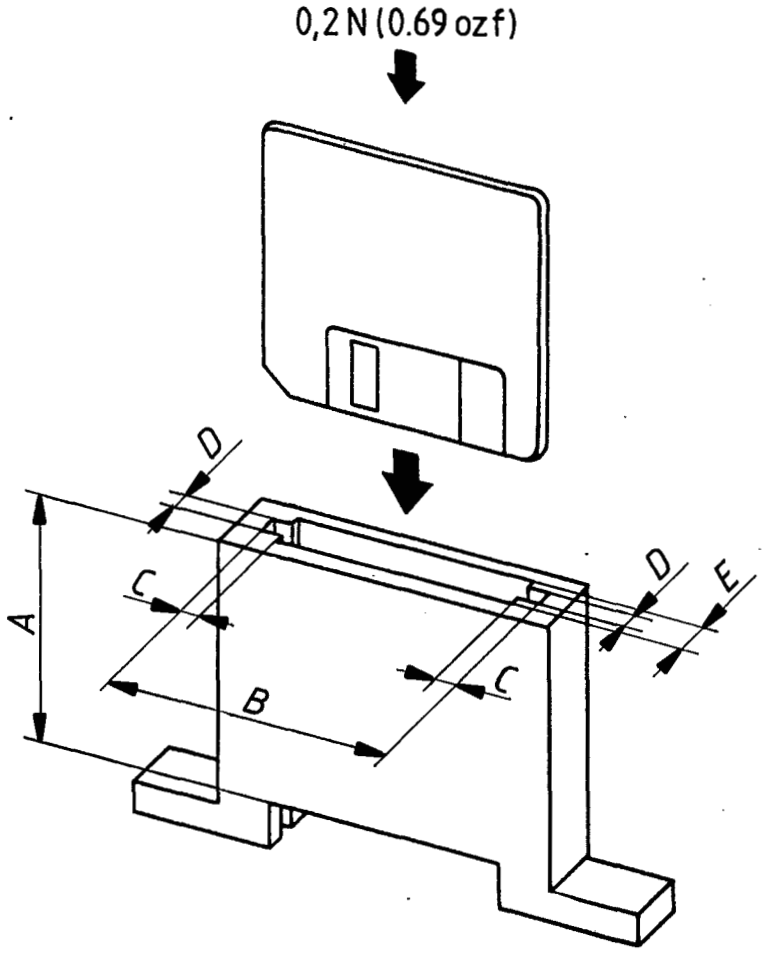

Figure 12 — Test gauge

Copyright International Organization for Standardization
Provided by IHS under license with ISO
No reproduction or networking permitted without license from IHS
Not for Resale

Annex E

Method for measuring peak shift

(This annex forms part of the standard.)

E.1 Introduction

The resolution of a flexible disk system at the inner tracks, where the recording density is highest, shall be sufficiently high to minimize peak shift. However, it shall not be too high at the outer tracks, where the recording density is lowest, otherwise spurious read signals may be generated.

This test determines the characteristics of the disk by measuring the peak shift at inner tracks and setting limits for the upper and lower values.

E.2 Description of the measuring equipment

E.2.1 Peak shift test drive

The drive shall be any drive suitable for use at 7 958 ftprad.

E.2.2 Peak shift measurement circuit

The measurement circuit shall be as shown in figure 13.

The operation of the circuit is illustrated in the timing diagram (see figure 14) as follows :

a) index pulse

b) index pulse timer

A 1 ms timer triggered by the index pulse. Its output masks the discontinuities that occur in the recording when the write current is switched off.

c) read signal

The read signal resulting from the test pattern. The positive-going edge of the first bit of a pair triggers the LS 74 flip-flop.

The negative-going edge of the first bit of a pair triggers the LS 221 timer.

d) bit period window

This is the output waveform of the LS 221 timer. It allows the positive-going edge of the second bit of a pair to reset flip-flop LS 74.

e) is the output of the LS 74; its duration is the time interval T' between the two bits of a pair.

f) sampling period

This period commences when the second LS 74 flip-flop is set by the trailing edge of d) after the index pulse timer has reset.

It is terminated by the trailing edge of the first output pulse of the LS 221 timer to occur during the period of the next index pulse timer.

g) output

Waveform e) is passed to the time interval counter during the sampling period.

E.2.3 Period of the LS 221 timer

The period of the LS 221 timer shall be

3 µs when testing at 600 r/min;

6 µs when testing at 300 r/min.

E.2.4 Time interval counter

The counter shall have a resolution of 5 ns or better.

E.3 Method of test

E.3.1 AC bulk-erase the disk cartridge under test.

E.3.2 Using the Test Recording Current, write the test pattern DB6 (110110110110...) continuously on track 79 on each side, commencing with the index pulse and switching off the write current when the index pulse is detected at the end of one revolution.

E.3.3 Read back on the same test drive and measure intervals T' on the time interval counter.

NOTE — To minimize errors due to changes in the rotational speed of the drive, it is essential that reading occurs immediately after writing.

E.3.4 Sampling method

E.3.4.1 The data recording area extends from the leading edge of the index pulse to the leading edge of the next index pulse.

E.3.4.2 The sampling area extends from the resetting of the index pulse timer to the leading edge of the next index pulse [resulting from E.2.2 b)].

E.3.4.3 The preferred sampling method is to measure every T' interval in the sampling area, if permitted by the sampling rate of the time interval counter. If the sampling rate of the counter prohibits the measurement of every T', then a lesser number of T' measurements shall be permitted, providing that the sampling is random.

Copyright International Organization for Standardization
Provided by IHS under license with ISO
No reproduction or networking permitted without license from IHS
Not for Resale

E.3.4.4 The minimum number of random samples shall be 1 000.

E.3.5 Asymmetry of the write waveform

To eliminate errors due to asymmetry of the write current waveform, repeat the operations described in E.3.1 to E.3.4 using the test pattern B6D (101101101101...).

The operations shall be repeated for both RM 8860 and the cartridge under test.

E.3.6 Repeat the operations described in E.3.1 to E.3.5 for an RM 8860.

E.4 Definition

$$\text{Peak shift} = \frac{\overline{T'} - T}{2}$$

where

$\overline{T'}$ is the mean period between pairs of bits in the read waveform (including the values obtained in E.3.6);

T is the period of the $2f$ pattern (2 µs at 600 r/min, 4 µs at 300 r/min);

PSt is the peak shift value for the disk under test;

PSs is the peak shift value for the RM 8860;

K_0 is the calibration factor for the RM 8860 relative to the Master Standard Reference Flexible Disk Cartridge.

The value of the peak shift of the disk under test, expressed as a percentage of that for the Master Standard Reference Flexible Disk Cartridge, shall be

$$\frac{\text{PSt}}{\text{PSs}} \times K_0 \,\%$$

Copyright International Organization for Standardization
Provided by IHS under license with ISO
No reproduction or networking permitted without license from IHS
Not for Resale

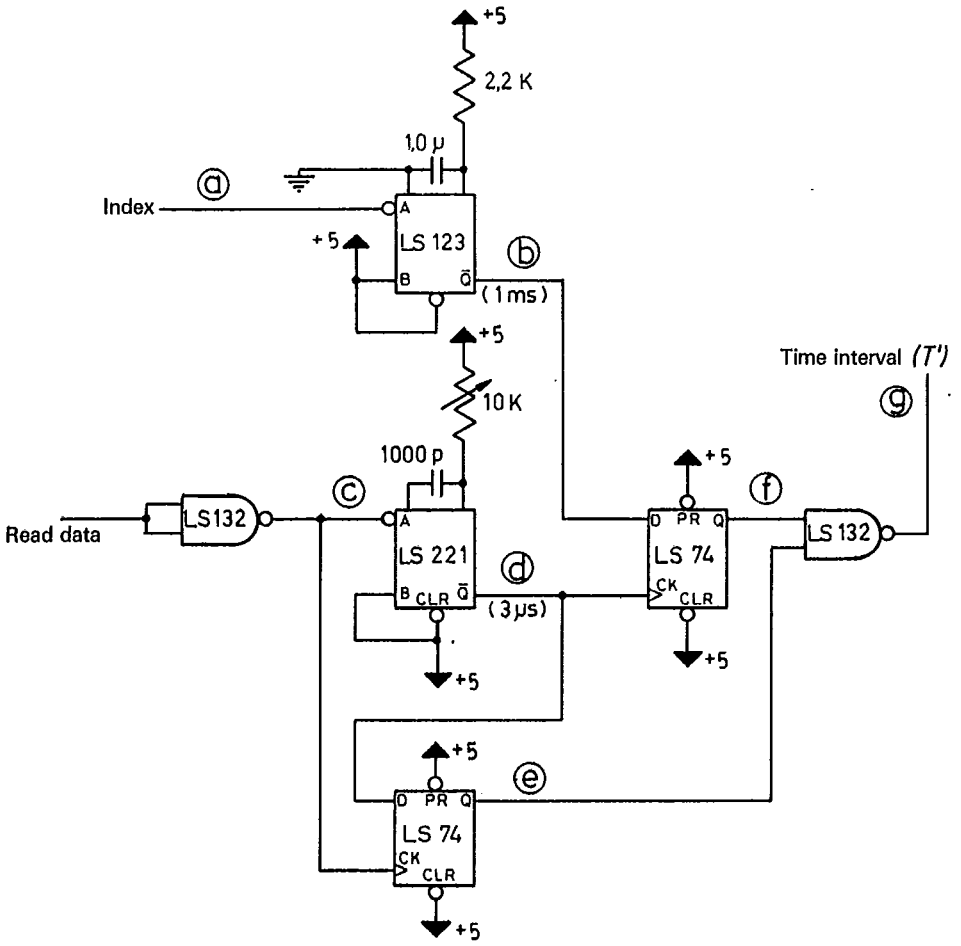

Figure 13 — Measurement circuit when testing at 600 r/min

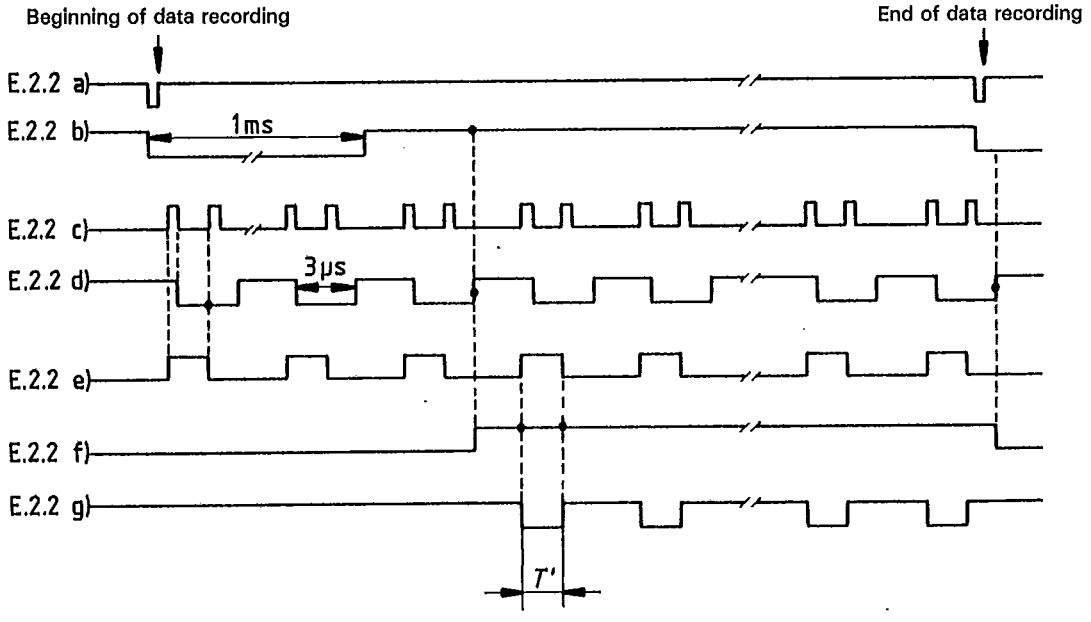

Figure 14 — Timing diagram when testing at 600 r/min

Copyright International Organization for Standardization
Provided by IHS under license with ISO
No reproduction or networking permitted without license from IHS
Not for Resale

UDC 681.327.63

Descriptors : data processing, information interchange, data recording devices, magnetic disks, flexible disks, dimensions, physical properties, magnetic properties.

Price based on 22 pages

Copyright International Organization for Standardization
Provided by IHS under license with ISO
No reproduction or networking permitted without license from IHS

Not for Resale