INTERNATIONAL STANDARD

ISO/IEC 7487-1

Second edition
1993-12-15

Information technology — Data interchange on 130 mm (5,25 in) flexible disk cartridges using modified frequency modulation recording at 7 958 ftprad, 1,9 tpmm (48 tpi), on both sides — ISO type 202 —

Part 1:
Dimensional, physical and magnetic characteristics

Technologies de l'information — Échange de données sur cartouches à disquettes de 130 mm (5,25 in) *utilisant un enregistrement à modulation de fréquence modifiée (MFM) à* 7 958 ftprad, 1,9 tpmm (48 tpi) *sur les deux faces — Type ISO 202 —*

Partie 1: Caractéristiques dimensionnelles, physiques et magnétiques

Reference number
ISO/IEC 7487-1:1993(E)

Copyright International Organization for Standardization
Provided by IHS under license with ISO
No reproduction or networking permitted without license from IHS

Not for Resale

Contents

Page

1 Scope 1

2 Conformance 1

3 Normative references 1

4 Definitions 1

5 General description 2

6 General requirements 5

7 Dimensional characteristics 6

8 Physical characteristics 8

9 Magnetic characteristics 9

Annexes

A Measurement of the cartridge thickness 13

B Measurement of light transmittance 15

C Method for measuring the effective track width 18

D Use of hub support rings 19

E Bibliography 20

© ISO/IEC 1993
All rights reserved. Unless otherwise specified, no part of this publication may be reproduced or utilized in any form or by any means, electronic or mechanical, including photocopying and microfilm, without permission in writing from the publisher.

ISO/IEC Copyright Office • Case Postale 56 • CH-1211 Genève 20 • Switzerland

Printed in Switzerland

Copyright International Organization for Standardization
Provided by IHS under license with ISO
No reproduction or networking permitted without license from IHS

Not for Resale

Foreword

ISO (the International Organization for Standardization) and IEC (the International Electrotechnical Commission) form the specialized system for worldwide standardization. National bodies that are members of ISO or IEC participate in the development of International Standards through technical committees established by the respective organization to deal with particular fields of technical activity. ISO and IEC technical committees collaborate in fields of mutual interest. Other international organizations, governmental and non-governmental, in liaison with ISO and IEC, also take part in the work.

In the field of information technology, ISO and IEC have established a joint technical committee, ISO/IEC JTC 1. Draft International Standards adopted by the joint technical committee are circulated to national bodies for voting. Publication as an International Standard requires approval by at least 75 % of the national bodies casting a vote.

International Standard ISO/IEC 7487-1 was prepared by Joint Technical Committee ISO/IEC JTC 1, *Information technology*, Subcommittee SC 11, *Flexible magnetic media for digital data interchange.*

This second edition cancels and replaces the first edition (ISO 7487-1:1985), of which it constitutes a technical revision.

ISO/IEC 7487 consists of the following parts, under the general title *Information technology — Data interchange on 130 mm (5,25 in) flexible disk cartridges using modified frequency modulation recording at 7 958 ftprad, 1,9 tpmm (48 tpi), on both sides — ISO type 202*:

— *Part 1: Dimensional, physical and magnetic characteristics*

— *Part 2: Track format A*

— *Part 3: Track format B*

Annexes A, B and C form an integral part of this part of ISO/IEC 7487. Annexes D and E are for information only.

Copyright International Organization for Standardization
Provided by IHS under license with ISO
No reproduction or networking permitted without license from IHS
Not for Resale

Introduction

ISO/IEC 7487 specifies the characteristics of 130 mm (5,25 in) flexible disk cartridges recorded at 7 958 ftprad, 1,9 tpmm (48 tpi), on both sides using modified frequency modulation recording.

ISO 7487-2 and ISO 7487-3 each specify the quality of recorded signals, the track layout, and a track format to be used on such a flexible disk cartridge, which is intended for data interchange between data processing systems.

Together with the labelling scheme specified in ISO 7665, ISO/IEC 7487-1 and ISO 7487-2 provide for a full data interchange between data processing systems.

Together with the labelling scheme specified in ISO 9293, ISO/IEC 7487-1 and ISO 7487-3 provide for another full data interchange between data processing systems.

In accordance with ISO/IEC 9983, flexible disk cartridges conforming to this part of ISO/IEC 7487 should be designated as "ISO type 202".

Copyright International Organization for Standardization
Provided by IHS under license with ISO
No reproduction or networking permitted without license from IHS
Not for Resale

Information technology — Data interchange on 130 mm (5,25 in) flexible disk cartridges using modified frequency modulation recording at 7 958 ftprad, 1,9 tpmm (48 tpi), on both sides — ISO type 202 —

Part 1:
Dimensional, physical and magnetic characteristics

1 Scope

This part of ISO/IEC 7487 specifies the dimensional, physical and magnetic characteristics of the cartridge so as to provide physical interchangeability between data processing systems.

2 Conformance

A flexible disk cartridge shall be in conformance with ISO 7487 when it meets all the requirements of ISO/IEC 7487-1 and those of either ISO 7487-2 or ISO 7487-3.

NOTE 1 Numeric values in the SI and/or Imperial measurement system in this International Standard may have been rounded off and therefore are consistent with, but not exactly equal to, each other. Either system may be used, but the two should be neither intermixed nor reconverted. The original design was made using Imperial units and further developments were made using SI units.

3 Normative references

The following standards contain provisions which, through reference in this text, constitute provisions of this part of ISO/IEC 7487. At the time of publication, the editions indicated were valid. All standards are subject to revision, and parties to agreements based on this part of ISO/IEC 7487 are encouraged to investigate the possibility of applying the most recent editions of the standards indicated below. Members of IEC and ISO maintain registers of currently valid International Standards.

ISO 7487-2:1985, *Information processing — Data interchange on 130 mm (5.25 in) flexible disk cartridges using modified frequency modulation recording at 7 958 ftprad, 1,9 tpmm (48 tpi), on both sides — Part 2: Track format A.*

ISO 7487-3:1986, *Information processing — Data interchange on 130 mm (5.25 in) flexible disk cartridges using modified frequency modulation recording at 7 958 ftprad, 1,9 tpmm (48 tpi), on both sides — Part 3: Track format B.*

ISO 7665:1983, *Information processing — File structure and labelling of flexible disk cartridges for information interchange.*

ISO 9293:1987, *Information processing — Volume and file structure of flexible disk cartridges for information interchange.*

4 Definitions

For the purposes of this part of ISO/IEC 7487, the following definitions apply.

4.1 flexible disk: A flexible disk which accepts and retains on the specified side or sides magnetic signals

Copyright International Organization for Standardization
Provided by IHS under license with ISO
No reproduction or networking permitted without license from IHS
Not for Resale

intended for input/output and storage purposes of information data processing and associated systems.

4.2 master standard reference flexible disk cartridge: A reference flexible disk cartridge selected as the standard for reference fields, signal amplitudes, resolution, and overwrite. Track 00 and Track 39 on each side are defined as reference tracks.

NOTE 2 The Master Standard has been established by the Physikalisch-Technische Bundesanstalt (PTB), Bundesallee 100, D-38023 Braunschweig, Germany.

4.3 secondary standard reference flexible disk cartridge: A flexible disk cartridge, the performance of which is known and stated in relation to that of the master standard reference flexible disk cartridge.

NOTE 3 Secondary standard reference flexible disk cartridges may be ordered from PTB Lab 1.41 under part number RM 7487, as long as available. It is intended that these be used for calibrating tertiary cartridges for use in routine calibrations.

4.4 typical field (for each side)**:** The minimum recording field, which, when applied to a flexible disk cartridge, causes a signal output equal to 95 % of the maximum average signal amplitude when taken as a function of the recording field at the specified track and flux transition frequency of that flexible disk cartridge.

4.5 reference field: The typical field of the signal amplitude reference flexible disk cartridge. There are two reference fields, one for each side.

4.6 test recording current (for each side)**:** The current between 145 % and 155 % of the current which produces the reference field at 125 000 flux transitions per second (ftps) on track 00 on both sides.

4.7 standard reference amplitude (SRA) (for each side)**:** The average signal amplitudes derived from the reference tracks of the master standard reference flexible disk cartridge using the appropriate test recording current.

SRA_1 is the average signal amplitude from a recording written using 125 000 ftps (f_1).

SRA_2 is the average signal amplitude from a recording written using 250 000 ftps (f_2).

4.8 average signal amplitude: The arithmetically averaged value for a track of the output voltages measured peak-to-peak over the whole track.

4.9 in-contact: An operating condition in which the magnetic surface of the disk intended for data storage is in physical contact with the magnetic heads.

4.10 formatting: Writing the proper control information, establishing the physical tracks, and designating the addresses of physical records on the flexible disk's surfaces.

4.11 initialization: Writing the volume label, the ERMAP label and other information initially required to be on the flexible disk cartridge prior to the commencement of general processing or use.

4.12 recording area: That area of each disk surface with which the head may come into contact.

5 General description

5.1 General figures

A typical flexible disk cartridge is represented in figures 1 and 2.

5.2 Main elements

The main elements of this flexible disk cartridge are:

— the disk;

— the liner;

— the jacket.

The cartridge is stored in an envelope.

5.3 Description

The jacket is of a square form. It includes a central window, an index window and a head window in both sides.

The liner is fixed to the inside of the jacket. It comprises two layers of material between which the disk is held. The liner has the same openings as the jacket.

The disk has only a central window and an index window.

5.4 Optional features

The interchange characteristics of the cartridge allow for variations in its construction, as follows:

— the jacket may include flaps (for example three flaps as shown in the figures, or none);

Copyright International Organization for Standardization
Provided by IHS under license with ISO
No reproduction or networking permitted without license from IHS
Not for Resale

— the jacket may include notches along the reference edge;

— the centre of the disk may be reinforced by hub support rings (see annex D).

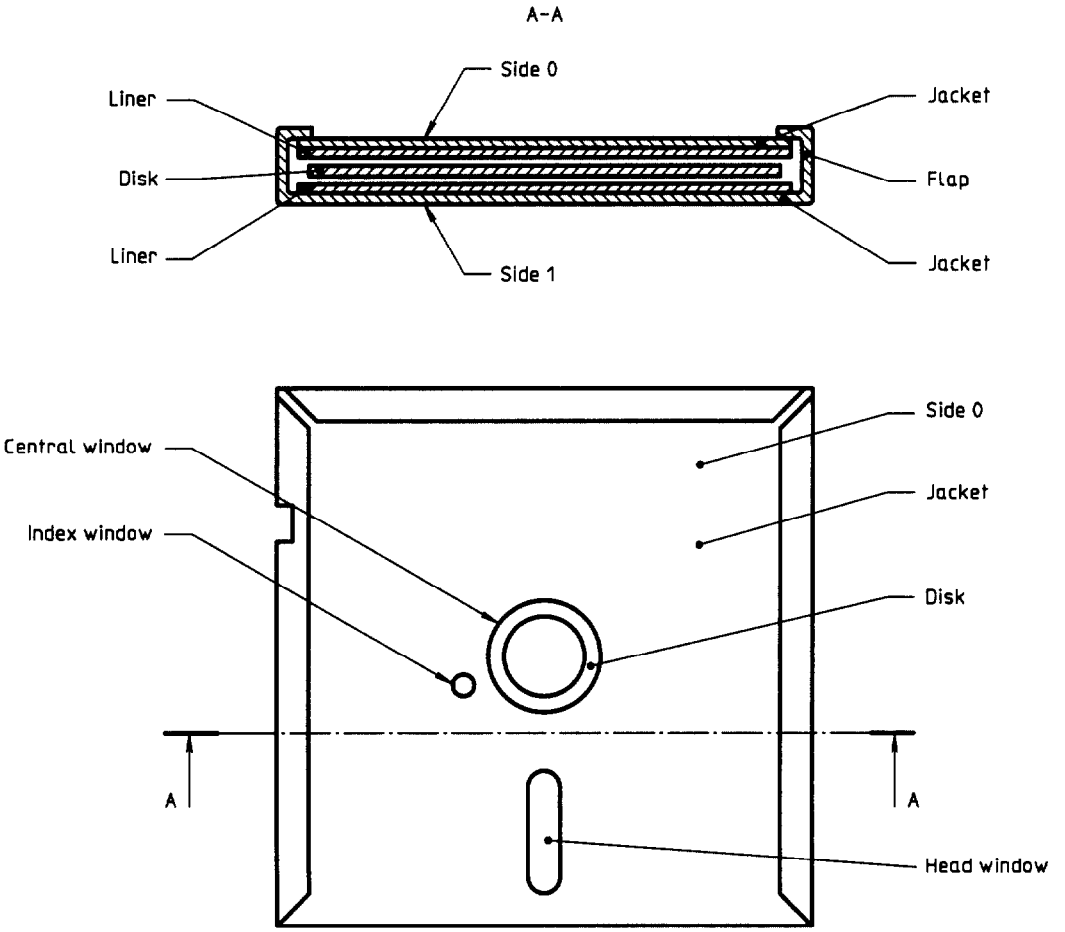

Figure 1 — Flexible disk cartridge

Copyright International Organization for Standardization
Provided by IHS under license with ISO
No reproduction or networking permitted without license from IHS
Not for Resale

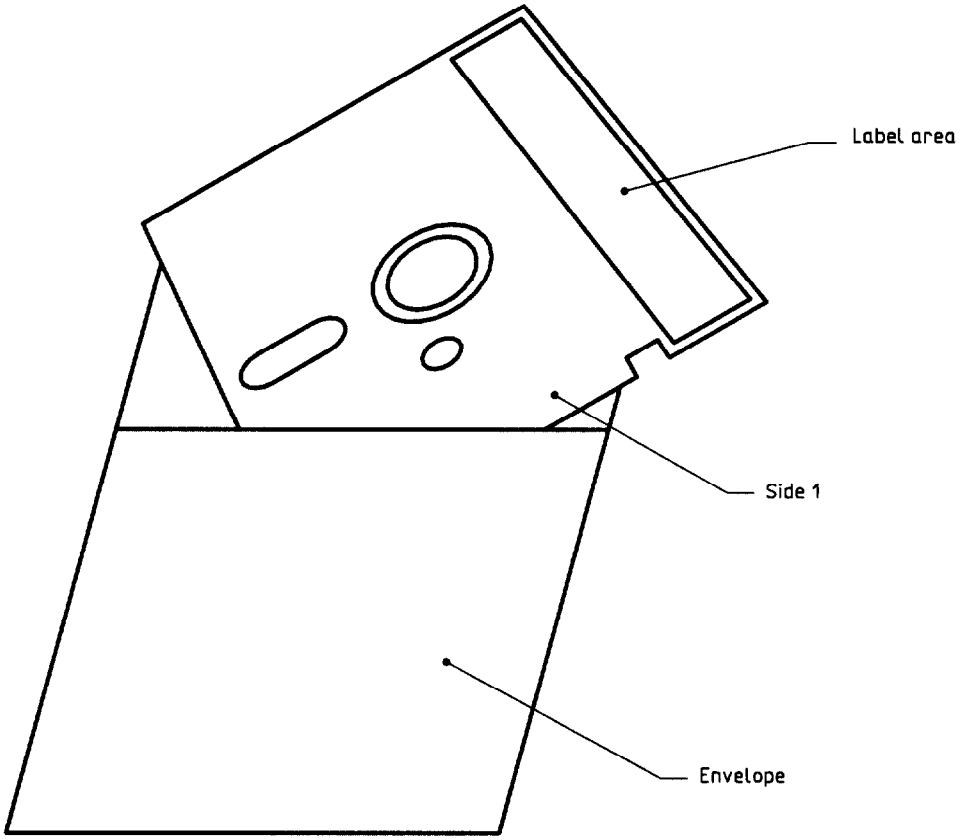

Figure 2 — Protective envelope with cartridge

Copyright International Organization for Standardization
Provided by IHS under license with ISO
No reproduction or networking permitted without license from IHS
Not for Resale

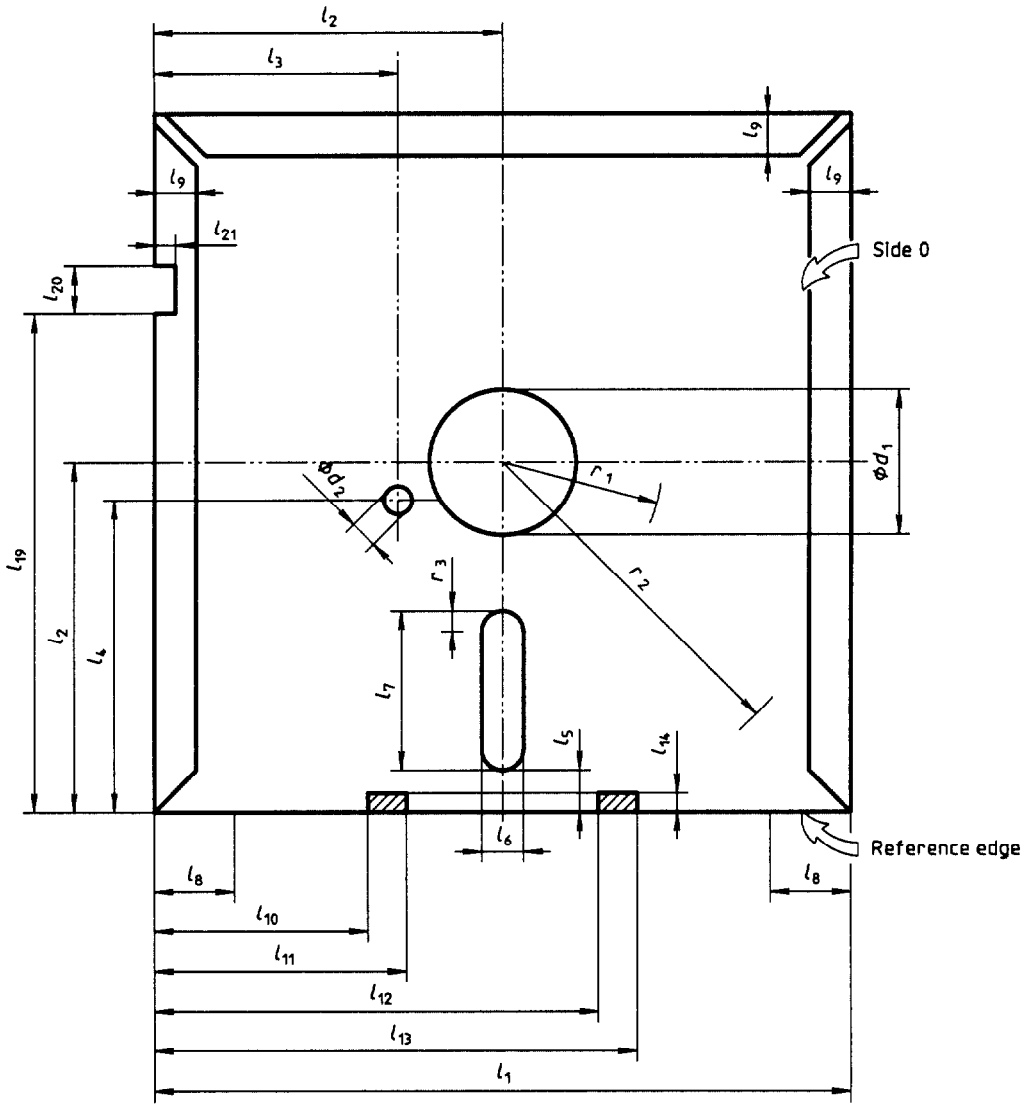

Figure 3 — Jacket dimensions

6 General requirements

6.1 Environment and transportation

6.1.1 Testing environment

Tests and measurements made on the cartridge to check the requirements of this International Standard shall be carried out under the following conditions:

— temperature: 23 °C ± 2 °C (73 °F ± 4 °F);

— relative humidity: 40 % to 60 %;

— conditioning before testing: 24 h minimum.

The temperature and the relative humidity shall be measured in the air immediately surrounding the cartridge.

The stray magnetic field at any point on the disk surface, including that resulting from the concentrating effect of the recording head, shall not exceed 4 000 A/m (50 Oe).

6.1.2 Operating environment

Cartridges used for data interchange shall be operated under the following conditions:

— temperature: 10 °C to 51,5 °C (50 °F to 125 °F);

— relative humidity: 20 % to 80 %;

Copyright International Organization for Standardization
Provided by IHS under license with ISO
No reproduction or networking permitted without license from IHS
Not for Resale

— wet-bulb temperature: less than 29 °C (84 °F).

The temperature and the relative humidity shall be measured in the air immediately surrounding the cartridge. It is recommended that the rate of change of the temperature should not exceed 20 °C (68 °F) per hour.

There shall be no deposit of moisture on or in the cartridge.

The stray magnetic field at any point on the disk surface, including that resulting from the concentrating effect of the recording head, shall not exceed 4 000 A/m (50 Oe).

6.1.3 Storage environment

During storage the cartridges shall be kept under the following conditions:

— temperature: 4 °C to 51,5 °C (40 °F to 125 °F);

— relative humidity: 8 % to 80 %.

Each cartridge shall be in an envelope and in an upright position.

There shall be no deposit of moisture on or in the cartridge.

The ambient stray magnetic field at any point on the disk surface shall not exceed 4 000 A/m (50 Oe).

NOTE 4 Cartridges which have been stored at temperatures and humidities outside the operating conditions can exhibit degraded performance characteristics. Such cartridges should be subjected to a conditioning period of not less than 24 h within the operating environment prior to use.

6.1.4 Transportation

Responsibility for ensuring that adequate precautions are taken during transportation shall be with the sender. During transportation the cartridge shall be in its envelope and in a protective package. The latter shall be free from dust or extraneous matter. It shall have a clean interior and construction to minimize ingress of dust and moisture. It is recommended that a sufficient space exists between cartridge and outer surface of the final container so that risk of damage due to stray magnetic fields will be negligible.

It is recommended that the following conditions are not exceeded:

— temperature: – 40 °C to 51,5 °C (– 40 °F to 125 °F);

— maximum rate of temperature change: 20 °C (68 °F) per hour;

— relative humidity: 8 % to 90 %. To be measured only when temperature is 5 °C (41 °F) or greater.

There should be no deposit of moisture on or in the cartridge.

6.1.5 Handling

The cartridge shall remain out of its envelope for the shortest time possible. When handling the cartridge the operator shall not touch the exposed magnetic surfaces of the disk and shall avoid exposing the cartridge to direct sunlight, moisture and dust.

6.2 Materials

6.2.1 Jacket

The jacket may be constructed from any suitable material (for example, vinyl chloride sheet).

6.2.2 Liner

The material of the liner shall be able to retain dust without damage to the disk (for example, nonwoven fabric).

6.2.3 Disk

The disk may be constructed from any suitable material (for example, biaxially oriented polyethylene terephthalate) coated on both sides with a strong and flexible layer of magnetic material (for example, $\gamma - Fe_2O_3$).

6.2.4 Envelope

The envelope may be manufactured from any suitable material (for example, paper).

6.3 Direction of rotation

The direction of rotation shall be counterclockwise when looking at side 0.

7 Dimensional characteristics

The dimensional characteristics listed in the following subclauses are indicated in figures 3 to 5.

All dimensions are referred to the reference edge of the cartridge (see figure 3).

Copyright International Organization for Standardization
Provided by IHS under license with ISO
No reproduction or networking permitted without license from IHS
Not for Resale

7.1 Jacket

7.1.1 Form

The jacket shall have a square form with angles of 90° ± 30′, and a side length

l_1 = 133,3 mm ± 0,4 mm (5,250 in ± 0,015 in)

7.1.2 Thickness

7.1.2.1 Jacket wall and liner

In an area defined by

r_1 = 35 mm (1,38 in)

r_2 = 50 mm (1,97 in)

and with a probe having a diameter of 15 mm (0,59 in) applied against the cartridge with a force of 1 N (3,6 ozf), the thickness of the jacket wall and liner shall be

e_1 = 0,45 mm ± 0,15 mm (0,018 in ± 0,006 in)

7.1.2.2 Cartridge

The overall thickness of the cartridge shall be (see 7.1.7):

1,2 mm (0,047 in) < e_2 < 2,1 mm (0,083 in),

when measured in accordance with A.1 and A.2.

The cartridge shall fall freely through a gauge with a 2,60 $^{+0,05}_{0,00}$ mm (0,100 $^{+0,002}_{0,000}$ in) wide opening having flat, vertical walls and depth of 150 mm (5,90 in).

7.1.3 Central windows

The central windows shall have a diameter

d_1 = 39,7 mm ± 0,2 mm (1,563 in ± 0,008 in)

The position of their centre is defined by

l_2 = 66,65 mm ± 0,30 mm (2,624 in ± 0,012 in)

7.1.4 Index windows

7.1.4.1 Location

The centre of the index windows shall be defined by

l_3 = 42,10 mm ± 0,25 mm (1,657 in ± 0,010 in)

l_4 = 60,00 mm ± 0,25 mm (2,362 in ± 0,010 in)

7.1.4.2 Diameter

The diameter of the index windows shall be

d_2 = 6,35 mm ± 0,20 mm (0,250 in ± 0,008 in)

7.1.5 Head windows

7.1.5.1 Location

The location of the lowest point of the head windows shall be defined by

l_5 = 3,30 mm ± 0,25 mm (0,130 in ± 0,010 in)

7.1.5.2 Dimensions

The width of the head windows shall be

l_6 = 12,7 mm ± 0,2 mm (0,500 in ± 0,008 in)

The nominal radius of their ends shall be

r_3 = 6,35 mm (0,25 in)

Their length shall be

l_7 = 35,00 mm ± 0,25 mm (1,378 in ± 0,010 in)

7.1.6 Reference edge profile

Within an area defined by

l_8 = 25 mm (1,0 in)

the reference edge shall have a convex profile; for example rounded off with one or more radii of 0,3 mm min. (0,012 in min.).

7.1.7 Construction of the jacket

If the jacket utilizes flaps, their width shall not exceed

l_9 = 12 mm (0,47 in)

The total thickness e_2 of the cartridge with flaps shall satisfy the conditions of 7.1.2.2 (see annex A).

7.1.8 Notches

Two notches may be provided along the reference edge. If provided, they shall be entirely contained within areas defined by

l_{10} = 48 mm min. (1,889 in min.)

l_{11} = 58 mm min. (2,283 in min.)

Copyright International Organization for Standardization
Provided by IHS under license with ISO
No reproduction or networking permitted without license from IHS
Not for Resale

l_{12} = 75 mm min. (2,953 in min.)

l_{13} = 85,5 mm max. (3,366 in max.)

l_{14} = 2,0 mm max. (0,078 in max.)

7.1.9 Write-enable notch

The position and size of the write-enable notch shall be defined by

l_{19} = 96,5 mm ± 0,2 mm (3,799 in ± 0,008 in)

l_{20} = 6,35 mm ± 0,13 mm (0,250 in ± 0,005 in)

l_{21} = 3,8 mm ± 0,2 mm (0,150 in ± 0,008 in)

Writing is inhibited by covering the notch with a material of sufficient stiffness and/or opacity.

7.2 Liner

The liner shall extend across the recording area (7.3.4). However, no part of the liner shall protrude by more than 0,5 mm (0,019 in) into the openings of the jacket.

7.3 Disk

7.3.1 Diameter

The external diameter of the disk shall be

d_3 = 130,2 mm ± 0,2 mm (5,125 in ± 0,008 in)

The inner diameter of the disk shall be

d_4 = 28,575 mm ± 0,025 mm

(1,125 in ± 0,001 in)

not including hub support ring, if fitted.

7.3.2 Thickness

The thickness of the disk shall be

e_3 = 0,080 mm ± 0,010 mm

(0,003 0 in ± 0,000 4 in)

not including hub support ring, if fitted.

7.3.3 Index window

7.3.3.1 Location

The location of the index window shall be defined by

r_4 = 25,4 mm ± 0,1 mm (1,000 in ± 0,004 in)

7.3.3.2 Diameter

The diameter of the index window shall be

d_5 = 2,54 mm ± 0,10 mm (0,100 in ± 0,004 in)

7.3.4 Recording area

The recording area shall be defined, on both sides by

r_5 = 31,3 mm max. (1,23 in max.)

r_6 = 62,5 mm min. (2,46 in min.)

7.3.5 Sides

For convenience of description, the two sides are defined as side 0 and side 1; they are shown in figures 1 to 3 and figure 6.

8 Physical characteristics

8.1 Inflammability

The cartridge shall be made from materials that, if ignited from a match flame, do not continue to burn in a still carbon dioxide atmosphere.

8.2 Coefficient of linear thermal expansion of the disk

The coefficient of thermal expansion of the disk shall be

(17 ± 8) × 10^{-6} per degree Celsius

8.3 Coefficient of linear hygroscopic expansion of the disk

The coefficient of hygroscopic expansion of the disk shall be

(0 to 15) × 10^{-6} per percent of relative humidity

8.4 Opacity

8.4.1 Opacity of the jacket

The jacket shall have a light transmittance of less than 1 % using an LED with a nominal wavelength of 940 nm ± 10 nm as the radiation source when measured in accordance with annex B.

Copyright International Organization for Standardization
Provided by IHS under license with ISO
No reproduction or networking permitted without license from IHS
Not for Resale

8.4.2 Opacity of the disk

The disk shall have a light transmittance of less than 1 % using an LED with a nominal wavelength of 940 nm ± 10 nm as the radiation source when measured in accordance with annex B.

8.5 Torque

8.5.1 Starting torque

The starting torque, without heads and pad(s) loaded to the cartridge, shall not exceed 0,01 N·m (1,42 ozf·in).

8.5.2 Running torque

When the disk cartridge is tested at a rotational speed of 300 rpm ± 6 rpm, with a pressure pad of 280 mm^2 ± 10 mm^2 (0,434 in^2 ± 0,015 in^2) surface applied with a force of 0,70 N ± 0,05 N (2,52 ozf ± 0,18 ozf) and located parallel to the head windows as defined in figure 6 by

l_{15} = 44 mm (1,72 in)

l_{16} = 55 mm (2,16 in)

l_{17} = 7 mm (0,28 in)

l_{18} = 35 mm (1,38 in)

the torque necessary to rotate the disk shall not exceed 0,03 N·m (4,26 ozf·in).

9 Magnetic characteristics

9.1 Track geometry

9.1.1 Number of tracks

There shall be 40 discrete concentric tracks on each side of the disk in the recording area (7.3.4) for data interchange.

9.1.2 Width of tracks

The recorded track width on the disk surface shall be

0,300 mm ± 0,025 mm (0,011 8 in ± 0,001 0 in)

The area between the tracks shall be erased. The method of measuring effective track width is given in annex C.

9.1.3 Track location

9.1.3.1 Nominal locations

The nominal radius, R_n nom., of the centrelines of all tracks shall be calculated by using the following:

$$R_n \text{ nom.} = X - \frac{n}{48} \times 25{,}4$$

or in inches

$$R_n \text{ nom.} = X - \frac{n}{48}$$

where

n is the track number (n = 00 to 39);

X = 57,150 mm for side 0 (2,250 0 in);

X = 55,033 mm for side 1 (2,166 7 in).

Therefore, each track on side 1 is offset inwards by four track positions from the track on side 0 having the same track number.

9.1.3.2 Track location tolerance

For testing purposes, the centrelines of the recorded tracks shall be within ± 0,025 mm (± 0,001 in) of the nominal positions, when measured in the testing environment (see 6.1.1).

9.1.4 Track number

The track number shall be a two-digit decimal number (00 to 39 for each side) which identifies the track consecutively, starting at the outermost track (00).

9.1.5 Index

The index signal shall only be used for timing purposes. The index is the point which determines the beginning and the end of the track. At the instant of having detected the leading edge of the index window, the index is under the read-write gap.

9.2 Functional testing

For the purpose of the following tests, the same drive unit shall be used for writing and reading operations. The in-contact operating condition shall be used.

9.2.1 Surface tests

The magnetic properties of both data surfaces are defined by the testing requirements given below.

Copyright International Organization for Standardization
Provided by IHS under license with ISO
No reproduction or networking permitted without license from IHS
Not for Resale

9.2.1.1 Test conditions

The disk shall be tested at 300 rpm ± 6 rpm. The test frequencies [flux transitions per second (ftps)] used shall be

f_1 = 125 000 ftps ± 125 ftps

f_2 = 250 000 ftps ± 250 ftps

The frequency(ies) to be used shall be specified for each test.

9.2.1.2 Typical field

The typical field of the disk under test shall be within ± 20 % of the reference field. It shall be measured using f_1 on track 00 on each side.

9.2.1.3 Average signal amplitude

When the disk under test has been recorded with the test recording current, then read back and compared with the master standard reference flexible disk cartridge recorded under the same conditions, the average signal amplitudes shall be:

a) Side 0, track 00, using f_1: less than 130 % of SRA_1 for side 0;

b) Side 0, track 39, using f_2: more than 80 % of SRA_2 for side 0;

c) Side 1, track 00, using f_1: less than 130 % of SRA_1 for side 1;

d) Side 1, track 39, using f_2: more than 80 % of SRA_2 for side 1.

9.2.1.4 Resolution

For each side record on track 39, using the test recording current for that side, the ratio of the average signal amplitude using f_2 to the average signal amplitude using f_1 shall be greater than 90 % of the ratio for the equivalent side of the master standard reference flexible disk cartridge.

9.2.1.5 Overwrite

On track 00 of each side, after recording with the appropriate test recording current, first using f_1 and then overwriting with f_2 for one revolution, the ratio of the residual average signal amplitude at f_1 after overwrite using f_2 to the average signal amplitude after first recording using f_1 shall be less than 100 % of the value of the same ratio for the master standard reference flexible disk cartridge. This test shall be performed on both sides with a frequency-selective voltmeter.

9.2.1.6 Modulation

Modulation shall be the ratio of the (Maximum mean − Minimum mean) to the (Maximum mean + Minimum mean) expressed as a percentage.

The maximum mean shall be the average value of the amplitude modulated output voltage in that part of the track with the maximum amplitudes, and the minimum mean shall be that in the respective part with the minimum amplitudes. Output voltage shall be measured peak-to-peak; averaging shall be done over about 2 000 consecutive flux transitions.

On both sides, on track 00 using f_1 and on track 39 using f_2, modulation shall be less than 10 %.

9.2.2 Track quality tests

These tests shall apply to all usable tracks at the defined positions on each side. The test recording current shall be used.

9.2.2.1 Missing pulse

Write a track at f_2 with the appropriate test recording current. Any playback signal, when measured base-to-peak, which is less than 40 % of half the arithmetically averaged value of the output voltages measured peak-to-peak over the preceding 2 000 consecutive flux transitions, shall be a missing pulse.

9.2.2.2 Extra pulse

Write a track at f_2 with the test recording current. Erase for one revolution with a constant direct current equivalent to the quiescent value of the test recording current.

Any playback signal which, when measured base-to-peak, including the statistical noise and the residual signal of the disk, exceeds 20 % of half the average signal amplitude at f_2 of the track under test, shall be an extra pulse.

9.2.3 Rejection criteria

9.2.3.1 Defective track

A track on which one or more missing and/or extra pulse are detected in the same position(s) on consecutive passes shall be a defective track. The applicable number of consecutive passes shall be a matter for agreement between the interested parties.

Copyright International Organization for Standardization
Provided by IHS under license with ISO
No reproduction or networking permitted without license from IHS
Not for Resale

9.2.3.2 Requirements for tracks

As initially received from the medium supplier, the cartridge shall have no defective tracks.

9.2.3.3 Rejected cartridge

A cartridge which does not meet the requirements of 9.2.3.2 shall be rejected.

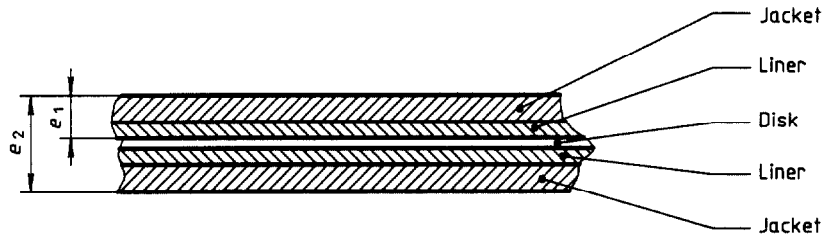

Figure 4 — Cartridge thickness

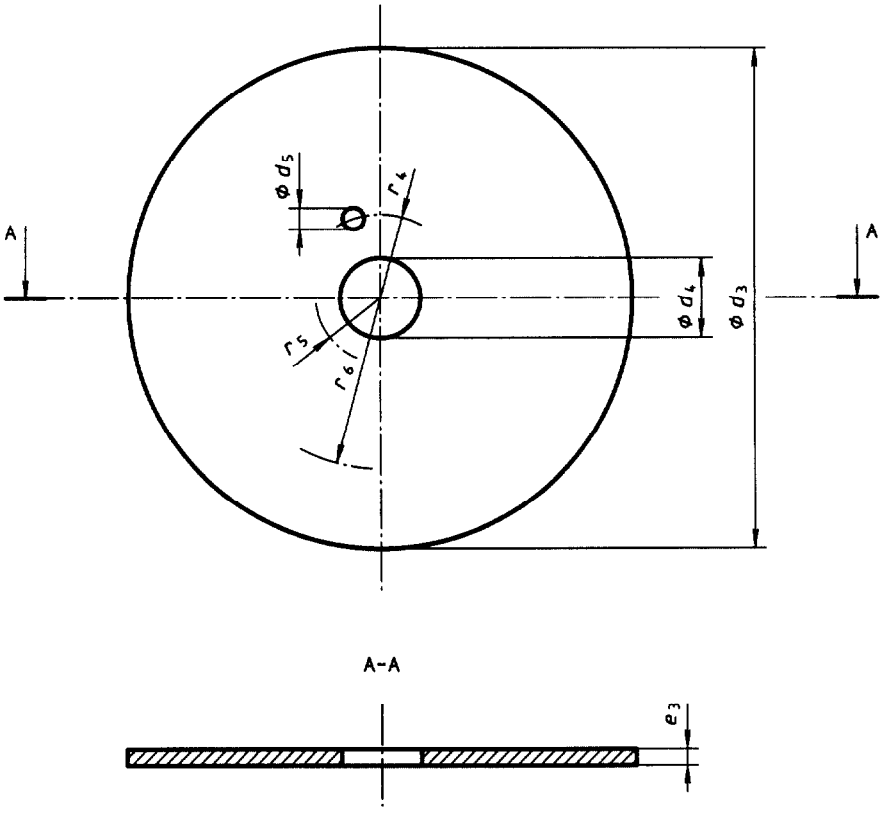

Figure 5 — Disk dimensions

Copyright International Organization for Standardization
Provided by IHS under license with ISO
No reproduction or networking permitted without license from IHS
Not for Resale

© ISO/IEC

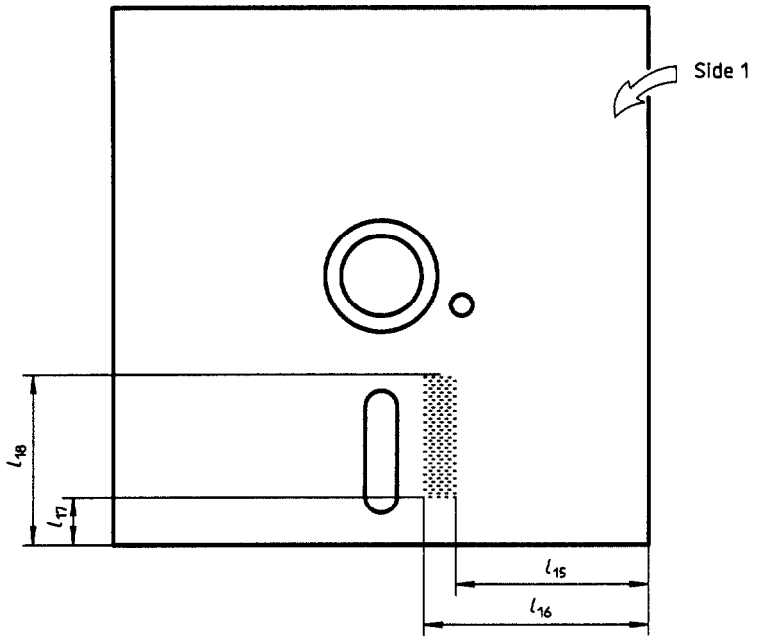

Figure 6 — Pressure pad area

Copyright International Organization for Standardization
Provided by IHS under license with ISO
No reproduction or networking permitted without license from IHS
Not for Resale

Annex A
(normative)

Measurement of the cartridge thickness

A.1 Maximum thickness

This value shall be measured for all edges using the gauge of figure A.1. The cartridge shall be capable of entering the gauge for at least 15 mm (0,59 in) when a force of 1 N max. (3,6 ozf max.) is applied on the opposite edge.

A.2 Minimum thickness

This value shall be measured for all edges using the gauge of figure A.2. This gauge has a length of 40 mm (1,57 in). When submitted to a force of 1 N (3,6 ozf) the cartridge shall enter the slot by less than 1 mm (0,039 in).

Dimensions in millimetres
(Inches in parentheses)

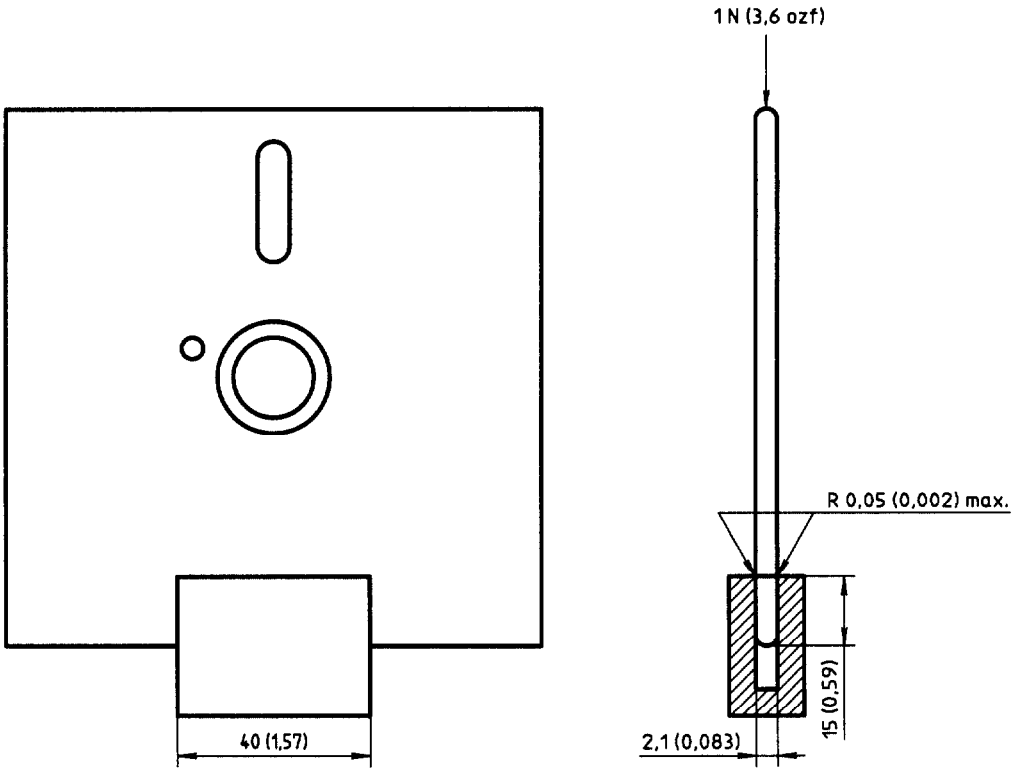

Figure A.1 — Measuring gauge for maximum thickness

Copyright International Organization for Standardization
Provided by IHS under license with ISO
No reproduction or networking permitted without license from IHS
Not for Resale

© ISO/IEC

Dimensions in millimetres
(Inches in parentheses)

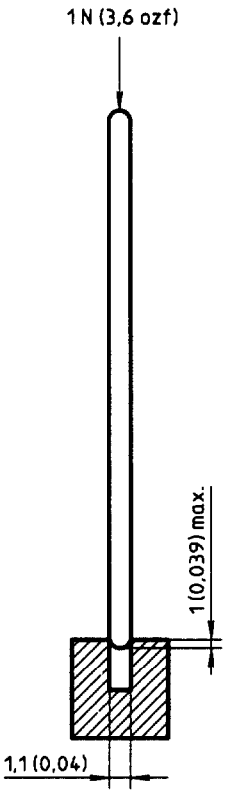

Figure A.2 — Measuring gauge for minimum thickness

Copyright International Organization for Standardization
Provided by IHS under license with ISO
No reproduction or networking permitted without license from IHS
Not for Resale

Annex B
(normative)

Measurement of light transmittance

B.1 Introduction

The following description outlines the general principle of the measuring equipment and the measuring method to be applied when measuring the radiation (light) transmittance of the jacket and of the magnetic disk.

For the purposes of this part of ISO/IEC 7487, "light transmittance" is defined by convention as the relationship between the reading obtained from the test device with the sample inserted and the reading obtained when no sample is present. The transmittance value is expressed as the percentage ratio of the two readings.

The essential elements of the measuring equipment are

— the radiation source;

— the photo diode;

— the optical path;

— the measuring circuitry.

B.2 Description of the measuring equipment

B.2.1 Radiation source

An infrared light-emitting diode (LED) with the following parameters shall be used:

Wavelength at peak emission
$\lambda_{peak} = 940 \text{ nm} \pm 10 \text{ nm}$

Half-power band width $b = \pm 50$ nm

NOTE 5 Earlier International Standards for unrecorded flexible disk cartridges required the use of an LED with a nominal wavelength of 900 nm, which is no longer available.

B.2.2 Radiation receiver

A flat silicon photo diode shall be used as the radiation receiver. It shall be operated in the short-circuit mode. The active area of the diode shall be equal to, or at the most 20 % larger than, the open area of the aperture. This condition guarantees a linear dependency of the short-circuit diode current on the light intensity.

B.2.3 Optical path

The optical axis of the setup shall be perpendicular to the disk (see figure B.1).

The distance from the emitting surface of the LED to the disk shall be

$$L_1 = \frac{d_{max}}{2 \tan \alpha}$$

where

d_{max} is the maximum diameter of the index window;

α is the angle where the relative intensity of the LED is equal to, or greater than, 95 % of the maximum intensity of the optical axis.

The aperture shall have a thickness of between 1,2 mm to 1,4 mm (0,047 in to 0,055 in) and a diameter given by

$$D = (2 L_2 \tan \alpha)$$

with

$$L_2 = (L_1 \pm 1{,}5 \text{ mm})$$

Its surfaces shall be matt black. The whole device should be enclosed within a light-tight casing.

B.2.4 Measuring circuitry

Figure B.2 shows the recommended circuitry with the following components:

E regulated power supply with variable output voltage

R current-limiting resistor

LED light-emitting diode

Copyright International Organization for Standardization
Provided by IHS under license with ISO
No reproduction or networking permitted without license from IHS
Not for Resale

D_i	Si photo diode
A	operational amplifier
R_{f0}, R_{f1}	feedback resistors
S	gain switch
V	voltmeter

The forward current of the LED and consequently its radiation power can be varied by means of the power supply E. D_i is working in the short-circuit mode. The output voltage of the operational amplifier is given by

$$V_0 = I_k \times R_f$$

and is therefore a linear function of the light intensity. I_k is the short-circuit current of D_i.

R_{f0} and R_{f1} shall be low-temperature drift resistors with an accuracy of 1 %. The following ratio applies

$$\frac{R_{f0}}{R_{f1}} = \frac{1}{50}$$

B.3 Measuring method

B.3.1 Measurement of the disk

The measurements shall be taken within an annular band whose boundaries are tangential to the index window.

— S is set to position 0. With the index window in front of the photo diode, the voltmeter is set to full-scale reading (100 % transmittance) by varying the output voltage of E.

— The disk is rotated until the photo diode is covered by the disk. S is set to position 1. Full deflection of the voltmeter now represents 2 % transmittance.

The disk is rotated slowly for one revolution and the readings of the voltmeter are observed.

B.3.2 Measurement of the jacket

The same procedure applies to the jacket measurement, except that the jacket without a disk shall be rotated.

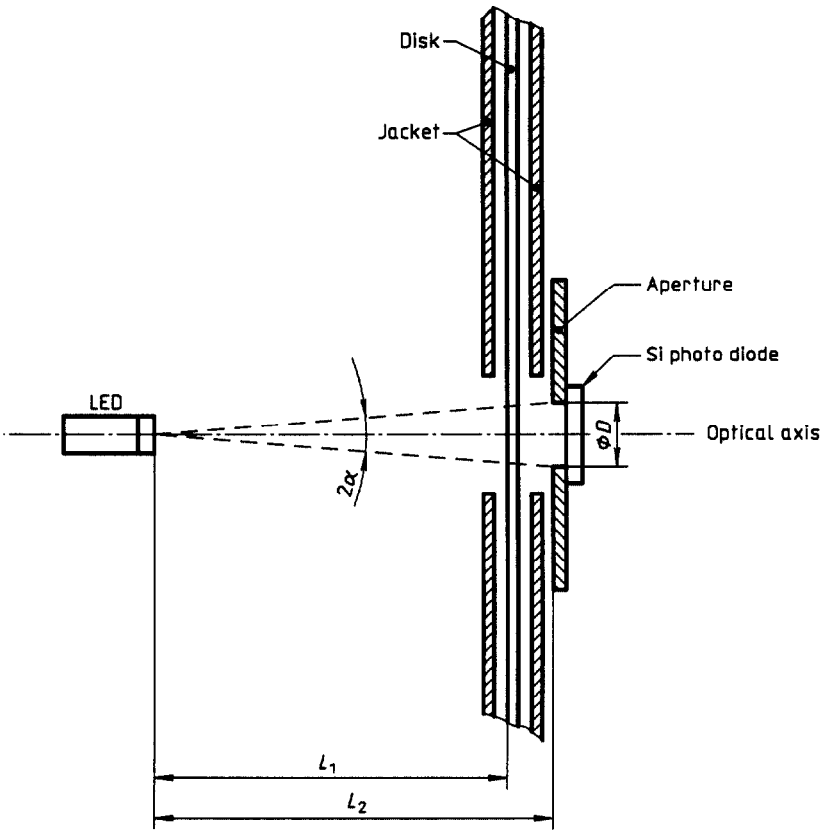

Figure B.1 — Measuring device

Copyright International Organization for Standardization
Provided by IHS under license with ISO
No reproduction or networking permitted without license from IHS
Not for Resale

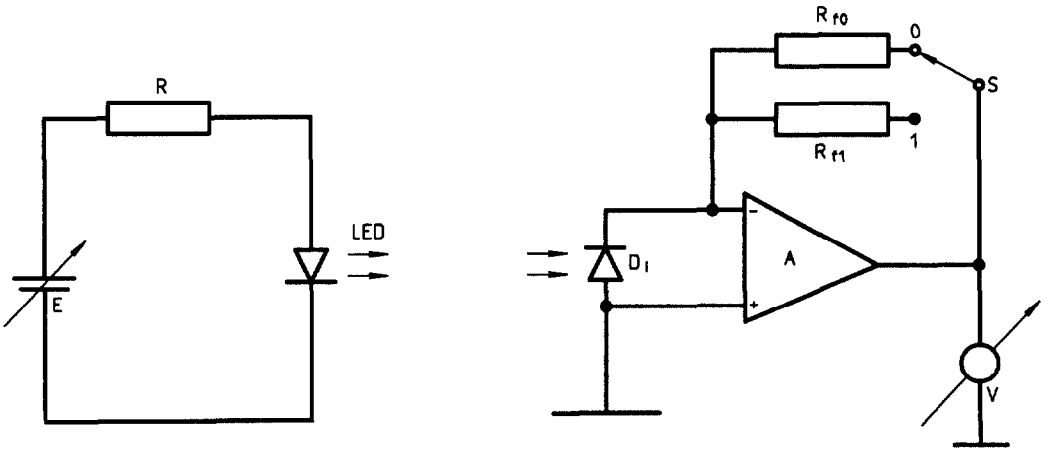

Figure B.2 — Electronic circuitry

Copyright International Organization for Standardization
Provided by IHS under license with ISO
No reproduction or networking permitted without license from IHS
Not for Resale

Annex C
(normative)

Method for measuring the effective track width

DC erase a 7-track wide band. Record a 250 000 ftps frequency pattern in a track centred in the middle of the erased band, with the read-write head with the erase element active. Measure the output voltage.

Move the head radially over the disk in increments not greater than 0,01 mm (0,000 4 in) to the left and to the right until the read back signal has decreased by 75 %. Determine the read back signal amplitude for each incremental move and plot its amplitude versus displacement. See figure C.1 for reading the half track width *A* and *B* for both sides of displacement provided the gap width of the head used is not smaller than the effective track width. The total effective track width should be the sum of 1/2 effective track width *A* and 1/2 effective track width *B*.

Repeat the test to ensure that no thermal or hygroscopic effects have taken place during the measurement.

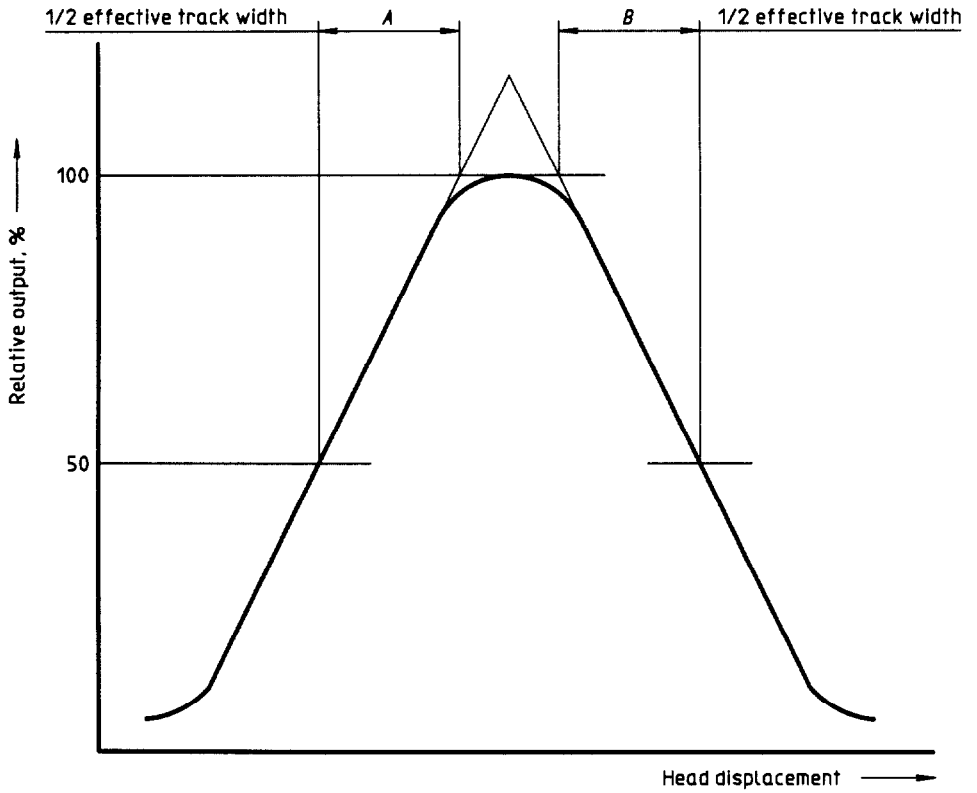

Figure C.1 — Track width

Copyright International Organization for Standardization
Provided by IHS under license with ISO
No reproduction or networking permitted without license from IHS
Not for Resale

Annex D
(informative)

Use of hub support rings

It is recognized that hub support rings are in common usage.

Their use may improve or impair data interchange according to the conditions of use.

Whether or not a hub support ring is fitted is a matter for agreement between the purchaser and supplier. It is recommended that hub support rings, if supplied, are fitted only by the original manufacturer of the flexible disk cartridge.

Copyright International Organization for Standardization
Provided by IHS under license with ISO
No reproduction or networking permitted without license from IHS
Not for Resale

Annex E
(informative)

Bibliography

[1] ISO/IEC 646:1991, *Information processing — ISO 7-bit coded character set for information interchange.*

[2] ISO 2022:1986, *Information processing — ISO 7-bit and 8-bit coded character sets — Code extension techniques.*

[3] ISO/IEC 4873:1991, *Information processing — ISO 8-bit code for information interchange — Structure and rules for implementation.*

[4] ISO/IEC 9983:1989, *Information processing systems — Designation of unrecorded flexible disk cartridges.*

Copyright International Organization for Standardization
Provided by IHS under license with ISO
No reproduction or networking permitted without license from IHS Not for Resale

© ISO/IEC

UDC 681.327.634

Descriptors: data processing, information interchange, data recording, data recording devices, magnetic recording, magnetic disks, flexible disk cartridges, specifications, dimensions, physical properties, magnetic properties, track formats, interchangeability.

Price based on 20 pages

Copyright International Organization for Standardization
Provided by IHS under license with ISO
No reproduction or networking permitted without license from IHS

Not for Resale