ISO/IEC 29341-8-20

Edition 1.0 2008-11

INTERNATIONAL STANDARD

Information technology – UPnP Device Architecture – Part 8-20: Internet Gateway Device Control Protocol – Wide Area Network Point-to-Point Protocol Connection Service

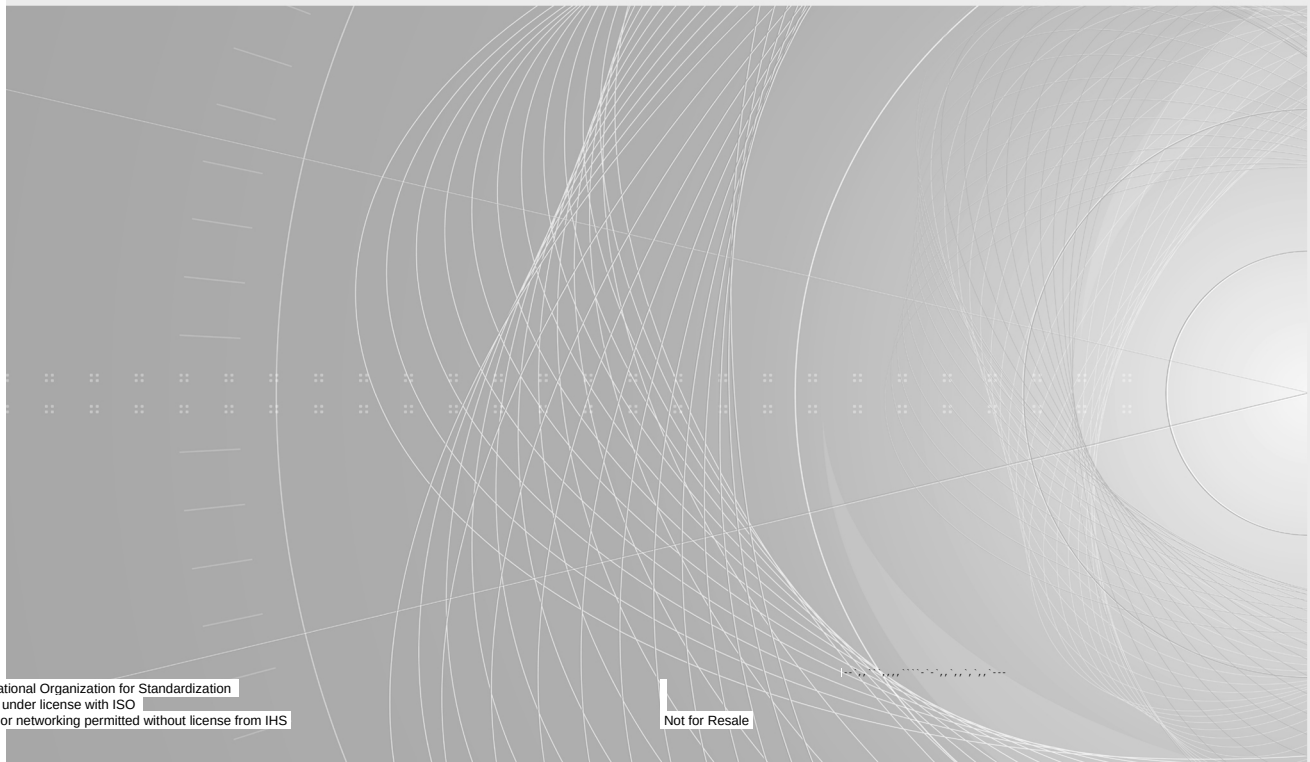

ISO/IEC 29341-8-20:2008(E)

Copyright International Organization for Standardization
Provided by IHS under license with ISO
No reproduction or networking permitted without license from IHS

Not for Resale

THIS PUBLICATION IS COPYRIGHT PROTECTED

Copyright © 2008 ISO/IEC, Geneva, Switzerland

All rights reserved. Unless otherwise specified, no part of this publication may be reproduced or utilized in any form or by any means, electronic or mechanical, including photocopying and microfilm, without permission in writing from either IEC or IEC's member National Committee in the country of the requester.

If you have any questions about ISO/IEC copyright or have an enquiry about obtaining additional rights to this publication, please contact the address below or your local IEC member National Committee for further information.

IEC Central Office
3, rue de Varembé
CH-1211 Geneva 20
Switzerland
Email: inmail@iec.ch
Web: www.iec.ch

About the IEC

The International Electrotechnical Commission (IEC) is the leading global organization that prepares and publishes International Standards for all electrical, electronic and related technologies.

About IEC publications

The technical content of IEC publications is kept under constant review by the IEC. Please make sure that you have the latest edition, a corrigenda or an amendment might have been published.

- Catalogue of IEC publications: www.iec.ch/searchpub

The IEC on-line Catalogue enables you to search by a variety of criteria (reference number, text, technical committee,…). It also gives information on projects, withdrawn and replaced publications.

- IEC Just Published: www.iec.ch/online_news/justpub

Stay up to date on all new IEC publications. Just Published details twice a month all new publications released. Available on-line and also by email.

- Electropedia: www.electropedia.org

The world's leading online dictionary of electronic and electrical terms containing more than 20 000 terms and definitions in English and French, with equivalent terms in additional languages. Also known as the International Electrotechnical Vocabulary online.

- Customer Service Centre: www.iec.ch/webstore/custserv

If you wish to give us your feedback on this publication or need further assistance, please visit the Customer Service Centre FAQ or contact us:

Email: csc@iec.ch
Tel.: +41 22 919 02 11
Fax: +41 22 919 03 00

Copyright International Organization for Standardization
Provided by IHS under license with ISO
No reproduction or networking permitted without license from IHS
Not for Resale

ISO/IEC 29341-8-20

Edition 1.0 2008-11

INTERNATIONAL STANDARD

Information technology – UPnP Device Architecture – Part 8-20: Internet Gateway Device Control Protocol – Wide Area Network Point-to-Point Protocol Connection Service

INTERNATIONAL ELECTROTECHNICAL COMMISSION

PRICE CODE X

ICS 35.200

ISBN 2-8318-1010-7

Copyright International Organization for Standardization
Provided by IHS under license with ISO
No reproduction or networking permitted without license from IHS

Not for Resale

CONTENTS

FOREWORD 5
ORIGINAL UPNP DOCUMENTS (informative) 7
1. Overview and Scope 9
2. Service Modeling Definitions 10
2.1. ServiceType 10
2.2. State Variablesgure 11
2.2.1. ConnectionType 15
2.2.2. PossibleConnectionTypes 15
2.2.3. ConnectionStatus 15
2.2.4. Uptime 15
2.2.5. UpstreamMaxBitRate 15
2.2.6. DownstreamMaxBitRate 15
2.2.7. LastConnectionError 15
2.2.8. AutoDisconnectTime 15
2.2.9. IdleDisconnectTime 15
2.2.10. WarnDisconnectDelay 16
2.2.11. RSIPAvailable 16
2.2.12. NATEnabled 16
2.2.13. UserName 16
2.2.14. Password 16
2.2.15. PPPEncryptionProtocol 16
2.2.16. PPPCompressionProtocol 16
2.2.17. PPPAuthenticationProtocol 16
2.2.18. ExternalIPAddress 16
2.2.19. PortMappingNumberOfEntries 17
2.2.20. PortMappingEnabled 17
2.2.21. PortMappingLeaseDuration 17
2.2.22. RemoteHost 17
2.2.23. ExternalPort 17
2.2.24. InternalPort 17
2.2.25. PortMappingProtocol 17
2.2.26. InternalClient 17
2.2.27. PortMappingDescription 18
2.2.28. Relationships Between State Variables 19
2.3. Eventing and Moderation 20
2.3.1. Event Model 20
2.4. Actions 21
2.4.1. SetConnectionType 22
2.4.2. GetConnectionTypeInfo 22
2.4.3. ConfigureConnection 23
2.4.4. RequestConnection 23
2.4.5. RequestTermination 24
2.4.6. ForceTermination 25
2.4.7. SetAutoDisconnectTime 25
2.4.8. SetIdleDisconnectTime 26
2.4.9. SetWarnDisconnectDelay 26
2.4.10. GetStatusInfo 27
2.4.11. GetLinkLayerMaxBitRates 27
2.4.12. GetPPPEncryptionProtocol 28
2.4.13. GetPPPCompressionProtocol 28
2.4.14. GetPPPAuthenticationProtocol 28
2.4.15. GetUserName 29
2.4.16. GetPassword 29
2.4.17. GetAutoDisconnectTime 30
2.4.18. GetIdleDisconnectTime 30

Copyright International Organization for Standardization
Provided by IHS under license with ISO
No reproduction or networking permitted without license from IHS Not for Resale

2.4.19. GetWarnDisconnectDelay....31
2.4.20. GetNATRSIPStatus....31
2.4.21. GetGenericPortMappingEntry....32
2.4.22. GetSpecificPortMappingEntry....33
2.4.23. AddPortMapping....33
2.4.24. DeletePortMapping....35
2.4.25. GetExternalIPAddress....35
2.4.26. Non-Standard Actions Implemented by a UPnP Vendor....36
2.4.27. Relationships Between Actions....36
2.4.28. Common Error Codes....36
2.5. Theory of Operation....37
2.5.1. Connection Initiation....38
2.5.2. Connection Termination....40
2.5.3. Connection Scenarios....41
2.5.4. Non-UPnP compliant clients....42
2.5.5. VPN connections....42
3. XML Service Description....44
4. Test....53

--`,,```,,,,````-`-`,,`,,`,`,,`---

Copyright International Organization for Standardization
Provided by IHS under license with ISO
No reproduction or networking permitted without license from IHS Not for Resale

LIST OF TABLES

Table 1: State Variables 11
Table 1.1: AllowedValueList for PossibleConnectionTypes 12
Table 1.2: AllowedValueList for ConnectionStatus 13
Table 1.3: AllowedValueList for LastConnectionError 14
Table 1.4: AllowedValueList for PortMappingProtocol 14
Table 2: Event Moderation 20
Table 3: Actions 21
Table 4: Arguments for SetConnectionType 22
Table 5: Arguments for GetConnectionTypeInfo 22
Table 6: Arguments for ConfigureConnection 23
Table 7: Arguments for SetAutoDisconnectTime 25
Table 8: Arguments for SetIdleDisconnectTime 26
Table 9: Arguments for SetWarnDisconnectDelay 26
Table 10: Arguments for GetStatusInfo 27
Table 11: Arguments for GetLinkLayerMaxBitRates 27
Table 12: Arguments for GetPPPEncryptionProtocol 28
Table 13: Arguments for GetPPPCompressionProtocol 28
Table 14: Arguments for GetPPPAuthenticationProtocol 29
Table 15: Arguments for GetuserName 29
Table 16: Arguments for GetPassword 29
Table 17: Arguments for GetAutoDisconnectTime 30
Table 18: Arguments for GetIdleDisconnectTime 30
Table 19: Arguments for GetWarnDisconnectDelay 31
Table 20: Arguments for GetNATRSIPStatus 31
Table 21: Arguments for GetGenericPortMappingEntry 32
Table 22: Arguments for GetSpecificPortMappingEntry 33
Table 23: Arguments for AddPortMapping 34
Table 24: Arguments for DeletePortMapping 35
Table 25: Arguments for GetExternalIPAddress 35
Table 26: Common Error Codes 36

--`,,```,,,,````-`-`,,`,,`,`,,`---

Copyright International Organization for Standardization
Provided by IHS under license with ISO
No reproduction or networking permitted without license from IHS Not for Resale

INFORMATION TECHNOLOGY – UPNP DEVICE ARCHITECTURE –

Part 8-20: Internet Gateway Device Control Protocol – Wide Area Network Point-to-Point Protocol Connection Service

FOREWORD

1) ISO (International Organization for Standardization) and IEC (International Electrotechnical Commission) form the specialized system for worldwide standardization. National bodies that are members of ISO or IEC participate in the development of International Standards. Their preparation is entrusted to technical committees; any ISO and IEC member body interested in the subject dealt with may participate in this preparatory work. International governmental and non-governmental organizations liaising with ISO and IEC also participate in this preparation.

2) In the field of information technology, ISO and IEC have established a joint technical committee, ISO/IEC JTC 1. Draft International Standards adopted by the joint technical committee are circulated to national bodies for voting. Publication as an International Standard requires approval by at least 75 % of the national bodies casting a vote.

3) The formal decisions or agreements of IEC and ISO on technical matters express, as nearly as possible, an international consensus of opinion on the relevant subjects since each technical committee has representation from all interested IEC and ISO member bodies.

4) IEC, ISO and ISO/IEC publications have the form of recommendations for international use and are accepted by IEC and ISO member bodies in that sense. While all reasonable efforts are made to ensure that the technical content of IEC, ISO and ISO/IEC publications is accurate, IEC or ISO cannot be held responsible for the way in which they are used or for any misinterpretation by any end user.

5) In order to promote international uniformity, IEC and ISO member bodies undertake to apply IEC, ISO and ISO/IEC publications transparently to the maximum extent possible in their national and regional publications. Any divergence between any ISO/IEC publication and the corresponding national or regional publication should be clearly indicated in the latter.

6) ISO and IEC provide no marking procedure to indicate their approval and cannot be rendered responsible for any equipment declared to be in conformity with an ISO/IEC publication.

7) All users should ensure that they have the latest edition of this publication.

8) No liability shall attach to IEC or ISO or its directors, employees, servants or agents including individual experts and members of their technical committees and IEC or ISO member bodies for any personal injury, property damage or other damage of any nature whatsoever, whether direct or indirect, or for costs (including legal fees) and expenses arising out of the publication of, use of, or reliance upon, this ISO/IEC publication or any other IEC, ISO or ISO/IEC publications.

9) Attention is drawn to the normative references cited in this publication. Use of the referenced publications is indispensable for the correct application of this publication.

IEC and ISO draw attention to the fact that it is claimed that compliance with this document may involve the use of patents as indicated below.

ISO and IEC take no position concerning the evidence, validity and scope of the putative patent rights. The holders of the putative patent rights have assured IEC and ISO that they are willing to negotiate free licences or licences under reasonable and non-discriminatory terms and conditions with applicants throughout the world. In this respect, the statements of the holders of the putative patent rights are registered with IEC and ISO.

Intel Corporation has informed IEC and ISO that it has patent applications or granted patents.

Information may be obtained from:

Intel Corporation
Standards Licensing Department
5200 NE Elam Young Parkway
MS: JFS-98
USA – Hillsboro, Oregon 97124

Microsoft Corporation has informed IEC and ISO that it has patent applications or granted patents as listed below:

Copyright International Organization for Standardization
Provided by IHS under license with ISO
No reproduction or networking permitted without license from IHS Not for Resale

6101499 / US; 6687755 / US; 6910068 / US; 7130895 / US; 6725281 / US; 7089307 / US; 7069312 / US; 10/783 524 /US

Information may be obtained from:

Microsoft Corporation
One Microsoft Way
USA – Redmond WA 98052

Philips International B.V. has informed IEC and ISO that it has patent applications or granted patents.

Information may be obtained from:

Philips International B.V. – IP&S
High Tech campus, building 44 3A21
NL – 5656 Eindhoven

NXP B.V. (NL) has informed IEC and ISO that it has patent applications or granted patents.

Information may be obtained from:

NXP B.V. (NL)
High Tech campus 60
NL – 5656 AG Eindhoven

Matsushita Electric Industrial Co. Ltd. has informed IEC and ISO that it has patent applications or granted patents.

Information may be obtained from:

Matsushita Electric Industrial Co. Ltd.
1-3-7 Shiromi, Chuoh-ku
JP – Osaka 540-6139

Hewlett Packard Company has informed IEC and ISO that it has patent applications or granted patents as listed below:

5 956 487 / US; 6 170 007 / US; 6 139 177 / US; 6 529 936 / US; 6 470 339 / US; 6 571 388 / US; 6 205 466 / US

Information may be obtained from:

Hewlett Packard Company
1501 Page Mill Road
USA – Palo Alto, CA 94304

Samsung Electronics Co. Ltd. has informed IEC and ISO that it has patent applications or granted patents.

Information may be obtained from:

Digital Media Business, Samsung Electronics Co. Ltd.
416 Maetan-3 Dong, Yeongtang-Gu,
KR – Suwon City 443-742

Attention is drawn to the possibility that some of the elements of this document may be the subject of patent rights other than those identified above. IEC and ISO shall not be held responsible for identifying any or all such patent rights.

ISO/IEC 29341-8-20 was prepared by UPnP Implementers Corporation and adopted, under the PAS procedure, by joint technical committee ISO/IEC JTC 1, *Information technology*, in parallel with its approval by national bodies of ISO and IEC.

The list of all currently available parts of the ISO/IEC 29341 series, under the general title *Universal plug and play (UPnP) architecture*, can be found on the IEC web site.

This International Standard has been approved by vote of the member bodies, and the voting results may be obtained from the address given on the second title page.

--`,,```,,,,````-`-`,,`,,`,`,,`---

Copyright International Organization for Standardization
Provided by IHS under license with ISO
No reproduction or networking permitted without license from IHS Not for Resale

ORIGINAL UPNP DOCUMENTS
(informative)

Reference may be made in this document to original UPnP documents. These references are retained in order to maintain consistency between the specifications as published by ISO/IEC and by UPnP Implementers Corporation. The following table indicates the original UPnP document titles and the corresponding part of ISO/IEC 29341:

UPnP Document Title	**ISO/IEC 29341 Part**
UPnP Device Architecture 1.0	ISO/IEC 29341-1
UPnP Basic:1 Device	ISO/IEC 29341-2
UPnP AV Architecture:1	ISO/IEC 29341-3-1
UPnP MediaRenderer:1 Device	ISO/IEC 29341-3-2
UPnP MediaServer:1 Device	ISO/IEC 29341-3-3
UPnP AVTransport:1 Service	ISO/IEC 29341-3-10
UPnP ConnectionManager:1 Service	ISO/IEC 29341-3-11
UPnP ContentDirectory:1 Service	ISO/IEC 29341-3-12
UPnP RenderingControl:1 Service	ISO/IEC 29341-3-13
UPnP MediaRenderer:2 Device	ISO/IEC 29341-4-2
UPnP MediaServer:2 Device	ISO/IEC 29341-4-3
UPnP AV Datastructure Template:1	ISO/IEC 29341-4-4
UPnP AVTransport:2 Service	ISO/IEC 29341-4-10
UPnP ConnectionManager:2 Service	ISO/IEC 29341-4-11
UPnP ContentDirectory:2 Service	ISO/IEC 29341-4-12
UPnP RenderingControl:2 Service	ISO/IEC 29341-4-13
UPnP ScheduledRecording:1	ISO/IEC 29341-4-14
UPnP DigitalSecurityCamera:1 Device	ISO/IEC 29341-5-1
UPnP DigitalSecurityCameraMotionImage:1 Service	ISO/IEC 29341-5-10
UPnP DigitalSecurityCameraSettings:1 Service	ISO/IEC 29341-5-11
UPnP DigitalSecurityCameraStillImage:1 Service	ISO/IEC 29341-5-12
UPnP HVAC_System:1 Device	ISO/IEC 29341-6-1
UPnP HVAC_ZoneThermostat:1 Device	ISO/IEC 29341-6-2
UPnP ControlValve:1 Service	ISO/IEC 29341-6-10
UPnP HVAC_FanOperatingMode:1 Service	ISO/IEC 29341-6-11
UPnP FanSpeed:1 Service	ISO/IEC 29341-6-12
UPnP HouseStatus:1 Service	ISO/IEC 29341-6-13
UPnP HVAC_SetpointSchedule:1 Service	ISO/IEC 29341-6-14
UPnP TemperatureSensor:1 Service	ISO/IEC 29341-6-15
UPnP TemperatureSetpoint:1 Service	ISO/IEC 29341-6-16
UPnP HVAC_UserOperatingMode:1 Service	ISO/IEC 29341-6-17
UPnP BinaryLight:1 Device	ISO/IEC 29341-7-1
UPnP DimmableLight:1 Device	ISO/IEC 29341-7-2
UPnP Dimming:1 Service	ISO/IEC 29341-7-10
UPnP SwitchPower:1 Service	ISO/IEC 29341-7-11
UPnP InternetGatewayDevice:1 Device	ISO/IEC 29341-8-1
UPnP LANDevice:1 Device	ISO/IEC 29341-8-2
UPnP WANDevice:1 Device	ISO/IEC 29341-8-3
UPnP WANConnectionDevice:1 Device	ISO/IEC 29341-8-4
UPnP WLANAccessPointDevice:1 Device	ISO/IEC 29341-8-5
UPnP LANHostConfigManagement:1 Service	ISO/IEC 29341-8-10
UPnP Layer3Forwarding:1 Service	ISO/IEC 29341-8-11
UPnP LinkAuthentication:1 Service	ISO/IEC 29341-8-12
UPnP RadiusClient:1 Service	ISO/IEC 29341-8-13
UPnP WANCableLinkConfig:1 Service	ISO/IEC 29341-8-14
UPnP WANCommonInterfaceConfig:1 Service	ISO/IEC 29341-8-15
UPnP WANDSLLinkConfig:1 Service	ISO/IEC 29341-8-16
UPnP WANEthernetLinkConfig:1 Service	ISO/IEC 29341-8-17
UPnP WANIPConnection:1 Service	ISO/IEC 29341-8-18
UPnP WANPOTSLinkConfig:1 Service	ISO/IEC 29341-8-19
UPnP WANPPPConnection:1 Service	ISO/IEC 29341-8-20
UPnP WLANConfiguration:1 Service	ISO/IEC 29341-8-21
UPnP Printer:1 Device	ISO/IEC 29341-9-1
UPnP Scanner:1.0 Device	ISO/IEC 29341-9-2
UPnP ExternalActivity:1 Service	ISO/IEC 29341-9-10
UPnP Feeder:1.0 Service	ISO/IEC 29341-9-11
UPnP PrintBasic:1 Service	ISO/IEC 29341-9-12
UPnP Scan:1 Service	ISO/IEC 29341-9-13
UPnP QoS Architecture:1.0	ISO/IEC 29341-10-1
UPnP QosDevice:1 Service	ISO/IEC 29341-10-10
UPnP QosManager:1 Service	ISO/IEC 29341-10-11
UPnP QosPolicyHolder:1 Service	ISO/IEC 29341-10-12
UPnP QoS Architecture:2	ISO/IEC 29341-11-1
UPnP QOS v2 Schema Files	ISO/IEC 29341-11-2

Copyright International Organization for Standardization
Provided by IHS under license with ISO
No reproduction or networking permitted without license from IHS Not for Resale

UPnP Document Title	ISO/IEC 29341 Part
UPnP QosDevice:2 Service	ISO/IEC 29341-11-10
UPnP QosManager:2 Service	ISO/IEC 29341-11-11
UPnP QosPolicyHolder:2 Service	ISO/IEC 29341-11-12
UPnP RemoteUIClientDevice:1 Device	ISO/IEC 29341-12-1
UPnP RemoteUIServerDevice:1 Device	ISO/IEC 29341-12-2
UPnP RemoteUIClient:1 Service	ISO/IEC 29341-12-10
UPnP RemoteUIServer:1 Service	ISO/IEC 29341-12-11
UPnP DeviceSecurity:1 Service	ISO/IEC 29341-13-10
UPnP SecurityConsole:1 Service	ISO/IEC 29341-13-11

Copyright International Organization for Standardization
Provided by IHS under license with ISO
No reproduction or networking permitted without license from IHS Not for Resale

1. Overview and Scope

This service definition is compliant with the UPnP Device Architecture version 1.0.

This service-type enables a UPnP control point to configure and control PPP connections on the WAN interface of a UPnP compliant ***InternetGatewayDevice***[*]. Any type of WAN interface (for e.g., DSL or POTS) that can support a PPP connection can use this service.

The service is REQUIRED if a PPP connection is used for WAN access, and is specified in
urn:schemas-upnp-org:device:*WANConnectionDevice*
one or more instances of which are specified under the device
urn:schemas-upnp-org:device:*WANDevice*

An instance of ***WANDevice*** is specified under the root device
urn:schemas-upnp-org:device:*InternetGatewayDevice*

Generally, Internet connections are set up from a WAN interface of the ***InternetGatewayDevice*** to Internet Service Providers (ISPs). However, an implementation MAY support PPP connections that are bridged or relayed (as in the case of some DSL modems) through the gateway device. ***WANDevice*** is a container for all UPnP services associated with a physical WAN device. It is assumed that clients are connected to ***InternetGatewayDevice*** via a LAN (IP-based network).

An instance of a ***WANPPPConnection*** service is activated (refer to SST below) for each actual Internet Connection instance on a ***WANConnectionDevice***. ***WANPPPConnection*** service provides PPP-level connectivity with an ISP for networked clients on the LAN. More than one instance of ***WANPPPConnection*** service may be defined on a ***WANConnectionDevice*** – representing multiple user accounts using the same link (username / password) to an ISP.

Multiple instances of this service will be distinguished based on the `ServiceID` for each service instance.

In accordance with UPnP Architecture version 1.0, the maximum number of ***WANPPPConnection*** service instances is static and specified in the ***InternetGatewayDevice*** description document.

A ***WANConnectionDevice*** MAY include a ***WAN{POTS/DSL/Cable/Ethernet}LinkConfig*** service that encapsulates Internet access properties pertaining to the physical link of a particular WAN access type. These properties are common to all instances of ***WANPPPConnection*** in a ***WANConnectionDevice.***

A ***WANDevice*** provides a ***WANCommonInterfaceConfig*** service that encapsulates Internet access properties common across all ***WANConnectionDevice*** instances.

[*] Refer to companion documents defined by the UPnP Internet Gateway working committee for more details on specific devices and services referenced in this document.

Copyright International Organization for Standardization
Provided by IHS under license with ISO
No reproduction or networking permitted without license from IHS Not for Resale

2. Service Modeling Definitions

2.1. ServiceType

The following service type identifies a service that is compliant with this template:

urn:schemas-upnp-org:service:*WANPPPConnection:1*.

--`,,```,,,,````-`-`,,`,,`,`,,`---

Copyright International Organization for Standardization
Provided by IHS under license with ISO
No reproduction or networking permitted without license from IHS Not for Resale

2.2. State Variables

Table 1: State Variables

Variable Name	Req. or Opt.[1]	Data Type	Allowed Value [1]	Default Value [2]	Eng. Units
ConnectionType	R	string	Depends on PossibleConnectionTypes	Not specified	N/A
PossibleConnectionTypes	R	string	See Table 1.1	Not specified	N/A
ConnectionStatus	R	string	See Table 1.2	Not specified	N/A
Uptime	R	ui4	Undefined	Not specified	seconds
UpstreamMaxBitRate	R	ui4	>= 0	Not specified	bitspersecond
DownstreamMaxBitRate	R	ui4	>= 0	Not specified	bitspersecond
LastConnectionError	R	string	See Table 1.3	Not specified	N/A
AutoDisconnectTime	O	ui4	>= 0	Not specified	seconds
IdleDisconnectTime	O	ui4	>= 0	Not specified	seconds
WarnDisconnectDelay	O	ui4	>= 0	Not specified	seconds
RSIPAvailable	R	boolean	0, 1	Not specified	N/A
NATEnabled	R	boolean	0,1	Not specified	N/A
UserName	O	string	Undefined	Empty string	N/A
Password	O	string	Undefined	Empty string	N/A
PPPEncryptionProtocol	O	string	Undefined	Empty string	N/A
PPPCompressionProtocol	O	string	Undefined	Empty string	N/A
PPPAuthenticationProtocol	O	string	Undefined	Empty string	N/A
ExternalIPAddress	R	string	String of the type “x.x.x.x”	Empty string	N/A
PortMappingNumberOfEntries	R	ui2	>=0	Not specified	N/A
PortMappingEnabled	R	boolean	0,1	Not specified	N/A
PortMappingLeaseDuration	R	ui4	0 to maximum value of ui4	Not specified	seconds
RemoteHost	R	string	String of the type “x.x.x.x” or empty string	Empty string	N/A
ExternalPort	R	ui2	Between 0 and 65535 inclusive	Not specified	N/A
InternalPort	R	ui2	Between 1 and 65535 inclusive	Not specified	N/A
PortMappingProtocol	R	string	See Table 1.4	Empty string	N/A
InternalClient	R	string	String of the type “x.x.x.x”	Empty string	N/A
PortMappingDescription	R	string	Undefined	Empty string	N/A
Non-standard state variables implemented by an UPnP vendor go here.	*X*	*TBD*	*TBD*	*TBD*	*TBD*

[1] R = Required, O = Optional, X = Non-standard.

[2] Values listed in this column are required. To specify standard optional values or to delegate assignment of values to the vendor, you must reference a specific instance of an appropriate table below.

--`,,```,,,,````-`-`,,`,,`,`,,`---

Copyright International Organization for Standardization
Provided by IHS under license with ISO
No reproduction or networking permitted without license from IHS Not for Resale

NOTE: Default values are not specified in the DCP. A vendor may however choose to provide default values for SST variables where appropriate.

Table 1.1: AllowedValueList for `PossibleConnectionTypes`

PLEASE NOTE: PossibleConnectionTypes is defined as a comma-separated string. However, the values within the string are restricted to the list given in the table below. We have used the allowedValueList table format only as a convenience to represent these values.

Value	Req. or Opt.	Description
Unconfigured	R	Valid connection types cannot be identified. This may be due to the fact that the `LinkType` variable (if specified in the ***WAN*LinkConfig*** service) is unspecified. **THIS VALUE IS DEPENDENT ON THE DEPLOYMENT AND TESTING SHOULD BE DEFERED TO THE VENDOR.**
IP_Routed	R	The Internet Gateway is an IP router between the LAN and the WAN connection. **THIS VALUE IS ONLY APPLICABLE FOR AN IGD DEVICE SUPPORTING NAT. SHOULD NOT BE TESTED IN OTHER DEVICE CONFIGURATIONS.**
DHCP_Spoofed	R	The Internet Gateway is an IP router with a DHCP spoofer. This DHCP spoofer is a proxy between IPCP (the IP configuration mechanism used by PPP) or DHCP on the WAN connection and DHCP on the LAN. The IP address obtained via IPCP or DHCP from the ISP is relayed back as a DHCP response to a CP on the LAN.
PPPoE_Bridged	R	The Internet Gateway is an Ethernet bridge between the LAN and the WAN connection. A PPPoE RAS server at the end of the WAN connection terminates PPPoE connections initiated by control points on the LAN. **ONLY VALID IF IGD SUPPORTS THE CONFIGURATION AS DESCRIBED.**
PPTP_Relay	R	The Internet Gateway relays PPP sessions originating via PPTP on the LAN over the WAN configured as PPPoA. The gateway hosts a PPTP PNS to terminate the PPTP connection. **ONLY VALID IF IGD SUPPORTS THE CONFIGURATION AS DESCRIBED.**
L2TP_Relay	R	The Internet Gateway relays PPP sessions originating via L2TP on the LAN over the WAN configured as PPPoA. The gateway hosts a L2TP LNS to terminate the L2TP connection. **ONLY VALID IF IGD SUPPORTS THE CONFIGURATION AS DESCRIBED.**
PPPoE_Relay	R	The Internet Gateway relays a PPPoE tunnel on the LAN over the WAN configured as PPPoA. The gateway hosts a PPPoE server / access concentrator to terminate the PPPoE connection on the LAN. **ONLY VALID IF IGD SUPPORTS THE CONFIGURATION AS DESCRIBED.**

NOTE: Refer to the ***WANConnectionDevice*** specification for valid combinations of `LinkType` and `PossibleConnectionTypes` for different modems that can support PPP based connections.

The expected behavior of connection related actions for the different connection types is described in the Theory of Operation section.

Copyright International Organization for Standardization
Provided by IHS under license with ISO
No reproduction or networking permitted without license from IHS Not for Resale

Table 1.2: AllowedValueList for `ConnectionStatus`

Value	Req. or Opt.	Description
Unconfigured	*R*	This value indicates that other variables in the service table are either uninitialized or in an invalid state. Examples of such variables include `PossibleConnectionTypes`, `ConnectionType`, `UserName` and `Password`.
Connecting	*O*	The ***WANConnectionDevice*** is in the process of initiating a connection for the first time after the connection became disconnected.
Authenticating	*O*	The gateway is in the process of authenticating to the ISP for establishing the connection.
Connected	*R*	At least one client has successfully initiated an Internet connection using this instance.
PendingDisconnect	*O*	The connection is active (packets are allowed to flow through), but will transition to *Disconnecting* state after a certain period (indicated by `WarnDisconnectDelay`).
Disconnecting	*O*	The ***WANConnectionDevice*** is in the process of terminating a connection. On successful termination, `ConnectionStatus` transitions to *Disconnected*.
Disconnected	*R*	No ISP connection is active (or being activated) from this connection instance. No packets are transiting the gateway.

NOTE: Whether or not a control point gets notified of the intermediary states of a connection transition may depend on the gateway implementation.

Copyright International Organization for Standardization
Provided by IHS under license with ISO
No reproduction or networking permitted without license from IHS
Not for Resale

Table 1.3: AllowedValueList for `LastConnectionError`

Value	Req. or Opt.
ERROR_NONE	*R*
ERROR_ISP_TIME_OUT	*O*
ERROR_COMMAND_ABORTED	*O*
ERROR_ NOT_ENABLED_FOR_INTERNET	*O*
ERROR_BAD_PHONE_NUMBER	*O*
ERROR_USER_DISCONNECT	*O*
ERROR_ISP_DISCONNECT	*O*
ERROR_IDLE_DISCONNECT	*O*
ERROR_FORCED_DISCONNECT	*O*
ERROR_SERVER_OUT_OF_RESOURCES	*O*
ERROR_RESTRICTED_LOGON_HOURS	*O*
ERROR_ACCOUNT_DISABLED	*O*
ERROR_ACCOUNT_EXPIRED	*O*
ERROR_PASSWORD_EXPIRED	*O*
ERROR_AUTHENTICATION_FAILURE	*O*
ERROR_NO_DIALTONE	*O*
ERROR_NO_CARRIER	*O*
ERROR_NO_ANSWER	*O*
ERROR_LINE_BUSY	*O*
ERROR_UNSUPPORTED_BITSPERSECOND	*O*
ERROR_TOO_MANY_LINE_ERRORS	*O*
ERROR_IP_CONFIGURATION	*O*
ERROR_UNKNOWN	*O*

Table 1.4: AllowedValueList for PortMapping`Protocol`

Value	Req. or Opt.
TCP	*R*
UDP	*R*

--`,,```,,,,````-`-`,,`,,`,`,,`---

Copyright International Organization for Standardization
Provided by IHS under license with ISO
No reproduction or networking permitted without license from IHS Not for Resale

2.2.1. ConnectionType

This variable is set to specify the connection type for a specific active connection. The value selected must be one from the list specified in `PossibleConnectionTypes`.

2.2.2. PossibleConnectionTypes

This variable represents a comma-separated string indicating the types of connections possible in the context of a specific modem and link type. Possible values are a subset or proper subset of values listed in table 1.1

2.2.3. ConnectionStatus

This variable represents current status of an Internet connection. Possible string values are specified in table 1.2

2.2.4. Uptime

This variable represents the time in seconds that this connection has stayed up.

2.2.5. UpstreamMaxBitRate

This variable represents the maximum upstream bit rate available to this connection instance. This variable has a static value once a connection is setup.

2.2.6. DownstreamMaxBitRate

This variable represents the maximum downstream bit rate available to this connection instance. This variable has a static value once a connection is setup.

2.2.7. LastConnectionError

This variable is a string that provides information about the cause of failure for the last connection setup attempt. The restricted list of enumeration values are listed in table 1.3

2.2.8. AutoDisconnectTime

This variable represents time in seconds (since the establishment of the connection – measured from the time `ConnectionStatus` transitions to ***Connected***), after which connection termination is automatically initiated by the gateway. This occurs irrespective of whether the connection is being used or not. A value of *zero* for `AutoDisconnectTime` indicates that the connection is not to be turned off automatically. However, this may be overridden by –

- An implementation specific WAN/Gateway device policy
- `EnabledForInternet` variable (see ***WANCommonInterfaceConfig***[*]) being set to 0 by a user control point
- Connection termination initiated by ISP.

If `WarnDisconnectDelay` is non-zero, the connection state is changed to ***PendingDisconnect***. It stays in this state for `WarnDisconnectDelay` seconds (if no connection requests are made) before switching to ***Disconnected***.

2.2.9. IdleDisconnectTime

It represents the idle time of a connection in seconds (since the establishment of the connection), after which connection termination is initiated by the gateway. A value of *zero* for this variable allows infinite idle time – connection will not be terminated due to idle time.

---

[*] Refer to companion document defined by the UPnP Internet Gateway working committee for more details on this variable

Copyright International Organization for Standardization
Provided by IHS under license with ISO
No reproduction or networking permitted without license from IHS Not for Resale

Note: Layer 2 heartbeat packets are included as part of an idle state i.e., they do not reset the idle timer
If `WarnDisconnectDelay` is non-zero, the connection state is changed to ***PendingDisconnect***. It stays in this state for `WarnDisconnectDelay` seconds (if no connection requests are made) before switching to ***Disconnected***.

2.2.10.WarnDisconnectDelay

This variable represents time in seconds the `ConnectionStatus` remains in the ***PendingDisconnect*** state before transitioning to ***Disconnecting*** state to drop the connection. For example, if this variable was set to 5 seconds, and one of the clients terminates an active connection, the gateway will wait (with `ConnectionStatus` as ***PendingDisconnect***) for 5 seconds before actual termination of the connection.
A value of *zero* for this variable indicates that no warning will be given to clients before terminating the connection.

2.2.11.RSIPAvailable

This variable indicates if Realm-specific IP (RSIP) is available as a feature on the ***InternetGatewayDevice***. RSIP is being defined in the NAT working group in the IETF to allow host-NATing using a standard set of message exchanges. It also allows end-to-end applications that otherwise break if NAT is introduced (e.g. IPsec-based VPNs).

A gateway that does not support RSIP should set this variable to 0.

2.2.12.NATEnabled

This variable indicates if Network Address Translation (NAT) is enabled for this connection.

2.2.13.UserName

This variable refers to the User name used to login to the Internet Service Provider

2.2.14.Password

This variable represents the Authentication token used to login to the ISP.
NOTE: A vendor may have to implement an encryption protocol to carry the Password over the wire from a control point to an ***InternetGatewayDevice***. UPnP does not formalize a mechanism to do so at this time.

2.2.15.PPPEncryptionProtocol

This variable describes the PPP encryption protocol used between the WAN device and the ISP POP. It is a read-only variable. An example of a PPP encryption protocol is MPPE.

2.2.16.PPPCompressionProtocol

This variable describes the PPP compression protocol used between the WAN device and the ISP POP. It is a read-only variable. An example of a PPP compression protocol would be VanJacobsen.

2.2.17.PPPAuthenticationProtocol

This variable describes the PPP authentication protocol used between the WAN device and the ISP POP. It is a read-only variable. Some examples of authentication protocols are PAP, CHAP, MSCHAP.

2.2.18.ExternalIPAddress

This is the external IP address used by NAT for the connection.

--`,,```,,,,````-`-`,,`,,`,`,,`---

Copyright International Organization for Standardization
Provided by IHS under license with ISO
No reproduction or networking permitted without license from IHS Not for Resale

2.2.19.PortMappingNumberOfEntries

This variable indicates the number of NAT port mapping entries (number of elements in the array) configured on this connection.

2.2.20.PortMappingEnabled

This variable allows security conscious users to disable and enable dynamic and static NAT port mappings on the IGD.

2.2.21.PortMappingLeaseDuration

This variable determines the time to live in seconds of a port-mapping lease. A value of 0 means the port mapping is static. Non-zero values will allow support for dynamic port mappings. Note that static port mappings do not necessarily mean persistence of these mappings across device resets or reboots. It is up to a gateway vendor to implement persistence as appropriate for their IGD device.

2.2.22.RemoteHost

This variable represents the source of inbound IP packets. This will be a wildcard in most cases (i.e. an empty string). NAT vendors are only required to support wildcards. A non-wildcard value will allow for "narrow" port mappings, which may be desirable in some usage scenarios.When `RemoteHost` is a wildcard, all traffic sent to the `ExternalPort` on the WAN interface of the gateway is forwarded to the `InternalClient` on the `InternalPort`. When `RemoteHost` is specified as one external IP address as opposed to a wildcard, the NAT will only forward inbound packets from this `RemoteHost` to the `InternalClient`, all other packets will be dropped.

2.2.23.ExternalPort

This variable represents the external port that the NAT gateway would "listen" on for connection requests to a corresponding `InternalPort` on an `InternalClient`. Inbound packets to this external port on the WAN interface of the gateway should be forwarded to `InternalClient` on the `InternalPort` on which the message was received. If this value is specified as a wildcard (i.e. 0), connection request on all external ports (that are not otherwise mapped) will be forwarded to `InternalClient`. In the wildcard case, the value(s) of `InternalPort` on `InternalClient` are ignored by the IGD for those connections that are forwarded to `InternalClient`. Obviously only one such entry can exist in the NAT at any time and conflicts are handled with a "first write wins" behavior.

2.2.24.InternalPort

This variable represents the port on `InternalClient` that the gateway should forward connection requests to. A value of 0 is not allowed. NAT implementations that do not permit different values for `ExternalPort` and `InternalPort` will return an error.

2.2.25.PortMappingProtocol

This variable represents the protocol of the port mapping. Possible values are TCP or UDP.

2.2.26.InternalClient

This variable represents the IP address or DNS host name of an internal client (on the residential LAN). Note that if the gateway does not support DHCP, it does not have to support DNS host names. Consequently, support for an IP address is mandatory and support for DNS host names is recommended. This value cannot be a wildcard (i.e. empty string). It must be possible to set the `InternalClient` to the broadcast IP address 255.255.255.255 for UDP mappings. This is to enable multiple NAT clients to use the same well-known port simultaneously.

Copyright International Organization for Standardization
Provided by IHS under license with ISO
No reproduction or networking permitted without license from IHS Not for Resale

2.2.27.PortMappingDescription

This is a string representation of a port mapping and is applicable for static and dynamic port mappings. The format of the description string is not specified and is application dependent. If specified, the description string can be displayed to a user via the UI of a control point, enabling easier management of port mappings. The description string for a port mapping (or a set of related port mappings) may or may not be unique across multiple instantiations of an application on multiple nodes in the residential LAN.

The purpose of NAT port mappings is 2-fold:

- To support the programmatic creation of static port mappings from any control point on the residential network to enable a majority of network services and applications that listen on well known ports.

- To support the programmatic creation of short-lived dynamic port mappings from any control point on the residential network for applications such as multiplayer games, Internet chat and Peer-to-Peer messaging that use external ports for short session-based communication.

A port mapping is essentially an 8-tuple of the type:

```
<PortMappingEnabled, PortMappingLeaseDuration, RemoteHost, ExternalPort,
InternalPort, PortMappingProtocol, InternalClient, PortMappingDescription>
```

The port mapping entry is used by clients to enable forwarding of inbound service requests, if NAT is used as the address translation mechanism between the residential (private) LAN and the Internet. Each 8-tuple configures NAT to listen for packets on the external interface of the **WANConnectionDevice** on behalf of a specific client and dynamically forward connection requests to that client.

If a firewall is co-resident on the gateway, it is assumed that the gateway will appropriately configure the firewall for the port mapping.

For example, a client on a residential LAN could run an HTTP server and configure the gateway to forward requests from specific hosts on the Internet (WAN) on specific WAN interfaces.

These mappings are represented as an array of entries.

Following details about NAT port mappings are worth noting:

Adding / Creating a New Port Mapping:

If the mapping contains a unique `ExternalPort` and `PortMappingProtocol` pair the addition will be successful, unless the NAT is out of resources.

Overwriting Previous / Existing Port Mappings:

If the `RemoteHost`, `ExternalPort`, `PortMappingProtocol` and `InternalClient` are exactly the same as an existing mapping, the existing mapping values for `InternalPort`, `PortMappingDescription`, `PortMappingEnabled` and `PortMappingLeaseDuration` are overwritten.

Rejecting a New Port Mapping:

In cases where the `RemoteHost`, `ExternalPort` and `PortMappingProtocol` are the same as an existing mapping, but the `InternalClient` is different, the `AddPortMapping` action is rejected with an appropriate error.

Add or Reject New Port Mapping behavior based on vendor implementation:

In cases where the `ExternalPort`, `PortMappingProtocol` and `InternalClient` are the same, but `RemoteHost` is different, the vendor can choose to support both mappings simultaneously, or reject the second mapping with an appropriate error.

Copyright International Organization for Standardization
Provided by IHS under license with ISO
No reproduction or networking permitted without license from IHS Not for Resale

2.2.28.Relationships Between State Variables

If `ConnectionStatus` is set to ***Unconfigured***, all other variables are set to their default values.

If `ConnectionStatus` is set to ***Disconnected*** following variables are set to their default values – `UpstreamMaxBitRate`, `DownstreamMaxBitRate`, `Uptime`, `PPPEncryptionProtocol`, `PPPCompressionProtocol`, `PPPAuthenticationProtocol`.

If `NATEnabled` is set to 0, other port mapping related set actions are essentially disabled. Get actions may still succeed.

For dynamic port mappings (i.e. port mappings with a finite lease duration), the `PortMappingLeaseDuration` variable counts down from the value set by the `AddPortMapping` action. The value counts down **independent** of the state of `PortMappingEnabled` for that specific port mapping. If a `GetGenericPortMappingEntry` or `GetSpecificPortMappingEntry` action is invoked, the remaining time on a port-mapping lease is returned to the control point. For example if a port mapping is added with a lease duration of 1500 seconds and `GetSpecificPortMappingEntry` is invoked on that port mapping 500 seconds later, `PortMappingLeaseDuration` will return 1000 as its value (+/- a few seconds accounting for clock drift). When `PortMappingLeaseDuration` counts to zero, the entry will be deleted by the IGD, **independent** of the state of `PortMappingEnabled` for that specific port mapping. The IGD will correspondingly modify local NAT (and firewall settings if appropriate) to stop forwarding packets as was specified in the deleted port mapping. This will also cause `PortMappingNumberOfEntries` to decrement by 1, which will be evented. Dynamic port mappings will not be automatically reinitiated by the IGD – it is the responsibility of a control point to reinstall the port mapping a few "threshold" seconds before the port mapping is set to expire (i.e. `PortMappingLeaseDuration` equals zero) to prevent service disruption. The value of "threshold" seconds is implementation dependent.

`PortMappingLeaseDuration` does not change for static port mappings (i.e. mappings with infinite lease duration) **independent** of the state of `PortMappingEnabled` variable.

Copyright International Organization for Standardization
Provided by IHS under license with ISO
No reproduction or networking permitted without license from IHS Not for Resale

2.3. Eventing and Moderation

Table 2: Event Moderation

Variable Name	Evented	Moderated Event	Max Event Rate[1]	Logical Combination	Min Delta per Event[2]
ConnectionType	No	No	N/A	N/A	N/A
PossibleConnectionTypes	Yes	No	N/A	N/A	N/A
ConnectionStatus	Yes	No	N/A	N/A	N/A
Uptime	No	No	N/A	N/A	N/A
UpstreamMaxBitRate	No	No	N/A	N/A	N/A
DownstreamMaxBitRate	No	No	N/A	N/A	N/A
LastConnectionError	No	No	N/A	N/A	N/A
AutoDisconnectTime	No	No	N/A	N/A	N/A
IdleDisconnectTime	No	No	N/A	N/A	N/A
WarnDisconnectDelay	No	No	N/A	N/A	N/A
RSIPAvailable	No	No	N/A	N/A	N/A
NATEnabled	No	No	N/A	N/A	N/A
UserName	No	No	N/A	N/A	N/A
Password	No	No	N/A	N/A	N/A
PPPEncryptionProtocol	No	No	N/A	N/A	N/A
PPPCompressionProtocol	No	No	N/A	N/A	N/A
PPPAuthenticationProtocol	No	No	N/A	N/A	N/A
ExternalIPAddress	Yes	No	N/A	N/A	N/A
PortMappingNumberOfEntries	Yes	No	N/A	N/A	N/A
PortMappingEnabled	No	No	N/A	N/A	N/A
PortMappingLeaseDuration	No	No	N/A	N/A	N/A
RemoteHost	No	No	N/A	N/A	N/A
ExternalPort	No	No	N/A	N/A	N/A
InternalPort	No	No	N/A	N/A	N/A
PortMappingProtocol	No	No	N/A	N/A	N/A
InternalClient	No	No	N/A	N/A	N/A
PortMappingDescription	No	No	N/A	N/A	N/A
Non-standard state variables implemented by an UPnP vendor go here.	*TBD*	*TBD*	*TBD*	*TBD*	*TBD*

[1] Determined by N, where Rate = (Event)/(N secs).
[2] (N) * (allowedValueRange Step).

2.3.1. Event Model

Eventing is self-explanatory. Clients use event updates on `ConnectionStatus` to provide local user feedback and manage connections initiated by local applications. None of the events are moderated.

Copyright International Organization for Standardization
Provided by IHS under license with ISO
No reproduction or networking permitted without license from IHS Not for Resale

2.4. Actions

Immediately following this table is detailed information about these actions, including short descriptions of the actions, the effects of the actions on state variables, and error codes defined by the actions.

Table 3: Actions

Name	Req. or Opt. [1]
SetConnectionType	R
GetConnectionTypeInfo	R
ConfigureConnection	O
RequestConnection	R
RequestTermination	O
ForceTermination	R
SetAutoDisconnectTime	O
SetIdleDisconnectTime	O
SetWarnDisconnectDelay	O
GetStatusInfo	R
GetLinkLayerMaxBitRates	R
GetPPPEncryptionProtocol	O
GetPPPCompressionProtocol	O
GetPPPAuthenticationProtocol	O
GetUserName	O
GetPassword	O
GetAutoDisconnectTime	O
GetIdleDisconnectTime	O
GetWarnDisconnectDelay	O
GetNATRSIPStatus	R
GetGenericPortMappingEntry	R
GetSpecificPortMappingEntry	R
AddPortMapping	R
DeletePortMapping	R
GetExternalIPAddress	R
Non-standard actions implemented by an UPnP vendor go here.	X

[1] R = Required, O = Optional, X = Non-standard.

Copyright International Organization for Standardization
Provided by IHS under license with ISO
No reproduction or networking permitted without license from IHS
Not for Resale

2.4.1. SetConnectionType

This action sets up a specific connection type. Clients on the LAN may initiate or share connection only after this action completes or `ConnectionType` is set to a value other than *Unconfigured*. `ConnectionType` can be a read-only variable in cases where some form of auto configuration is employed.

2.4.1.1. Arguments

Table 4: Arguments for `SetConnectionType`

Argument	Direction	relatedStateVariable
`NewConnectionType`	*IN*	`ConnectionType`

2.4.1.2. Dependency on State (if any)

2.4.1.3. Effect on State (if any)

This action sets the connection to a specific type.

2.4.1.4. Errors

errorCode	errorDescription	Description
402	Invalid Args	See UPnP Device Architecture section on Control.
501	Action Failed	See UPnP Device Architecture section on Control.
703	InactiveConnection StateRequired	Current value of `ConnectionStatus` should be either *Disconnected* or *Unconfigured* to permit this action.

2.4.2. GetConnectionTypeInfo

This action retrieves the values of the current connection type and allowable connection types.

2.4.2.1. Arguments

Table 5: Arguments for `GetConnectionTypeInfo`

Argument	Direction	relatedStateVariable
`NewConnectionType`	*OUT*	`ConnectionType`
`NewPossibleConnectionTypes`	*OUT*	`PossibleConnectionTypes`

2.4.2.2. Dependency on State (if any)

2.4.2.3. Effect on State (if any)

None.

2.4.2.4. Errors

errorCode	errorDescription	Description
402	Invalid Args	See UPnP Device Architecture section on Control.
501	Action Failed	See UPnP Device Architecture section on Control.

--`,,```,,,,````-`-`,,`,,`,`,,`---

Copyright International Organization for Standardization
Provided by IHS under license with ISO
No reproduction or networking permitted without license from IHS Not for Resale

2.4.3. ConfigureConnection

A client may send this command to configure a PPP connection on the WAN device and change `ConnectionStatus` to *Disconnected* from *Unconfigured*. By doing so, the client is implicitly allowing any other client in the residential network to initiate a connection using this configuration. The client may choose an instance of a connection service in the *Unconfigured* state and configure it, or change an existing configuration on a *Disconnected* connection. By passing NULL values for the parameters, this command may also be used to set the `ConnectionStatus` from *Disconnected* to *Unconfigured*.

NOTE: Gateway implementations may choose to keep sensitive information such as `Password` from being read by a client.

2.4.3.1. Arguments

Table 6: Arguments for `ConfigureConnection`

Argument	Direction	relatedStateVariable
`NewUserName`	*IN*	`UserName`
`NewPassword`	*IN*	`Password`

2.4.3.2. Dependency on State (if any)

2.4.3.3. Effect on State (if any)

This action creates a new connection profile for subsequent use in initiating a dialup session. This is very similar to creating a new connection icon on a user's PC. The gateway is expected to cache the state variable values for future use.

2.4.3.4. Errors

errorCode	errorDescription	Description
402	Invalid Args	See UPnP Device Architecture section on Control.
501	Action Failed	See UPnP Device Architecture section on Control.
703	InactiveConnection StateRequired	Current value of `ConnectionStatus` should be either *Disconnected* or *Unconfigured* to permit this action.
719	ActionDisallowed WhenAutoConfigE nabled	The specified action is not permitted when auto configuration is enabled on the modem

2.4.4. RequestConnection

A client sends this action to initiate a connection on an instance of a connection service that has a configuration already defined. `RequestConnection` causes the `ConnectionStatus` to immediately change to `Connecting` (if implemented) unless the action is not permitted in the current state of the IGD or the specific service instance. This change of state will be evented. `RequestConnection` should synchronously return at this time in accordance with UPnP architecture requirements that mandate that an action can take no more than 30 seconds to respond synchronously. However, the actual connection setup may take several seconds more to complete. For example, in the case of POTS dial-up connections, the `RequestConnection` action may trigger the IGD to dial several previously configured phone numbers in sequence and report a failure only if all connection attempts fail. If the connection setup is successful, `ConnectionStatus` will change to `Connected` and will be evented. If the connection setup is not successful, `ConnectionStatus` will eventually revert back to `Disconnected` and will be evented. `LastConnectionError` will be set appropriately in either case. While this may be obvious, it is worth noting that a control point must not source packets to the Internet until `ConnectionStatus` is updated to `Connected`, or the IGD may drop packets until it transitions to the `Connected` state. The following implementation guidelines are also worth noting:

Copyright International Organization for Standardization
Provided by IHS under license with ISO
No reproduction or networking permitted without license from IHS Not for Resale

- The IGD should implement a timeout mechanism to ensure that it does not remain in the `Connecting` state forever. The timeout values are implementation dependent.
- The IGD may take several seconds (or even a few minutes) to transition from the `Connecting` state to the `Connected` state. Control points should moderate the polling frequency of the `ConnectionStatus` variable on the IGD so as to not create data storms on the network.
- Control points should manage a timeout for initiated connections to recover from catastrophic failures on the IGD. The timeout values are implementation dependent.

See 'Theory of Operation' section below for more details.

2.4.4.1. Arguments

This action does not have any arguments.

2.4.4.2. Dependency on State (if any)

2.4.4.3. Effect on State (if any)

If successful, `ConnectionStatus` is changed to Connected.

2.4.4.4. Errors

errorCode	errorDescription	Description
402	Invalid Args	See UPnP Device Architecture section on Control.
704	ConnectionSetupFailed	There was a failure in setting up the IP or PPP connection with the service provider. See `LastConnectionError` for more details
705	ConnectionSetupInProgress	The connection is already in the process of being setup.
706	ConnectionNotConfigured	Current `ConnectionStatus` is *Unconfigured*
707	DisconnectInProgress	The connection is in the process of being torn down.
708	InvalidLayer2Address	Corresponding Link Config service has an invalid VPI/VCI or phone number.
709	InternetAccessDisabled	The `EnabledForInternet` flag is set to 0.
710	InvalidConnectionType	This action is not permitted for the specified `ConnectionType`.

2.4.5. RequestTermination

A client may send this command to any connection instance in *Connected, Connecting* or *Authenticating* state to change `ConnectionStatus` to *Disconnected*. Connection state changes to *PendingDisconnect* depending on the value of `WarnDisconnectDelay` variable. Connection termination will depend on whether other clients intend to continue to use the connection. The process of terminating a connection is described in Theory of Operation section.

2.4.5.1. Arguments

This action does not have any arguments.

2.4.5.2. Dependency on State (if any)

2.4.5.3. Effect on State (if any)

If successful, `ConnectionStatus` is changed to Disconnected.

Copyright International Organization for Standardization
Provided by IHS under license with ISO
No reproduction or networking permitted without license from IHS Not for Resale

2.4.5.4. Errors

errorCode	errorDescription	Description
402	Invalid Args	See UPnP Device Architecture section on Control.
501	Action Failed	See UPnP Device Architecture section on Control.
707	DisconnectInProgress	The connection is in the process of being torn down.
710	InvalidConnectionType	This command is valid only when `ConnectionType` is *IP-Routed*
711	ConnectionAlreadyTerminated	An attempt was made to terminate a connection that is no longer active.

2.4.6. ForceTermination

A client may send this command to any connection instance in *Connected, Connecting, Authenticating, PendingDisconnect or Disconnecting* state to change `ConnectionStatus` to *Disconnected*. Connection state immediately transitions to *Disconnected* irrespective of the setting of `WarnDisconnectDelay` variable. The process of terminating a connection is described in Theory of Operation section.

2.4.6.1. Arguments

This action does not have any arguments.

2.4.6.2. Dependency on State (if any)

2.4.6.3. Effect on State (if any)

If successful, `ConnectionStatus` is changed to Disconnected.

2.4.6.4. Errors

errorCode	errorDescription	Description
402	Invalid Args	See UPnP Device Architecture section on Control.
501	Action Failed	See UPnP Device Architecture section on Control.
707	DisconnectInProgress	The connection is in the process of being torn down.
710	InvalidConnectionType	This command is valid only when `ConnectionType` is *IP-Routed*
711	ConnectionAlreadyTerminated	An attempt was made to terminate a connection that is no longer active.

2.4.7. SetAutoDisconnectTime

This action sets the time (in seconds) after which an active connection is automatically disconnected.

2.4.7.1. Arguments

Table 7: Arguments for `SetAutoDisconnectTime`

Argument	Direction	relatedStateVariable
`NewAutoDisconnectTime`	*IN*	`AutoDisconnectTime`

Copyright International Organization for Standardization
Provided by IHS under license with ISO
No reproduction or networking permitted without license from IHS Not for Resale

2.4.7.2. Dependency on State (if any)

2.4.7.3. Effect on State (if any)

After expiration of specified time, `ConnectionStatus` is changed to Disconnected.

2.4.7.4. Errors

errorCode	errorDescription	Description
402	Invalid Args	See UPnP Device Architecture section on Control.
501	Action Failed	See UPnP Device Architecture section on Control.

2.4.8. SetIdleDisconnectTime

This action specifies the idle time (in seconds) after which a connection may be disconnected. The actual disconnect will occur after `WarnDisconnectDelay` time elapses.

2.4.8.1. Arguments

Table 8: Arguments for `SetIdleDisconnectTime`

Argument	Direction	relatedStateVariable
`NewIdleDisconnectTime`	*IN*	`IdleDisconnectTime`

2.4.8.2. Dependency on State (if any)

2.4.8.3. Effect on State (if any)

After the time specified in seconds expires, connection termination is initiated. The intermediate connection states before the connection is terminated will depend on `WarnDisconnectDelay`.

2.4.8.4. Errors

errorCode	errorDescription	Description
402	Invalid Args	See UPnP Device Architecture section on Control.
501	Action Failed	See UPnP Device Architecture section on Control.

2.4.9. SetWarnDisconnectDelay

This action specifies the number of seconds of warning to each (potentially) active user of a connection before a connection is terminated.

2.4.9.1. Arguments

Table 9: Arguments for `SetWarnDisconnectDelay`

Argument	Direction	relatedStateVariable
`NewWarnDisconnectDelay`	*IN*	`WarnDisconnectDelay`

2.4.9.2. Dependency on State (if any)

2.4.9.3. Effect on State (if any)

After the time specified in seconds expires, the connection is terminated.

Copyright International Organization for Standardization
Provided by IHS under license with ISO
No reproduction or networking permitted without license from IHS Not for Resale

2.4.9.4. Errors

errorCode	errorDescription	Description
402	Invalid Args	See UPnP Device Architecture section on Control.
501	Action Failed	See UPnP Device Architecture section on Control.

2.4.10.GetStatusInfo

This action retrieves the values of state variables pertaining to connection status.

2.4.10.1. Arguments

Table 10: Arguments for `GetStatusInfo`

Argument	Direction	relatedStateVariable
NewConnectionStatus	*OUT*	ConnectionStatus
NewLastConnectionError	*OUT*	LastConnectionError
NewUptime	*OUT*	Uptime

2.4.10.2.Dependency on State (if any)

2.4.10.3.Effect on State (if any)

None.

2.4.10.4.Errors

errorCode	errorDescription	Description
402	Invalid Args	See UPnP Device Architecture section on Control.

2.4.11.GetLinkLayerMaxBitRates

This action retrieves the maximum upstream and downstream bit rates for the connection.

2.4.11.1. Arguments

Table 11: Arguments for `GetLinkLayerMaxBitRates`

Argument	Direction	relatedStateVariable
NewUpstreamMaxBitRate	*OUT*	UpstreamMaxBitRate
NewDownstreamMaxBitRate	*OUT*	DownstreamMaxBitRate

2.4.11.2.Dependency on State (if any)

2.4.11.3.Effect on State (if any)

None.

Copyright International Organization for Standardization
Provided by IHS under license with ISO
No reproduction or networking permitted without license from IHS Not for Resale

2.4.11.4.Errors

errorCode	errorDescription	Description
402	Invalid Args	See UPnP Device Architecture section on Control.

2.4.12.GetPPPEncryptionProtocol

This action retrieves the link layer (PPP) encryption protocol used for this connection.

2.4.12.1.Arguments

Table 12: Arguments for `GetPPPEncryptionProtocol`

Argument	Direction	relatedStateVariable
`NewPPPEncryptionProtocol`	*OUT*	`PPPEncryptionProtocol`

2.4.12.2.Dependency on State (if any)

2.4.12.3.Effect on State (if any)

None.

2.4.12.4.Errors

errorCode	errorDescription	Description
402	Invalid Args	See UPnP Device Architecture section on Control.
501	Action Failed	See UPnP Device Architecture section on Control.

2.4.13.GetPPPCompressionProtocol

This action retrieves the link layer (PPP) compression protocol used for this connection.

2.4.13.1.Arguments

Table 13: Arguments for `GetPPPCompressionProtocol`

Argument	Direction	relatedStateVariable
`NewPPPCompressionProtocol`	*OUT*	`PPPCompressionProtocol`

2.4.13.2.Dependency on State (if any)

2.4.13.3.Effect on State (if any)

None.

2.4.13.4.Errors

errorCode	errorDescription	Description
402	Invalid Args	See UPnP Device Architecture section on Control.
501	Action Failed	See UPnP Device Architecture section on Control.

2.4.14.GetPPPAuthenticationProtocol

This action retrieves the link layer (PPP) authentication protocol for this connection.

--`,,```,,,,````-`-`,,`,,`,`,,`---
Copyright International Organization for Standardization
Provided by IHS under license with ISO
No reproduction or networking permitted without license from IHS Not for Resale

2.4.14.1.Arguments

Table 14: Arguments for `GetPPPAuthenticationProtocol`

Argument	Direction	relatedStateVariable
NewPPPAuthenticationProtocol	*OUT*	PPPAuthenticationProtocol

2.4.14.2.Dependency on State (if any)

2.4.14.3.Effect on State (if any)

None.

2.4.14.4.Errors

errorCode	errorDescription	Description
402	Invalid Args	See UPnP Device Architecture section on Control.
501	Action Failed	See UPnP Device Architecture section on Control.

2.4.15.GetUserName

This action retrieves the user name used for the activation of a connection.

2.4.15.1.Arguments

Table 15: Arguments for `GetuserName`

Argument	Direction	relatedStateVariable
NewUserName	*OUT*	UserName

2.4.15.2.Dependency on State (if any)

2.4.15.3.Effect on State (if any)

None.

2.4.15.4.Errors

errorCode	errorDescription	Description
402	Invalid Args	See UPnP Device Architecture section on Control.

2.4.16.GetPassword

This action retrieves the password used for the activation of a connection.

2.4.16.1.Arguments

Table 16: Arguments for `GetPassword`

Argument	Direction	relatedStateVariable
NewPassword	*OUT*	Password

--`,,```,,,,````-`-`,,`,,`,`,,`---

Copyright International Organization for Standardization
Provided by IHS under license with ISO
No reproduction or networking permitted without license from IHS Not for Resale

2.4.16.2.Dependency on State (if any)

2.4.16.3.Effect on State (if any)

None.

2.4.16.4.Errors

errorCode	errorDescription	Description
402	Invalid Args	See UPnP Device Architecture section on Control.

2.4.17.GetAutoDisconnectTime

This action retrieves the time (in seconds) after which an active connection is automatically disconnected.

2.4.17.1.Arguments

Table 17: Arguments for `GetAutoDisconnectTime`

Argument	Direction	relatedStateVariable
NewAutoDisconnectTime	*OUT*	AutoDisconnectTime

2.4.17.2.Dependency on State (if any)

2.4.17.3.Effect on State (if any)

None.

2.4.17.4.Errors

errorCode	errorDescription	Description
402	Invalid Args	See UPnP Device Architecture section on Control.

2.4.18.GetIdleDisconnectTime

This action retrieves the idle time (in seconds) after which a connection may be disconnected.

2.4.18.1.Arguments

Table 18: Arguments for `GetIdleDisconnectTime`

Argument	Direction	relatedStateVariable
NewIdleDisconnectTime	*OUT*	IdleDisconnectTime

2.4.18.2.Dependency on State (if any)

2.4.18.3.Effect on State (if any)

None.

Copyright International Organization for Standardization
Provided by IHS under license with ISO
No reproduction or networking permitted without license from IHS Not for Resale

2.4.18.4.Errors

errorCode	errorDescription	Description
402	Invalid Args	See UPnP Device Architecture section on Control.

2.4.19.GetWarnDisconnectDelay

This action retrieves the number of seconds of warning to each (potentially) active user of a connection before a connection is terminated.

2.4.19.1.Arguments

Table 19: Arguments for `GetWarnDisconnectDelay`

Argument	Direction	relatedStateVariable
`NewWarnDisconnectDelay`	*OUT*	`WarnDisconnectDelay`

2.4.19.2.Dependency on State (if any)

2.4.19.3.Effect on State (if any)

None.

2.4.19.4.Errors

errorCode	errorDescription	Description
402	Invalid Args	See UPnP Device Architecture section on Control.

2.4.20.GetNATRSIPStatus

This action retrieves the current state of NAT and RSIP on the gateway for this connection.

2.4.20.1.Arguments

Table 20: Arguments for `GetNATRSIPStatus`

Argument	Direction	relatedStateVariable
`NewRSIPAvailable`	*OUT*	`RSIPAvailable`
`NewNATEnabled`	*OUT*	`NATEnabled`

2.4.20.2.Dependency on State (if any)

2.4.20.3.Effect on State (if any)

None.

2.4.20.4.Errors

errorCode	errorDescription	Description
402	Invalid Args	See UPnP Device Architecture section on Control.

Copyright International Organization for Standardization
Provided by IHS under license with ISO
No reproduction or networking permitted without license from IHS Not for Resale

2.4.21.GetGenericPortMappingEntry

This action retrieves NAT port mappings one entry at a time. Control points can call this action with an incrementing array index until no more entries are found on the gateway. If `PortMappingNumberOfEntries` is updated during a call, the process may have to start over. Entries in the array are contiguous. As entries are deleted, the array is compacted, and the evented variable `PortMappingNumberOfEntries` is decremented. Port mappings are logically stored as an array on the IGD and retrieved using an array index ranging from 0 to `PortMappingNumberOfEntries-1`.

2.4.21.1.Arguments

Table 21: Arguments for `GetGenericPortMappingEntry`

Argument	Direction	relatedStateVariable
`NewPortMappingIndex`	*IN*	`PortMappingNumberOfEntries`
`NewRemoteHost`	*OUT*	`RemoteHost`
`NewExternalPort`	*OUT*	`ExternalPort`
`NewProtocol`	*OUT*	`PortMappingProtocol`
`NewInternalPort`	*OUT*	`InternalPort`
`NewInternalClient`	*OUT*	`InternalClient`
`NewEnabled`	*OUT*	`PortMappingEnabled`
`NewPortMappingDescription`	*OUT*	`PortMappingDescription`
`NewLeaseDuration`	*OUT*	`PortMappingLeaseDuration`

2.4.21.2.Dependency on State (if any)

2.4.21.3.Effect on State (if any)

None.

2.4.21.4.Errors

errorCode	errorDescription	Description
402	Invalid Args	See UPnP Device Architecture section on Control.
713	SpecifiedArrayIndexInvalid	The specified array index is out of bounds

Copyright International Organization for Standardization
Provided by IHS under license with ISO
No reproduction or networking permitted without license from IHS Not for Resale

2.4.22.GetSpecificPortMappingEntry

This action reports the Static Port Mapping specified by the unique tuple of `RemoteHost`, `ExternalPort` and `PortMappingProtocol`.

2.4.22.1.Arguments

Table 22: Arguments for `GetSpecificPortMappingEntry`

Argument	Direction	relatedStateVariable
`NewRemoteHost`	*IN*	`RemoteHost`
`NewExternalPort`	*IN*	`ExternalPort`
`NewProtocol`	*IN*	`PortMappingProtocol`
`NewInternalPort`	*OUT*	`InternalPort`
`NewInternalClient`	*OUT*	`InternalClient`
`NewEnabled`	*OUT*	`PortMappingEnabled`
`NewPortMappingDescription`	*OUT*	`PortMappingDescription`
`NewLeaseDuration`	*OUT*	`PortMappingLeaseDuration`

2.4.22.2.Dependency on State (if any)

2.4.22.3.Effect on State (if any)

None.

2.4.22.4.Errors

errorCode	errorDescription	Description
402	Invalid Args	See UPnP Device Architecture section on Control.
714	NoSuchEntryInArray	The specified value does not exist in the array

2.4.23.AddPortMapping

This action creates a new port mapping or overwrites an existing mapping with the same internal client. If the `ExternalPort` and `PortMappingProtocol` pair is already mapped to another internal client, an error is returned.

NOTE: Not all NAT implementations will support:

- Wildcard value (i.e. 0) for `ExternalPort`
- `InternalPort` values that are different from `ExternalPort`
- Dynamic port mappings i.e. with non-Infinite `PortMappingLeaseDuration`

Copyright International Organization for Standardization
Provided by IHS under license with ISO
No reproduction or networking permitted without license from IHS
Not for Resale

2.4.23.1.Arguments

Table 23: Arguments for `AddPortMapping`

Argument	Direction	relatedStateVariable
`NewRemoteHost`	*IN*	`RemoteHost`
`NewExternalPort`	*IN*	`ExternalPort`
`NewProtocol`	*IN*	`PortMappingProtocol`
`NewInternalPort`	*IN*	`InternalPort`
`NewInternalClient`	*IN*	`InternalClient`
`NewEnabled`	*IN*	`PortMappingEnabled`
`NewPortMappingDescription`	*IN*	`PortMappingDescription`
`NewLeaseDuration`	*IN*	`PortMappingLeaseDuration`

2.4.23.2.Dependency on State (if any)

2.4.23.3.Effect on State (if any)

None.

2.4.23.4.Errors

errorCode	errorDescription	Description
402	Invalid Args	See UPnP Device Architecture section on Control.
501	Action Failed	See UPnP Device Architecture section on Control.
715	WildCardNotPermittedInSrcIP	The source IP address cannot be wild-carded
716	WildCardNotPermittedInExtPort	The external port cannot be wild-carded
718	ConflictInMappingEntry	The port mapping entry specified conflicts with a mapping assigned previously to another client
724	SamePortValuesRequired	Internal and External port values must be the same
725	OnlyPermanentLeasesSupported	The NAT implementation only supports permanent lease times on port mappings
726	RemoteHostOnlySupportsWildcard	RemoteHost must be a wildcard and cannot be a specific IP address or DNS name
727	ExternalPortOnlySupportsWildcard	ExternalPort must be a wildcard and cannot be a specific port value

Copyright International Organization for Standardization
Provided by IHS under license with ISO
No reproduction or networking permitted without license from IHS Not for Resale

2.4.24.DeletePortMapping

This action deletes a previously instantiated port mapping. As each entry is deleted, the array is compacted, and the evented variable `PortMappingNumberOfEntries` is decremented.

2.4.24.1.Arguments

Table 24: Arguments for `DeletePortMapping`

Argument	Direction	relatedStateVariable
`NewRemoteHost`	*IN*	`RemoteHost`
`NewExternalPort`	*IN*	`ExternalPort`
`NewProtocol`	*IN*	`PortMappingProtocol`

2.4.24.2.Dependency on State (if any)

2.4.24.3.Effect on State (if any)

Inbound connections are no longer permitted on the port mapping being deleted.

2.4.24.4.Errors

errorCode	errorDescription	Description
402	Invalid Args	See UPnP Device Architecture section on Control.
714	NoSuchEntryInArray	The specified value does not exist in the array

2.4.25.GetExternalIPAddress

This action retrieves the value of the external IP address on this connection instance.

2.4.25.1.Arguments

Table 25: Arguments for `GetExternalIPAddress`

Argument	Direction	relatedStateVariable
`NewExternalIPAddress`	*OUT*	`ExternalIPAddress`

2.4.25.2.Dependency on State (if any)

2.4.25.3.Effect on State (if any)

None.

2.4.25.4.Errors

errorCode	errorDescription	Description
402	Invalid Args	See UPnP Device Architecture section on Control.
501	Action Failed	See UPnP Device Architecture section on Control.

Copyright International Organization for Standardization
Provided by IHS under license with ISO
No reproduction or networking permitted without license from IHS Not for Resale

2.4.26.Non-Standard Actions Implemented by a UPnP Vendor

To facilitate certification, non-standard actions implemented by UPnP vendors should be included in this service template. The UPnP Device Architecture lists naming requirements for non-standard actions (see the section on Description).

2.4.27.Relationships Between Actions

Actions initiated by a client may have different results depending on whether the state of the gateway was changed as a result of another client's actions. For example, the action `RequestConnection` might not be successful in changing the `ConnectionStatus` to *Connected* if the gateway receives `RequestTermination` on the same connection (while it is in the process of connecting) from another client.

2.4.28.Common Error Codes

The following table lists error codes common to actions for this service type. If an action results in multiple errors, the most specific error should be returned.

Table 26: Common Error Codes

errorCode	errorDescription	Description
401	Invalid Action	See UPnP Device Architecture section on Control.
402	Invalid Args	See UPnP Device Architecture section on Control.
404	Invalid Var	See UPnP Device Architecture section on Control.
501	Action Failed	See UPnP Device Architecture section on Control.
600-699	TBD	Common action errors. Defined by UPnP Forum Technical Committee.
701-799		Common action errors defined by the UPnP Forum working committees.
800-899	*TBD*	*(Specified by UPnP vendor.)*

Copyright International Organization for Standardization
Provided by IHS under license with ISO
No reproduction or networking permitted without license from IHS Not for Resale

2.5. Theory of Operation

When a ***WANDevice*** is initialized, it is initialized with one or more instances of ***WANConnectionDevice*** depending on the number of physical links (VCs for DSL, ISPs for POTS) the gateway is configured to support. Note that in the case of POTS only one of ***WANConnectionDevice*** instances can be operational at a time. One or more instances of ***WANPPPConnection*** service will be initialized depending on the static number of maximum PPP configurations supported on the ***WANConnectionDevice***. In the case of DSL for example, more than one ***WANConnectionDevice*** instance (PPP connection) can be active at a time on the same VC. Even in the case of POTS, the gateway implementation may choose to initialize more than one instance of ***WANPPPConnection*** service even though the interface supports only one connection at a time.

Figure 1 below illustrates the steps a control point goes through to initiate or share Internet connections. Note that for POTS connections, the `ConnectionType` variable will typically be preset to *IP_Routed*.

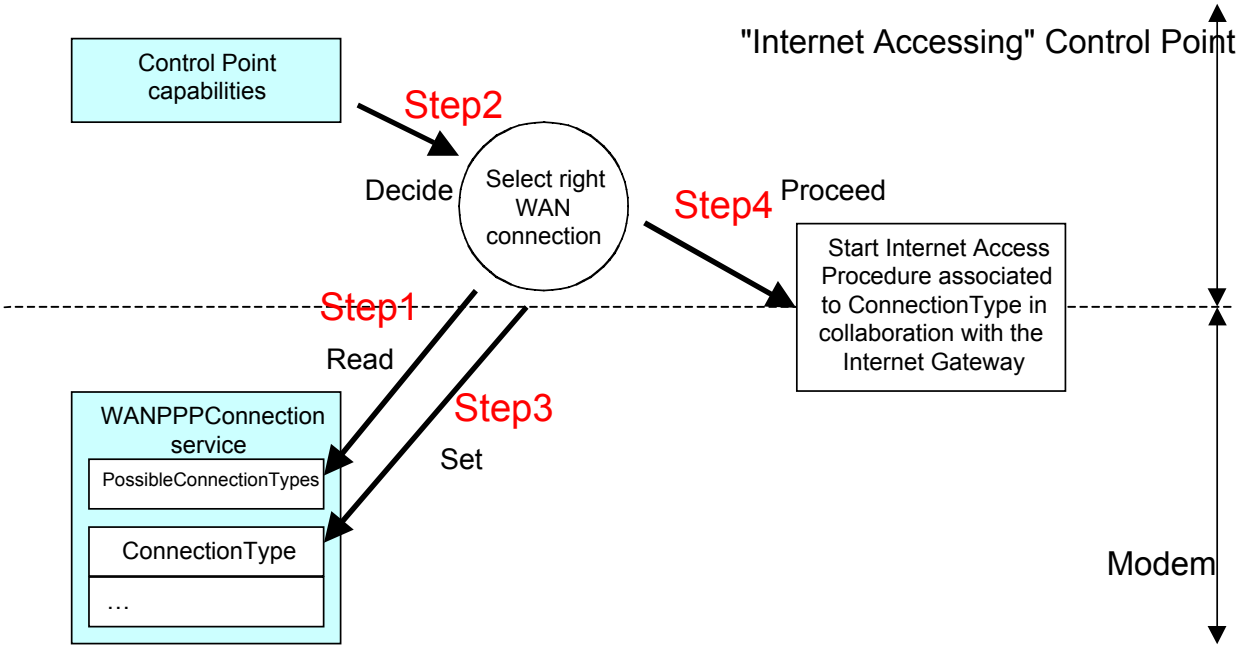

Figure 1 Connection Initiation Steps

1. A control point that wants to access Internet first scans the different ***WANPPPConnection*** service instances and retrieves the `PossibleConnectionTypes` and `ConnectionType` variables for each service.

   For each scanned connection, the control point first checks `ConnectionType` to see if the connection is already configured. If the connection is configured (the `ConnectionType` value is not *Unconfigured*), it checks if the *Connection Procedure* associated with the current value of `ConnectionType` is convenient and if the connection is really available (by checking `ConnectionStatus`).

   If the connection is not configured, the control point matches the values in `PossibleConnectionTypes` against the values corresponding to *Connection Procedures* it can support and it is interested in.

2. If `PossibleConnectionTypes` contains such a value, it selects it by setting the variable `ConnectionType`.

3. The control point then starts the *Connection Procedure* associated with the chosen `ConnectionType` value.

   The *Connection Procedures* associated to each value of `ConnectionType` are described in the table below. The table can be understood with the following algorithm:

Copyright International Organization for Standardization
Provided by IHS under license with ISO
No reproduction or networking permitted without license from IHS
Not for Resale

```
If(PossibleConnectionTypes contains value in Column 1) and
(CP capabilities supports the corresponding value in Column 2) and
(CP wants to use this connection)
{
      set ConnectionType to value in Column 1.
      do list of elementary tasks in column 4.
}
```

Connection Procedures

Value of ConnectionType	Control point capabilities	Step N°	Follow-up steps for control point
IP_Routed	IP Stack	1	Set the default gateway address to the Internet Gateway address
		2	Send IP packets through the gateway
PPTP_Relay	PPTP client	1	Open a PPTP tunnel to gateway and send IP packets over it.
L2TP_Relay	L2TP client	1	Open a L2TP tunnel to gateway and send IP packets over it.
PPPoE_Relay	PPPoE client	1	Open a PPPoE tunnel (to gateway) and send IP packets over it.
PPPoE_Bridged	PPPoE client	1	Open a PPPoE tunnel (to ISP) and send IP packets into it.
DHCP_Spoofed	DHCP client + IP Stack	1	Send a DHCP request and wait for the answer.
		2	Send IP packets through the Internet Gateway

Specific connection related actions are now described in greater detail.

2.5.1. Connection Initiation

A UPnP client sends the `RequestConnection` action to a specific instance of the ***WANPPPConnection*** service on a particular ***WANConnectionDevice***.to inform the gateway of its intent to use Internet access.

A UPnP client initiates a PPP connection in one of the following ways

- `ConfigureConnection` command followed by `RequestConnection` to a connection instance in the *Unconfigured* connection state. In this case the configuration would be available for other clients to use, if it is not explicitly cleared from the SST when the connection becomes *Disconnected*.
- `RequestConnection` command to a *Disconnected* (but configured) connection.

A client desiring to use an already active connection would send the `RequestConnection` command to a specific instance of ***WANPPPConnection*** service that is *Connected*.

If this command is sent to a connection that is not previously configured or improperly configured, the client will be notified with an appropriate error code. This is also the case if the ***WANPPPConnection*** service is used to request a connection before the corresponding Link Configuration service is configured - For e.g., VC info in ***WANDSLLinkConfig*** service for DSL, Phone number in ***WANPOTSLinkConfig*** service for POTS.

Figure 2 below illustrates the state transition diagram when all states are implemented by the gateway. Required states are in shaded ovals.
When a client sends a `RequestConnection` command to a *Disconnected* (but configured) connection, the ***WANConnectionDevice*** initiates the connection to ISP may transition through optional intermediate connection

--`,,```,,,,````-`-`,,`,,`,`,,`---

Copyright International Organization for Standardization
Provided by IHS under license with ISO
No reproduction or networking permitted without license from IHS Not for Resale

states (*Authenticating* and *Connecting*) and eventing on these states is implementation dependent. Depending on whether the connection is successful, `ConnectionStatus` is changed to *Connected* or *Disconnected*. A client may retrieve `LastConnectionError` in case of connection failure.

When a connection service gets a `RequestConnection` command, if the `ConnectionStatus` is:

- *Connecting, Authenticating* or *Disconnecting:* an error is returned.
- *Disconnected:* a connection is attempted (`ConnectionStatus` may transition to *Connecting)*. If this is successful, `ConnectionStatus` changes to *Connected.*
- *PendingDisconnect:* it is changed to *Connected.*
- *Connected*: the client is allowed to use the connection if `ConnectionType` is *IP_routed,* otherwise an error is returned.

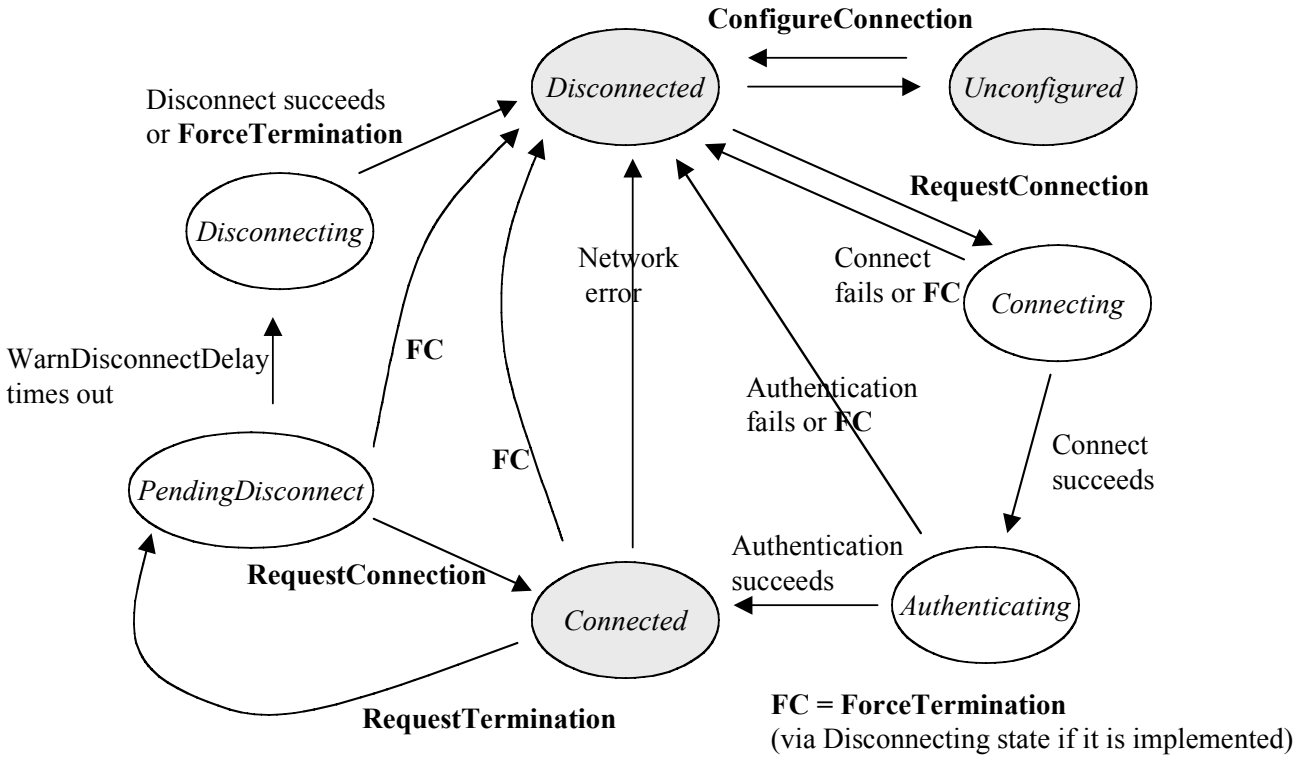

Figure 2 – State Diagram for PPP Connections

`RequestConnection` may fail (causing an error code to be returned) under the following conditions:

1. Network failure in reaching the ISP
2. ISP login failure
3. `ConnectionStatus` is *Connecting, Authenticating* or *Unconfigured*
4. Corresponding Link interface configuration service was not yet configured
5. `EnabledForInternet` variable in ***WANCommonInterfaceConfig*** is set to 0 (false)

`LastConnectionError` will indicate the cause of error if connection setup fails due to error conditions 1 or 2 above.

The connection set up may be aborted by a client (by issuing `RequestTermination` or `ForceTermination`)

Copyright International Organization for Standardization
Provided by IHS under license with ISO
No reproduction or networking permitted without license from IHS
Not for Resale

2.5.2. Connection Termination

Connection Termination can be explicit (by a client sending `RequestTermination` or `ForceTermination` action) or implicit (because of `AutoDisconnectTime` or `IdleDisconnectTime` coming into effect).

A UPnP client sends `RequestTermination` or `ForceTermination` action to a specific instance of the ***WANPPPConnection*** service on a particular ***WANConnectionDevice*** to inform the gateway that the PPP connection to the Internet should be terminated.

A connection termination may be initiated due to:

1. A `RequestTermination` or `ForceTermination` command from a client
2. `AutoDisconnectTime` or `IdleDisconnectTime` coming into effect
3. A deployment specific Gateway policy
4. `EnabledForInternet` variable (in ***WANCommonInterfaceConfig*** service) being set to 0
5. An ISP initiated connection termination or network failure

At this point `ConnectionStatus` transitions (resulting in notification to clients registered for this event) immediately to one of the following:

- *PendingDisconnect* (if `RequestTermination` is implemented in the gateway and called by a client): This occurs if `WarnDisconnectDelay` is non-zero and the cause for termination is 1 or 2 (as mentioned above). The PPP connection is still active in this state. This is useful for giving clients using a connection a chance to react when a connection termination is in progress. If the termination is due to a Gateway policy (3 above), a specific implementation of the Gateway may chose to warn the clients by transitioning to this state.
    - If clients choose to ignore the notification, the connection will be terminated after the time (in seconds) specified as `WarnDisconnectDelay`. `ConnectionStatus` transitions to *Disconnecting.*
    - If *any* client sends `RequestConnection` command at this point, the gateway MAY choose to discontinue the termination process by changing `ConnectionStatus` to *Connected.* If connection is not restored, the gateway will return error code indicating that the connection was in the process of being torn down.
- *Disconnecting* –this can happen in the following cases –
    - `ForceTermination` command was called
    - `RequestTermination` called, and if no other clients are using the connection, the gateway may choose to skip *PendingDisconnect* state.
    - `WarnDisconnectDelay` is zero and the cause for termination is `RequestTermination` or 2 (as mentioned above).
    - termination was triggered by `EnabledForInternet` variable being set to 0
    - termination was triggered by ISP
    - termination occurred due to a Gateway policy, and the specific implementation chose not to warn the clients by switching directly to this state – essentially overriding the value of WarnDisconnectDelay.

  When transitioning to this state, the PPP connection is inactive immediately.
- *Disconnected* – if the above two optional states are not implemented.

If the connection state is *Connecting* when a client issues a RequestTermination, the state transitions to *Disconnected* directly – it does not go to *PendingDisconnect* even if WarnDisconnectDelay is non-zero.

As mentioned before, in the case of termination because of a Gateway policy the action (whether clients are warned or not) depends upon the gateway implementation.

When a client receives a *PendingDisconnect* notification, it can do one of two things:

- Ignore it and let the disconnect proceed
- Send a `RequestConnection` command – the client can keep the connection from disconnecting – this is implementation dependent as pointed out earlier.

Copyright International Organization for Standardization
Provided by IHS under license with ISO
No reproduction or networking permitted without license from IHS Not for Resale

2.5.3. Connection Scenarios

As previously mentioned, the possible connection types for a ***WANPPPConnection*** are *IP_Routed*, *DHCP_Spoofed*, *PPPoE_Bridged*, *PPTP_Relay*, *L2TP_Relay*, and *PPPoE_Relay*. The connection scenarios for these different types of connections and the role of connection related actions are described in more detail below.

2.5.3.1. IP_Routed

In this scenario, some pre-configuration may be required for a ***WANPPPConnection***. A control point (CP) may use the `ConfigureConnection` (optional) action to setup the connection parameters such as *username* and *password*.
If the IP_Routed connection is the default connection on the IGD a CP on the LAN that desires to use the connection is not required to send the `RequestConnection` action even if the connection is not *active*. If the connection is configured but *inactive*, the IGD will initiate a WAN connection upon receiving any outbound packets from the CP (assuming the 'dial-on-demand' option is enabled on the IGD) **or** upon receiving a `RequestConnection` action. This may translate to a PPP connection setup and configuration via IP Configuration Protocol (IPCP). It results in a transition of `ConnectionStatus` to *active*. The IGD shares the routable WAN IP address with CPs on the LAN using Network Address Translation (NAT). The CPs on the LAN are assigned private IP addresses in response to their DHCP requests (CPs may self-assign non-routable IP addresses in certain IGD configurations).
If the IGD supports multiple WAN connection instances, the `RequestConnection` action is intended for a CP to specify a ***WANPPPConnection*** instance (that in all likelihood is different from the default connection). A CP may use `RequestTermination` or `ForceTermination` to disconnect the IGD from the WAN (this involves releasing any previously acquired IP resources from the ISP).

RequestTermination: A CP can invoke this action, if available, to terminate an *active* connection. As an example, if three CPs were sharing a WAN connection instance and if each were to call `RequestTermination`, the IGD may release IP resources acquired from the ISP on the three instances of `RequestTermination` to conserve IP resources. If *WarnDisconnectDelay* is implemented and is non-zero the IGD is required to change the `ConnectionStatus` from *Connected* to *PendingDisconnect* and wait until *WarnDisconnectDelay* seconds elapse before transitioning to the *Disconnected* state.

ForceTermination: The IGD will immediately release all WAN IP resources, disregarding the value of *WarnDisconnectDelay* variable.

An example of an implementation of this connection type is an IGD modeling a PC or embedded gateway with a POTS modem as a WAN interface.

2.5.3.2. DHCP_Spoofed

This scenario may require some a priori configuration that is similar to the IP_Routed case. It is mostly applicable to cases where the WAN connection type is PPP and LAN connections are based on IP. If this is the default connection instance, a CP on the LAN need not invoke the `RequestConnection` action prior to initiating any communication to the WAN, even if the `ConnectionStatus` is not *active*. The IP address obtained via IPCP or DHCP from the ISP is relayed back as a DHCP response to a CP on the LAN. The IP address may be obtained a priori (as would be the case for "always-on" connections) or may be obtained via a dial-on-demand connection. The relaying of the routable IP address to a CP results in the transition of `ConnectionStatus` to *active*. Subsequently, the IGD essentially forwards packets to and from the CP. If a connection were already *active*, the CP is returned a private IP address for its DHCP request – this implies that that CP would be unable to communicate to nodes on the WAN. This connection type essentially creates an implicit one-to-one binding between a CP on the LAN and a routable IP address on the WAN, making it virtually impossible for other CPs to share the connection. Furthermore, a CP that supports DHCP_Spoofed connections must support dual-homing with the other "interface" bound to an appropriate private IP address to be able to continue IP (UPnP) communications with the IGD after it is assigned a routable IP address. A CP that is actively using a DHCP_Spoofed connection may issue a `RequestTermination` or `ForceTermination` action through a secondary interface (if the CP is multi-homed) to end the use of this connection. Alternatively, a CP that is not using the connection may issue `RequestTermination` or `ForceTermination` to disconnect the IGD from the WAN. The termination actions result in `ConnectionStatus` being changed to *inactive* - ceasing packet flow on the link. Also, it is assumed that

--`,,```,,,,````-`-`,,`,,`,`,,`---

Copyright International Organization for Standardization
Provided by IHS under license with ISO
No reproduction or networking permitted without license from IHS
Not for Resale

the IGD is capable of source address based routing, necessitated by the implicit mapping of a CP to a WAN IP address.

If this were not the default connection, the CP may get a private IP address for a normal DHCP request. The CP may then use the `RequestConnection` action to notify the IGD that it intends to reserve the DHCP_Spoofed WAN connection to itself. If the connection is already a*ctive*, IGD returns an **error**. If this action is successful, when the CP resends its DHCP request it will be assigned a routable WAN IP address. Ending the use of the connection would require the CP to issue `RequestTermination` or `ForceTermination` as mentioned before.
An example of an implementation of this scenario would be an IGD with an integrated DSL modem on the WAN interface that implements PPPoA on one of its virtual circuits.

2.5.3.3. PPPoE_Bridged

In this scenario, the CP on the LAN initiates a PPP session to the WAN (bridged through IGD) and gets a routable IP address via IPCP instead of DHCP. All Ethernet packets from the CP on the LAN are bridged to the WAN by the IGD. Packets from other clients will not be bridged over this connection.
A CP may use the `RequestConnection` action to select a specific WAN connection instance, followed typically by a PPP connection request. All Ethernet packets (including IPCP requests) from this CP get redirected (bridged) through the default WAN connection. This assumes that that the IGD is capable of source (MAC) address based bridging. The CP that is actively using the connection may issue `RequestTermination` or `ForceTermination` actions through a secondary interface (if the CP is multi-homed) to end the use of this connection and change the `ConnectionStatus` to *Inactive*. Alternatively, a CP that is not using the connection may issue `RequestTermination` or `ForceTermination` to disconnect IGD from the WAN.

A *PPPoE_Bridged* session that is initiated on the WAN interface of an IGD is modeled differently. In this case, multiple IP sessions from CPs on the LAN may be routed/NAT'ed over a single *PPPoE_Bridged* connection. A ***WANPPPConnection*** with the *ConnectionType* set to **IP_Routed** will model this scenario.

2.5.3.4. PPTP_Relay, L2TP_Relay, PPPoE_Relay

In each of these scenarios, the LAN CP initiates a PPP connection to the WAN but essentially tunnels these packets to the IGD over an Ethernet/IP LAN link. The IGD de-tunnels and forwards the packets on the WAN (via PPPoA). However, the behavior of the LAN CP and usage of connection related actions is similar to that of an *IP_Bridged* connection.

If an IGD supports multiple WAN connection instances and has one active (PPP) bridged connection, it cannot allow other WAN connections to be simultaneously active unless it supports source (MAC) address based bridging on that bridged connection, where the source MAC address identifies a CP. The RequestConnection action returns an error if this were the case.

2.5.4. Non-UPnP compliant clients

The gateway SHOULD support non-UPnP compliant devices by making it is possible for a client to start accessing the Internet (effectively Dial-on-Demand) without sending `RequestConnection` command. The client in this scenario cannot specify which particular ***WANConnectionDevice*** or ***WANPPPConnection*** it wants to use. The ***WANPPPConnection*** to be used is identified using the `DefaultConnectionService` identified in ***Layer3Forwarding*** service. Also, the client will not be able to terminate the connection or use the other features of ***WANPPPConnection*** service (like detecting connection speed or port mapping).

2.5.5. VPN connections

VPN sessions may be established on a PPP connection initiated at the gateway. There are 2 cases to consider:

- A client on the residential LAN initiates a VPN session. In this case, the VPN is transparent to the ***WANPPPConnection*** instance and is not visible in the UPnP context.
- A VPN client is initiated on the gateway. In this case, the VPN session would use a ***WANPPPConnection*** instance. A VPN service to model this scenario is not standardized in this WC – it is possible however, as a vendor extension. One possible way to do this is to provide a VPN service in ***InternetGatewayDevice*** outside of ***WANDevice***. The state table for this service would support configuration attributes that are essential for setting up a VPN connection. These would include parameters such as

--`,,```,,,,````-`-`,,`,,`,`,,`---

Copyright International Organization for Standardization
Provided by IHS under license with ISO
No reproduction or networking permitted without license from IHS Not for Resale

- IP address(es) of VPN Gateway
- Security Protocols to be used
- Authentication and Privacy parameters specific to a security protocol
- Session time-out delay

In addition, it would also contain a `ConnectionService` variable that specifies a ***WANPPPConnection*** service instance in a ***WANConnectionDevice***. A comma-separated 2-tuple uniquely identifies the service:

uuid:*device-UUID*:*WANConnectionDevice*:*v* , urn:**upnp-org**:**serviceId**:*serviceID.*

The VPN service would support a `RequestConnection` action that would in turn invoke the `RequestConnection` of the corresponding ***WANPPPConnection*** service like any other UPnP client.

Copyright International Organization for Standardization
Provided by IHS under license with ISO
No reproduction or networking permitted without license from IHS Not for Resale

3. XML Service Description

```
<?xml version="1.0"?>
<scpd xmlns="urn:schemas-upnp-org:service-1-0">
  <specVersion>
    <major>1</major>
    <minor>0</minor>
  </specVersion>
  <actionList>
   <action>
    <name>SetConnectionType</name>
      <argumentList>
        <argument>
          <name>NewConnectionType</name>
          <direction>in</direction>
          <relatedStateVariable>ConnectionType</relatedStateVariable>
        </argument>
      </argumentList>
    </action>
    <action>
    <name>GetConnectionTypeInfo</name>
      <argumentList>
        <argument>
          <name>NewConnectionType</name>
          <direction>out</direction>
          <relatedStateVariable>ConnectionType</relatedStateVariable>
        </argument>
        <argument>
          <name>NewPossibleConnectionTypes</name>
          <direction>out</direction>
          <relatedStateVariable>PossibleConnectionTypes
                                    </relatedStateVariable>
        </argument>
      </argumentList>
    </action>
    <action>
    <name>ConfigureConnection</name>
      <argumentList>
        <argument>
          <name>NewUserName</name>
          <direction>in</direction>
          <relatedStateVariable>UserName</relatedStateVariable>
        </argument>
        <argument>
          <name>NewPassword</name>
          <direction>in</direction>
          <relatedStateVariable>Password</relatedStateVariable>
        </argument>
      </argumentList>
    </action>
    <action>
    <name>RequestConnection</name>
    </action>
    <action>
    <name>RequestTermination</name>
    </action>
    <action>
    <name>ForceTermination</name>
    </action>
    <action>
    <name>SetAutoDisconnectTime</name>
      <argumentList>
        <argument>
```

--`,,```,,,,````-`-`,,`,,`,`,,`---

Copyright International Organization for Standardization
Provided by IHS under license with ISO
No reproduction or networking permitted without license from IHS Not for Resale

```
            <name>NewAutoDisconnectTime</name>
            <direction>in</direction>
           <relatedStateVariable>AutoDisconnectTime</relatedStateVariable>
          </argument>
        </argumentList>
      </action>
      <action>
      <name>SetIdleDisconnectTime</name>
        <argumentList>
          <argument>
            <name>NewIdleDisconnectTime</name>
            <direction>in</direction>
           <relatedStateVariable>IdleDisconnectTime</relatedStateVariable>
          </argument>
        </argumentList>
      </action>
      <action>
      <name>SetWarnDisconnectDelay</name>
        <argumentList>
          <argument>
            <name>NewWarnDisconnectDelay</name>
            <direction>in</direction>
          <relatedStateVariable>WarnDisconnectDelay</relatedStateVariable>
          </argument>
        </argumentList>
      </action>
      <action>
      <name>GetStatusInfo</name>
        <argumentList>
          <argument>
            <name>NewConnectionStatus</name>
            <direction>out</direction>
            <relatedStateVariable>ConnectionStatus</relatedStateVariable>
          </argument>
          <argument>
            <name>NewLastConnectionError</name>
            <direction>out</direction>
          <relatedStateVariable>LastConnectionError</relatedStateVariable>
          </argument>
          <argument>
            <name>NewUptime</name>
            <direction>out</direction>
            <relatedStateVariable>Uptime</relatedStateVariable>
          </argument>
        </argumentList>
      </action>
      <action>
      <name>GetLinkLayerMaxBitRates</name>
        <argumentList>
          <argument>
            <name>NewUpstreamMaxBitRate</name>
            <direction>out</direction>
            <relatedStateVariable>UpstreamMaxBitRate</relatedStateVariable>
          </argument>
          <argument>
            <name>NewDownstreamMaxBitRate</name>
            <direction>out</direction>
<relatedStateVariable>DownstreamMaxBitRate</relatedStateVariable>
          </argument>
        </argumentList>
      </action>
      <action>
      <name>GetPPPEncryptionProtocol</name>
        <argumentList>
```

Copyright International Organization for Standardization
Provided by IHS under license with ISO
No reproduction or networking permitted without license from IHS Not for Resale

```
        <argument>
          <name>NewPPPEncryptionProtocol</name>
          <direction>out</direction>
<relatedStateVariable>PPPEncryptionProtocol</relatedStateVariable>
        </argument>
      </argumentList>
    </action>
    <action>
    <name>GetPPPCompressionProtocol</name>
      <argumentList>
        <argument>
          <name>NewPPPCompressionProtocol</name>
          <direction>out</direction>
<relatedStateVariable>PPPCompressionProtocol</relatedStateVariable>
        </argument>
      </argumentList>
    </action>
    <action>
    <name>GetPPPAuthenticationProtocol</name>
      <argumentList>
        <argument>
          <name>NewPPPAuthenticationProtocol</name>
          <direction>out</direction>
<relatedStateVariable>PPPAuthenticationProtocol</relatedStateVariable>
        </argument>
      </argumentList>
    </action>
    <action>
    <name>GetUserName</name>
      <argumentList>
        <argument>
          <name>NewUserName</name>
          <direction>out</direction>
          <relatedStateVariable>UserName</relatedStateVariable>
        </argument>
      </argumentList>
    </action>
    <action>
    <name>GetPassword</name>
      <argumentList>
        <argument>
          <name>NewPassword</name>
          <direction>out</direction>
          <relatedStateVariable>Password</relatedStateVariable>
        </argument>
      </argumentList>
    </action>
    <action>
    <name>GetAutoDisconnectTime</name>
      <argumentList>
        <argument>
          <name>NewAutoDisconnectTime</name>
          <direction>out</direction>
         <relatedStateVariable>AutoDisconnectTime</relatedStateVariable>
        </argument>
      </argumentList>
    </action>
    <action>
    <name>GetIdleDisconnectTime</name>
      <argumentList>
        <argument>
          <name>NewIdleDisconnectTime</name>
          <direction>out</direction>
         <relatedStateVariable>IdleDisconnectTime</relatedStateVariable>
```

Copyright International Organization for Standardization
Provided by IHS under license with ISO
No reproduction or networking permitted without license from IHS Not for Resale

```
        </argument>
      </argumentList>
    </action>
    <action>
    <name>GetWarnDisconnectDelay</name>
      <argumentList>
        <argument>
          <name>NewWarnDisconnectDelay</name>
          <direction>out</direction>
        <relatedStateVariable>WarnDisconnectDelay</relatedStateVariable>
        </argument>
      </argumentList>
    </action>
    <action>
    <name>GetNATRSIPStatus</name>
      <argumentList>
        <argument>
          <name>NewRSIPAvailable</name>
          <direction>out</direction>
          <relatedStateVariable>RSIPAvailable</relatedStateVariable>
        </argument>
        <argument>
          <name>NewNATEnabled</name>
          <direction>out</direction>
          <relatedStateVariable>NATEnabled</relatedStateVariable>
        </argument>
      </argumentList>
    </action>
    <action>
    <name>GetGenericPortMappingEntry</name>
      <argumentList>
        <argument>
          <name>NewPortMappingIndex</name>
          <direction>in</direction>
<relatedStateVariable>PortMappingNumberOfEntries</relatedStateVariable>
        </argument>
        <argument>
          <name>NewRemoteHost</name>
          <direction>out</direction>
          <relatedStateVariable>RemoteHost</relatedStateVariable>
        </argument>
        <argument>
          <name>NewExternalPort</name>
          <direction>out</direction>
          <relatedStateVariable>ExternalPort</relatedStateVariable>
        </argument>
        <argument>
          <name>NewProtocol</name>
          <direction>out</direction>
        <relatedStateVariable>PortMappingProtocol</relatedStateVariable>
        </argument>
        <argument>
          <name>NewInternalPort</name>
          <direction>out</direction>
          <relatedStateVariable>InternalPort</relatedStateVariable>
        </argument>
        <argument>
          <name>NewInternalClient</name>
          <direction>out</direction>
          <relatedStateVariable>InternalClient</relatedStateVariable>
        </argument>
        <argument>
          <name>NewEnabled</name>
          <direction>out</direction>
```

--`,,```,,,,````-`-`,,`,,`,`,,`---

Copyright International Organization for Standardization
Provided by IHS under license with ISO
No reproduction or networking permitted without license from IHS Not for Resale

```
          <relatedStateVariable>PortMappingEnabled</relatedStateVariable>
        </argument>
        <argument>
          <name>NewPortMappingDescription</name>
          <direction>out</direction>
     <relatedStateVariable>PortMappingDescription</relatedStateVariable>
        </argument>
        <argument>
          <name>NewLeaseDuration</name>
          <direction>out</direction>
<relatedStateVariable>PortMappingLeaseDuration</relatedStateVariable>
        </argument>
      </argumentList>
    </action>
    <action>
    <name>GetSpecificPortMappingEntry </name>
      <argumentList>
        <argument>
          <name>NewRemoteHost</name>
          <direction>in</direction>
          <relatedStateVariable>RemoteHost</relatedStateVariable>
        </argument>
        <argument>
          <name>NewExternalPort</name>
          <direction>in</direction>
          <relatedStateVariable>ExternalPort</relatedStateVariable>
        </argument>
        <argument>
          <name>NewProtocol</name>
          <direction>in</direction>
        <relatedStateVariable>PortMappingProtocol</relatedStateVariable>
        </argument>
        <argument>
          <name>NewInternalPort</name>
          <direction>out</direction>
          <relatedStateVariable>InternalPort</relatedStateVariable>
        </argument>
        <argument>
          <name>NewInternalClient</name>
          <direction>out</direction>
          <relatedStateVariable>InternalClient</relatedStateVariable>
        </argument>
        <argument>
          <name>NewEnabled</name>
          <direction>out</direction>
         <relatedStateVariable>PortMappingEnabled</relatedStateVariable>
        </argument>
        <argument>
          <name>NewPortMappingDescription</name>
          <direction>out</direction>
<relatedStateVariable>PortMappingDescription</relatedStateVariable>
        </argument>
        <argument>
          <name>NewLeaseDuration</name>
          <direction>out</direction>
<relatedStateVariable>PortMappingLeaseDuration</relatedStateVariable>
        </argument>
      </argumentList>
    </action>
    <action>
    <name>AddPortMapping </name>
      <argumentList>
        <argument>
          <name>NewRemoteHost</name>
```

Copyright International Organization for Standardization
Provided by IHS under license with ISO
No reproduction or networking permitted without license from IHS Not for Resale

```
          <direction>in</direction>
          <relatedStateVariable>RemoteHost</relatedStateVariable>
        </argument>
        <argument>
          <name>NewExternalPort</name>
          <direction>in</direction>
          <relatedStateVariable>ExternalPort</relatedStateVariable>
        </argument>
        <argument>
          <name>NewProtocol</name>
          <direction>in</direction>
        <relatedStateVariable>PortMappingProtocol</relatedStateVariable>
        </argument>
        <argument>
          <name>NewInternalPort</name>
          <direction>in</direction>
          <relatedStateVariable>InternalPort</relatedStateVariable>
        </argument>
        <argument>
          <name>NewInternalClient</name>
          <direction>in</direction>
          <relatedStateVariable>InternalClient</relatedStateVariable>
        </argument>
        <argument>
          <name>NewEnabled</name>
          <direction>in</direction>
          <relatedStateVariable>PortMappingEnabled</relatedStateVariable>
        </argument>
        <argument>
          <name>NewPortMappingDescription</name>
          <direction>in</direction>
     <relatedStateVariable>PortMappingDescription</relatedStateVariable>
        </argument>
        <argument>
          <name>NewLeaseDuration</name>
          <direction>in</direction>
<relatedStateVariable>PortMappingLeaseDuration</relatedStateVariable>
        </argument>
      </argumentList>
    </action>
    <action>
    <name>DeletePortMapping</name>
      <argumentList>
        <argument>
          <name>NewRemoteHost</name>
          <direction>in</direction>
          <relatedStateVariable>RemoteHost</relatedStateVariable>
        </argument>
        <argument>
          <name>NewExternalPort</name>
          <direction>in</direction>
          <relatedStateVariable>ExternalPort</relatedStateVariable>
        </argument>
        <argument>
          <name>NewProtocol</name>
          <direction>in</direction>
        <relatedStateVariable>PortMappingProtocol</relatedStateVariable>
        </argument>
      </argumentList>
    </action>
    <action>
    <name>GetExternalIPAddress</name>
      <argumentList>
        <argument>
```

Copyright International Organization for Standardization
Provided by IHS under license with ISO
No reproduction or networking permitted without license from IHS Not for Resale

```
            <name>NewExternalIPAddress</name>
            <direction>out</direction>
          <relatedStateVariable>ExternalIPAddress</relatedStateVariable>
          </argument>
        </argumentList>
      </action>
      <!-- Declarations for other actions added by UPnP vendor (if any) go
here -->
    </actionList>
    <serviceStateTable>
      <stateVariable sendEvents="no">
        <name>ConnectionType</name>
        <dataType>string</dataType>
 </stateVariable>
      <stateVariable sendEvents="yes">
        <name>PossibleConnectionTypes</name>
        <dataType>string</dataType>
        <allowedValueList>
          <allowedValue>Unconfigured</allowedValue>
          <allowedValue>IP_Routed</allowedValue>
          <allowedValue>DHCP_Spoofed</allowedValue>
          <allowedValue>PPPOE_Bridged</allowedValue>
          <allowedValue>PPTP_Relay</allowedValue>
          <allowedValue>L2TP_Relay</allowedValue>
          <allowedValue>PPOE_Relay</allowedValue>
        </allowedValueList>
      </stateVariable>
      <stateVariable sendEvents="yes">
        <name>ConnectionStatus</name>
        <dataType>string</dataType>
<allowedValueList>
          <allowedValue>Unconfigured</allowedValue>
          <allowedValue>Connecting</allowedValue>
          <allowedValue>Authenticating</allowedValue>
          <allowedValue>Connected</allowedValue>
          <allowedValue>PendingDisconnect</allowedValue>
          <allowedValue>Disconnecting</allowedValue>
          <allowedValue>Disconnected</allowedValue>
        </allowedValueList>
      </stateVariable>
      <stateVariable sendEvents="no">
        <name>Uptime</name>
        <dataType>ui4</dataType>
      </stateVariable>
      <stateVariable sendEvents="no">
        <name>UpstreamMaxBitRate</name>
        <dataType>ui4</dataType>
      </stateVariable>
      <stateVariable sendEvents="no">
        <name>DownstreamMaxBitRate</name>
        <dataType>ui4</dataType>
      </stateVariable>
      <stateVariable sendEvents="no">
        <name>LastConnectionError</name>
        <dataType>string</dataType>
        <allowedValueList>
          <allowedValue>ERROR_NONE</allowedValue>
          <allowedValue>ERROR_ISP_TIME_OUT</allowedValue>
          <allowedValue>ERROR_COMMAND_ABORTED</allowedValue>
          <allowedValue>ERROR_NOT_ENABLED_FOR_INTERNET</allowedValue>
          <allowedValue>ERROR_BAD_PHONE_NUMBER</allowedValue>
          <allowedValue>ERROR_USER_DISCONNECT</allowedValue>
          <allowedValue>ERROR_ISP_DISCONNECT</allowedValue>
          <allowedValue>ERROR_IDLE_DISCONNECT</allowedValue>
```

Copyright International Organization for Standardization
Provided by IHS under license with ISO
No reproduction or networking permitted without license from IHS Not for Resale

```
        <allowedValue>ERROR_FORCED_DISCONNECT</allowedValue>
        <allowedValue>ERROR_SERVER_OUT_OF_RESOURCES</allowedValue>
        <allowedValue>ERROR_RESTRICTED_LOGON_HOURS</allowedValue>
        <allowedValue>ERROR_ACCOUNT_DISABLED</allowedValue>
        <allowedValue>ERROR_ACCOUNT_EXPIRED</allowedValue>
        <allowedValue>ERROR_PASSWORD_EXPIRED</allowedValue>
        <allowedValue>ERROR_AUTHENTICATION_FAILURE</allowedValue>
        <allowedValue>ERROR_NO_DIALTONE</allowedValue>
        <allowedValue>ERROR_NO_CARRIER</allowedValue>
        <allowedValue>ERROR_NO_ANSWER</allowedValue>
        <allowedValue>ERROR_LINE_BUSY</allowedValue>
        <allowedValue>ERROR_UNSUPPORTED_BITSPERSECOND</allowedValue>
        <allowedValue>ERROR_TOO_MANY_LINE_ERRORS</allowedValue>
        <allowedValue>ERROR_IP_CONFIGURATION</allowedValue>
        <allowedValue>ERROR_UNKNOWN</allowedValue>
      </allowedValueList>
    </stateVariable>
     <stateVariable sendEvents="no">
      <name>AutoDisconnectTime</name>
      <dataType>ui4</dataType>
    </stateVariable>
    <stateVariable sendEvents="no">
      <name>IdleDisconnectTime</name>
      <dataType>ui4</dataType>
    </stateVariable>
    <stateVariable sendEvents="no">
      <name>WarnDisconnectDelay</name>
      <dataType>ui4</dataType>
    </stateVariable>
    <stateVariable sendEvents="no">
      <name>RSIPAvailable</name>
      <dataType>boolean</dataType>
    </stateVariable>
    <stateVariable sendEvents="no">
      <name>NATEnabled</name>
      <dataType>boolean</dataType>
    </stateVariable>
    <stateVariable sendEvents="no">
      <name>UserName</name>
      <dataType>string</dataType>
    </stateVariable>
    <stateVariable sendEvents="no">
      <name>Password</name>
      <dataType>string</dataType>
    </stateVariable>
    <stateVariable sendEvents="no">
      <name>PPPEncryptionProtocol</name>
      <dataType>string</dataType>
    </stateVariable>
    <stateVariable sendEvents="no">
      <name>PPPCompressionProtocol</name>
      <dataType>string</dataType>
    </stateVariable>
    <stateVariable sendEvents="no">
      <name>PPPAuthenticationProtocol</name>
      <dataType>string</dataType>
    </stateVariable>
    <stateVariable sendEvents="yes">
      <name>ExternalIPAddress</name>
      <dataType>string</dataType>
    </stateVariable>
    <stateVariable sendEvents="yes">
      <name>PortMappingNumberOfEntries</name>
      <dataType>ui2</dataType>
```

Copyright International Organization for Standardization
Provided by IHS under license with ISO
No reproduction or networking permitted without license from IHS Not for Resale

```
    </stateVariable>
    <stateVariable sendEvents="no">
      <name>PortMappingEnabled</name>
      <dataType>boolean</dataType>
    </stateVariable>
    <stateVariable sendEvents="no">
      <name>PortMappingLeaseDuration</name>
      <dataType>ui4</dataType>
    </stateVariable>
    <stateVariable sendEvents="no">
      <name>RemoteHost</name>
      <dataType>string</dataType>
    </stateVariable>
    <stateVariable sendEvents="no">
      <name>ExternalPort</name>
      <dataType>ui2</dataType>
    </stateVariable>
    <stateVariable sendEvents="no">
      <name>InternalPort</name>
      <dataType>ui2</dataType>
    </stateVariable>
    <stateVariable sendEvents="no">
      <name>PortMappingProtocol</name>
      <dataType>string</dataType>
      <allowedValueList>
        <allowedValue>TCP</allowedValue>
        <allowedValue>UDP</allowedValue>
      </allowedValueList>
    </stateVariable>
    <stateVariable sendEvents="no">
      <name>InternalClient</name>
      <dataType>string</dataType>
    </stateVariable>
    <stateVariable sendEvents="no">
      <name>PortMappingDescription</name>
      <dataType>string</dataType>
    </stateVariable>
    <!-- Declarations for other state variables added by UPnP vendor (if
any) go here -->
  </serviceStateTable>
</scpd>
```

Copyright International Organization for Standardization
Provided by IHS under license with ISO
No reproduction or networking permitted without license from IHS Not for Resale

4. Test

SetConnectionType / GetConnectionTypeInfo

Test Sequence 1: To test success path
Semantic class: 4
Pre-condition:

- Connection must be inactive. To verify, call `GetStatusInfo` and check OUT argument `ConnectionStatus`. Value should be Unconfigured or Disconnected.

GetConnectionTypeInfo **Success=200**

In-Arg	Values	State Variables	Current State	Expected State
		NA	NA	NA
Out-Arg	**Expected Value**			
ConnectionType	NA			
PossibleConnectionTypes	Initialized to a list of allowable connection types (see Table 1.1)			
		Error Code (if any)	NA	NA

SetConnectionType **Success=200**

In-Arg	Values	State Variables	Current State	Expected State
ConnectionType	Must be one of the values returned in PossibleConnectionTypes	NA	NA	NA
Out-Arg	**Expected Value**	ConnectionStatus*	**Unconfigured**	Disconnected
		Error Code (if any)	NA	NA

*** The state change on `ConnectionStatus` will not occur if the current state is already set to Disconnected.**

Copyright International Organization for Standardization
Provided by IHS under license with ISO
No reproduction or networking permitted without license from IHS Not for Resale

Test Sequence 2: To test Set followed by Get
Semantic class: 1
Pre-condition: None
Same as test sequence 1, followed by the following:

GetConnectionTypeInfo Success=200

In-Arg	**Values**	**State Variables**	**Current State**	**Expected State**
		NA	NA	NA
Out-Arg	**Expected Value**			
ConnectionType	Set in previous SetConnectionType action			
PossibleConnectionTypes	Initialized to a list of allowable connection types (see Table 1.1)			
		Error Code (if any)	NA	NA

--`,,```,,,,````-`-`,,`,,`,`,,`---

Copyright International Organization for Standardization
Provided by IHS under license with ISO
No reproduction or networking permitted without license from IHS Not for Resale

Test Sequence 3: To test error 703
Semantic class: 4
Pre-conditions:

- If `ConnectionStatus` is set to Unconfigured, dependent variables such as `ConnectionType`, `UserName` and/or `Password` may have to be initialized first
- If `EnabledForInternet` is implemented and set to 0, action `SetEnabledForInternet` in WANCommonInterfaceConfig MUST be invoked first to set the value to 1 prior to invoking `RequestConnection`.
- WAN connectivity must be provisioned to allow `RequestConnection` to complete successfully.
- For DSL-integrated IGD Only: If the device does NOT support `AutoConfig`, `LinkType` in `WANDSLLinkConfig` MUST be set to a valid value PRIOR to executing the above sequence of actions

GetStatusInfo **Success=200**

In-Arg	Values	State Variables	Current State	Expected State
		NA	NA	NA
Out-Arg	**Expected Value**			
ConnectionStatus	Should not be Unconfigured			
LastConnectionError	NA			
Uptime	NA			
		Error Code (if any)	NA	NA

RequestConnection **Success=200**

In-Arg	Values	State Variables	Current State	Expected State
		ConnectionStatus	Disconnected	Connected (evented)
Out-Arg	**Expected Value**			
		Error Code (if any)	NA	NA

SetConnectionType **Success=200**

In-Arg	Values	State Variables	Current State	Expected State
ConnectionType	Must be one of the values returned in PossibleConnectionTypes	NA	NA	NA
Out-Arg	**Expected Value**			
		Error Code (if any)	703	NA

Copyright International Organization for Standardization
Provided by IHS under license with ISO
No reproduction or networking permitted without license from IHS Not for Resale

ConfigureConnection / GetUserName / GetPassword

NOTE: These tests are only valid if the optional actions are supported by the IGD.

Test Sequence 4: To test success path
Semantic class: 4
Pre-conditions: None

GetStatusInfo **Success=200**

In-Arg	Values	State Variables	Current State	Expected State
		NA	NA	NA
Out-Arg	**Expected Value**			
ConnectionStatus	Unconfigured or Disconnected			
LastConnectionError	NA			
Uptime	NA			
		Error Code (if any)	NA	NA

ConfigureConnection **Success=200**

In-Arg	Values	State Variables	Current State	Expected State
UserName	Valid string	NA	NA	NA
Password	Valid string			
Out-Arg	**Expected Value**			
		Error Code (if any)	NA	NA

GetUserName **Success=200**

In-Arg	Values	State Variables	Current State	Expected State
		NA	NA	NA
Out-Arg	**Expected Value**			
UserName	Value set in ConfigureConnection			
		Error Code (if any)	NA	NA

Copyright International Organization for Standardization
Provided by IHS under license with ISO
No reproduction or networking permitted without license from IHS Not for Resale

GetPassword **Success=200**

In-Arg	Values	State Variables	Current State	Expected State
		NA	NA	NA
Out-Arg	**Expected Value**			
Password*	Value set in ConfigureConnection			
		Error Code (if any)	NA	NA

* Some implementations may not return the password value in cleartext. The test should not fail if this were the case.

NOTE: For DSL-integrated IGD Only: If `AutoConfig` is enabled, the above success path test should fail and return error 719.

Copyright International Organization for Standardization
Provided by IHS under license with ISO
No reproduction or networking permitted without license from IHS Not for Resale

Test Sequence 5: To test `ConnectionStatus` change
Semantic class: 4
Pre-conditions:

- A connection should be already configured and a connection should not be active - i.e. `ConnectionStatus` must be set to `Disconnected`

ConfigureConnection Success=200

In-Arg	Values	State Variables	Current State	Expected State
UserName	Empty string	ConnectionStatus	Disconnected	Unconfigured (evented)
Password	Empty string			
Out-Arg	**Expected Value**			
		Error Code (if any)	NA	NA

Test Sequence 6: To test error 703
Semantic class: 3
Pre-conditions:

- IGD settings (e.g. `LinkType`, `UserName` and `Password`) should be pre-configured and WAN connectivity provisioned as described earlier, to enable `RequestConnection` to succeed.

RequestConnection Success=200

In-Arg	Values	State Variables	Current State	Expected State
		ConnectionStatus	Disconnected	Connected (evented)
Out-Arg	**Expected Value**			
		Error Code (if any)	NA	NA

ConfigureConnection Success=200

In-Arg	Values	State Variables	Current State	Expected State
UserName	Empty string	NA	NA	NA
Password	Empty string			
Out-Arg	**Expected Value**			
		Error Code (if any)	703	NA

--`,,```,,,,````-`-`,,`,,`,`,,`---
Copyright International Organization for Standardization
Provided by IHS under license with ISO
No reproduction or networking permitted without license from IHS Not for Resale

RequestConnection

Test Sequence 7: To test success path
Semantic class: 3
Pre-conditions:

- IGD settings (e.g. `LinkType`, `UserName` and `Password`) should be pre-configured and WAN connectivity provisioned as described earlier, to enable `RequestConnection` to succeed.
- If `EnabledForInternet` is implemented in `WANCommonInterfaceConfig`, it should be set to 1 prior to executing this sequence of actions.

GetStatusInfo **Success=200**

In-Arg	**Values**	**State Variables**	**Current State**	**Expected State**
		NA	NA	NA
Out-Arg	**Expected Value**			
ConnectionStatus	Disconnected			
LastConnectionError	NA			
Uptime	NA			
		Error Code (if any)	NA	NA

RequestConnection **Success=200**

In-Arg	**Values**	**State Variables**	**Current State**	**Expected State**
		ConnectionStatus	Disconnected	Connected (evented)
Out-Arg	**Expected Value**			
		Error Code (if any)	NA	NA

GetStatusInfo **Success=200**

In-Arg	**Values**	**State Variables**	**Current State**	**Expected State**
		NA	NA	NA
Out-Arg	**Expected Value**			
ConnectionStatus	Connected			
LastConnectionError	ERROR_NONE			
Uptime	NA			
		Error Code (if any)	NA	NA

--`,,```,,,,````-`-`,,`,,`,`,,`---
Copyright International Organization for Standardization
Provided by IHS under license with ISO
No reproduction or networking permitted without license from IHS
Not for Resale

Test Sequence 8: To test error 704
Semantic class: 3
Pre-conditions:

- The IGD must be physically disconnected from the ISP/headend or the WAN link must be in use prior to running the following test sequence
- IGD settings (e.g. `LinkType`, `UserName` and `Password`) should be pre-configured to otherwise enable `RequestConnection` to succeed

RequestConnection **Success=200**

In-Arg	**Values**	**State Variables**	**Current State**	**Expected State**
		ConnectionStatus	Disconnected	No change
Out-Arg	**Expected Value**			
		Error Code (if any)	704	NA

GetStatusInfo **Success=200**

In-Arg	**Values**	**State Variables**	**Current State**	**Expected State**
		NA	NA	NA
Out-Arg	**Expected Value**			
ConnectionStatus	Connected			
LastConnectionError	Valid error code; see below			
Uptime	NA			
		Error Code (if any)	NA	NA

Some examples of possible error values for `LastConnectionError` are ERROR_NO_DIALTONE or ERROR_LINE_BUSY

--`,,```,,,,````-`-`,,`,,`,`,,`---

Copyright International Organization for Standardization
Provided by IHS under license with ISO
No reproduction or networking permitted without license from IHS Not for Resale

Test Sequence 9: To test error 706
Semantic class: 3
Pre-conditions:

- Follow sequence of actions outlined earlier to ensure that `ConnectionStatus` is Unconfigured.

RequestConnection **Success=200**

In-Arg	Values	State Variables	Current State	Expected State
		ConnectionStatus	Disconnected	No change
Out-Arg	**Expected Value**			
		Error Code (if any)	706	NA

Copyright International Organization for Standardization
Provided by IHS under license with ISO
No reproduction or networking permitted without license from IHS Not for Resale

Test Sequence 10: To test error 705
Semantic class: 3
Pre-conditions:

- Follow sequence of actions outlined earlier to ensure that `ConnectionStatus` is Disconnected.
- IGD settings (e.g. `LinkType`, `UserName` and `Password`) should be pre-configured and WAN connectivity provisioned as described earlier, to enable `RequestConnection` to succeed.

RequestConnection **Success=200**

In-Arg	**Values**	**State Variables**	**Current State**	**Expected State**
		ConnectionStatus	Disconnected	Connected (evented)
Out-Arg	**Expected Value**			
		Error Code (if any)	706	NA

RequestConnection **Success=200** Executed in sequence with no time delay

In-Arg	**Values**	**State Variables**	**Current State**	**Expected State**
		NA	NA	NA
Out-Arg	**Expected Value**			
		Error Code (if any)	705	NA

NOTE: It may not be possible to reproduce this test in certain deployments where connection setup is almost instantaneous.

Copyright International Organization for Standardization
Provided by IHS under license with ISO
No reproduction or networking permitted without license from IHS Not for Resale

Test Sequence 11: To test error 707
Semantic class: 3
Pre-conditions:
Follow sequence of actions outlined earlier to ensure that `ConnectionStatus` is Disconnected.
IGD settings (e.g. `LinkType`, `UserName` and `Password`) should be pre-configured and WAN connectivity provisioned as described earlier, to enable `RequestConnection` to succeed.

RequestConnection **Success=200**

In-Arg	Values	State Variables	Current State	Expected State
		ConnectionStatus	Disconnected	Connected (evented)
Out-Arg	**Expected Value**			
		Error Code (if any)	NA	NA

ForceTermination **Success=200**

In-Arg	Values	State Variables	Current State	Expected State
		ConnectionStatus	Connected	Disconnected (evented)
Out-Arg	**Expected Value**			
		Error Code (if any)	NA	NA

RequestConnection **Success=200** Executed in sequence with no time delay

In-Arg	Values	State Variables	Current State	Expected State
		NA	NA	NA
Out-Arg	**Expected Value**			
		Error Code (if any)	707	NA

NOTE: It may not be possible to reproduce this test in certain deployments where connection teardown is almost instantaneous.

Copyright International Organization for Standardization
Provided by IHS under license with ISO
No reproduction or networking permitted without license from IHS Not for Resale

Test Sequence 12: To test error 709
Semantic class: 3
Pre-conditions:

- Vendor must implement `SetEnabledForInternet` and related actions in the WANCommonInterfaceConfig service.

SetEnabledForInternet Success=200 in WANCommonInterfaceConfig

In-Arg	Values	State Variables	Current State	Expected State
EnabledForInternet	0	NA	NA	NA
Out-Arg	**Expected Value**			
		Error Code (if any)	NA	NA

RequestConnection Success=200

In-Arg	Values	State Variables	Current State	Expected State
		NA	NA	NA
Out-Arg	**Expected Value**			
		Error Code (if any)	709	NA

Copyright International Organization for Standardization
Provided by IHS under license with ISO
No reproduction or networking permitted without license from IHS Not for Resale

Test Sequence 13: To test error 708
Semantic class: 3
Pre-conditions:

- POTS IGD Only: `SetISPInfo` in POTSLinkConfig with empty `ISPPhoneNumber`. The action should succeed.
- DSL-integrated IGD Only: `SetDestinationAddress` in WANDSLLinkConfig to invalid value.

SetISPInfo **Success=200** POTS IGD Only in WANPOTSLinkConfig

In-Arg	Values	State Variables	Current State	Expected State
ISPPhoneNumber	Empty string	NA	NA	NA
ISPInfo	NA			
LinkType	NA			
Out-Arg	**Expected Value**			
		Error Code (if any)	NA	NA

SetDestinationAddress Success=200 DSL IGD Only in WANDSLLinkConfig

In-Arg	Values	State Variables	Current State	Expected State
DestinationAddress	Empty string	NA	NA	NA
Out-Arg	**Expected Value**			
		Error Code (if any)	NA	NA

RequestConnection **Success=200**

In-Arg	Values	State Variables	Current State	Expected State
		NA	NA	NA
Out-Arg	**Expected Value**			
		Error Code (if any)	708	NA

Copyright International Organization for Standardization
Provided by IHS under license with ISO
No reproduction or networking permitted without license from IHS Not for Resale

Test Sequence 14: To test error 710
Semantic class: 3
Pre-conditions: None

SetConnectionType **Success=200**

In-Arg	Values	State Variables	Current State	Expected State
ConnectionType	Must be one of the values returned in PossibleConnectionTypes but incompatible with RequestConnection. An example is PPPoE_Bridged	NA	NA	NA
Out-Arg	**Expected Value**	ConnectionStatus	Disconnected	No change
		Error Code (if any)	NA	NA

RequestConnection **Success=200**

In-Arg	Values	State Variables	Current State	Expected State
		NA	NA	NA
Out-Arg	**Expected Value**			
		Error Code (if any)	710	NA

Copyright International Organization for Standardization
Provided by IHS under license with ISO
No reproduction or networking permitted without license from IHS Not for Resale

RequestConnection / SetAutoDisconnectTime

Test Sequence 15: To test success path
Semantic class: 3
Pre-conditions:
Follow sequence of actions outlined earlier to ensure that `ConnectionStatus` is Disconnected.

SetAutoDisconnectTime **Success=200**

In-Arg	Values	State Variables	Current State	Expected State
AutoDisconnectTime	30	NA	NA	NA
Out-Arg	**Expected Value**			
		Error Code (if any)	NA	NA

RequestConnection **Success=200**

In-Arg	Values	State Variables	Current State	Expected State
		ConnectionStatus	Disconnected	Connected (evented)
Out-Arg	**Expected Value**			
		Error Code (if any)	NA	NA

After 30 seconds, `ConnectionStatus` will change to Disconnecting and eventually Disconnected and will be evented.

Copyright International Organization for Standardization
Provided by IHS under license with ISO
No reproduction or networking permitted without license from IHS Not for Resale

RequestConnection / SetIdleDisconnectTime

Test Sequence 16: To test success path
Semantic class: 3
Pre-conditions:

- Follow sequence of actions outlined earlier to ensure that `ConnectionStatus` is Disconnected.

SetIdleDisconnectTime **Success=200**

In-Arg	Values	State Variables	Current State	Expected State
IdleDisconnectTime	30	NA	NA	NA
Out-Arg	**Expected Value**			
		Error Code (if any)	NA	NA

RequestConnection **Success=200**

In-Arg	Values	State Variables	Current State	Expected State
		ConnectionStatus	Disconnected	Connected (evented)
Out-Arg	**Expected Value**			
		Error Code (if any)	NA	NA

After 30 seconds of no IP traffic on the connection, `ConnectionStatus` will change to Disconnecting and eventually Disconnected and will be evented.

NOTE: `IdleDisconnectTime` requires no traffic for specified period of time in seconds, which may be difficult to reproduce.

Copyright International Organization for Standardization
Provided by IHS under license with ISO
No reproduction or networking permitted without license from IHS Not for Resale

RequestConnection /SetWarnDisconnectDelay

Test Sequence 17: To test success path
Semantic class: 3
Pre-conditions:

- Follow sequence of actions outlined earlier to ensure that `ConnectionStatus` is Disconnected.

SetAutoDisconnectTime **Success=200**

In-Arg	Values	State Variables	Current State	Expected State
AutoDisconnectTime	30	NA	NA	NA
Out-Arg	**Expected Value**			
		Error Code (if any)	NA	NA

SetWarnDisconnectDelay **Success=200**

In-Arg	Values	State Variables	Current State	Expected State
WarnDisconnectDelay	30	NA	NA	NA
Out-Arg	**Expected Value**			
		Error Code (if any)	NA	NA

RequestConnection **Success=200**

In-Arg	Values	State Variables	Current State	Expected State
		ConnectionStatus	Disconnected	Connected (evented)
Out-Arg	**Expected Value**			
		Error Code (if any)	NA	NA

After 30 seconds, `ConnectionStatus` will change to PendingDisconnect and eventually will be evented.
After 15 seconds, `ConnectionStatus` will change to Disconnected and will be evented.

Copyright International Organization for Standardization
Provided by IHS under license with ISO
No reproduction or networking permitted without license from IHS Not for Resale

RequestTermination

Test Sequence 18: To test success path
Semantic class: 3
Pre-conditions:

- Follow sequence of actions outlined earlier to ensure that `ConnectionStatus` is Disconnected.

RequestConnection **Success=200**

In-Arg	Values	State Variables	Current State	Expected State
		ConnectionStatus	Disconnected	Connected (evented)
Out-Arg	**Expected Value**			
		Error Code (if any)	NA	NA

RequestTermination **Success=200**

In-Arg	Values	State Variables	Current State	Expected State
		ConnectionStatus	Connected	Disconnected (evented)
Out-Arg	**Expected Value**			
		Error Code (if any)	NA	NA

NOTE: This test sequence presumes that the connection is configured a priori. If not, follow steps to configure the connection

Copyright International Organization for Standardization
Provided by IHS under license with ISO
No reproduction or networking permitted without license from IHS Not for Resale

Test Sequence 19: To test error 711
Semantic class: 3
Pre-conditions:

- Follow sequence of actions outlined earlier to ensure that `ConnectionStatus` is Disconnected.

RequestConnection **Success=200**

In-Arg	Values	State Variables	Current State	Expected State
		ConnectionStatus	Disconnected	Connected (evented)
Out-Arg	**Expected Value**			
		Error Code (if any)	NA	NA

RequestTermination **Success=200**

In-Arg	Values	State Variables	Current State	Expected State
		ConnectionStatus	Connected	Disconnected (evented)
Out-Arg	**Expected Value**			
		Error Code (if any)	NA	NA

RequestTermination **Success=200**

In-Arg	Values	State Variables	Current State	Expected State
		NA	NA	NA
Out-Arg	**Expected Value**			
		Error Code (if any)	711	NA

--`,,```,,,,````-`-`,,`,,`,`,,`---

Copyright International Organization for Standardization
Provided by IHS under license with ISO
No reproduction or networking permitted without license from IHS Not for Resale

Test Sequence 20: To test error 707
Semantic class: 3
Pre-conditions:

- Follow sequence of actions outlined earlier to ensure that `ConnectionStatus` is Disconnected.

RequestConnection **Success=200**

In-Arg	Values	State Variables	Current State	Expected State
		ConnectionStatus	Disconnected	Connected (evented)
Out-Arg	**Expected Value**			
		Error Code (if any)	NA	NA

RequestTermination **Success=200**

In-Arg	Values	State Variables	Current State	Expected State
		ConnectionStatus	Connected	Disconnected (evented)
Out-Arg	**Expected Value**			
		Error Code (if any)	NA	NA

RequestTermination **Success=200** Executed in sequence with no time delay

In-Arg	Values	State Variables	Current State	Expected State
		NA	NA	NA
Out-Arg	**Expected Value**			
		Error Code (if any)	707	NA

NOTE: This test may not be possible in certain deployments where connection teardown is almost instantaneous.

Copyright International Organization for Standardization
Provided by IHS under license with ISO
No reproduction or networking permitted without license from IHS Not for Resale

Test Sequence 21: To test error 710
Semantic class: 3
Pre-conditions:
Follow sequence of actions outlined earlier to ensure that `ConnectionStatus` is Disconnected.

SetConnectionType **Success=200**

In-Arg	Values	State Variables	Current State	Expected State
ConnectionType	Must be one of the values returned in PossibleConnectionTypes but incompatible with RequestConnection. An example is PPPoE_Bridged	NA	NA	NA
Out-Arg	**Expected Value**	ConnectionStatus	Disconnected	No change
		Error Code (if any)	NA	NA

Follow steps to activate the connection (i.e. `ConnectionStatus` is Connected).

RequestTermination **Success=200**

In-Arg	Values	State Variables	Current State	Expected State
		NA	NA	NA
Out-Arg	**Expected Value**			
		Error Code (if any)	710	NA

Copyright International Organization for Standardization
Provided by IHS under license with ISO
No reproduction or networking permitted without license from IHS Not for Resale

RequestTermination / SetWarnDisconnectDelay

Test Sequence 22: To test success path
Semantic class: 3
Pre-conditions:

- Follow sequence of actions outlined earlier to ensure that `ConnectionStatus` is Disconnected.

SetWarnDisconnectDelay **Success=200**

In-Arg	Values	State Variables	Current State	Expected State
WarnDisconnectDelay	30	NA	NA	NA
Out-Arg	**Expected Value**			
		Error Code (if any)	NA	NA

RequestConnection **Success=200**

In-Arg	Values	State Variables	Current State	Expected State
		ConnectionStatus	Disconnected	Connected (evented)
Out-Arg	**Expected Value**			
		Error Code (if any)	NA	NA

RequestTermination **Success=200**

In-Arg	Values	State Variables	Current State	Expected State
		ConnectionStatus	Connected	Pending Disconnect (evented)
Out-Arg	**Expected Value**			
		Error Code (if any)	NA	NA

After 30 seconds, `ConnectionStatus` will change to Disconnected and will be evented.

--`,,```,,,,````-`-`,,`,,`,`,,`---

Copyright International Organization for Standardization
Provided by IHS under license with ISO
No reproduction or networking permitted without license from IHS Not for Resale

ForceTermination

Test Sequence 23: To test success path
Semantic class: 3
Pre-conditions:

- Follow sequence of actions outlined earlier to ensure that `ConnectionStatus` is Disconnected.

RequestConnection **Success=200**

In-Arg	Values	State Variables	Current State	Expected State
		ConnectionStatus	Disconnected	Connected (evented)
Out-Arg	**Expected Value**			
		Error Code (if any)	NA	NA

ForceTermination **Success=200**

In-Arg	Values	State Variables	Current State	Expected State
		ConnectionStatus	Connected	Disconnected (evented)
Out-Arg	**Expected Value**			
		Error Code (if any)	NA	NA

NOTE: This test sequence presumes that the connection is configured a priori. If not, follow steps to configure the connection

Copyright International Organization for Standardization
Provided by IHS under license with ISO
No reproduction or networking permitted without license from IHS Not for Resale

Test Sequence 24: To test error 711
Semantic class: 3
Pre-conditions:

- Follow sequence of actions outlined earlier to ensure that `ConnectionStatus` is Disconnected.

RequestConnection **Success=200**

In-Arg	Values	State Variables	Current State	Expected State
		ConnectionStatus	Disconnected	Connected (evented)
Out-Arg	**Expected Value**			
		Error Code (if any)	NA	NA

ForceTermination **Success=200**

In-Arg	Values	State Variables	Current State	Expected State
		ConnectionStatus	Connected	Disconnected (evented)
Out-Arg	**Expected Value**			
		Error Code (if any)	NA	NA

ForceTermination **Success=200**

In-Arg	Values	State Variables	Current State	Expected State
		NA	NA	NA
Out-Arg	**Expected Value**			
		Error Code (if any)	711	NA

--`,,```,,,,````-`-`,,`,,`,`,,`---
Copyright International Organization for Standardization
Provided by IHS under license with ISO
No reproduction or networking permitted without license from IHS Not for Resale

Test Sequence 25: To test error 707
Semantic class: 3
Pre-conditions:

- Follow sequence of actions outlined earlier to ensure that `ConnectionStatus` is Disconnected.

RequestConnection **Success=200**

In-Arg	Values	State Variables	Current State	Expected State
		ConnectionStatus	Disconnected	Connected (evented)
Out-Arg	**Expected Value**			
		Error Code (if any)	NA	NA

ForceTermination **Success=200**

In-Arg	Values	State Variables	Current State	Expected State
		ConnectionStatus	Connected	Disconnected (evented)
Out-Arg	**Expected Value**			
		Error Code (if any)	NA	NA

ForceTermination **Success=200** Executed in sequence with no time delay

In-Arg	Values	State Variables	Current State	Expected State
		NA	NA	NA
Out-Arg	**Expected Value**			
		Error Code (if any)	707	NA

NOTE: This test may not be possible in certain deployments where connection teardown is almost instantaneous.

--`,,```,,,,````-`-`,,`,,`,`,,`---

Copyright International Organization for Standardization
Provided by IHS under license with ISO
No reproduction or networking permitted without license from IHS Not for Resale

Test Sequence 26: To test error 710
Semantic class: 3
Pre-conditions:

- Follow sequence of actions outlined earlier to ensure that `ConnectionStatus` is Disconnected.

SetConnectionType **Success=200**

In-Arg	Values	State Variables	Current State	Expected State
ConnectionType	Must be one of the values returned in PossibleConnectionTypes but incompatible with RequestConnection. An example is PPPoE_Bridged	NA	NA	NA
Out-Arg	**Expected Value**	ConnectionStatus	Disconnected	No change
		Error Code (if any)	NA	NA

Follow steps to activate the connection (i.e. `ConnectionStatus` is Connected).

ForceTermination **Success=200**

In-Arg	Values	State Variables	Current State	Expected State
		NA	NA	NA
Out-Arg	**Expected Value**			
		Error Code (if any)	710	NA

Copyright International Organization for Standardization
Provided by IHS under license with ISO
No reproduction or networking permitted without license from IHS Not for Resale

ForceTermination / SetWarnDisconnectDelay

Test Sequence 27: To test the fact that WarnDisconnectDelay has no effect on ForceTermination
Semantic class: 3
Pre-conditions:
Follow sequence of actions outlined earlier to ensure that `ConnectionStatus` is Disconnected.

SetWarnDisconnectDelay **Success=200**

In-Arg	Values	State Variables	Current State	Expected State
WarnDisconnectDelay	30	NA	NA	NA
Out-Arg	**Expected Value**			
		Error Code (if any)	NA	NA

RequestConnection **Success=200**

In-Arg	Values	State Variables	Current State	Expected State
		ConnectionStatus	Disconnected	Connected (evented)
Out-Arg	**Expected Value**			
		Error Code (if any)	NA	NA

ForceTermination **Success=200**

In-Arg	Values	State Variables	Current State	Expected State
		ConnectionStatus	Connected	Disconnected (evented)
Out-Arg	**Expected Value**			
		Error Code (if any)	NA	NA

Copyright International Organization for Standardization
Provided by IHS under license with ISO
No reproduction or networking permitted without license from IHS Not for Resale

AddPortMapping / DeletePortMapping

Test Sequence 28: To test success path
Semantic class: 2
Pre-conditions:

- Port mapping entry being added should not already exist in the port mapping table. Values provided below serve only as an example.

GetPortMappingNumberOfEntries **Success=200**

In-Arg	**Values**	**State Variables**	**Current State**	**Expected State**
		NA	NA	NA
Out-Arg	**Expected Value**			
PortMappingNumberOfEntries	0 or a positive integer	**Error Code (if any)**	NA	NA

AddPortMapping **Success=200**

In-Arg	**Values**	**State Variables**	**Current State**	**Expected State**
RemoteHost	A valid IP address	PortMappingNumberOfEntries	0 or a positive integrer	Increment by 1 (evented)
ExternalPort	80			
PortMappingProtocol	TCP			
InternalPort	80			
InternalClient	A valid IP address			
PortMappingEnabled	1			
PortMappingDescription	Test Description			
PortMappingLeaseDuration	0			
Out-Arg	**Expected Value**			
		Error Code (if any)	NA	NA

Copyright International Organization for Standardization
Provided by IHS under license with ISO
No reproduction or networking permitted without license from IHS Not for Resale

GetPortMappingNumberOfEntries **Success=200**

In-Arg	**Values**	**State Variables**	**Current State**	**Expected State**
		NA	NA	NA
Out-Arg	**Expected Value**			
PortMappingNumberOfEntries	1 more than the value retrieved prior to the AddPortMapping action	**Error Code (if any)**	NA	NA

--`,,```,,,,````-`-`,,`,,`,`,,`---

Copyright International Organization for Standardization
Provided by IHS under license with ISO
No reproduction or networking permitted without license from IHS Not for Resale

Test Sequence 29: To test error 718
Semantic class: 2
Pre-conditions:

- Port mapping entry being added should not already exist in the port mapping table. Values provided below serve only as an example.

AddPortMapping **Success=200**

In-Arg	**Values**	**State Variables**	**Current State**	**Expected State**
RemoteHost	A valid IP address	PortMappingNumberOfEntries	0 or a positive integer	Increment by 1 (evented)
ExternalPort	80			
PortMappingProtocol	TCP			
InternalPort	80			
InternalClient	A valid IP address			
PortMappingEnabled	1			
PortMappingDescription	Test Description			
PortMappingLeaseDuration	0			
Out-Arg	**Expected Value**			
		Error Code (if any)	NA	NA

Copyright International Organization for Standardization
Provided by IHS under license with ISO
No reproduction or networking permitted without license from IHS Not for Resale

AddPortMapping **Success=200**

In-Arg	Values	State Variables	Current State	Expected State
RemoteHost	A valid IP address	PortMappingNumberOfEntries	0 or a positive integer	No change
ExternalPort	80			
PortMappingProtocol	TCP			
InternalPort	81			
InternalClient	A valid IP address			
PortMappingEnabled	1			
PortMappingDescription	Test Description			
PortMappingLeaseDuration	0			
Out-Arg	**Expected Value**			
		Error Code (if any)	718	NA

Copyright International Organization for Standardization
Provided by IHS under license with ISO
No reproduction or networking permitted without license from IHS Not for Resale

Test Sequence 30: To test success path with DeletePortMapping
Semantic class: 2
Pre-conditions:
Port mapping entry being added should not already exist in the port mapping table. Values provided below serve only as an example.

AddPortMapping **Success=200**

In-Arg	**Values**	**State Variables**	**Current State**	**Expected State**
RemoteHost	A valid IP address	PortMappingNumberOfEntries	0 or a positive integer	Increment by 1 (evented)
ExternalPort	80			
PortMappingProtocol	TCP			
InternalPort	80			
InternalClient	A valid IP address			
PortMappingEnabled	1			
PortMappingDescription	Test Description			
PortMappingLeaseDuration	0			
Out-Arg	**Expected Value**			
		Error Code (if any)	NA	NA

DeletePortMapping **Success=200**

In-Arg	**Values**	**State Variables**	**Current State**	**Expected State**
RemoteHost	A valid IP address	PortMappingNumberOfEntries	A positive integer	Decrement by 1 (evented)
ExternalPort	80			
PortMappingProtocol	TCP			
Out-Arg	**Expected Value**			
		Error Code (if any)	NA	NA

Copyright International Organization for Standardization
Provided by IHS under license with ISO
No reproduction or networking permitted without license from IHS Not for Resale

Test Sequence 31: To test error 714
Semantic class: 2
Pre-conditions:

- Port mapping entry being added should not already exist in the port mapping table. Values provided below serve only as an example.

AddPortMapping **Success=200**

In-Arg	Values	State Variables	Current State	Expected State
RemoteHost	A valid IP address	PortMappingNumberOfEntries	0 or a positive integer	Increment by 1 (evented)
ExternalPort	80			
PortMappingProtocol	TCP			
InternalPort	80			
InternalClient	A valid IP address			
PortMappingEnabled	1			
PortMappingDescription	Test Description			
PortMappingLeaseDuration	0			
Out-Arg	**Expected Value**			
		Error Code (if any)	NA	NA

DeletePortMapping **Success=200**

In-Arg	Values	State Variables	Current State	Expected State
RemoteHost	A valid IP address	PortMappingNumberOfEntries	A positive integer	Decrement by 1 (evented)
ExternalPort	80			
PortMappingProtocol	TCP			
Out-Arg	**Expected Value**			
		Error Code (if any)	NA	NA

--`,,```,,,,````-`-`,,`,,`,`,,`---
Copyright International Organization for Standardization
Provided by IHS under license with ISO
No reproduction or networking permitted without license from IHS Not for Resale

DeletePortMapping **Success=200**

In-Arg	**Values**	**State Variables**	**Current State**	**Expected State**
RemoteHost	A valid IP address	PortMappingNumberOfEntries	0 or a positive integer	No change
ExternalPort	80			
PortMappingProtocol	TCP			
Out-Arg	**Expected Value**			
		Error Code (if any)	714	NA

--`,,```,,,,````-`-`,,`,,`,`,,`---

Copyright International Organization for Standardization
Provided by IHS under license with ISO
No reproduction or networking permitted without license from IHS Not for Resale

Test Sequence 32: To test error 724
Semantic class: 2
Pre-conditions:

- Port mapping entry being added should not already exist in the port mapping table. Values provided below serve only as an example.

NOTE: This test is ONLY for implementations that do not support different values for `ExternalPort` and `InternalPort`.

AddPortMapping **Success=200**

In-Arg	**Values**	**State Variables**	**Current State**	**Expected State**
RemoteHost	A valid IP address	PortMappingNumberOfEntries	0 or a positive integer	No change
ExternalPort	85			
PortMappingProtocol	TCP			
InternalPort	80			
InternalClient	A valid IP address			
PortMappingEnabled	1			
PortMappingDescription	Test Description			
PortMappingLeaseDuration	0			
Out-Arg	**Expected Value**			
		Error Code (if any)	724	NA

Copyright International Organization for Standardization
Provided by IHS under license with ISO
No reproduction or networking permitted without license from IHS Not for Resale

Test Sequence 33: To test error 725
Semantic class: 2
Pre-conditions:

- Port mapping entry being added should not already exist in the port mapping table. Values provided below serve only as an example.

NOTE: This test is ONLY for implementations that do not support dynamic port mappings (i.e. those with finite lease durations).

AddPortMapping **Success=200**

In-Arg	**Values**	**State Variables**	**Current State**	**Expected State**
RemoteHost	A valid IP address	PortMappingNumberOfEntries	0 or a positive integer	No change
ExternalPort	85			
PortMappingProtocol	TCP			
InternalPort	80			
InternalClient	A valid IP address			
PortMappingEnabled	1			
PortMappingDescription	Test Description			
PortMappingLeaseDuration	2000			
Out-Arg	**Expected Value**			
		Error Code (if any)	725	NA

Copyright International Organization for Standardization
Provided by IHS under license with ISO
No reproduction or networking permitted without license from IHS Not for Resale

AddPortMapping / GetGenericPortMapping / GetSpecificPortMapping

Test Sequence 34: To test success path
Semantic class: 2
Pre-conditions:

- Port mapping entry being added should not already exist in the port mapping table. Values provided below serve only as an example.

AddPortMapping **Success=200**

In-Arg	**Values**	**State Variables**	**Current State**	**Expected State**
RemoteHost	A valid IP address	PortMappingNumberOfEntries	0 or a positive integer	Increment by 1 (evented)
ExternalPort	80			
PortMappingProtocol	TCP			
InternalPort	80			
InternalClient	A valid IP address			
PortMappingEnabled	1			
PortMappingDescription	Test Description			
PortMappingLeaseDuration	0			
Out-Arg	**Expected Value**			
		Error Code (if any)	NA	NA

Copyright International Organization for Standardization
Provided by IHS under license with ISO
No reproduction or networking permitted without license from IHS Not for Resale

AddPortMapping **Success=200**

In-Arg	Values	State Variables	Current State	Expected State
RemoteHost	A valid IP address	PortMappingNumberOfEntries	0 or a positive integer	Increment by 1 (evented)
ExternalPort	81			
PortMappingProtocol	TCP			
InternalPort	81			
InternalClient	A valid IP address			
PortMappingEnabled	1			
PortMappingDescription	Test Description			
PortMappingLeaseDuration	0			
Out-Arg	**Expected Value**			
		Error Code (if any)	NA	NA

AddPortMapping **Success=200**

In-Arg	Values	State Variables	Current State	Expected State
RemoteHost	A valid IP address	PortMappingNumberOfEntries	0 or a positive integer	Increment by 1 (evented)
ExternalPort	81			
PortMappingProtocol	TCP			
InternalPort	81			
InternalClient	A valid IP address			
PortMappingEnabled	1			
PortMappingDescription	Test Description			
PortMappingLeaseDuration	0			
Out-Arg	**Expected Value**			
		Error Code (if any)	NA	NA

Copyright International Organization for Standardization
Provided by IHS under license with ISO
No reproduction or networking permitted without license from IHS Not for Resale

GetGenericPortMappingEntry Success = 200

In-Arg	Values	State Variables	Current State	Expected State
NewPortMappingIndex	0 to 2			
Out-Arg	**Expected Value**			
RemoteHost	Values should correspond to those previously added			
ExternalPort	Values should correspond to those previously added			
PortMappingProtocol	Values should correspond to those previously added			
InternalPort	Values should correspond to those previously added			
InternalClient	Values should correspond to those previously added			
PortMappingEnabled	Values should correspond to those previously added			
PortMappingDescription	Values should correspond to those previously added			
PortMappingLeaseDuration	Values should correspond to those previously added			
		Error Code (if any)	NA	NA

--`,,```,,,,````-`-`,,`,,`,`,,`---

Copyright International Organization for Standardization
Provided by IHS under license with ISO
No reproduction or networking permitted without license from IHS Not for Resale

GetSpecificPortMappingEntry Success = 200

In-Arg	Values	State Variables	Current State	Expected State
RemoteHost	Values should correspond to those previously added			
ExternalPort	Values should correspond to those previously added			
PortMappingProtocol	Values should correspond to those previously added			
Out-Arg	**Expected Value**			
InternalPort	Values should correspond to those previously added			
InternalClient	Values should correspond to those previously added			
PortMappingEnabled	Values should correspond to those previously added			
PortMappingDescription	Values should correspond to those previously added			
PortMappingLeaseDuration	Values should correspond to those previously added			
		Error Code (if any)	NA	NA

--`,,```,,,,````-`-`,,`,,`,`,,`---

Copyright International Organization for Standardization
Provided by IHS under license with ISO
No reproduction or networking permitted without license from IHS Not for Resale

Test Sequence 35: To test error 713
Semantic class: 2
Pre-conditions:

- Port mapping entry being added should not already exist in the port mapping table. Values provided below serve only as an example.

AddPortMapping **Success=200**

In-Arg	**Values**	**State Variables**	**Current State**	**Expected State**
RemoteHost	A valid IP address	PortMappingNumberOfEntries	0 or a positive integer	Increment by 1 (evented)
ExternalPort	80			
PortMappingProtocol	TCP			
InternalPort	80			
InternalClient	A valid IP address			
PortMappingEnabled	1			
PortMappingDescription	Test Description			
PortMappingLeaseDuration	0			
Out-Arg	**Expected Value**			
		Error Code (if any)	NA	NA

Copyright International Organization for Standardization
Provided by IHS under license with ISO
No reproduction or networking permitted without license from IHS Not for Resale

AddPortMapping **Success=200**

In-Arg	Values	State Variables	Current State	Expected State
RemoteHost	A valid IP address	PortMappingNumberOfEntries	0 or a positive integer	Increment by 1 (evented)
ExternalPort	81			
PortMappingProtocol	TCP			
InternalPort	81			
InternalClient	A valid IP address			
PortMappingEnabled	1			
PortMappingDescription	Test Description			
PortMappingLeaseDuration	0			
Out-Arg	**Expected Value**			
		Error Code (if any)	NA	NA

GetGenericPortMappingEntry Success = 200

In-Arg	Values	State Variables	Current State	Expected State
NewPortMappingIndex	2			
Out-Arg	**Expected Value**			
RemoteHost	NA			
ExternalPort	NA			
PortMappingProtocol	NA			
InternalPort	NA			
InternalClient	NA			
PortMappingEnabled	NA			
PortMappingDescription	NA			
PortMappingLeaseDuration	NA			
		Error Code (if any)	713	NA

--`,,```,,,,````-`-`,,`,,`,`,,`---
Copyright International Organization for Standardization
Provided by IHS under license with ISO
No reproduction or networking permitted without license from IHS Not for Resale

Test Sequence 36: To test error 714
Semantic class: 2
Pre-conditions:

- Port mapping entry being added should not already exist in the port mapping table. Values provided below serve only as an example.

AddPortMapping **Success=200**

In-Arg	**Values**	**State Variables**	**Current State**	**Expected State**
RemoteHost	A valid IP address	PortMappingNumberOfEntries	0 or a positive integer	Increment by 1 (evented)
ExternalPort	80			
PortMappingProtocol	TCP			
InternalPort	80			
InternalClient	A valid IP address			
PortMappingEnabled	1			
PortMappingDescription	Test Description			
PortMappingLeaseDuration	0			
Out-Arg	**Expected Value**			
		Error Code (if any)	NA	NA

--`,,```,,,,````-`-`,,`,,`,`,,`---

Copyright International Organization for Standardization
Provided by IHS under license with ISO
No reproduction or networking permitted without license from IHS Not for Resale

AddPortMapping **Success=200**

In-Arg	**Values**	**State Variables**	**Current State**	**Expected State**
RemoteHost	A valid IP address	PortMappingNumberOfEntries	0 or a positive integer	Increment by 1 (evented)
ExternalPort	81			
PortMappingProtocol	TCP			
InternalPort	81			
InternalClient	A valid IP address			
PortMappingEnabled	1			
PortMappingDescription	Test Description			
PortMappingLeaseDuration	0			
Out-Arg	**Expected Value**			
		Error Code (if any)	NA	NA

Copyright International Organization for Standardization
Provided by IHS under license with ISO
No reproduction or networking permitted without license from IHS Not for Resale

GetSpecificPortMappingEntry Success = 200

In-Arg	Values	State Variables	Current State	Expected State
RemoteHost	Values should correspond to those previously added			
ExternalPort	Values should correspond to those previously added			
PortMappingProtocol	5000			
Out-Arg	**Expected Value**			
InternalPort	Values should correspond to those previously added			
InternalClient	Values should correspond to those previously added			
PortMappingEnabled	Values should correspond to those previously added			
PortMappingDescription	Values should correspond to those previously added			
PortMappingLeaseDuration	Values should correspond to those previously added			
		Error Code (if any)	714	NA

Copyright International Organization for Standardization
Provided by IHS under license with ISO
No reproduction or networking permitted without license from IHS Not for Resale

Copyright International Organization for Standardization
Provided by IHS under license with ISO
No reproduction or networking permitted without license from IHS
Not for Resale

Copyright International Organization for Standardization
Provided by IHS under license with ISO
No reproduction or networking permitted without license from IHS
Not for Resale

INTERNATIONAL
ELECTROTECHNICAL
COMMISSION

3, rue de Varembé
PO Box 131
CH-1211 Geneva 20
Switzerland

Tel: + 41 22 919 02 11
Fax: + 41 22 919 03 00
info@iec.ch
www.iec.ch

Copyright International Organization for Standardization
Provided by IHS under license with ISO
No reproduction or networking permitted without license from IHS
Not for Resale