INTERNATIONAL STANDARD

ISO/IEC 25435

First edition
2006-06-01

Data Interchange on 60 mm Read-Only ODC — Capacity: 1,8 Gbytes (UMD™)

Échange de données sur disque optique de 60 mm en lecture seule — Capacité: 1,8 Go (UMD™)

Reference number
ISO/IEC 25435:2006(E)

© ISO/IEC 2006

Copyright International Organization for Standardization
Provided by IHS under license with ISO
No reproduction or networking permitted without license from IHS

Not for Resale

PDF disclaimer

This PDF file may contain embedded typefaces. In accordance with Adobe's licensing policy, this file may be printed or viewed but shall not be edited unless the typefaces which are embedded are licensed to and installed on the computer performing the editing. In downloading this file, parties accept therein the responsibility of not infringing Adobe's licensing policy. The ISO Central Secretariat accepts no liability in this area.

Adobe is a trademark of Adobe Systems Incorporated.

Details of the software products used to create this PDF file can be found in the General Info relative to the file; the PDF-creation parameters were optimized for printing. Every care has been taken to ensure that the file is suitable for use by ISO member bodies. In the unlikely event that a problem relating to it is found, please inform the Central Secretariat at the address given below.

© ISO/IEC 2006

All rights reserved. Unless otherwise specified, no part of this publication may be reproduced or utilized in any form or by any means, electronic or mechanical, including photocopying and microfilm, without permission in writing from either ISO at the address below or ISO's member body in the country of the requester.

ISO copyright office
Case postale 56 • CH-1211 Geneva 20
Tel. + 41 22 749 01 11
Fax + 41 22 749 09 47
E-mail copyright@iso.org
Web www.iso.org

Published in Switzerland

--`,,```,,,,````-`-`,,`,,`,`,,`---

Copyright International Organization for Standardization
Provided by IHS under license with ISO
No reproduction or networking permitted without license from IHS

© ISO/IEC 2006 – All rights reserved

Not for Resale

Contents

Page

Foreword ... vi

Introduction ... vii

Section 1 — General ... 1

1 Scope ... 1

2 Conformance ... 1
2.1 Optical disk cartridge ... 1
2.2 Generating system ... 1
2.3 Receiving system ... 1

3 Normative references ... 1

4 Terms and definitions ... 2

5 Conventions and notations ... 3
5.1 Representation of numbers ... 3
5.2 Names ... 4

6 List of acronyms ... 4

7 General description of the ODC ... 5

8 Environments and Safety ... 6
8.1 Environments ... 6
8.1.1 Test environment ... 6
8.1.2 Operating environment ... 7
8.1.3 Storage environment ... 7
8.1.4 Transportation ... 7
8.2 Safety requirements ... 7
8.3 Flammability ... 8

9 Reference measurement devices ... 8
9.1 Pick Up Head ... 8
9.2 Measurement conditions ... 10
9.3 Normalized servo transfer function ... 10
9.4 Reference Servo for axial tracking ... 10
9.5 Reference Servo for radial tracking ... 12

Section 2 — Dimensional, mechanical and physical characteristics ... 13

10 Dimensional and physical characteristics of the case ... 13
10.1 General description of the case ... 13
10.2 Reference Planes of the case ... 13
10.3 Dimensions of the case ... 13
10.3.1 Overall dimensions ... 13
10.3.2 Location hole ... 14
10.3.3 Alignment hole ... 15
10.3.4 Reference surfaces ... 15
10.3.5 Spindle window ... 16
10.3.6 Head window ... 16
10.3.7 Detent for mis-insert protection ... 17
10.3.8 Detent for safe ejection ... 18
10.3.9 Detent for auto loading ... 19
10.3.10 Space for shutter opener ... 21
10.4 Mechanical characteristics ... 22
10.4.1 Material ... 22

--`,,```,,,,````-`-`,,`,,`,`,,`---

© ISO/IEC 2006 – All rights reserved

Copyright International Organization for Standardization
Provided by IHS under license with ISO
No reproduction or networking permitted without license from IHS
Not for Resale

10.4.2 Compliance 23

11 Dimensional characteristics of the disk 30
11.1 Overall dimensions 31
11.2 First transition area 31
11.3 Second transition area 31
11.4 Clamping Zone 31
11.5 Clamping plate 31
11.6 Third transition area 32
11.7 Fourth transition area 32
11.8 Fifth transition area 32
11.9 Information Zone 32
11.9.1 Sub-divisions of the Information Zone 33
11.9.2 Track and pits geometry 33
11.9.3 Track modes 34
11.9.4 Channel bit length 34
11.10 Rim area 34
11.11 Deflection 35
11.12 Runout 35
11.12.1 Axial runout 35
11.12.2 Radial runout 35
11.13 Label 35

12 Mechanical parameters of the disk 35
12.1 Mass 35
12.2 Moment of inertia 35
12.3 Dynamic imbalance 35
12.4 Sense of rotation 36

13 Optical parameters of the disk 36
13.1 Index of refraction 36
13.2 Thickness of the substrate 0 36
13.3 Thickness of the spacer 36
13.4 Angular deviation 36
13.5 Birefringence of the transparent substrate 36
13.6 Reflectivity 36

14 Interface between cartridge and drive 40
14.1 Clamping method 40
14.2 Clamping force 40
14.3 Capture cylinder 40
14.4 Disk position in operating condition 40

Section 3 — Operational Signals 42

15 High frequency signals 42
15.1 Modulated amplitude 42
15.2 Signal asymmetry 42
15.3 Cross-track signal 43
15.4 Quality of signals 43
15.4.1 Jitter 43
15.4.2 Random errors 44
15.4.3 Defects 44

16 Servo signals 44
16.1 Push-pull signal 44

Section 4 — Data Format 46

17 Data Format General 46

18 Data Frames 46
18.1 Identification Data 47
18.2 ID Error Detection Code 48
18.3 Copyright Management Information 48

--`,,```,,,,````-`-`,,`,,`,`,,`---

© ISO/IEC 2006 – All rights reserved

Copyright International Organization for Standardization
Provided by IHS under license with ISO
No reproduction or networking permitted without license from IHS

Not for Resale

18.4 Error Detection Code 48
19 Scrambled Frames 48
20 ECC Blocks 49
21 Recording Frames 51
22 Modulation 52
23 Physical Sectors 52
24 Suppress control of the d.c. component 53
Section 5 — Format of the Information Zones 55
25 General description of an Information Zone 55
26 Layout of the Information Zone 55
26.1 Physical Sector numbering 55
26.2 Lead-in Zone 56
26.2.1 Initial Zone 57
26.2.2 MI Zone 57
26.2.3 Buffer Zone 57
26.2.4 Control Data Zone 57
26.3 Middle Zone 60
26.4 Lead-out Zone 60
26.5 MI Backup Zone 60
Annex A (normative) **Compliance test** 61
Annex B (normative) **Measurement of the angular deviation α** 63
Annex C (normative) **Measurement of birefringence** 64
Annex D (normative) **Measurement of light reflectance** 67
Annex E (normative) **Tapered cone for disk clamping** 69
Annex F (normative) **Measurement of jitter** 70
Annex G (normative) **8-to-16 Modulation with RLL (2,10) requirements** 72
Annex H (informative) **Transportation** 82
Annex I (informative) **Measurement of the thickness of the spacer of Dual Layer disks** 83

© ISO/IEC 2006 – All rights reserved

Copyright International Organization for Standardization
Provided by IHS under license with ISO
No reproduction or networking permitted without license from IHS
Not for Resale

Foreword

ISO (the International Organization for Standardization) and IEC (the International Electrotechnical Commission) form the specialized system for worldwide standardization. National bodies that are members of ISO or IEC participate in the development of International Standards through technical committees established by the respective organization to deal with particular fields of technical activity. ISO and IEC technical committees collaborate in fields of mutual interest. Other international organizations, governmental and non-governmental, in liaison with ISO and IEC, also take part in the work. In the field of information technology, ISO and IEC have established a joint technical committee, ISO/IEC JTC 1.

International Standards are drafted in accordance with the rules given in the ISO/IEC Directives, Part 2.

The main task of the joint technical committee is to prepare International Standards. Draft International Standards adopted by the joint technical committee are circulated to national bodies for voting. Publication as an International Standard requires approval by at least 75 % of the national bodies casting a vote.

Attention is drawn to the possibility that some of the elements of this document may be the subject of patent rights. ISO and IEC shall not be held responsible for identifying any or all such patent rights.

ISO/IEC 25435 was prepared by Ecma TC 31 (as ECMA-365) and was adopted, under a special “fast-track procedure”, by Joint Technical Committee ISO/IEC JTC 1, *Information technology*, in parallel with its approval by national bodies of ISO and IEC.

© ISO/IEC 2006 – All rights reserved
Copyright International Organization for Standardization
Provided by IHS under license with ISO
No reproduction or networking permitted without license from IHS
Not for Resale

Introduction

Ecma Technical Committee TC 31 was established in 1984 for the standardization of Optical Disks and Optical Disk Cartridges (ODC). Since its establishment, the Committee has made major contributions to ISO/IEC SC 23 toward the development of International Standards for 80 mm, 90 mm, 120 mm, 130 mm, 300 mm, and 356 mm media. Numerous standards have been developed by TC 31 and published by Ecma International, almost all of which have also been adopted by ISO/IEC under the fast-track procedure as International Standards.

The need for further miniaturization had been recognized for use in portable electronic devices as a result of consumer acceptance of products based on previous Ecma CD-ROM and DVD-Read-Only Disk standards, ECMA-130, ECMA-267, ECMA-268 respectively.

In October 2004 a group of companies proposed to TC31 to develop an International Standard for the first 60 mm optical ROM disk. TC31 adopted this project and started the standardization work.

This disk is identified as Universal Media Disc (UMD™). (UMD™ is the trade mark of Sony Computer Entertainment Inc.)

© ISO/IEC 2006 – All rights reserved

Copyright International Organization for Standardization
Provided by IHS under license with ISO
No reproduction or networking permitted without license from IHS
Not for Resale

--`,,```,,,,````-`-`,,`,,`,`,,`---

Copyright International Organization for Standardization
Provided by IHS under license with ISO
No reproduction or networking permitted without license from IHS

Not for Resale

Data Interchange on 60 mm Read-Only ODC — Capacity: 1,8 Gbytes (UMD™)

Section 1 — General

1 Scope

This International Standard specifies the mechanical, physical and optical characteristics of a 60 mm, read-only ODC having a maximum capacity of 1,8 Gbytes. It specifies the physical format, the quality of the recorded signals, the format of the data and its modulation method, thereby allowing for information interchange by means of such ODCs.

This International Standard specifies two types of ODCs, Type A and Type B:

Type A: Single layer disk with maximum recorded capacity of 0,9 G-bytes;

Type B: Dual layer disk with maximum recorded capacity of 1,8 G-bytes.

Information interchange between systems also requires, at a minimum, agreement between the interchange parties upon the interchange code(s) and the specifications of the structure and labeling of the information on the interchanged ODCs. UMD™ is the trade mark of Sony Computer Entertainment Inc.

2 Conformance

2.1 Optical disk cartridge

A claim of conformance shall specify the Type of the ODC. An ODC shall be in conformance with this International Standard if it meets the mandatory requirements specified for its Type.

2.2 Generating system

A generating system shall be in conformance with this International Standard if the ODC it generates is in accordance with 2.1.

2.3 Receiving system

A receiving system shall be in conformance with this International Standard if it is able to handle both Types of ODC according to 2.1.

3 Normative references

The following referenced documents are indispensable for the application of this document. For dated references, only the edition cited applies. For undated references, the latest edition of the referenced document (including any amendments) applies.

© ISO/IEC 2006 – All rights reserved

Copyright International Organization for Standardization
Provided by IHS under license with ISO
No reproduction or networking permitted without license from IHS
Not for Resale

ISO 16143-1:2004, *Stainless steels for general purposes — Part 1: Flat products*

ECMA-287, *Safety of electronic equipment* — 2nd edition (December 2002)

4 Terms and definitions

For the purposes of this document, the following terms and definitions apply.

4.1
channel bit
elements by which, after modulation, the binary values ZERO and ONE are represented on the disk by pits

4.2
clamping zone
annular part of the substrate within which a clamping force is applied by a clamping device

4.3
Digital Sum Value
arithmetic sum obtained from a bit stream by allocating the decimal value 1 to bits set to ONE and the decimal value -1 to bits set to ZERO

4.4
Disk Reference Plane
plane defined by the perfectly flat annular surface of an ideal spindle onto which the Clamping Zone of the disk is clamped, and which is normal to the axis of rotation

4.5
Dual Layer disk
optical disk with a single entrance surface that gives access to a pair of recorded layers L0 and L1 which are located on substrates 0 and 1 respectively

4.6
dummy layer
recorded layer located on substrate 1 whose main data is all (00), i.e. dummy data

4.7
entrance surface
surface of substrate 0 onto which the optical beam first impinges

4.8
optical disk
disk that accepts and retains information in the form of pits in a recorded layer that can be read by an optical beam

4.9
physical sector number
serial number allocated to physical sectors on the disk

4.10
pit
embossed feature of the recorded layer which influences the optical phase of the incident light

4.11
read-only disk
optical disk in which the information has been recorded during manufacturing and may not be altered by subsequent recording systems

--`,,```,,,,````-`-`,,`,,`,`,,`---

© ISO/IEC 2006 – All rights reserved
Copyright International Organization for Standardization
Provided by IHS under license with ISO
No reproduction or networking permitted without license from IHS
Not for Resale

4.12
recorded layer
layer of the disk on, or in, which data is recorded

4.13
Reed-Solomon code
error detection and/or correction code

4.14
sector
smallest part of a track in the Information Zone that can be accessed independently of other addressable parts

4.15
Single Layer disk
optical disk having a single user data layer recorded on substrate 0, with substrate 1 containing only dummy data

4.16
spacer
transparent layer placed between two recorded layers or between a recorded layer and a dummy layer

4.17
substrate
layer of the disk which provides mechanical support of the recorded layer(s)

4.18
substrate 0
substrate located on the optical entrance side through which the optical beam accesses the recorded layer(s)

4.19
substrate 1
substrate located on the opposite side from the optical beam and is bonded to substrate 0, having no optical parameter requirement

4.20
track
360° turn of a continuous spiral

4.21
track pitch
distance between the centrelines of a pair of adjacent physical tracks, measured in radial direction

4.22
zone
annular area of the disk

5 Conventions and notations

5.1 Representation of numbers

— A measured value is rounded off to the least significant digit of the corresponding specified value. For instance, it implies that a specified value of 1,26 with a positive tolerance of + 0,01 and a negative tolerance of - 0,02 allows a range of measured values from 1,235 to 1,275.

— Numbers in decimal notations are represented by the digits 0 to 9.

© ISO/IEC 2006 – All rights reserved

Copyright International Organization for Standardization
Provided by IHS under license with ISO
No reproduction or networking permitted without license from IHS
Not for Resale

— Numbers in hexadecimal notation are represented by the hexadecimal digits 0 to 9 and A to F in parentheses.

— The setting of bits is denoted by ZERO and ONE.

— Numbers in binary notations and bit patterns are represented by strings of digits 0 and 1, with the most significant bit shown to the left.

— Negative values of numbers in binary notation are given as Two's complement.

— In each field the data is recorded so that the most significant byte (MSB), identified as Byte 0, is recorded first and the least significant byte (LSB) last.

— In a field of 8n bits, bit b(8n-1) shall be the most significant bit (msb) and bit b0 the least significant bit (lsb).

— Bit b(8n-1) is recorded first.

5.2 Names

The names of entities, e.g. specific tracks, fields, zones, etc. are given a capital initial.

6 List of acronyms

a.c.	alternate current
BP	Byte Position
BPF	Band Pass Filter
CLV	Constant Linear Velocity
CPR_MAI	Copyright Management Information
d.c.	direct current
DL	Dual Layer
DSV	Digital Sum Value
ECC	Error Correction Code
EDC	Error Detection Code
EQ	Equalizer
FWHM	Full Width at Half Maximum
HF	High Frequency
ID	Identification Data
IED	ID Error Detection code
IR	Index of Refraction
LPF	Low-Pass Filter

© ISO/IEC 2006 – All rights reserved
Copyright International Organization for Standardization
Provided by IHS under license with ISO
No reproduction or networking permitted without license from IHS
Not for Resale

LSB	Least Significant Byte
lsb	least significant bit
MI	Media Information
MSB	Most Significant Byte
msb	most significant bit
NRZ	Non Return to Zero
NRZI	Non Return to Zero Inverted
OTP	Opposite Track Path
PBS	Polarizing Beam Splitter
PE	Phase Encoded
PI	Parity of the Inner
PLL	Phase-Locked Loop
PO	Parity of the Outer
PP	Push-Pull
PTP	Parallel Track Path
PUH	Pick Up Head
RIN	Relative Intensity Noise
RLL	Run Length Limited
RS	Reed-Solomon
RZ	Return to Zero
SL	Single Layer
SYNC	Synchronisation

7 General description of the ODC

The optical disk cartridge which is the subject of this International Standard consists of a case containing an optical disk.

The case is a protective enclosure for the disk. It has access windows and it may be covered by a shutter.

The optical disk that is the subject of this International Standard consists of two substrates bonded together by a spacer, so that the recorded layers are on the inside. The centring of the disk is performed on the edge of the centre hole of substrate 0. Clamping is performed in the Clamping Zone by the mageto-static force on the clamping plate provided by the clamping mechanism of the drive. This International Standard specifies the following Types (see Figure 1):

© ISO/IEC 2006 – All rights reserved

Copyright International Organization for Standardization
Provided by IHS under license with ISO
No reproduction or networking permitted without license from IHS
Not for Resale

Type A: Single layer disk with maximum recorded capacity of 0,9 G-bytes recorded on substrate 0. Substrate 1 contains dummy data.

Type B: Dual layer disk with maximum recorded capacity of 1,8 G-bytes. All data is accessed through substrate 0.

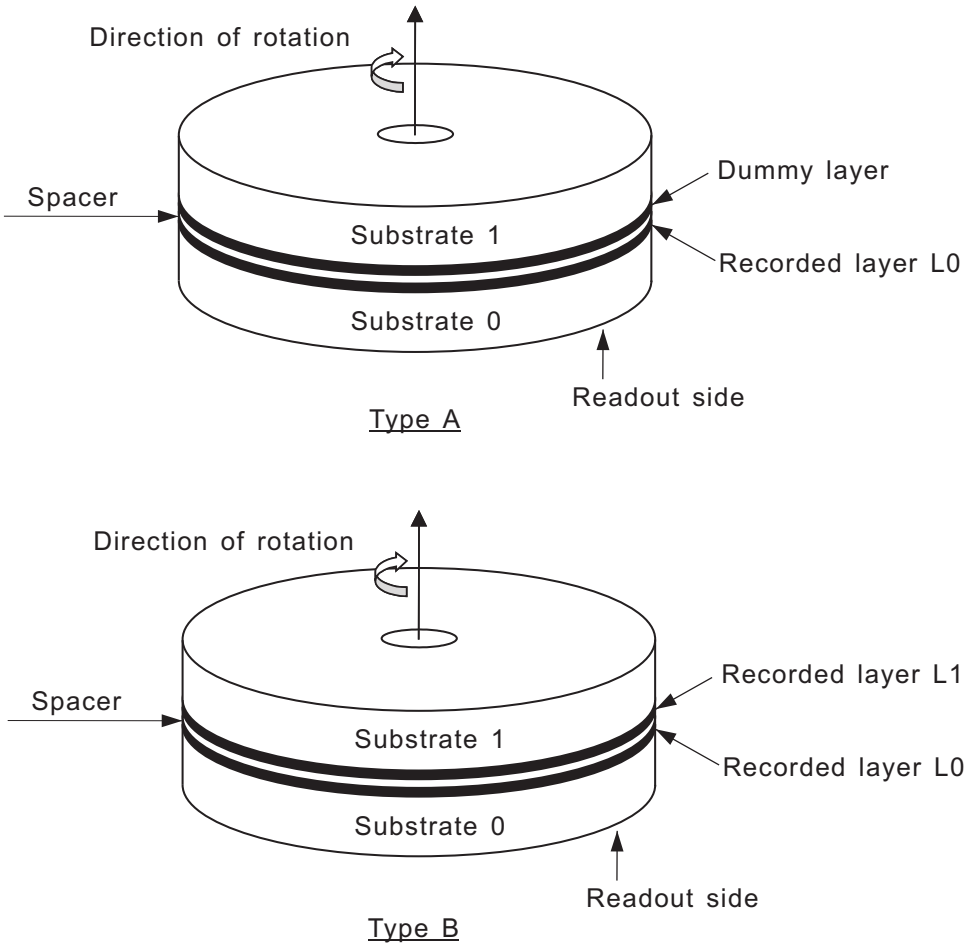

Figure 1 — Types of 60 mm Read-Only disks

8 Environments and Safety

8.1 Environments

8.1.1 Test environment

The test environment is the environment where the air immediately surrounding the disk has the following properties.

	a) For dimensional measurements	b) For the other measurements
temperature	: 23 °C ± 2 °C	15 °C to 35 °C
relative humidity	: 45 % to 55 %	45 % to 75 %
atmospheric pressure	: 86 kPa to 106 kPa	86 kPa to 106 kPa

© ISO/IEC 2006 – All rights reserved
Copyright International Organization for Standardization
Provided by IHS under license with ISO
No reproduction or networking permitted without license from IHS
Not for Resale

No condensation on or in the case or cartridge shall occur. Before testing, the case or cartridge shall be conditioned in this environment for 48 hours minimum. Unless otherwise stated, all tests and measurements shall be made in this test environment.

8.1.2 Operating environment

This International Standard requires that an optical disk which meets all mandatory requirements in the specified test environment provides data interchange over the specified ranges of environmental parameters in the operating environment.

Disks used for data interchange shall be operated under the following conditions, when mounted in the drive supplied with voltage and measured on the outside surface of the disk.

The disk exposed to storage conditions shall be conditioned in the operating environment for at least two hours before operating.

temperature	: - 25 °C to 70 °C
relative humidity	: 3 % to 95 %
absolute humidity	: 0,5 g/m^3 to 60 g/m^3
sudden change of temperature	: 50 °C max.
sudden change of relative humidity	: 30 % max.

There shall be no condensation of moisture on the disk.

8.1.3 Storage environment

The storage environment is the environment where the air immediately surrounding the optical disk shall have the following properties.

temperature	: - 20 °C to 50 °C
relative humidity	: 5 % to 90 %
absolute humidity	: 1 g/m^3 to 30 g/m^3
atmospheric pressure	: 75 kPa to 106 kPa
temperature variation	: 15 °C/h max.
relative humidity variation	: 10 %/h max.

8.1.4 Transportation

This International Standard does not specify requirements for transportation; guidance is given in Annex H.

8.2 Safety requirements

The disk shall satisfy the requirements of Standard ECMA-287, when used in the intended manner or in any foreseeable use in an information system.

© ISO/IEC 2006 – All rights reserved

Copyright International Organization for Standardization
Provided by IHS under license with ISO
No reproduction or networking permitted without license from IHS
Not for Resale

8.3 Flammability

The disk shall be made from materials that comply with the flammability class for HB materials, or better, as specified in Standard ECMA-287.

9 Reference measurement devices

The reference measurement devices shall be used for the measurements of optical parameters for conformance with this International Standard. The critical components of these devices have specific properties defined in this clause.

9.1 Pick Up Head

The optical system for measuring the optical parameters is shown in Figure 2. As far as the optical characteristics described in this clause are satisfied, the optical set-up may differ from one described in Figure 2. The detected light reflected from the entrance surface of the disk shall be minimized so as not influencing the accuracy of measurement. The combination of the polarizing beam splitter C with the quarter-wave plate D separates the incident optical beam and the beam reflected by the optical disk F. The beam splitter C shall have a p-s intensity/reflectance ratio of at least 100. Optics G generates an astigmatic difference and collimates the light reflected by the recorded layer of the optical disk F for astigmatic focusing and read-out. The position of the quadrant photo detector H shall be adjusted so that the light spot becomes a circle the centre of which coincides with the centre of the quadrant photo detector H when the objective lens is focused on the recorded layer. An example of such a photo detector H is shown in Figure 2. The dimensions *a* and *b* equal M times 7,7 µm to 9,3 µm, where M is the transversal magnification factor from the disk to its conjugate plane near the quadrant photo detector H.

© ISO/IEC 2006 – All rights reserved
Copyright International Organization for Standardization
Provided by IHS under license with ISO
No reproduction or networking permitted without license from IHS
Not for Resale

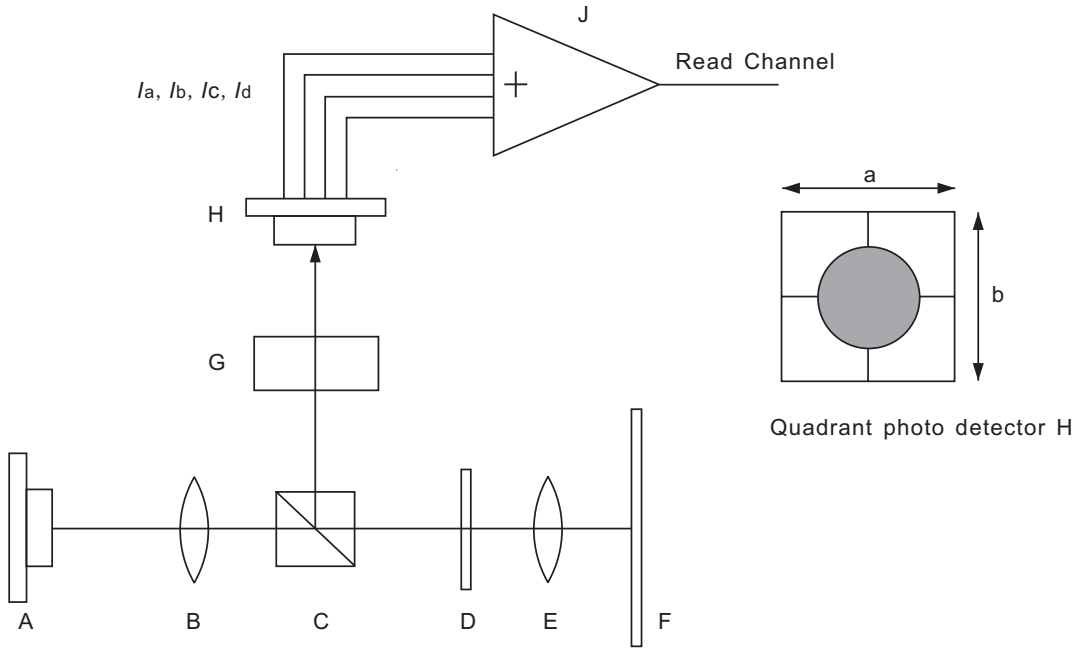

A	Laser diode	F	Optical disk
B	Collimator lens method	G	Optics for the astigmatic focusing method
C	Polarizing beam splitter	H	Quadrant photo detector
D	Quarter-wave plate	I_a, I_b, I_c, I_d	Output from the quadrant photo detector
E	Objective lens	J	d. c. Coupled amplifier

Figure 2 — Optical system for PUH

The characteristics of the PUH shall be as follows.

- Wavelength (λ)	660 nm $\pm$ 5 nm
- Polarization	circular
- Polarizing beam splitter	shall be used unless otherwise stated
- Numerical aperture	0,64 $\pm$ 0,01
- Light intensity at the rim of the pupil of the objective lens	30 % to 40 % of the maximum intensity level in radial direction, and over 85 % of the maximum intensity level in tangential direction
- Wave front aberration after passing through an ideal substrate	0,033 λ rms max
- Normalized detector size on a disk	60 $\mu m^2 < S / M^2 < 87\ \mu m^2$ where S is the total surface of the photo detector of the PUH and M is the transversal magnification.
- Relative intensity noise (RIN)	- 134 dB/Hz max.

--`,,```,,,,````-`-`,,`,,`,`,,`---
© ISO/IEC 2006 – All rights reserved
Copyright International Organization for Standardization
Provided by IHS under license with ISO
No reproduction or networking permitted without license from IHS
Not for Resale

where

RIN = 10 log (P_{ac} / P_{dc})

P_{ac}: a.c. light power density per Hz

P_{dc}: d.c. light power

9.2 Measurement conditions

The measuring conditions for operational signals shall be as follows.

Scanning velocity at a Channel bit rate of 26,15625 Mbits/s	for any disk Type: 3,62 m/s ± 0,03 m/s
Clamping force	1,0 N ~ 2,5 N
Taper cone angle	30,0° ± 0,5° (see Annex E)
CLV servo characteristics	f (- 3 dB), closed loop bandwidth: 5 Hz
Focusing method	astigmatic method
Tracking method	push-pull method

9.3 Normalized servo transfer function

In order to specify the servo system for axial and radial tracking, a function Hs is used (equation 1). It specifies the nominal values of the open-loop transfer function H of the Reference Servo(s) in the frequency range 19,8 Hz to 10 kHz.

$$H_s(i\omega) = \frac{1}{3} \times \left(\frac{\omega_0}{i\omega} \right)^2 \times \left(1 + \frac{3i\omega}{\omega_0} \right) \Big/ \left(1 + \frac{i\omega}{3\omega_0} \right) \quad (1)$$

where

$\omega = 2\pi f$

$\omega_0 = 2\pi f_0$

$i = \sqrt{-1}$

f_0 is the 0 dB crossover frequency of the open loop transfer function. The crossover frequencies of the lead-lag network of the servo are given by

lead break frequency: $f_1 = f_0 \times 1/3$

lag break frequency: $f_2 = f_0 \times 3$

9.4 Reference Servo for axial tracking

For an open loop transfer function H of the Reference Servo for axial tracking, $|1+H|$ is limited as schematically shown by the shaded surface of Figure 3.

-`,,```,,,,````-`-`,,`,,`,`,,`---

© ISO/IEC 2006 – All rights reserved
Copyright International Organization for Standardization
Provided by IHS under license with ISO
No reproduction or networking permitted without license from IHS
Not for Resale

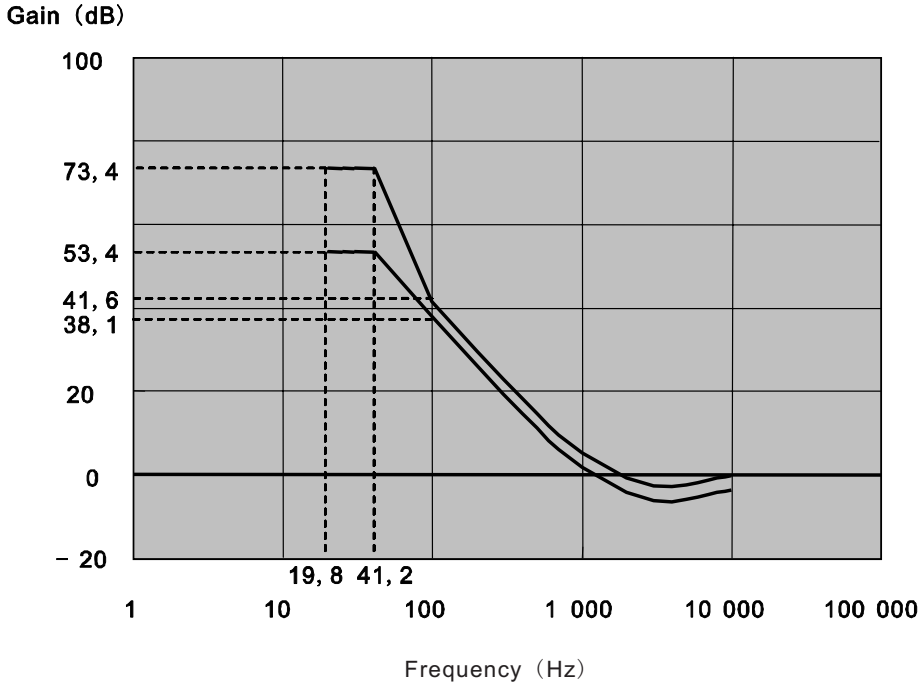

Figure 3 — Reference Servo for axial tracking

Bandwidth 100 Hz to 10 kHz

$|1 + H|$ shall be within 20 % of $|1+H_S|$.

The crossover frequency $f_0 = \omega_0 / 2\pi$ shall be specified by equation (2), where α_{max} shall be 1,5 times larger than the expected maximum axial acceleration of 6 m/s^2. The tracking error e_{max} shall not exceed 0,23 µm. Thus the crossover frequency f_0 shall be

$$f_0 = \frac{1}{2\pi}\sqrt{\frac{3\alpha_{max}}{e_{max}}} = \frac{1}{2\pi}\sqrt{\frac{6\times 1{,}5\times 3}{0{,}23\times 10^{-6}}} = 1{,}7 \text{ kHz} \qquad (2)$$

The axial tracking error e_{max} is the peak deviation measured axially above or below the 0 level.

$|1 + H|$ shall be within the limits defined by the following four points.

38,1 dB at 100 Hz ($|1 + Hs|$ - 20 % at 100 Hz)

53,4 dB at 41,2 Hz ($|1 + Hs|$ - 20 % at 41,2 Hz)

73,4 dB at 41,2 Hz ($|1 + Hs|$ - 20 % at 41,2 Hz add 20 dB)

41,6 dB at 100 Hz ($|1 + Hs|$ + 20 % at 100 Hz)

Bandwidth 19,8 Hz to 41,2 Hz

$|1 + H|$ shall be between 53,4 dB and 73,4 dB.

--`,,```,,,,````-`-`,,`,,`,`,,`---
© ISO/IEC 2006 – All rights reserved
Copyright International Organization for Standardization
Provided by IHS under license with ISO
No reproduction or networking permitted without license from IHS
Not for Resale

9.5 Reference Servo for radial tracking

For an open-loop transfer function H of the Reference Servo for radial tracking, |1+H| is limited as schematically shown by the shaded surface of Figure 4.

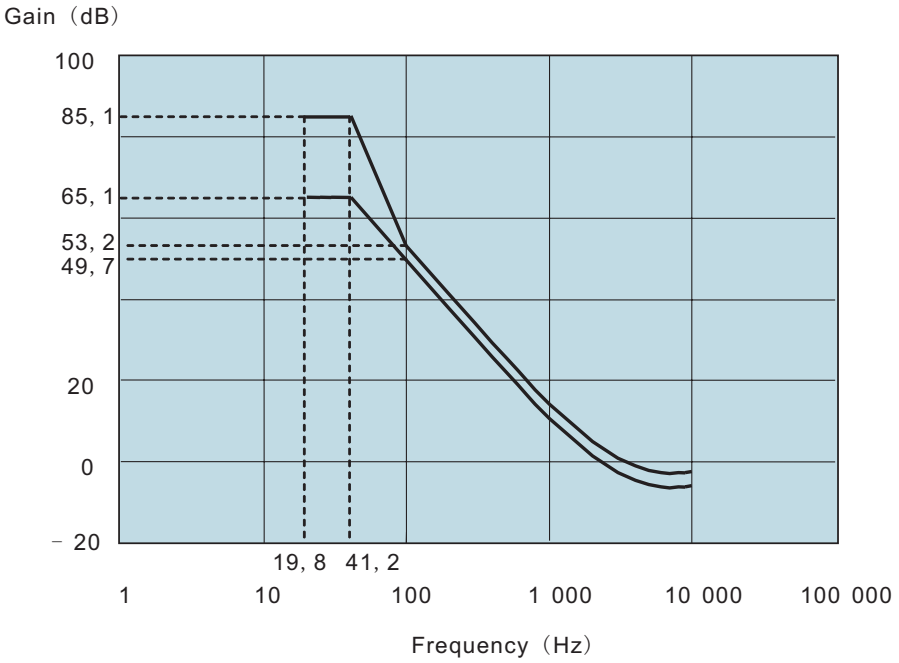

Figure 4 — Reference Servo for Radial Tracking

Bandwidth from 100 Hz to 10 kHz

| 1 + H | shall be within 20 % of | 1 + Hs |.

The crossover frequency $f_0 = \omega_0 / 2\pi$ shall be specified by equation (3), where α_{max} shall be 1,5 times larger than the expected maximum radial acceleration of 3,34 m/s^2. The tracking error emax shall not exceed 0,022 µm. Thus the crossover frequency f_0 shall be

$$f_0 = \frac{1}{2\pi}\sqrt{\frac{3\alpha_{max}}{e_{max}}} = \frac{1}{2\pi}\sqrt{\frac{3{,}34 \times 1{,}5 \times 3}{0{,}022 \times 10^{-6}}} = 4{,}2\ \text{kHz} \qquad (3)$$

The radial tracking error is the peak deviation measured radially inwards or outwards the 0 level.

Bandwidth from 19,8 Hz to 100 Hz

| 1 + H | shall be within the limits defined by the following four points.

49,7 dB at 100 Hz (| 1 + Hs | - 20 % at 100 Hz)

65,1 dB at 41,2 Hz (| 1 + Hs | - 20 % at 41,2 Hz)

85,1 dB at 41,2 Hz (| 1 + Hs | - 20 % at 41,2 Hz add 20 dB)

53,2 dB at 100 Hz (| 1 + Hs | + 20 % at 100 Hz)

Bandwidth from 19,8 Hz to 41,2 Hz

| 1 + H | shall be between 65,1 dB and 85,1 dB.

© ISO/IEC 2006 – All rights reserved
Copyright International Organization for Standardization
Provided by IHS under license with ISO
No reproduction or networking permitted without license from IHS
Not for Resale

Section 2 — Dimensional, mechanical and physical characteristics

10 Dimensional and physical characteristics of the case

10.1 General description of the case

The case is a rigid protective container. It shall have a spindle window and a head window, through which the spindle hub and the optical head of the drive can access to the disk respectively. A shutter mechanism may be applicable as necessary. The case shall have features for mis-insertion-protection, safe ejection and autoloading. See Figure 5.

10.2 Reference Planes of the case

The dimensions of the case shall be referred to three orthogonal Reference Planes X, Y and Z. The case shall be constrained such that four reference surfaces S1 to S4 lie in plane Z when measuring those dimensions of the case in 10.3 which are referenced to this plane. The intersection of the three planes defines the centre of the location hole. The centre of the alignment hole shall lie in the X plane. A dimension of a feature referenced to one of the planes shall be the shortest distance from the feature to the plane. See Figure 6.

10.3 Dimensions of the case

The dimensions of the case shall be measured in the test environment. The dimensions of the case in an operating environment can be estimated from the dimensions specified in this clause.

10.3.1 Overall dimensions

The specifications in this sub-clause are referred to Figure 7.

The total length of the case shall be

L_1 = 65,00 mm ± 0,15 mm

The distance from the top of the case to the Reference Plane X shall be

L_2 = 58,30 mm ± 0,10 mm

The total width of the case shall be

L_3 = 64,00 mm ± 0,10 mm

The distance from the right hand side of the case to the Reference Plane Y shall be

L_4 = 11,50 mm ± 0,10 mm

The top edge of the case shall be an arc of a radius

R_1 = 32,00 mm ± 0,10 mm

The bottom edge shall be an arc of a radius

R_2 = 70,00 mm ± 0,20 mm

with its corners rounded by

R_3 = 5,00 mm ± 0,15 mm

--`,,```,,,,````-`-`,,`,,`,`,,`---

© ISO/IEC 2006 – All rights reserved

Copyright International Organization for Standardization
Provided by IHS under license with ISO
No reproduction or networking permitted without license from IHS
Not for Resale

The area surrounded by R_1,

$$L_5 = 3{,}00\ \text{mm}\ ^{+0{,}10\ \text{mm}}_{-0{,}00\ \text{mm}}$$

from the top the of the case and

R_4 = 29,90 mm ± 0,10 mm

with its centre measured by

L_6 = 20,50 mm ± 0,05 mm

from the Reference Plane X and

L_7 = 26,30 mm ± 0,05 mm

from the Reference Plane Y

shall be chamfered with its depth of

L_8 = 0,40 mm ± 0,10 mm

The outline edge of the case including the edge on chamfered area shall be rounded by

R_5 = 0,30 mm ± 0,10 mm

The thickness of the case shall be

L_9 = 4,35 mm max.

within the area bounded by

D_1 = 50,00 mm with its centre measured by

L_6 from the Reference Plane X and L_7, and

L_9 = 4,20 mm ± 0,10 mm

outside of the area defined by D_1.

10.3.2 Location hole

The specifications in this sub-clause are referred to Figure 7.

The centre of the location hole shall coincide with the intersection of the Reference Planes X, Y and Z.

The diameter of the hole shall be

$$D_2 = 3{,}60\ \text{mm}\ ^{+0{,}07\ \text{mm}}_{-0{,}00\ \text{mm}}$$

The location hole shall extend below plane Z by

L_{10} = 3,60 mm min.

--`,,```,,,,````-`-`,,`,,`,`,,`---

Copyright International Organization for Standardization
Provided by IHS under license with ISO
No reproduction or networking permitted without license from IHS

© ISO/IEC 2006 – All rights reserved

Not for Resale

The lead-in edges shall be rounded with a radius

$$R_6 = 0{,}20\ \text{mm}\ {}^{+0{,}00\ \text{mm}}_{-0{,}10\ \text{mm}}$$

The radius of the inner corner on the bottom of the hole shall be

R_7 = 0,50 mm max.

10.3.3 Alignment hole

The specifications in this sub-clause are referred to Figure 7.

The centre of the alignment hole shall lie in the Reference Plane X at a distance

L_{11} = 41,00 mm ± 0,10 mm

from the Reference Plane Y.

The alignment hole shall have a substantially rectangular shape whose the right and left edges shall be shorter. Its dimensions shall be

$$L_{12} = 3{,}60\ \text{mm}\ {}^{+0{,}07\ \text{mm}}_{-0{,}00\ \text{mm}}$$

$$L_{13} = 4{,}60\ \text{mm}\ {}^{+0{,}20\ \text{mm}}_{-0{,}00\ \text{mm}}$$

The right and left edges shall be arcs of radius

R_8 = 1,80 mm min.

with its centre locating on the intersection of the Reference Plane X and the Reference Plane Z.

The location hole shall extend below plane Z by L_{10}.

The edge of both holes shall be rounded with a radius R_6.

The radius of the inner corner on the bottom of the hole shall be R_7.

10.3.4 Reference surfaces

The specifications in this sub-clause are referred to Figure 8.

The case shall contain four reference surfaces S1, S2, S3 and S4.

Surfaces S1 and S2 shall be circular with a diameter

D_3 = 5,60 mm ± 0,20 mm

S1 shall be centred on the centre of the location hole, and S2 shall be centred on the centre of the alignment hole.

Surfaces S3 and S4 shall be circular with a diameter

D_4 = 4,00 mm ± 0,20 mm

© ISO/IEC 2006 – All rights reserved

Copyright International Organization for Standardization
Provided by IHS under license with ISO
No reproduction or networking permitted without license from IHS
Not for Resale

with their centres located at

L_{14} = 47,00 mm ± 0,20 mm

measured from the Reference Plane X and

L_{15} = 20,50 mm ± 0,20 mm

referred to the centreline measured from the Reference Plane Y by L_6

10.3.5 Spindle window

The specifications in this sub-clause are referred to Figure 9.

The spindle window shall be circular and its diameter shall be

$$D_5 = 18{,}00\ \text{mm}\ {}^{+\,0{,}08\ \text{mm}}_{-\,0{,}00\ \text{mm}}$$

with its centre shall locate at a distance L_7

on the centreline measured from the Reference Plane Y by L_6.

The edge of the window on the surface of the case shall be rounded by

$$R_9 = 0{,}20\ \text{mm}\ {}^{+\,0{,}00\ \text{mm}}_{-\,0{,}10\ \text{mm}}$$

10.3.6 Head window

The specifications in this sub-clause are referred to Figure 9.

The head window shall have a substantially rectangular shape bounded by

$$L_{16} = 35{,}80\ \text{mm}\ {}^{+\,0{,}10\ \text{mm}}_{-\,0{,}00\ \text{mm}}$$

from the Reference Plane X,

$$L_{17} = 9{,}80\ \text{mm}\ {}^{+\,0{,}20\ \text{mm}}_{-\,0{,}00\ \text{mm}}$$

from the Reference Plane Y and

$$L_{18} = 17{,}40\ \text{mm}\ {}^{+\,0{,}00\ \text{mm}}_{-0{,}10\ \text{mm}}$$

from the Reference Plane X.

At the left hand side of the window, the case surface shall be recessed by

L_{19} = 2,20 mm min.

from the Reference Plane Z.

--`,,```,,,,````-`-`,,`,,`,`,,`---
Copyright International Organization for Standardization
Provided by IHS under license with ISO
No reproduction or networking permitted without license from IHS
Not for Resale
© ISO/IEC 2006 – All rights reserved

The top side of the window shall be chamfered by

$$L_{20} = 0{,}60\ \text{mm}\ {}^{+0{,}10\ \text{mm}}_{-0{,}00\ \text{mm}}$$

and its chamfered edge on the surface of the case shall locate at a distance

$$L_{21} = 36{,}40\ \text{mm}\ {}^{+0{,}15\ \text{mm}}_{-0{,}00\ \text{mm}}$$

At the left hand side of the window, this chamfered surface shall extend to

$$L_{22} = 34{,}5\ \text{mm}\ {}^{+0{,}10\ \text{mm}}_{-0{,}00\ \text{mm}}$$

The bottom side of the window shall be chamfered by

L_{23} = 0,60 mm ± 0,10 mm

The edge made of the bottom side of the window and the left hand side of the case shall be chamfered by

L_{24} = 1,50 mm min.

The edge made by the chamfered area and the left hand side of the case shall be rounded by

R_{10} = 1,00 mm ± 0,10 mm

The edge made by the chamfered area and the bottom side of the window shall be rounded by

R_{11} = 1,00 mm min.

The corners on the right hand side of the window shall be rounded by

R_{12} = 0,50 mm max.

The edge on the right hand side of the window on the surface of the case shall be rounded by

R_{13} = 0,20 mm ± 0,10 mm

10.3.7 Detent for mis-insert protection

The specifications in this sub-clause are referred to Figure 10.

The right hand side of the case shall have a detent to prevent the case from being inserted in the drive upside-down.

The area located at a distance

L_{25} = 17,30 mm ± 0,10 mm

from the Reference Plane X and bounded by

$$L_{26} = 3{,}60\ \text{mm}\ {}^{+0{,}15\ \text{mm}}_{-0{,}00\ \text{mm}}$$

and

$$L_{27} = 2{,}20\ \text{mm}\ {}^{+0{,}15\ \text{mm}}_{-0{,}00\ \text{mm}}$$

© ISO/IEC 2006 – All rights reserved

Copyright International Organization for Standardization
Provided by IHS under license with ISO
No reproduction or networking permitted without license from IHS
Not for Resale

shall be recessed by

$$L_{28} = 3{,}40\ \text{mm}\ {}^{+0{,}20\ \text{mm}}_{-0{,}00\ \text{mm}}$$

from the Reference Plane Z.

The edge on the side of the case shall be rounded by

$$R_{14} = 0{,}20\ \text{mm}\ {}^{+0{,}10\ \text{mm}}_{-0{,}00\ \text{mm}}$$

The inner corners on the side of the case shall be rounded by

R_{15} = 0,60 mm max.

The inner corners on the recessed area shall be rounded by

R_{16} = 0,20 mm max.

10.3.8 Detent for safe ejection

The specifications in this sub-clause are referred to Figure 11.

The case shall have a detent at the right corner at the bottom surface to prevent from being dropped out of the cartridge compartment in the drive while eject operation.

The area on the corner of the case measured by

$$L_{29} = 3{,}40\ \text{mm}\ {}^{+0{,}20\ \text{mm}}_{-0{,}00\ \text{mm}}$$

to

$$L_{30} = 0{,}80\ \text{mm}\ {}^{+0{,}00\ \text{mm}}_{-0{,}10\ \text{mm}}$$

from the Reference Plane Z shall be recessed in the substantially rhombic shape defined by

$$L_{31} = 1{,}40\ \text{mm}\ {}^{+0{,}20\ \text{mm}}_{-0{,}00\ \text{mm}}$$

$$L_{32} = 1{,}80\ \text{mm}\ {}^{+0{,}20\ \text{mm}}_{-0{,}00\ \text{mm}}$$

L_{33} = 2,50 mm max.

L_{34} = 4,70 mm ± 0,10 mm

$$A_1 = 150\ ^\circ\ {}^{+2\ ^\circ}_{-0\ ^\circ}$$

The corner on the right hand side of the case shall be rounded by

R_{17} = 1,00 mm ± 0,10 mm

© ISO/IEC 2006 – All rights reserved
Copyright International Organization for Standardization
Provided by IHS under license with ISO
No reproduction or networking permitted without license from IHS
Not for Resale

The corners inside the reseed area shall be rounded by

R_{18} = 0,30 mm max.

10.3.9 Detent for auto loading

The specifications in this sub-clause are referred to Figure 12.

The case shall have two substantially symmetrical detents intended for autoloading.

On left hand side of the case, there shall be a slot with its width of

$$L_{35} = 2{,}80\ \text{mm}\ {}^{+0{,}15\ \text{mm}}_{-0{,}00\ \text{mm}}$$

at

$$L_{36} = 0{,}70\ \text{mm}\ {}^{+0{,}00\ \text{mm}}_{-0{,}10\ \text{mm}}$$

measured from the Reference Plane Z, at

L_{37} = 42,30 mm ± 0,10 mm

measured from the Reference Plane X.

The width of L_{33} shall extend to

L_{38} = 38,70 mm ± 0,15 mm

measured from plane X and shall be narrower as specified by L_{19} and

$$L_{39} = 1{,}10\ \text{mm}\ {}^{+0{,}00\ \text{mm}}_{-0{,}10\ \text{mm}}$$

Inside the slot on the left hand side, the case shall have detent of which profile shall be defined by

the straight line (referred as Line A) specified by L_{37},

the arc (referred as Arc B) which shall end at distance

L_{40} = 1,50 mm ± 0,10 mm

measured from Line A,

the arc (referred as Arc CL) specified by

R_{19} = 31,50 mm ± 0,10 mm

with its centre locating at L_7 from X plane and L_6 from Y plane,

which one end at distance

L_{41} = 2,80 mm ± 0,10 mm

--`,,```,,,,````-`-`,,`,,`,`,,`---

© ISO/IEC 2006 – All rights reserved

Copyright International Organization for Standardization
Provided by IHS under license with ISO
No reproduction or networking permitted without license from IHS
Not for Resale

measured from the side of the case and the other end at distance

$$L_{42} = 1{,}80\ \text{mm}\ {}^{+0{,}20\ \text{mm}}_{-0{,}00\ \text{mm}}$$

measured from the side of the case,

the straight line (referred as Line D) which shall connect the Arc B and Arc CL,

the straight line (referred as Line EL), parallel to plane Y, which shall share the one end with Arc CL at the point specified by L_{42} and shall have the other end specified by

L_{43} = 3,00 mm ± 0,15 mm

and

L_{44} = 30,30 mm ± 0,15 mm

measured from X plane,

the straight line (referred as Line FL) which shall share the one end with Line EL at the point specified by L_{43} and L_{44}, and the other end with the outline of the case at the point specified by L_{44}.

The corner made by the outline of the case and Line A shall be rounded by

$$R_{20} = 0{,}10\ \text{mm}\ {}^{+0{,}15\ \text{mm}}_{-0{,}05\ \text{mm}}$$

The corner made by Line A and Arc B shall be rounded by

R_{21} = 0,20 mm max.

The corner made by Line D and Arc CL shall be rounded by

R_{22} = 1,00 mm ± 0,10 mm

The corner made by Arc CL and Line EL shall be rounded by

R_{23} = 5,00 mm ± 0,10 mm

On right hand side of the case, there shall be a slot with its width of L_{35} at L_{37} measured from plane Z, at L_{37} measured from plane X.

The width of L_{35} shall extend to

L_{45} = 28,30 mm ± 0,10 mm

measured from plane X on the side of the case and shall extend by

$$L_{46} = 1{,}00\ \text{mm}\ {}^{+0{,}15\ \text{mm}}_{-0{,}00\ \text{mm}}$$

inside the slot.

Inside the slot on the right hand side, the case shall have detent of which profile shall be defined by

the straight line (referred as Line A) specified by L_{37},

© ISO/IEC 2006 – All rights reserved
Copyright International Organization for Standardization
Provided by IHS under license with ISO
No reproduction or networking permitted without license from IHS
Not for Resale

the arc (referred as Arc B) which shall end at distance L_{40} measured from Line A,

the arc (referred as Arc CR) specified by R_{19} with its centre locating at L_7 from X plane and L_6 from Y plane,

whose one end shall locate at distance L_{41} measured from the side of the case and the other end at distance

$$L_{47} = 2{,}10\ \text{mm}\ {}^{+0{,}15\ \text{mm}}_{-0{,}00\ \text{mm}}$$

measured from the right hand side of the case,

the straight line (referred as Line D) which shall connect the Arc B and Arc CR,

the straight line (referred as Line ER), parallel to plane Y with the distance

L_{48} = 1,40 mm ± 0,10 mm

from the right hand side of the case, whose one end at the distance L_{45} and

L_{49} = 1,80 mm max.

from the Reference Plane X and the other end at the distance L_{45} and L_{46} from the Reference Plane X,

the straight line (referred as Line GR), defined as the tangential line of Arc CR, which shall extend to share the cross point specified L_{45} and L_{49} with Line ER,

the straight line (referred as Line FR), which shall connect the inner edge of the slot specified by L_{45} and L_{46}, and the outline of the case at the point measured by L_{45}.

The corner made by the outline of the case and Line A shall be rounded by R_{20}.

The corner made by Line A and Arc B shall be rounded by R_{21}.

The corner made by Line D and Arc CR shall be rounded by R_{22}.

The corner made by Arc CR and Line GR shall be rounded by R_{23}.

The corner made by Line GR and Line ER shall be rounded by

R_{24} = 0,10 mm min.

The corner made by Line FR and the outline of the case shall be rounded by R_{23}.

$$R_{25} = 0{,}20\ \text{mm}\ {}^{+0{,}10\ \text{mm}}_{-0{,}00\ \text{mm}}$$

10.3.10 Space for shutter opener

The specifications in this sub-clause are referred to Figure 13.

The case shall have a recessed area on its left-hand side, in which the shutter opener on the drive is held.

The area on the corner of the case measured by L_{19} to

L_{50} = 1,70 mm min.

© ISO/IEC 2006 – All rights reserved

Copyright International Organization for Standardization
Provided by IHS under license with ISO
No reproduction or networking permitted without license from IHS
Not for Resale

shall be recessed in the shape of which profile shall be defined by

the straight line (referred as L_a) starting at the point measured by

L_{51} = 6,50 mm max.

from the Reference Plane X on the left-hand side of the case to the ending at the another point specified by

L_{52} = 8,30 mm max.

measured from the Reference Plane X and

L_{53} = 1,80 mm min.

measured from the left-hand side of the case,

the straight line (referred as L_b) which shall share the one end with L_a at the point specified by L_{52} and L_{53} and shall extend by

L_{54} = 10,80 mm ± 0,10 mm

measured from the Reference Plane X in parallel to the Reference Plane Y,

the straight line (referred as L_c) which shall share the one end at the point specified by L_{54} with L_b and shall extend to the point specified by

L_{55} = 13,80 mm ± 0,10 mm

measured from the Reference Plane X and

L_{56} = 0,80 mm min.

measured form the right-hand side of the case,

the straight line (referred as L_d) which shall share the one end with L_c at the point specified by L_{55} and L_{56} and shall extend to the head window in parallel to the Reference Plane Y.

The intersection of L_d and the headwindow at its chamfered edge specified by L_{24} shall be locate

L_{57} = 16,70 ± 0,10 mm

measured from the Reference Plane X.

The three corners made by L_a and L_b, L_b and L_c, L_c and L_d shall be rounded by

R_{26} = 2,00 mm ± 0,10 mm.

The corner made by L_d and the head window at the chamfered edge on the head window,

shall be rounded by

R_{27} = 0,50 mm ± 0,10 mm.

10.4 Mechanical characteristics

10.4.1 Material

The case shall be constructed from any suitable materials such that it meets the requirements of this International Standard.

--`,,```,,,,````-`-`,,`,,`,`,,`---

© ISO/IEC 2006 – All rights reserved
Copyright International Organization for Standardization
Provided by IHS under license with ISO
No reproduction or networking permitted without license from IHS
Not for Resale

10.4.2 Compliance

The cartridge shall meet the requirement of the compliance (flexibility) test defined in Annex A. The requirement guarantees that a cartridge can be constrained in the proper plane of operation within the drive.

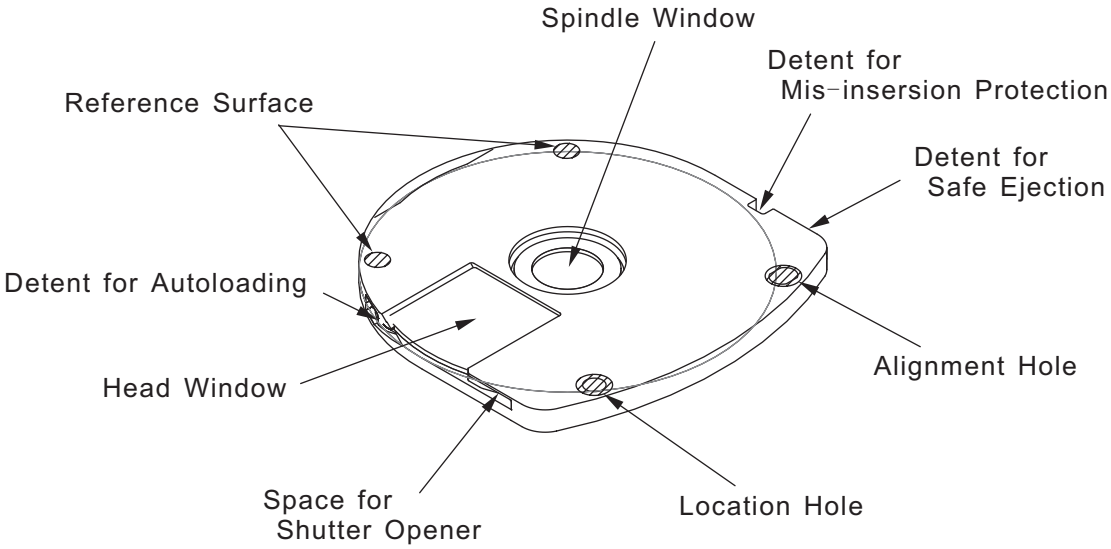

Figure 5 — General view of the case viewed from bottom

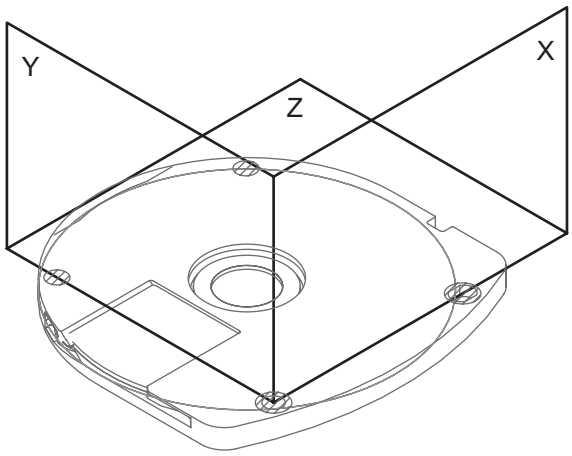

Figure 6 — Reference Planes

© ISO/IEC 2006 – All rights reserved
Copyright International Organization for Standardization
Provided by IHS under license with ISO
No reproduction or networking permitted without license from IHS
Not for Resale

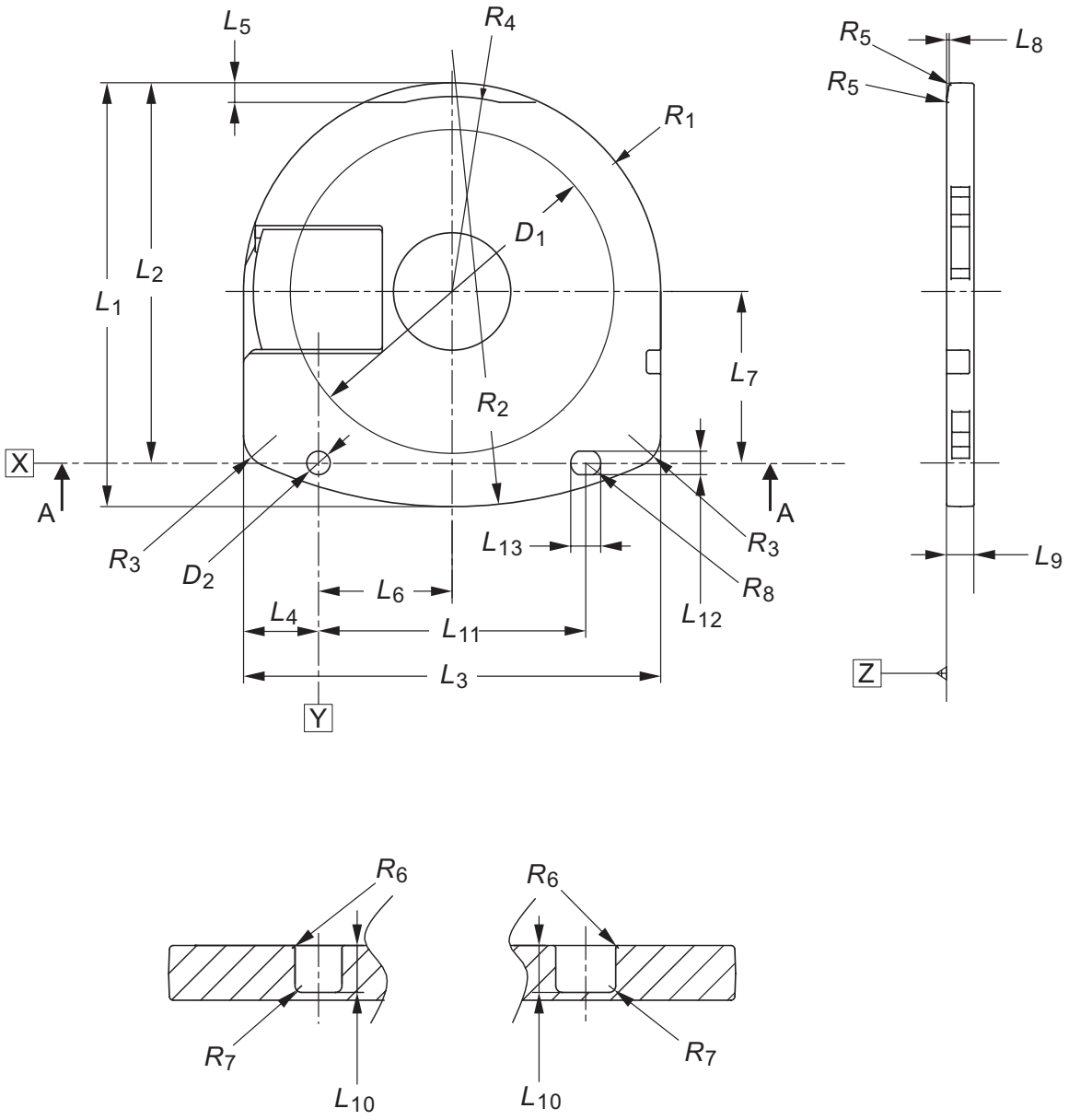

Section A – A

Figure 7 — Overall Dimensions

© ISO/IEC 2006 – All rights reserved
Copyright International Organization for Standardization
Provided by IHS under license with ISO
No reproduction or networking permitted without license from IHS
Not for Resale

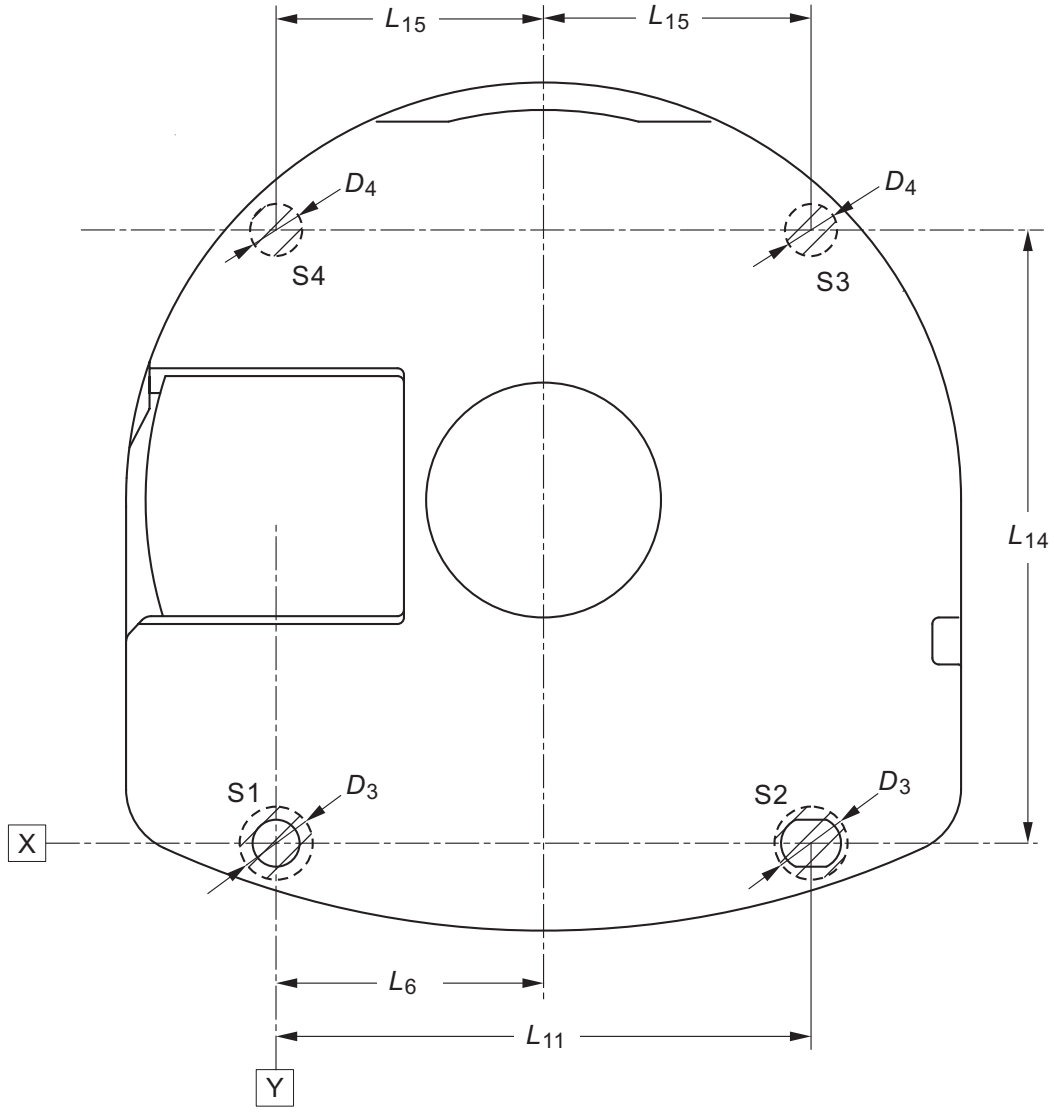

Figure 8 — Reference surfaces

© ISO/IEC 2006 – All rights reserved
Copyright International Organization for Standardization
Provided by IHS under license with ISO
No reproduction or networking permitted without license from IHS
Not for Resale

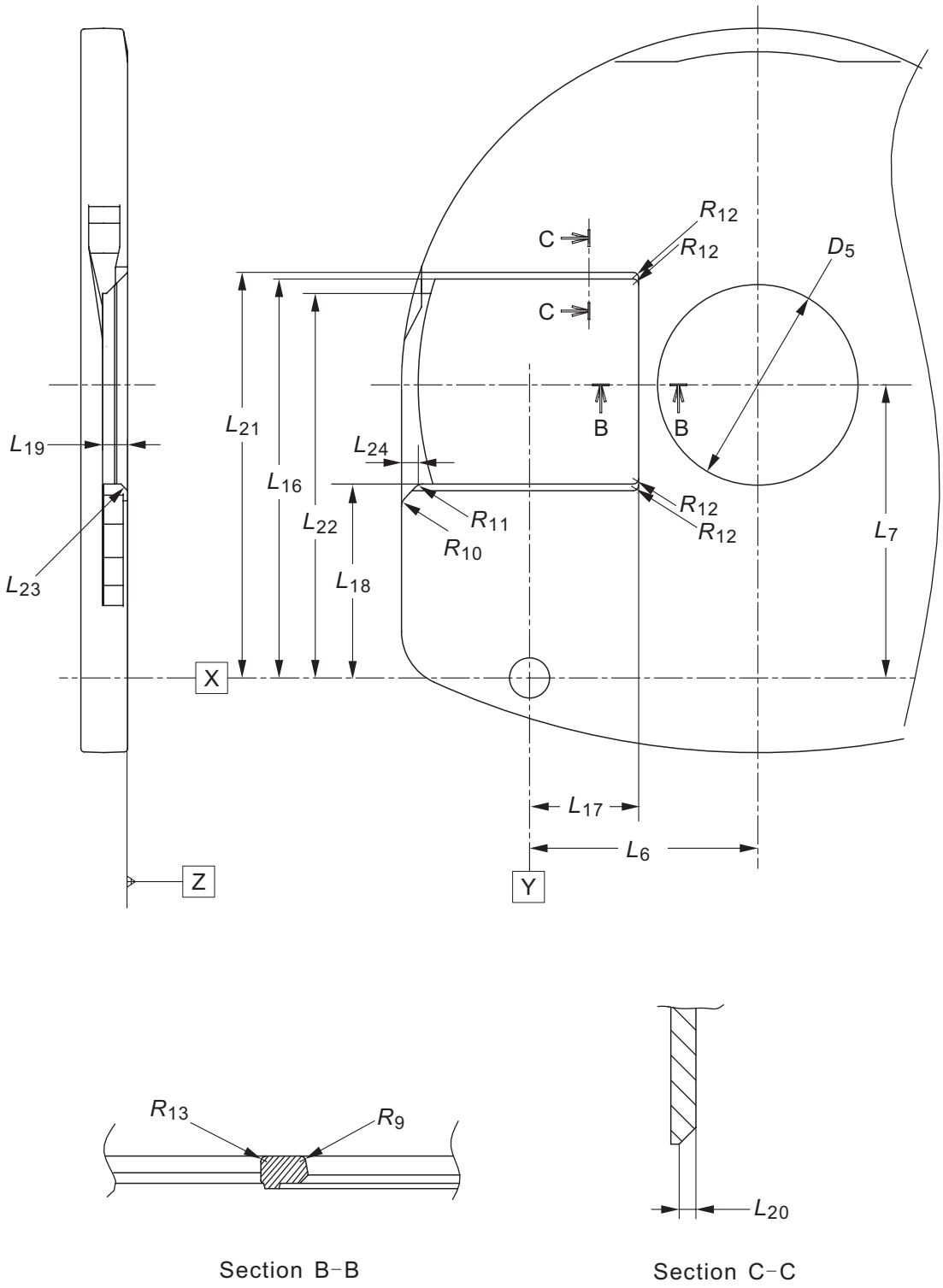

Figure 9 — Spindle window and Head window

--`,,```,,,,````-`-`,,`,,`,`,,`---
Copyright International Organization for Standardization
Provided by IHS under license with ISO
No reproduction or networking permitted without license from IHS
© ISO/IEC 2006 – All rights reserved
Not for Resale

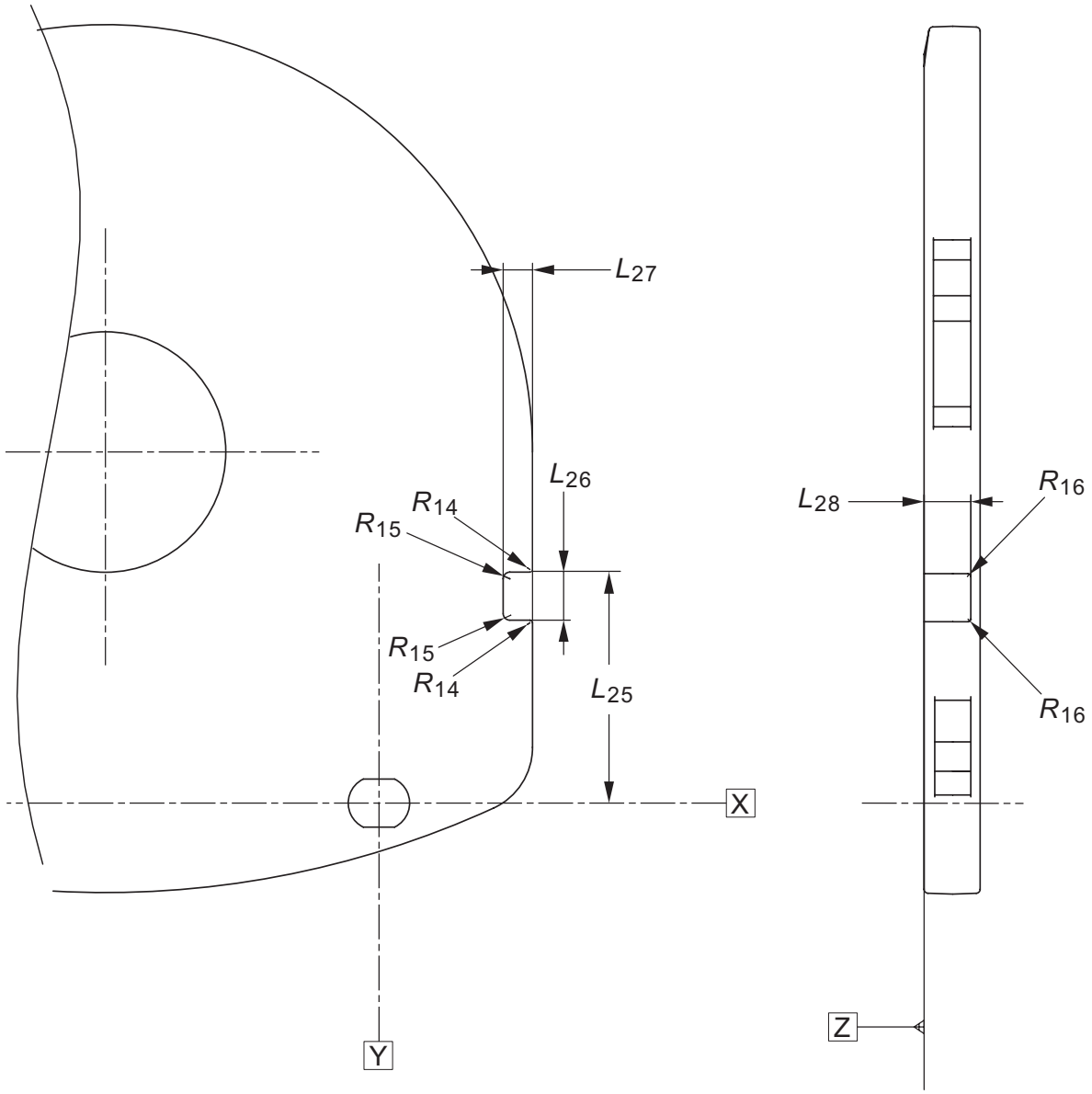

Figure 10 — Detent for mis-insert protection

© ISO/IEC 2006 – All rights reserved
Copyright International Organization for Standardization
Provided by IHS under license with ISO
No reproduction or networking permitted without license from IHS
Not for Resale

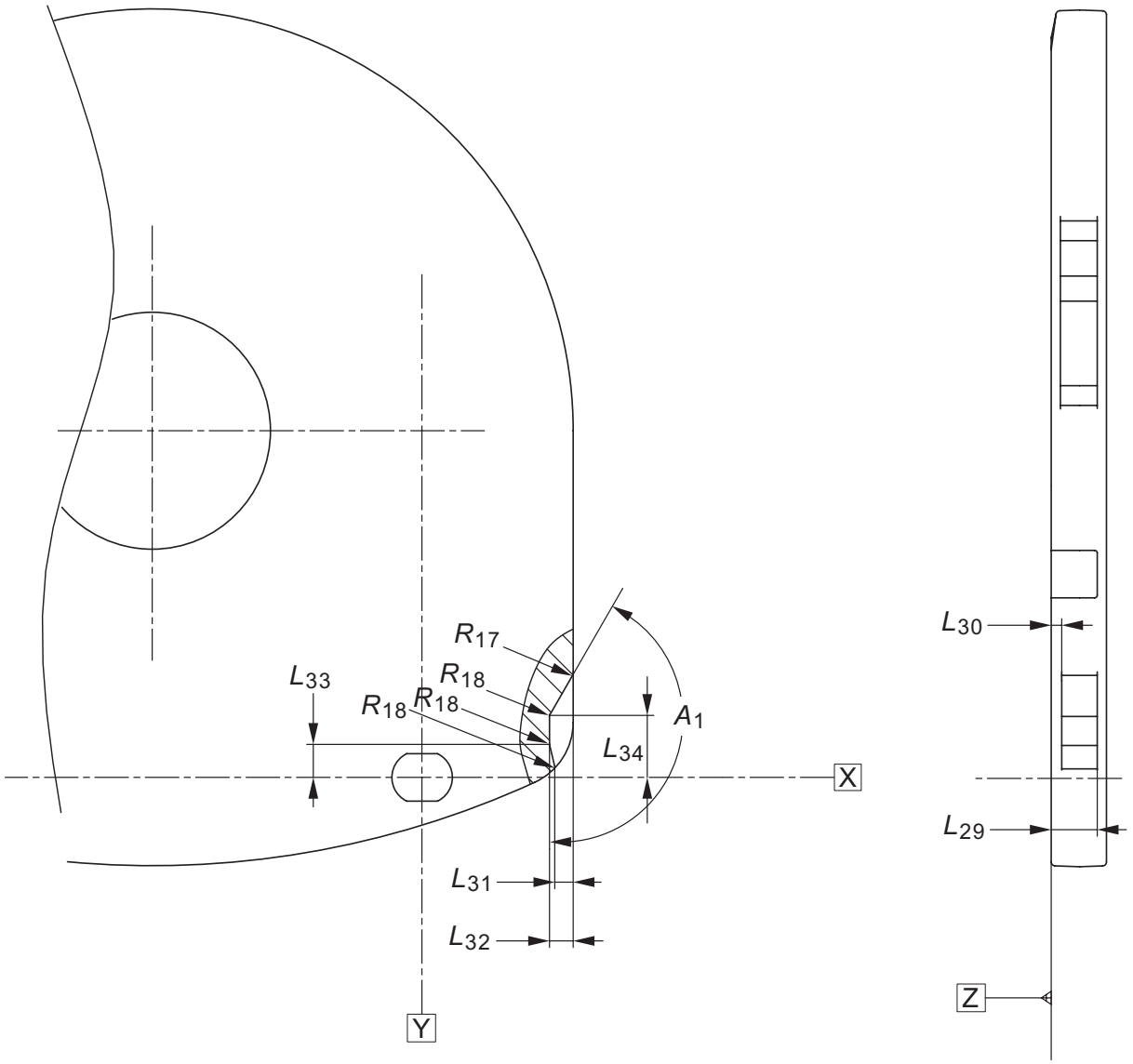

Figure 11 — Detent for safe ejection

© ISO/IEC 2006 – All rights reserved
Copyright International Organization for Standardization
Provided by IHS under license with ISO
No reproduction or networking permitted without license from IHS
Not for Resale

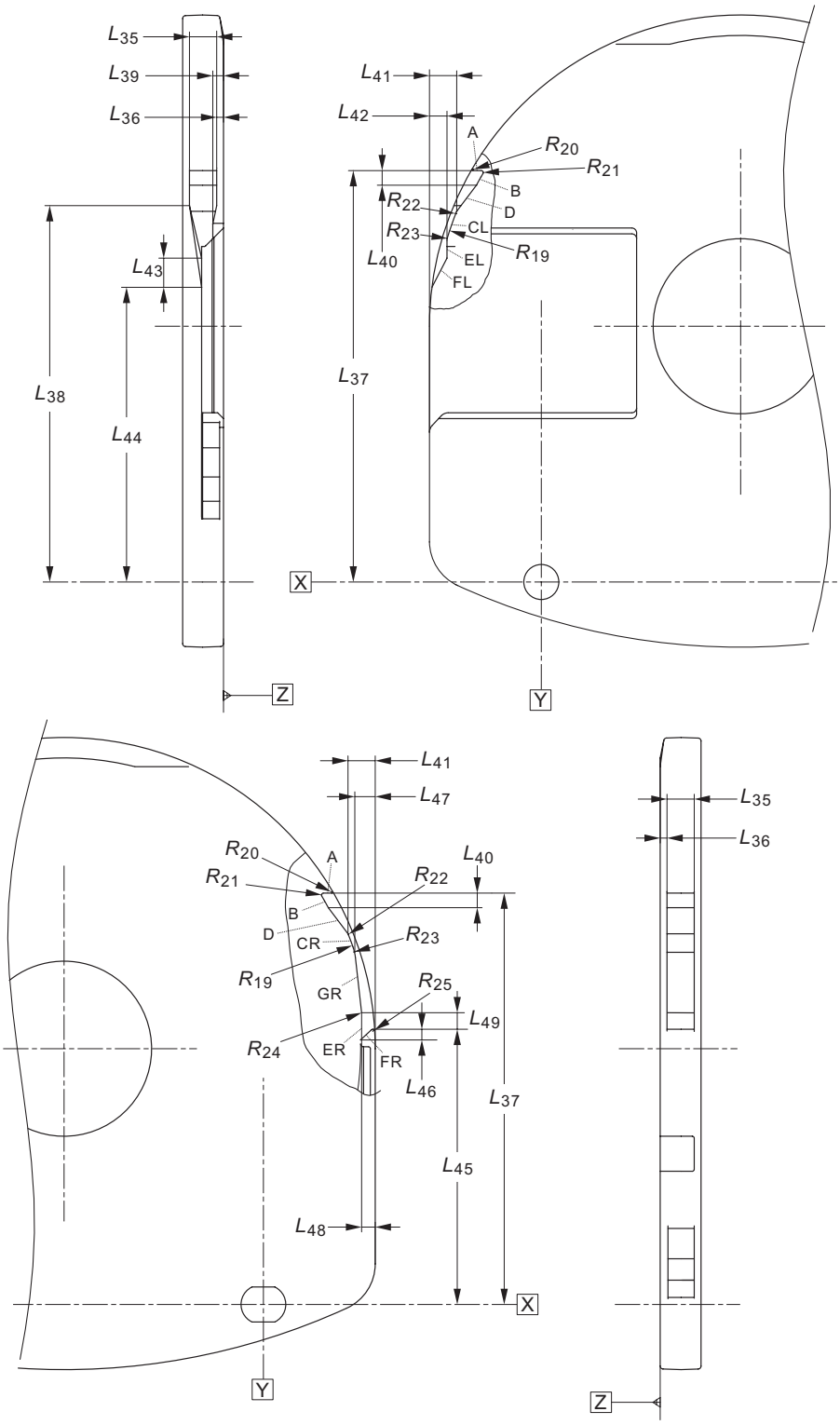

Figure 12 — Detent for autoloading

© ISO/IEC 2006 – All rights reserved
Copyright International Organization for Standardization
Provided by IHS under license with ISO
No reproduction or networking permitted without license from IHS
Not for Resale

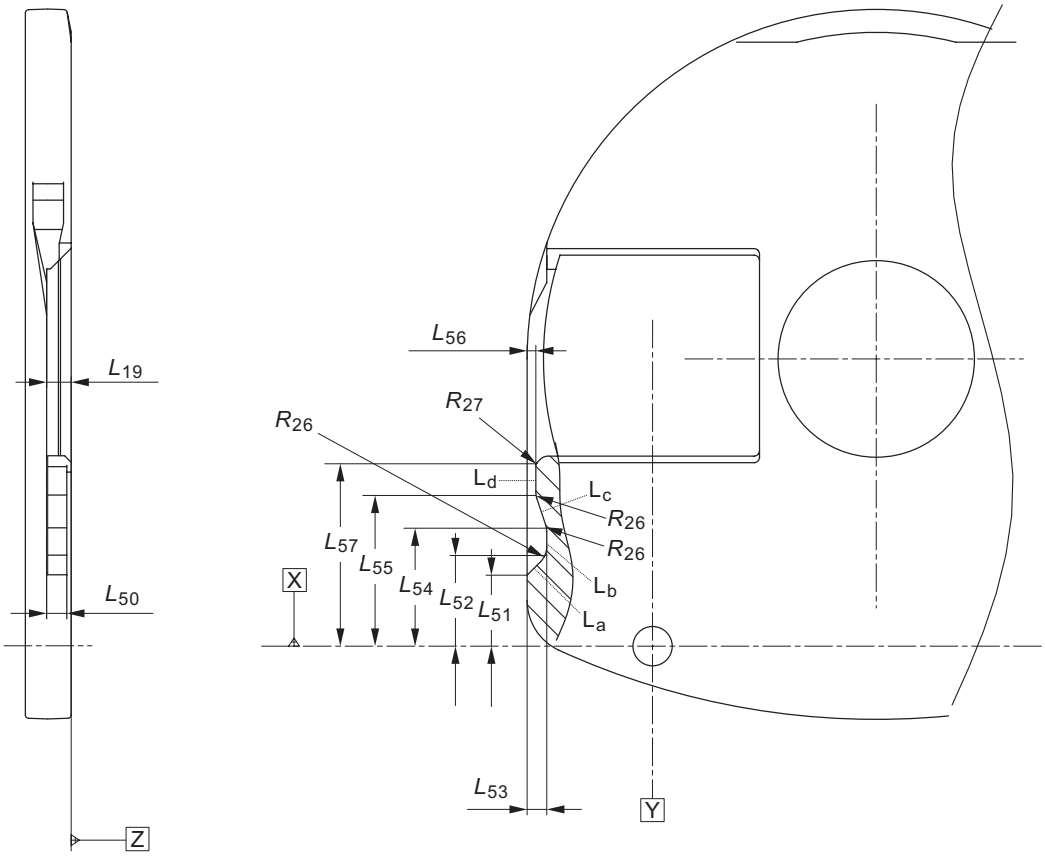

Figure 13 — Space for shutter opener

11 Dimensional characteristics of the disk

Dimensional characteristics of the disk are specified for those parameters deemed mandatory for interchange and compatible use of the disk. Where there is freedom of design, only the functional characteristics of the elements are indicated. The enclosed drawings show the dimensional requirements in summarized form. The different parts of the disk are described from the centre hole to the outside rim. The dimensions are referred to a Reference Plane P. It is the plane on which the bottom surface of the Clamping Zone rests. See 11.4.

© ISO/IEC 2006 – All rights reserved
Copyright International Organization for Standardization
Provided by IHS under license with ISO
No reproduction or networking permitted without license from IHS
Not for Resale

11.1 Overall dimensions

The disk shall have an overall diameter

d_1 = 60,00 mm ± 0,30 mm

The centre hole of a substrate shall have a diameter

$$d_2 = 11{,}025\ \text{mm}\ ^{+0{,}025\ \text{mm}}_{-0{,}025\ \text{mm}}$$

There shall be no burr on the edge of the centre hole of the substrate.

The edge of the centre hole shall be rounded off or chamfered. The rounding radius shall be 0,10 mm max. The chamfer shall extend over a height of 0,10 mm max.

The thickness of the disk in Data Zone, including the spacer and the label, shall be

$$e_1 = 0{,}840\ \text{mm}\ ^{+0{,}090\ \text{mm}}_{-0{,}075\ \text{mm}}$$

11.2 First transition area

In the area defined by d_2 and

d_3 = 11,50 mm max.

the surface of the disk is permitted to be above the Reference Plane P by 0,05 mm max.

11.3 Second transition area

This area shall extend between diameter d_3 and diameter

d_4 = 12,0 mm max.

In this area the disk may have an uneven surface or burrs up to 0,05 mm max. above the Reference Plane P.

11.4 Clamping Zone

This zone shall extend between diameter d_4 and diameter

d_5 = 16,2 mm min.

11.5 Clamping plate

The specifications in this sub-clause are referred to Figure 17.

The inner diameter of the cylindrical part of the clamping plate shall be

d_6 = 11,0 mm min.

The distance to the inner surface of the clamping plate from the Reference Plane P shall be

$$e_2 = 1{,}30\ \text{mm}\ ^{+0{,}08\ \text{mm}}_{-0{,}08\ \text{mm}}$$

© ISO/IEC 2006 – All rights reserved

Copyright International Organization for Standardization
Provided by IHS under license with ISO
No reproduction or networking permitted without license from IHS
Not for Resale

The diameter of the inner top surface shall be

d_7 = 10,5 mm min.

The thickness of the clamping plate shall be

$$e_3 = 0{,}30\ \text{mm}\ {}^{+0{,}03\ \text{mm}}_{-0{,}03\ \text{mm}}$$

The roundness of the corner between the inner top surface and the inner wall of the cylindrical part shall be

r_1 = 0,25 mm max.

The diameter of the centre hole of the Clamping plate shall be

d_8 = 1,50 mm ± 0,10 mm

The magnetic material shall be ISO 16143 X6Cr17 Ferritic stainless steel. Clamping plate shall withstand a clamping force of 5 N.

11.6 Third transition area

This area shall extend between diameter d_5 and diameter

$$d_9 = 16{,}4\ \text{mm}\ {}^{+0{,}1\text{mm}}_{-0{,}1\text{mm}}$$

The bottom surface is permitted to be above the Reference Plane P by 0,05 mm max.

11.7 Fourth transition area

The area shall extend between diameter d_9 and diameter

d_{10} = 17,4 mm ± 0,1 mm

The dimension of the disk cross section in this area shall be designed so that all the specifications concerning the capture cylinder are satisfied. See 14.3.

11.8 Fifth transition area

The area shall extend between diameter d_{10} and diameter

d_{11} = 19,9 mm max.

In this area, the height of the bottom surface of the disk may be higher than that in the area outside diameter d_{11} by 0,01mm max.

11.9 Information Zone

The Information Zone shall extend from the beginning of the Lead-in Zone to diameter d_{13} the value of which is 58,2 mm min. In the Information Zone the thickness of the disk shall be equal to e_1 specified in 11.1.

The nominal height of the information zone L0 shall be;

e_4 = 1,22 mm ± 0,05 mm

© ISO/IEC 2006 – All rights reserved
Copyright International Organization for Standardization
Provided by IHS under license with ISO
No reproduction or networking permitted without license from IHS
Not for Resale

11.9.1 Sub-divisions of the Information Zone

The main parts of the Information Zone are

- the Lead-in Zone
- the Data Zone
- the MI Backup Zone
- the Lead-out Zone

The area extending from d_{11} to diameter 28 mm max. shall be used as follows:

- there shall be the beginning of the Lead-in Zone of both A and B Types
- there shall be the end of the Lead-out Zone on dummy layer of Type A and L1 layer of Type B in OTP mode.

In the first case, the Lead-in Zone shall end at diameter

$$d_{12} = 32{,}0\ \text{mm}\ {}^{+0{,}0\ \text{mm}}_{-0{,}2\ \text{mm}}$$

which is identical to the start diameter of the Data Zone.

In the second case, the Data Zone shall not extend toward the centre of the disk beyond d_{12}. The Lead-out Zone shall start after the Data Zone and end between diameters 28,0 mm max. and d_{11}.

The Data Zone, starting after the Lead-in Zone at diameter d_{12}, shall extend up to the diameter

d_{13} = 56,0 mm max.

Use and structure of the zone between diameters d_{13} and d_{14} is as follows.

On L0 layer of any disk Type the MI Backup Zone shall take over the Data Zone extending to the diameter 56.1mm max. The MI Backup Zone shall continue to the Middle Zone in Type B disk in OTP mode and to the Lead-out Zone in Type A disk and Type B disk in PTP mode. As for the MI Backup Zone, see 26.5.

On L1 layer of Type B disk in PTP mode the Lead-out Zone shall take over the Data Zone. On dummy layer and L1 layer of Type B disk in OTP mode the Middle Zone shall take over the Data Zone.

The Middle Zone and the Lead-out Zone shall extend to the diameter

d_{14} = 58,2 mm min.

Outside the diameter 57,1 mm, the specifications of jitter value, the spacer thickness and variation of I_{14H} level shall be relaxed. See 13.3 and 15.4.1.

11.9.2 Track and pits geometry

In both disk Types, polarity of pits on Layers 0 and 1 is shown schematically below. The track pitch shall be 0,70 µm ± 0,03 µm. The track pitch averaged over the Data Zone shall be 0,70 µm ± 0,01 µm.

© ISO/IEC 2006 – All rights reserved

Copyright International Organization for Standardization
Provided by IHS under license with ISO
No reproduction or networking permitted without license from IHS
Not for Resale

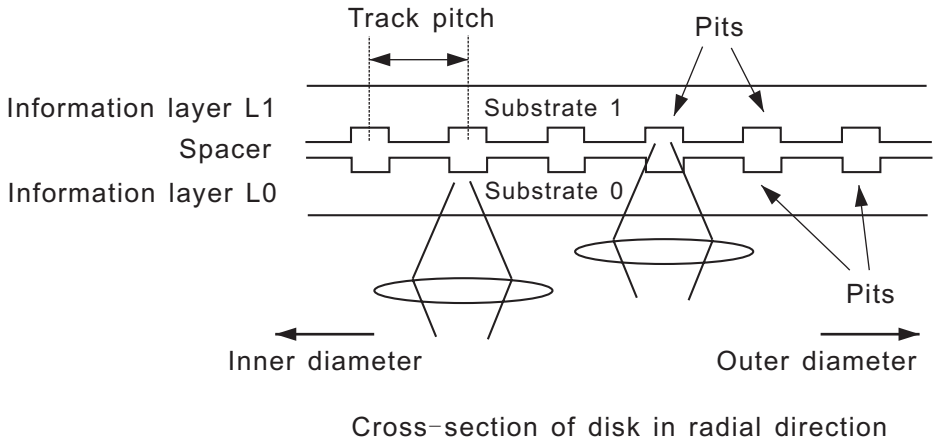

Figure 14 — Pit geometry

11.9.3 Track modes

Tracks can be recorded in two different modes called Parallel Track Path (PTP) and Opposite Track Path (OTP). Figure 15 shows examples of the PTP and OTP modes. In practice, the lengths of the Data Zones of both layers are independent of each other.

Types A shall be recorded in OTP mode only.

Types B may be recorded in either mode.

In PTP mode, tracks are read from the inside diameter of the Information Zone to its outside diameter on both Layer 0 and Layer 1, see Figure 15 (B). On both layers, the track spiral is turning from the inside to the outside.

In OTP mode, the track starts at the inner diameter of the Information Zone on Layer 0 and extends to the outer diameter of that layer and then taken over by the outer diameter of Layer 1 and extends toward the inner diameter of that layer. Thus, there shall be a Middle Zone for layer jumping at the outer diameter on both layers, see Figure 15 (C). The track spiral is turning from the inside to the outside on Layer 0 and in the reverse direction on Layer 1. In case of SL disks, the track polarity of the dummy layer is identical to that of the L1 layer in OTP mode.

In any disk type, the radius of the outer edge measured from the centre of the centre hole shall be 30,00 mm $\pm$ 0,15 mm.

11.9.4 Channel bit length

The Information Zone shall be recorded in CLV mode. The Channel bit length averaged over the Data Zone shall be

138,4 nm ± 1,5 nm for both Type A and Type B

11.10 Rim area

The dimensional tolerances of the rim area shall be specified as follows. See Figure 18.

d_{15} = 59,00 mm min.

d_{16} = 58,00 mm min.

© ISO/IEC 2006 – All rights reserved
Copyright International Organization for Standardization
Provided by IHS under license with ISO
No reproduction or networking permitted without license from IHS
Not for Resale

h_1, h_2 = 0,10 mm max.

c_1, c_2 = 0,20 mm max.

e_7 = 0,40 mm min.

Even in the rim area, the total thickness of the disc shall not exceed e_1. See Figure 18.

11.11 Deflection

The nominal distance of recorded layer L0 from the Reference Plane P shall be 1,22 mm ± 0,05 mm. Deviation of that distance from its nominal value due to deflection shall be;

± 0,20 mm	within that layer
0,18 mm peak-to-peak	within one rotation

11.12 Runout

11.12.1 Axial runout

The residual tracking error below 10 kHz, measured using the Reference Servo for axial tracking, shall be less than 0,23 µm. The measuring filter shall be a Butterworth LPF, f_c (- 3 dB): 10 kHz, slope: - 80 dB/decade.

11.12.2 Radial runout

The radial runout of tracks shall be less than 0,1 mm, peak-to-peak.

The residual tracking error below 1,1 kHz, measured using the Reference Servo for radial tracking, shall be less than 0,022 µm. The measuring filter shall be a Butterworth LPF, f_c (- 3 dB): 1,1 kHz, slope: - 80 dB/decade.

The rms noise value of the residual error signal in the frequency band from 1,1 kHz to 10,0 kHz, measured with an integration time of 20 ms, using the Reference Servo for radial tracking, shall be less than 0,016 µm. The measuring filter shall be a Butterworth BPF, frequency range (- 3 dB): 1,1 kHz, slope: + 80 dB/decade to 10,0 kHz, slope: - 80 dB/decade.

11.13 Label

The label shall be placed on the side of the disk opposite the entrance surface for the information to which the label is related. The thickness of the label, e_5 shall not exceed 40 µm.

12 Mechanical parameters of the disk

12.1 Mass

The total mass of the disk, including the clamping plate and the label if any, shall be in the range 2,8 g to 3,5 g.

12.2 Moment of inertia

The moment of inertia of the disk, relative to its rotation axis, shall not exceed 0,0013 g·m^2.

12.3 Dynamic imbalance

The dynamic imbalance of the disk, relative to its rotation axis, shall not exceed 0,0028 g·m.

© ISO/IEC 2006 – All rights reserved

Copyright International Organization for Standardization
Provided by IHS under license with ISO
No reproduction or networking permitted without license from IHS
Not for Resale

12.4 Sense of rotation

The sense of rotation of the disk shall be counter-clockwise as seen by the optical system.

13 Optical parameters of the disk

13.1 Index of refraction

The index of refraction IR of the transparent substrate shall be $1{,}58^{+0{,}07}_{-0{,}13}$

The index of refraction of the spacer shall be (IR $\pm$ 0,10).

13.2 Thickness of the substrate 0

The thickness of the substrate 0 is specified as a function of its index of refraction.

Figure 19 specifies it for Types A and B.

13.3 Thickness of the spacer

The thickness of the spacer shall be within the following range, independent of the disk type.

36,0 µm ~ 50,0 µm diameter $\leq$ 57,1 mm

36,0 µm ~ 54,0 µm diameter > 57,1 mm

Annex I shows two ways of measuring this thickness. Within one revolution, it shall not vary by more than 8 µm peak-to-peak.

13.4 Angular deviation

The angular deviation is the angle α between a parallel incident beam and the reflected beam. The incident beam shall have a diameter in the range 0,3 mm to 3,0 mm. This angle includes deflection due to any non-parallel condition that exists between the Reference Plane P and the recorded layer. See Figure B.1. It shall meet the following requirements when measured according to Annex B.

In radial direction: $|\alpha|$ = 0,80 ° max.

In tangential direction: $|\alpha|$ = 0,30 ° max.

13.5 Birefringence of the transparent substrate

The birefringence of the transparent substrate shall be 100 nm max. when measured according to Annex C.

13.6 Reflectivity

When measured according to Annex D, the reflectivity of all the recorded layer(s) of any disk Type, shall be 18 % to 30 % (PUH with PBS).

On all over the layers L0 and L1, the maximum reflectivity and the minimum reflectivity shall satisfy the following relationship;

Ratio of reflectivity r_R shall be 0,33 max (with PBS)

© ISO/IEC 2006 – All rights reserved
Copyright International Organization for Standardization
Provided by IHS under license with ISO
No reproduction or networking permitted without license from IHS
Not for Resale

$$r_R = \frac{R_{max} - R_{min}}{R_{max}}$$

where

R_{max}: Maximum reflectivity

R_{min}: Minimum reflectivity

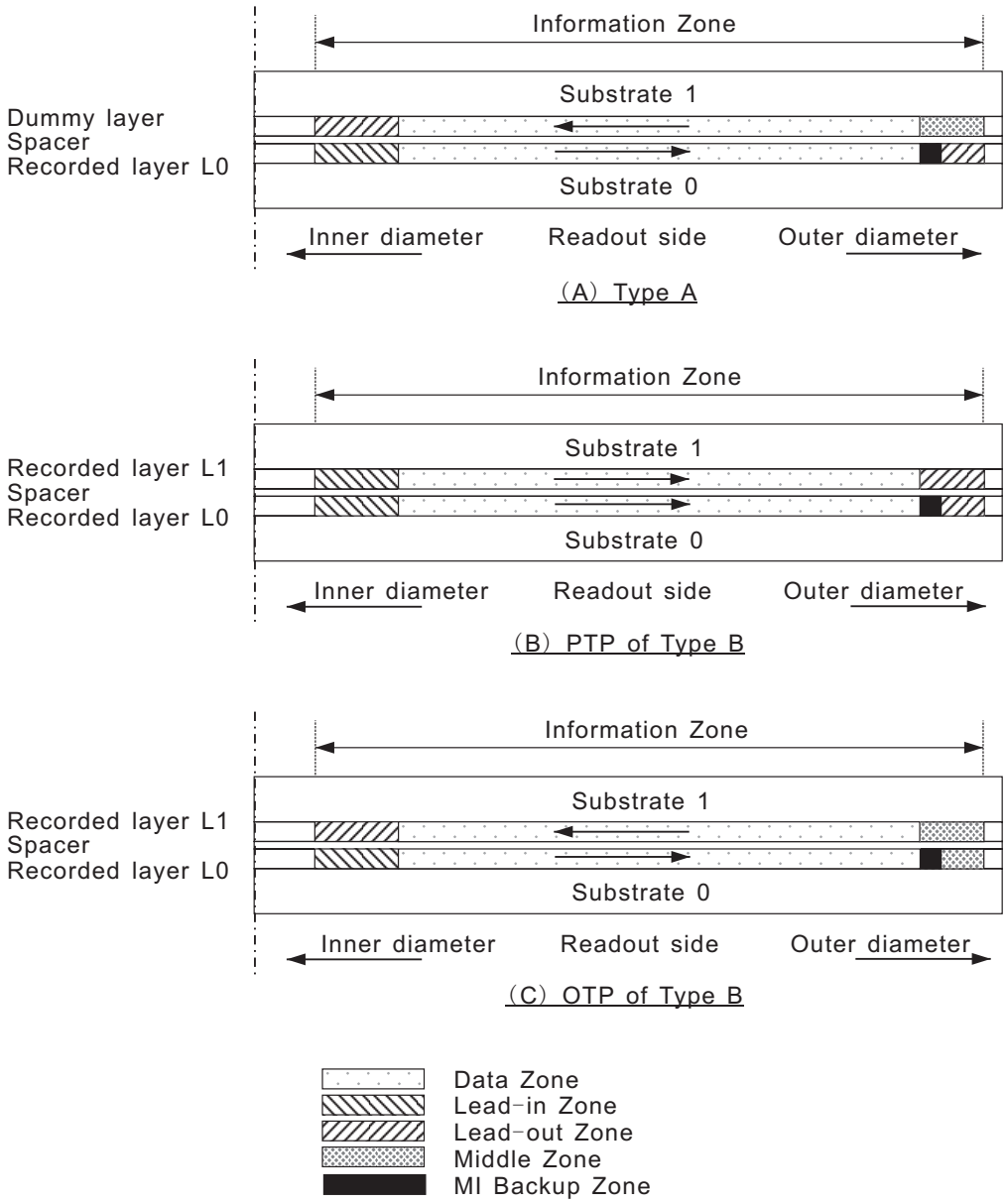

Figure 15 — Examples of track paths for Types A and B

© ISO/IEC 2006 All rights reserved

Copyright International Organization for Standardization
Provided by IHS under license with ISO
No reproduction or networking permitted without license from IHS
Not for Resale

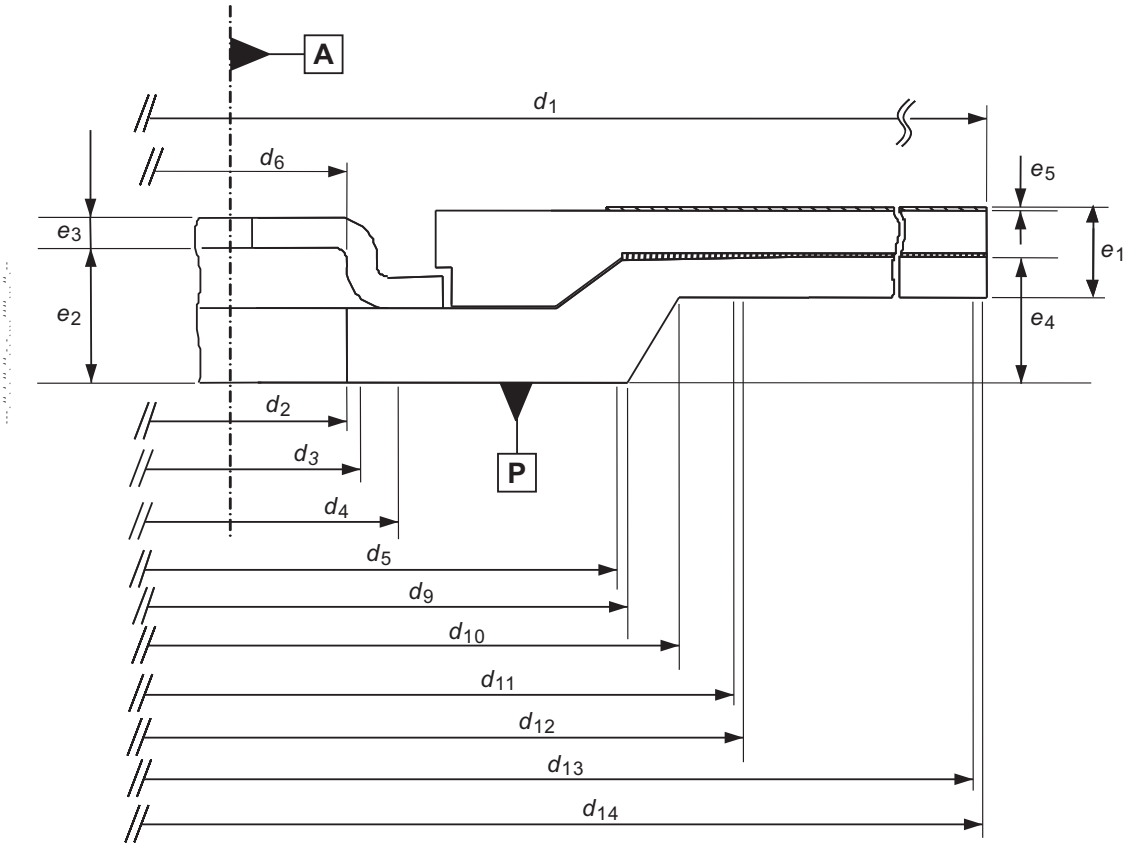

Figure 16 — Areas of the disk

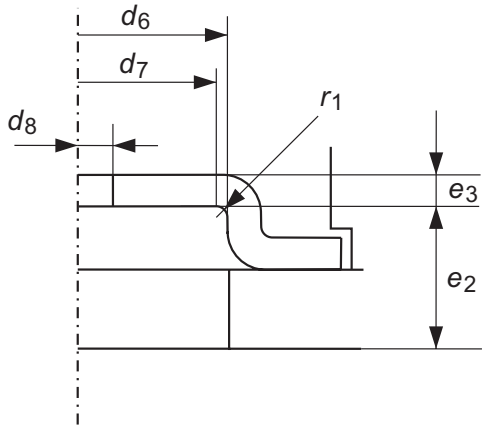

Figure 17 — Clamping plate

© ISO/IEC 2006 – All rights reserved
Copyright International Organization for Standardization
Provided by IHS under license with ISO
No reproduction or networking permitted without license from IHS
Not for Resale

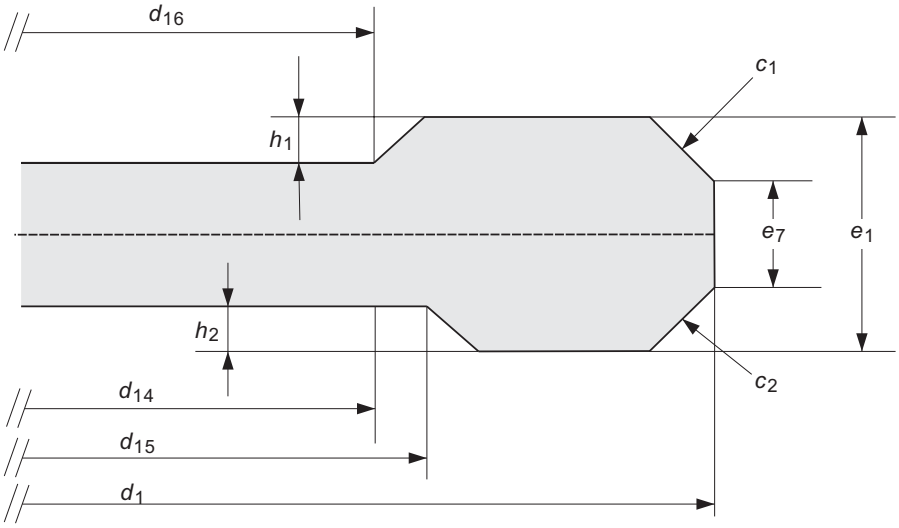

Figure 18 — Rim area

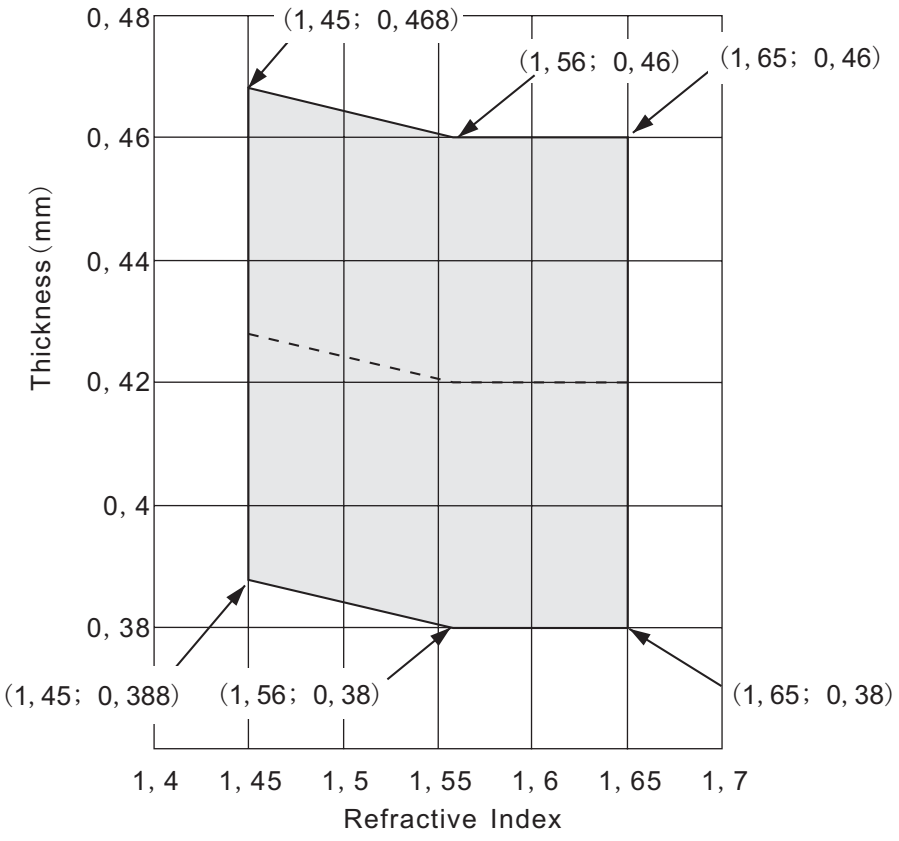

Figure 19 — Thickness of the substrate for Types A and B

© ISO/IEC 2006 – All rights reserved
Copyright International Organization for Standardization
Provided by IHS under license with ISO
No reproduction or networking permitted without license from IHS
Not for Resale

14 Interface between cartridge and drive

14.1 Clamping method

When the cartridge is inserted into the drive, the drive spindle engages the disk. The disk is held against the spindle by an axial clamping force, provided by the magnetizable material in the hub and the magnets in the spindle.

The radial positioning of the disk is provided by the centring of the axis of the spindle in the centre hole of the hub. A hat-shaped turntable of the spindle shall support the disk in its clamping zone, determining the axial position of the disk in the case.

14.2 Clamping force

The clamping force exerted by the spindle on the hub shall not exceed 5,0 N.

14.3 Capture cylinder

The specifications in this sub-clause are referred to Figure 20.

The capture cylinder is defined as the volume in which the spindle can expect the centre of the hole in the hub to be, just prior to capture, and with the cartridge constrained as in 10.4.3. The centre of the hole is defined as the point on axis A at the Reference Plane P. See 11.1 and Figure 16.

The size of the cylinder defines the permissible play of the disk inside its cavity in the case. The cylinder is referred to perfectly located and perfectly sized alignment and location pins in the drive; it includes the tolerances of those dimensions of the case and the disk which are between the two pins mentioned and the centre of the hub. The bottom of the cylinder is parallel to plane Z, and shall be located a distance

L_{58} = 0,05 mm min.

above plane Z. The top of the cylinder is located a distance

L_{59} = 1,90 mm max.

above plane Z. The radius of the cylinder shall be

R_{28} = 0,8 mm max.

and its centre shall be given by the nominal values of L_6 and L_7 in the drive.

14.4 Disk position in operating condition

The specifications in this sub-clause are referred to Figure 20.

When the disk is in the operating condition within the drive, the position of the Reference Plane P of the disk shall be

L_{60} = 0,90 mm ± 0,13 mm

above plane Z of the case,

with its tilt angle of

A_2 = 0,3 ° max.

and the axis of rotation shall be within a circle with a radius

R_{29} = 0,15 mm max.

© ISO/IEC 2006 – All rights reserved
Copyright International Organization for Standardization
Provided by IHS under license with ISO
No reproduction or networking permitted without license from IHS
Not for Resale

and a centre given by the nominal values of L_6 and L_7. The disk shall freely rotate in the operating condition at the scanning velocity.

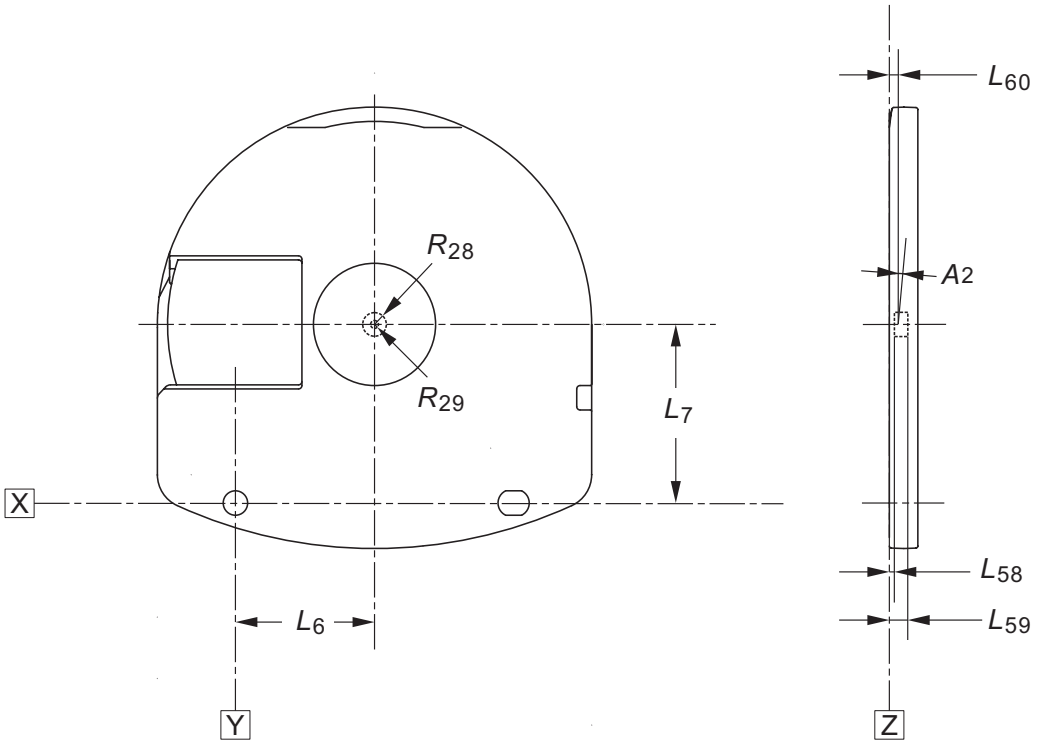

Figure 20 — Capture cylinder and disk position in operating condition

© ISO/IEC 2006 – All rights reserved

Copyright International Organization for Standardization
Provided by IHS under license with ISO
No reproduction or networking permitted without license from IHS
Not for Resale

Section 3 — Operational Signals

15 High frequency signals

The HF signal is obtained by summing the currents of the four elements of the photo detector. These currents are modulated by diffraction of the light beam at the pits representing the information on the recorded layer. Measurements, except for jitter, are executed to HF before equalizing.

15.1 Modulated amplitude

The modulated amplitude I_{14} is the peak-to-peak value generated by the largest pit or land length. See Figure 23.

The peak value I_{14H} shall be the peak value corresponding to the HF signal before high-pass filtering.

The peak-to-peak value of the shortest pit or land length shall be I_3.

The 0 Level is the signal level obtained from the measuring device when no disk is inserted.

These parameters shall meet the following requirements.

$$0{,}48 \leq \frac{I_{14}}{I_{14H}} \leq 0{,}83$$

$$\frac{I_3}{I_{14}} \leq 0{,}15$$

I_{14H} is the signal level retrieved from the longest recorded pits. This can vary according to, for example, inhomogeneity of the reflectivity and / or birefringence. The maximum and minimum values of I_{14H} are denoted as I_{14Hmax} and I_{14Hmin} respectively.

The maximum value of fluctuation ratio shall be as specified in Table 1.

as:

$$\frac{I_{14Hmax} - I_{14Hmin}}{I_{14Hmax}}$$

Table 1 — Maximum value of fluctuation ratio

	diameter ≤ 57,1 mm		diameter > 57,1 mm
	Within one disk	Within one revolution	Within one revolution
PUH with PBS	0,33	0,15	0,20

15.2 Signal asymmetry

The signal asymmetry shall meet the following requirement, see Figure 23.

$$-0{,}05 \leq \frac{(I_{14H} + I_{14L})/2 - (I_{3H} + I_{3L})/2}{I_{14}} \leq 0{,}15$$

© ISO/IEC 2006 – All rights reserved
Copyright International Organization for Standardization
Provided by IHS under license with ISO
No reproduction or networking permitted without license from IHS
Not for Resale

where

$(I_{14H} + I_{14L}) / 2$ is the centre level of I_{14}

$(I_{3H} + I_{3L}) / 2$ is the centre level of I_3.

15.3 Cross-track signal

The cross-track signal is derived from the HF signal, which is used for track counting during seeking process or track jumping as it carries the information on the polarity of the push-pull tracking signal. The Cross Tracking Signal (CTS) is defined as the difference between HF signal amplitude on the tracks (I_a) and between the tracks (I_b) normalized by I_a. The radial tracking servo shall be off for measurement of CTS. See Figure 21.

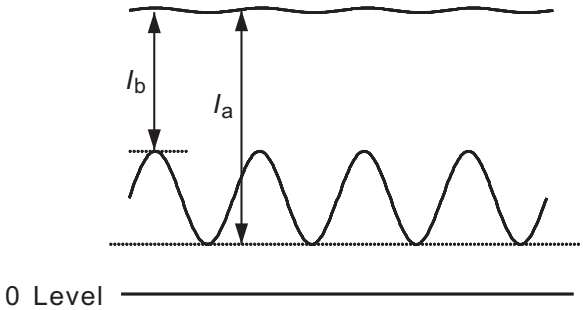

HF signal with the radial tracking servo off

I_a: HF signal amplitude on the track
I_b: HF signal amplitude between the tracks

$$\Longrightarrow CTS = \frac{I_a - I_b}{I_a}$$

Figure 21 — Definition of the Cross Tracking signals

The CTS signal (CTS) shall satisfy the following condition;

$CTS \geq 0{,}28$

15.4 Quality of signals

15.4.1 Jitter

In the Information Zone (see, Clause 26), jitter is defined as the standard deviation σ of the time variation of the digitized data passed through the equalizer. As shown in Annex F, the jitter of the leading and trailing edges is measured to the PLL clock and normalized by the Channel bit clock period. In the layers L0 and L1, Jitter shall be less than 8,0 % for the diameter equal or less than 57,1 mm and less than 9,0 % for the diameter greater than 57,1 mm. In the dummy layer, Jitter shall be less than 9,0 %.

© ISO/IEC 2006 All rights reserved
Copyright International Organization for Standardization
Provided by IHS under license with ISO
No reproduction or networking permitted without license from IHS
Not for Resale

15.4.2 Random errors

A row of an ECC Block (see Clause 20) that has at least 1 byte in error constitutes a PI error. In any 8 consecutive ECC Blocks the total number of PI errors before correction shall not exceed 280.

15.4.3 Defects

Defects are air bubbles and black spots. Their diameter shall meet the following requirements:

- for air bubbles it shall not exceed 100 µm,
- for black spots causing birefringence it shall not exceed 200 µm, and
- for black spots not causing birefringence it shall not exceed 300 µm.

In addition, over a distance of 80 mm in scanning direction of tracks, the following requirements shall be met:

- the total length of defects larger than 30 µm shall not exceed 300 µm, and
- there shall be at most 6 such defects.

16 Servo signals

The output currents of the 4 quadrants of the split photo detector shown in Figure 24 are identified by I_a, I_b, I_c and I_d.

16.1 Push-pull signal

The push-pull signal carries information on how the focused laser spot is running off from the track centre. The push-pull signal I_{pp} is defined as a difference between two photocurrents I_1 and I_2, each of which comes from the detector arranged symmetrically with respect to the scanning direction of the focused laser spot. This means $I_{pp} = I_1 - I_2$, where $I_1 = (I_a+I_b)$ and $I_2 = (I_c+I_d)$. See Figure 24. The photocurrents are converted to voltage through trans-impedance amplifiers and low-pass filtered with a cut off frequency of 30 kHz. I_{pp} shall be normalized by I_{14H} to obtain the normalized push-pull signal PP_N. Practically, as the push-pull signal has more or less d.c. offsets, the value I_{pp} shall also be averaged in measurement. See Figure 22.

- The normalized push-pull signal PP_N shall satisfy the following condition;

$$0{,}08 \leq PP_N \leq 0{,}16$$

- The maximum variation of the PP_N signal within each recorded layer shall satisfy;

$$\frac{PP_{Nmax} - PP_{Nmin}}{PP_{Nmax} + PP_{Nmin}} \leq 0{,}25$$

© ISO/IEC 2006 – All rights reserved
Copyright International Organization for Standardization
Provided by IHS under license with ISO
No reproduction or networking permitted without license from IHS
Not for Resale

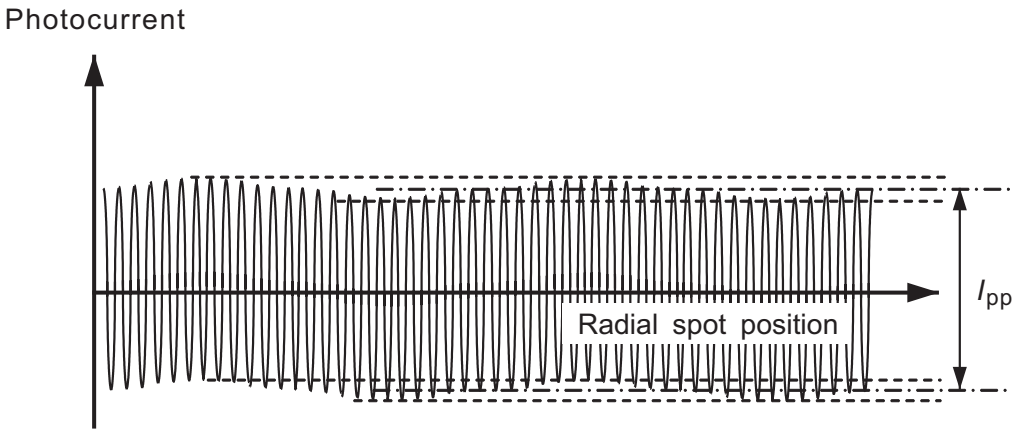

Figure 22 — The push-pull signal versus radial spot position

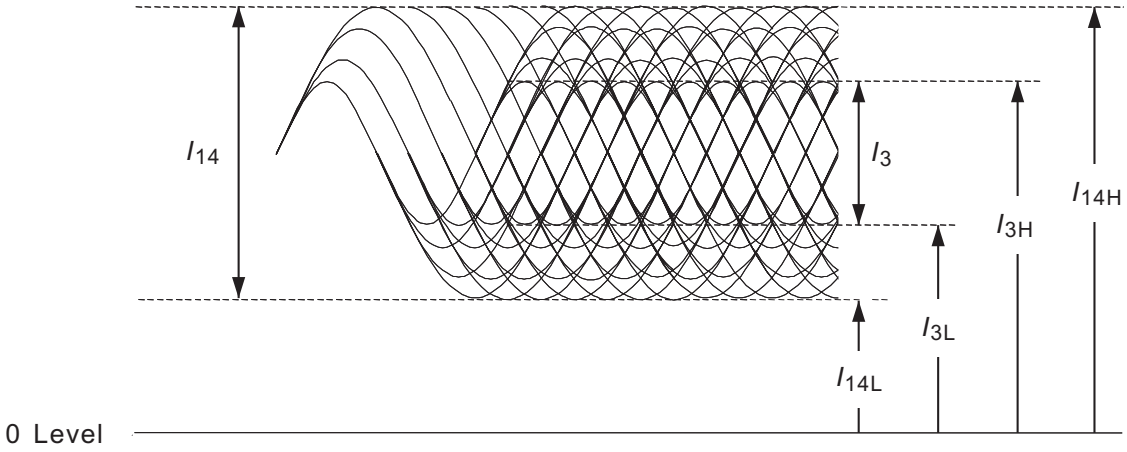

Figure 23 — Modulated amplitude

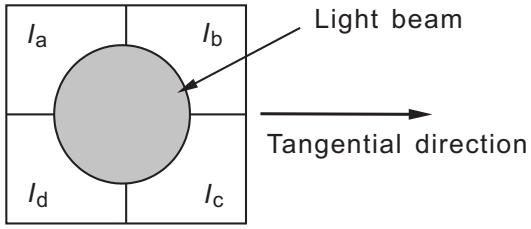

Figure 24 — Quadrant photo detector

--`,,```,,,,````-`-`,,`,,`,`,,`---

© ISO/IEC 2006 – All rights reserved
Copyright International Organization for Standardization
Provided by IHS under license with ISO
No reproduction or networking permitted without license from IHS
Not for Resale

Section 4 — Data Format

17 Data Format General

The data received from the host, called Main Data, is formatted in a number of steps before being recorded on the disk. It is transformed successively into

- a Data Frame,
- a Scrambled Frame,
- an ECC Block,
- a Recording Frame, and
- a Physical Sector.

These steps are specified in the following clauses.

18 Data Frames

A Data Frame shall consist of 2 064 bytes arranged in an array of 12 rows each containing 172 bytes (Figure 25). The first row shall start with three fields, called Identification Data (ID), ID Error Detection Code (IED), Copyright Management Information (CPR_MAI) followed by 160 Main Data bytes. The next 10 rows shall each contain 172 Main Data bytes, and the last row shall contain 168 Main Data bytes followed by four bytes for recording an Error Detection Code (EDC). The 2 048 Main Data bytes are identified as D_0 to $D_{2\,047}$.

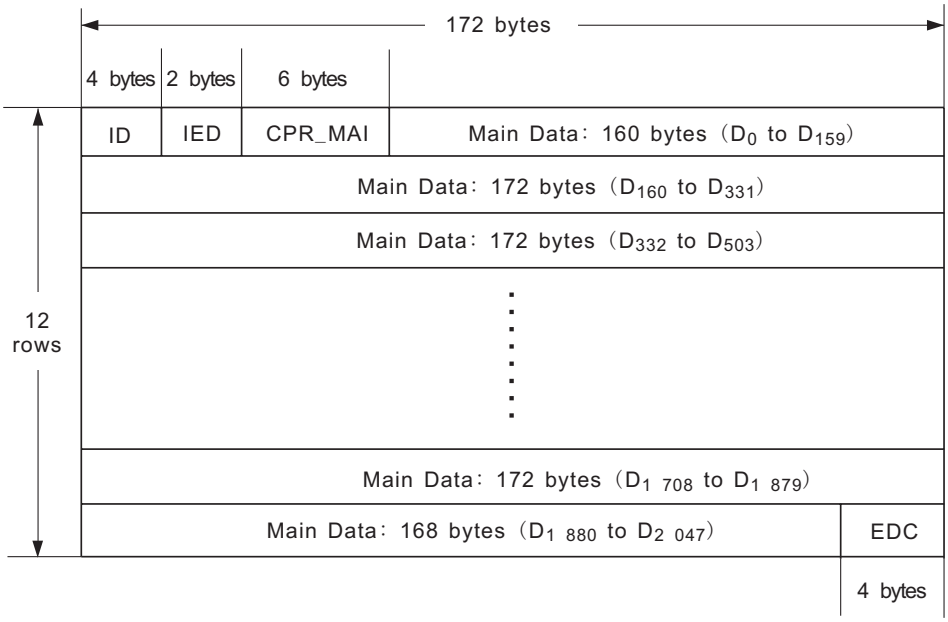

Figure 25 — Data Frame

--`,,```,,,,````-`-`,,`,,`,`,,`---
© ISO/IEC 2006 – All rights reserved
Copyright International Organization for Standardization
Provided by IHS under license with ISO
No reproduction or networking permitted without license from IHS
Not for Resale

18.1 Identification Data

This field shall consist of four bytes the bits of which are numbered consecutively from b_0 (lsb) to b_{31} (msb). See Figure 26.

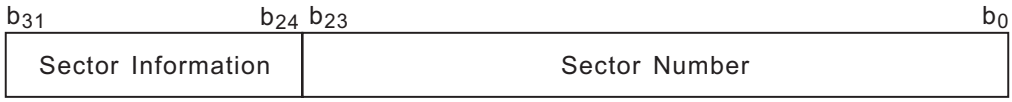

Figure 26 — Identification Data (ID)

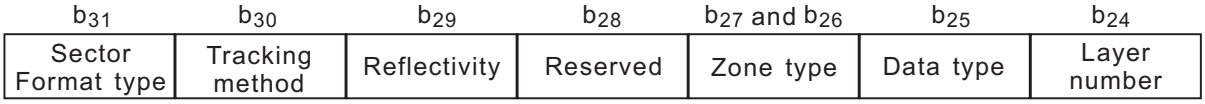

Figure 27 — Sector Information of the Identification Data (ID)

The least significant three bytes, bits b_0 to b_{23}, shall specify the sector number in binary notation. The sector number of the first sector of an ECC Block of 16 sectors shall be a multiple of 16.

The bits of the most significant byte, the Sector Information, shall be set as follows.

Bit b_{24} shall be set to

ZERO on Layer 0 of DL disks (and SL disks)

ONE on Layer 1 of DL disks (and on Dummy layer of SL disks)

Bit b_{25} shall be set to ZERO, indicating read-only data

Bits b_{26} and b_{27} shall be set to

ZERO ZERO in the Data Zone

ZERO ONE in the Lead-in Zone

ONE ZERO in the Lead-out Zone

ONE ONE in the Middle Zone

Bit b_{28} shall be set to ZERO

Bit b_{29} shall be set to

ZERO if the reflectivity is greater than 40 % with PBS PUH

ONE if the reflectivity is 40 % maximum with PBS PUH

Bit b_{30} shall be set to ZERO, indicating pit tracking

Bit b_{31} shall be set to ZERO, indicating the CLV format for read-only disks

Other settings are prohibited in this International Standard.

© ISO/IEC 2006 – All rights reserved

Copyright International Organization for Standardization
Provided by IHS under license with ISO
No reproduction or networking permitted without license from IHS
Not for Resale

18.2 ID Error Detection Code

When identifying all bytes of the array shown in Figure 25 as $C_{i,j}$ for i = 0 to 11 and j = 0 to171, the bytes of IED are represented by $C_{0,j}$ for j = 4 to 5. Their setting is obtained as follows.

$$\mathrm{IED}(x) = \sum_{j=4}^{5} \mathrm{C}_{0,j}\ x^{5-j} = \mathrm{I}(x)\ x^2 \bmod \mathrm{G_E}(x)$$

where

$$\mathrm{I}(x) = \sum_{j=0}^{3} \mathrm{C}_{0,j}\ x^{3-j}$$

$$\mathrm{G_E}(x) = \prod_{k=0}^{1} (x + \alpha^k)$$

α is the primitive root of the primitive polynomial $\mathrm{P}(x) = x^8 + x^4 + x^3 + x^2 + 1$

18.3 Copyright Management Information

This field shall consist of 6 bytes and may contain copyright management information. An agreement between the interchange parties is required to determine the format and the contents of these bytes, else these bytes shall be set to ZEROs.

18.4 Error Detection Code

This 4-byte field shall contain an Error Detection Code computed over the preceding 2 060 bytes of the Data Frame. Considering the Data Frame as a single bit field starting with the most significant bit of the first byte of the ID field and ending with the least significant bit of the EDC field, then this msb will be $b_{16\,511}$ and the lsb will be b_0. Each bit b_i of the EDC is as follows for i = 31 to 0:

$$\mathrm{EDC}(x) = \sum_{i=31}^{0} \mathrm{b}_i\ x^i = \mathrm{I}(x) \bmod \mathrm{G}(x)$$

where

$$\mathrm{I}(x) = \sum_{i=16511}^{32} \mathrm{b}_i\ x^i$$

$$\mathrm{G}(x) = x^{32} + x^{31} + x^4 + 1$$

19 Scrambled Frames

The 2 048 Main Data bytes shall be scrambled by means of the circuit shown in Figure 28 which shall consist of a feedback bit shift register in which bits r_7 (msb) to r_0 (lsb) represent a scrambling byte at each 8-bit shift. At the beginning of the scrambling procedure of a Data Frame, positions r_{14} to r_0 shall be pre-set to the value(s) specified in Table 2. The same pre-set value shall be used for 16 consecutive Data Frames. After 16 groups of 16 Data Frames, the sequence is repeated. The initial pre-set number is equal to the value represented by bits b_7 (msb) to bit b_4 (lsb) of the ID field of the Data Frame. Table 2 specifies the initial pre-set value of the shift register corresponding to the 16 initial pre-set numbers.

--`,,```,,,,````-`-`,,`,,`,`,,`---

© ISO/IEC 2006 – All rights reserved
Copyright International Organization for Standardization
Provided by IHS under license with ISO
No reproduction or networking permitted without license from IHS
Not for Resale

Table 2 — Initial values of the shift register

Initial pre-set number	Initial pre-set value	Initial pre-set number	Initial pre-set value
(0)	(0001)	(8)	(0010)
(1)	(5500)	(9)	(5000)
(2)	(0002)	(A)	(0020)
(3)	(2A00)	(B)	(2001)
(4)	(0004)	(C)	(0040)
(5)	(5400)	(D)	(4002)
(6)	(0008)	(E)	(0080)
(7)	(2800)	(F)	(0005)

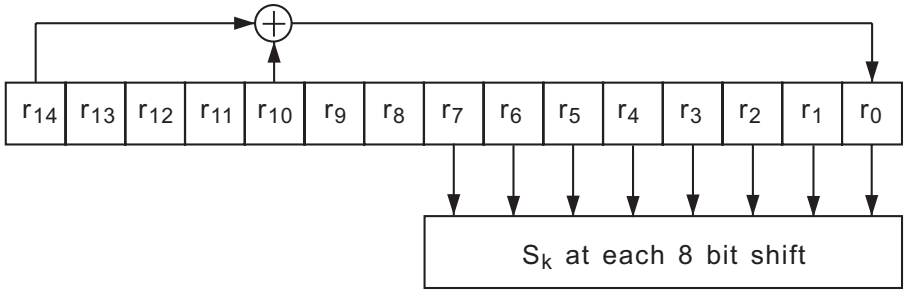

Figure 28 — Feedback shift register

The part of the initial value of r_7 to r_0 is taken out as scrambling byte S_0. After that, 8-bit shift is repeated 2 047 times and the following 2 047 bytes shall be taken from r_7 to r_0 as scrambling bytes S_1 to $S_{2\,047}$. The Main Data bytes D_k of the Data Frame become scrambled bytes D'_k where

$D'_k = D_k \oplus S_k$ for k = 0 to 2 047

$\oplus$ stands for Exclusive OR

20 ECC Blocks

An ECC Block is formed by arranging 16 consecutive Scrambled Frames in an array of 192 rows of 172 bytes each (Figure 29). To each of the 172 columns, 16 bytes of Parity of Outer Code are added, then, to each of the resulting 208 rows, 10 byte of Parity of Inner Code are added. Thus a complete ECC Block comprises 208 rows of 182 bytes each. The bytes of this array are identified as $B_{i,j}$ as follows, where i is the row number and j the column number.

$B_{i,j}$ for i = 0 to 191 and j = 0 to 171 are bytes from the Scrambled Frames

$B_{i,j}$ for i = 192 to 207 and j = 0 to 171 are bytes of the Parity of Outer Code

$B_{i,j}$ for i = 0 to 207 and j = 172 to 181 are bytes of the Parity of Inner Code

--`,,```,,,,````-`-`,,`,,`,`,,`---
© ISO/IEC 2006 – All rights reserved
Copyright International Organization for Standardization
Provided by IHS under license with ISO
No reproduction or networking permitted without license from IHS
Not for Resale

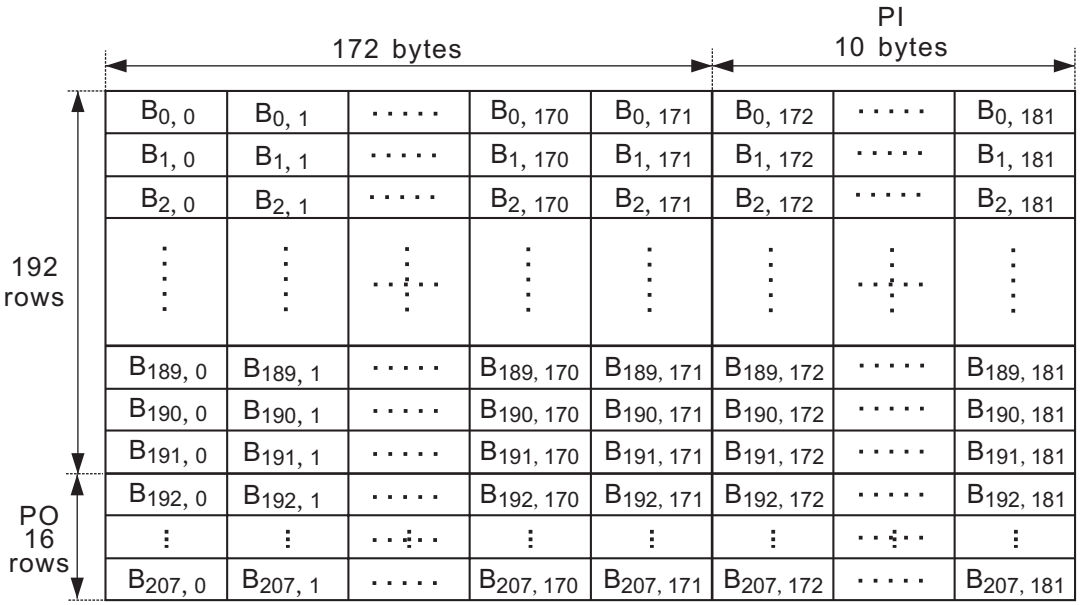

Figure 29 — ECC Block

The PO and PI bytes shall be obtained as follows.

In each of columns j = 0 to 171, the 16 PO bytes are defined by the remainder polynomial $R_j(x)$ to form the outer code RS (208,192,17).

$$R_j(x) = \sum_{i=192}^{207} B_{i,j}\ x^{207-i} = I_j(x)\ x^{16} \bmod G_{PO}(x)$$

where

$$I_j(x) = \sum_{i=0}^{191} B_{i,j}\ x^{191-i}$$

$$G_{PO}(x) = \prod_{k=0}^{15} (x + \alpha^k)$$

In each of rows i = 0 to 207, the 10 PI bytes are defined by the remainder polynomial $R_i(x)$ to form the inner code RS (182,172,11).

$$R_i(x) = \sum_{j=172}^{181} B_{i,j}\ x^{181-j} = I_i(x)\ x^{10} \bmod G_{PI}(x)$$

Copyright International Organization for Standardization
Provided by IHS under license with ISO
No reproduction or networking permitted without license from IHS
© ISO/IEC 2006 – All rights reserved
Not for Resale

where

$$I_i(x) = \sum_{j=0}^{171} B_{i,j}\ x^{171-j}$$

$$G_{PI}(x) = \prod_{k=0}^{9} (x + \alpha^k)$$

α is the primitive root of the primitive polynomial $P(x) = x^8 + x^4 + x^3 + x^2 + 1$

21 Recording Frames

Sixteen Recording Frames shall be obtained by interleaving one of the 16 PO rows at a time after every 12 rows of an ECC Block (Figure 30). This is achieved by re-locating the bytes $B_{i,j}$ of the ECC Block as $B_{m,n}$ for

$m = i + \text{int}[i / 12]$ and $n = j$ for $i \leq 191$

$m = 13\ (i - 191) - 1$ and $n = j$ for $i \geq 192$

where int[x] represents the largest integer not greater than x.

Thus the 37 856 bytes of an ECC Block are re-arranged into 16 Recording Frames of 2 366 bytes. Each Recording Frame consists of an array of 13 rows of 182 bytes.

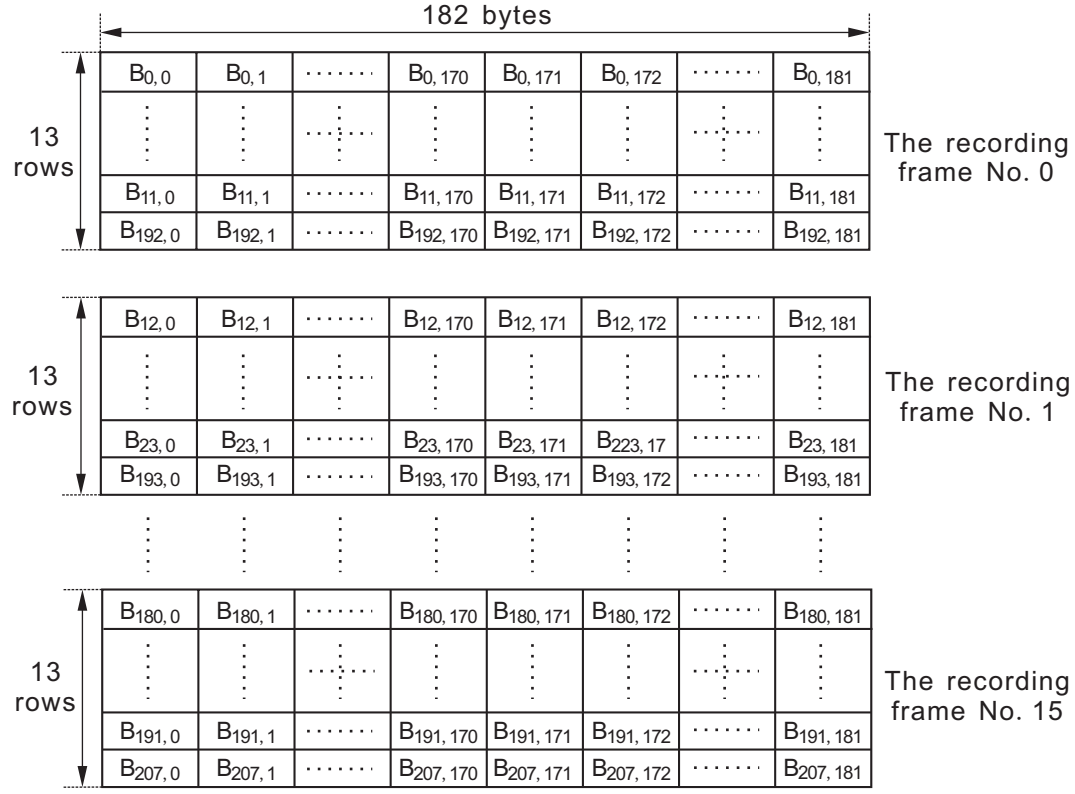

Figure 30 — Recording Frames obtained from an ECC Block

© ISO/IEC 2006 All rights reserved

Copyright International Organization for Standardization
Provided by IHS under license with ISO
No reproduction or networking permitted without license from IHS
Not for Resale

22 Modulation

The 8-bit bytes of each Recording Frame shall be transformed into 16-bit Code Words with the run length limitation that between 2 ONEs there shall be at least 2 ZEROs and at most 10 ZEROs (RLL 2,10). Annex G specifies the conversion tables to be applied. The Main Conversion table and the Substitution table specify a 16-bit Code Word for each 8-bit byte with one of 4 States. For each 8-bit byte, the tables indicate the corresponding Code Word, as well as the State for the next 8-bit byte to be encoded. The 16-bit Code Words shall be NRZI-converted into Channel bits before recording on the disk. See Figure 31.

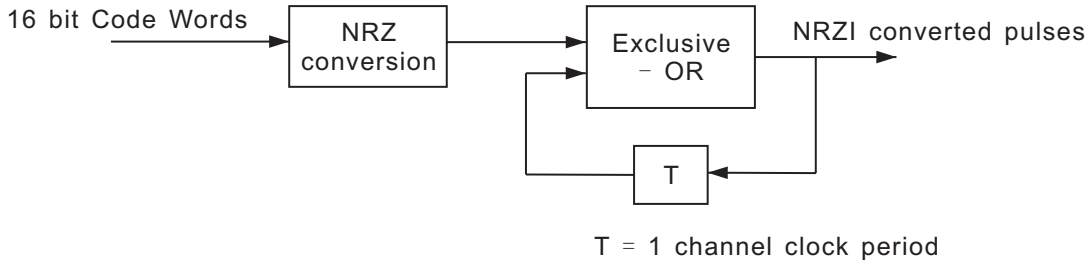

Figure 31 — NRZI conversion

23 Physical Sectors

The structure of a Physical Sector is shown in Figure 32. It shall consist of 13 rows, each comprising two Sync Frames. A Sync Frame shall consist of a SYNC Code from Table 3 and 1 456 Channel bits representing the first, respectively the second 91 8-bit bytes of a row of a Recording Frame. The first row of the Recording Frame is represented by the first row of the Physical Sector, the second by the second, and so on.

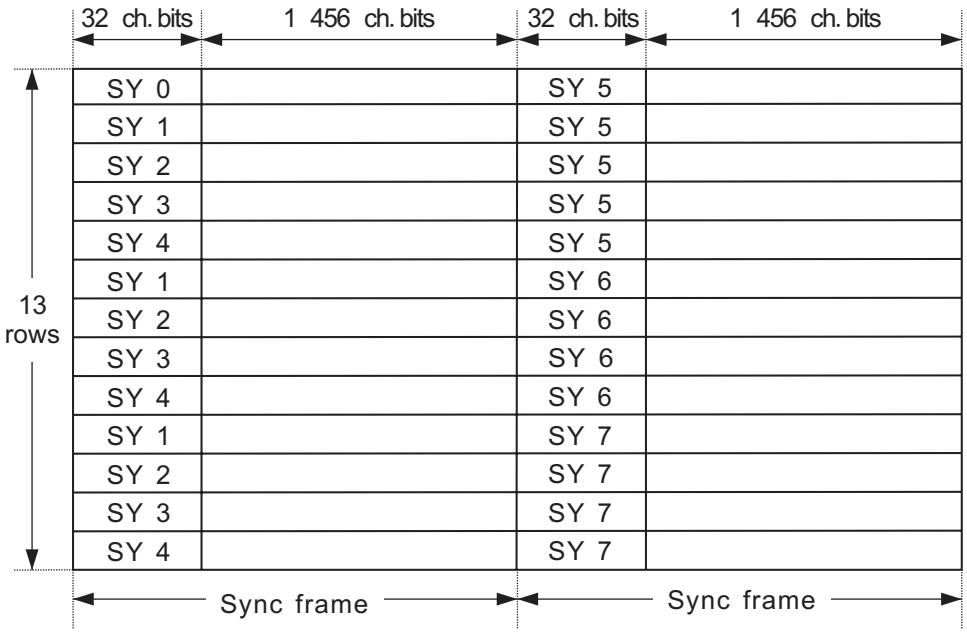

Figure 32 — Physical sector

© ISO/IEC 2006 – All rights reserved
Copyright International Organization for Standardization
Provided by IHS under license with ISO
No reproduction or networking permitted without license from IHS
Not for Resale

Recording shall start with the first Sync Frame of the first row, followed by the second Sync Frame of that row, and so on row-by-row.

Table 3 — SYNC Codes

State 1 and State 2					
	Primary SYNC codes (msb)	(lsb) (msb)		Secondary SYNC codes (lsb)	
SY0 =	0001001001000100	0000000000010001	/	0001001000000100	0000000000010001
SY1 =	0000010000000100	0000000000010001	/	0000010001000100	0000000000010001
SY2 =	0001000000000100	0000000000010001	/	0001000001000100	0000000000010001
SY3 =	0000100000000100	0000000000010001	/	0000100001000100	0000000000010001
SY4 =	0010000000000100	0000000000010001	/	0010000001000100	0000000000010001
SY5 =	0010001001000100	0000000000010001	/	0010001000000100	0000000000010001
SY6 =	0010010010000100	0000000000010001	/	0010000010000100	0000000000010001
SY7 =	0010010001000100	0000000000010001	/	0010010000000100	0000000000010001
State 3 and State 4					
	Primary SYNC codes (msb)	(lsb) (msb)		Secondary SYNC codes (lsb)	
SY0 =	1001001000000100	0000000000010001	/	1001001001000100	0000000000010001
SY1 =	1000010001000100	0000000000010001	/	1000010000000100	0000000000010001
SY2 =	1001000001000100	0000000000010001	/	1001000000000100	0000000000010001
SY3 =	1000001001000100	0000000000010001	/	1000001000000100	0000000000010001
SY4 =	1000100001000100	0000000000010001	/	1000100000000100	0000000000010001
SY5 =	1000100100000100	0000000000010001	/	1000000100000100	0000000000010001
SY6 =	1001000010000100	0000000000010001	/	1000000001000100	0000000000010001
SY7 =	1000100010000100	0000000000010001	/	1000000010000100	0000000000010001

24 Suppress control of the d.c. component

To ensure a reliable radial tracking and a reliable detection of the HF signals, the low frequency content of the stream of Channel bit patterns should be kept as low as possible. In order to achieve this, the Digital Sum Value (DSV, see 4.3) shall be kept as low as possible. At the beginning of the modulation, the DSV shall be set to 0.

The different ways of diminishing the current value of the DSV are as follows.

a) Choice of SYNC Codes between Primary or Secondary SYNC Codes

b) For the 8-bit bytes in the range 0 to 87, the Substitution table offers an alternative 16-bit Code Word for all States

c) For the 8-bit bytes in the range 88 to 255, when the prescribed State is 1 or 4, then the 16-bit Code Word can be chosen either from State 1 or from State 4, so as to ensure that the RLL requirement is met.

In order to use these possibilities, two data streams, Stream 1 and Stream 2, are generated for each Sync Frame. Stream 1 shall start with the Primary SYNC Code and Stream 2 with the Secondary SYNC Code of the same category of SYNC Codes. As both streams are modulated individually, they generate a different DSV because of the difference between the bit patterns of the Primary and Secondary SYNC Codes.

In the cases b) and c), there are two possibilities to represent a 8-bit byte. The DSV of each stream is computed up to the 8-bit byte preceding the 8-bit byte for which there is this choice. The stream with the lowest $|DSV|$ is selected and duplicated to the other stream. Then, one of the representations of the next

© ISO/IEC 2006 – All rights reserved

Copyright International Organization for Standardization
Provided by IHS under license with ISO
No reproduction or networking permitted without license from IHS
Not for Resale

8-bit byte is entered into Stream 1 and the other into Stream 2. This operation is repeated each time case b) or c) occurs.

Whilst case b) always occurs at the same pattern position in both streams, case c) may occur in one of the streams and not in the other because, for instance, the next State prescribed by the previous 8-bit byte can be 2 or 3 instead of 1 or 4. In that case the following 3-step procedure shall be applied.

1) Compare the |DSV|s of both streams.
2) If the |DSV| of the stream in which case c) occurs is smaller than that of the other stream, then the stream in which case c) has occurred is chosen and duplicated to the other stream. One of the representations of the next 8-bit byte is entered into this stream and the other into the other stream.
3) If the |DSV| of the stream in which case c) has occurred is larger than that of the other stream, then case c) is ignored and the 8-bit byte is represented according to the prescribed State.

In both cases b) and c), if the |DSV|s are equal, the decision to choose Stream 1 or Stream 2 is implementation-defined.

The procedure for case a) shall be as follows;

1) At the end of a Sync Frame, whether or not case b) and or case c) have occurred, the DSV of the whole Sync Frame is computed and the stream with the lower |DSV| is selected.
2) If this DSV is greater than + 63 or smaller than -64, then the SYNC Code at the beginning of the Sync Frame is changed from Primary to Secondary or vice versa. If this yields a smaller |DSV|, the change is permanent, if the |DSV| is not smaller, the original SYNC Code is retained.

During the DSV computation, the actual values of the DSV may vary between - 1 000 and + 1 000, thus it is recommended that the count range for the DSV be at least from - 1 024 to + 1 023.

--`,,```,,,,````-`-`,,`,,`,`,,`---

© ISO/IEC 2006 – All rights reserved
Copyright International Organization for Standardization
Provided by IHS under license with ISO
No reproduction or networking permitted without license from IHS
Not for Resale

Section 5 — Format of the Information Zones

25 General description of an Information Zone

The Information Zone shall be divided in three parts: the Lead-in Zone, the Data Zone and the Lead-out Zone. In SL disks and in DL disks in PTP mode there is one Information Zone per layer. In DL disks in OTP mode, there is only one Information Zone extending over two layers. In DL disks in OTP mode, the Information Zone has a Middle Zone in each layer to allow the read-out beam to move from Layer 0 to Layer 1. See Figure 15 (C). The Data Zone is intended for the recording of Main Data. The Lead-in Zone contains control information. The Lead-out Zone allows for a continuous smooth read-out.

26 Layout of the Information Zone

The Information Zone of SL disks and of DL disks in PTP mode shall be sub-divided as specified in this clause.

26.1 Physical Sector numbering

Type A disk:

In Type A disk, physical sector of the L0 layer is numbered in the same way as that of Type B disk in PTP mode is. The last address of L0 layer shall be a multiple of 16. The dummy layer shall follow the same physical sector numbering rule as the L1 layer of Type B disk in OTP mode does.

Type B disk in PTP mode:

In each information layer, the physical sector address begins at the innermost radius of the lead-in zone and incremented along the track spiral, through the data zone, up to the last value at the outermost radius of the Lead-out zone, independent of the layer number. The last address of each layer shall be a multiple of 16.

Type B disk in OTP mode:

In the L0 layer, the sector address begins at the innermost radius of the Lead-in zone and incremented along the track spiral, through the data zone, up to the last value at the outermost radius of the middle zone. The last address of L0 layer shall be a multiple of 16. Sectors having addresses that are one's complement of each other shall be at approximately the same radius but in different layers. The radial difference of these two sectors shall be less than ± 0,5 mm. In the L1 layer, the sector address shall begin as a multiple of 16 at the outermost radius of the data zone and shall be incremented along the track spiral, through the data zone, up to the last value at the innermost radius of the lead-out zone.

--`,,```,,,,````-`-`,,`,,`,`,,`---

© ISO/IEC 2006 – All rights reserved

Copyright International Organization for Standardization
Provided by IHS under license with ISO
No reproduction or networking permitted without license from IHS
Not for Resale

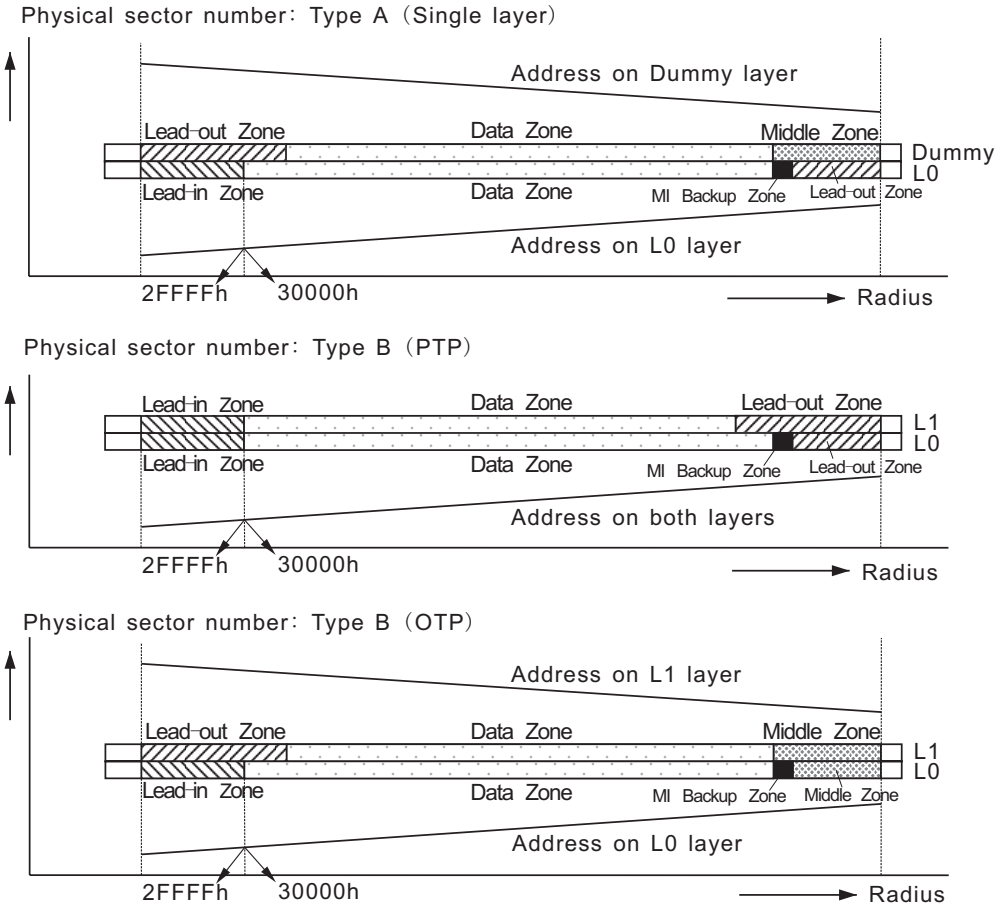

Figure 33 — Physical Sector numbering on Type A and Type B

26.2 Lead-in Zone

The Lead-in Zone is the innermost zone of the Information Zone. It shall consist of the following parts:

- Initial Zone,
- MI Zone
- Control Data Zone, and
- Buffer Zone.

See Figure 34.

The Sector Number of the first Physical Sector of each part is indicated in Figure 34 in hexadecimal and in decimal notation.

© ISO/IEC 2006 – All rights reserved
Copyright International Organization for Standardization
Provided by IHS under license with ISO
No reproduction or networking permitted without license from IHS
Not for Resale

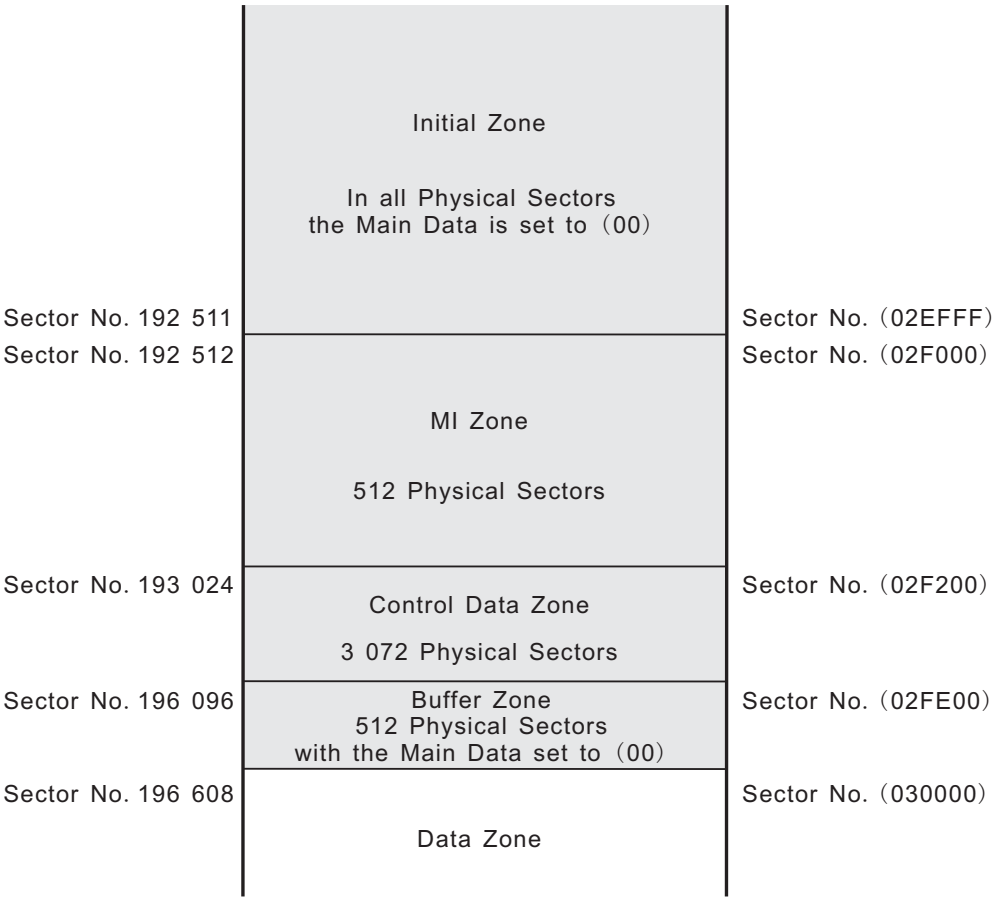

Figure 34 — Lead-in Zone

26.2.1 Initial Zone

The Main Data of the Data Frames eventually recorded as Physical Sectors in the Initial Zone shall have been set to (00). This International Standard does not specify the number of Physical Sectors in the Initial Zone. However, the Sector Number of the first Physical Sector of the Data Zone is large enough so as to prevent a Sector Number 0 to occur in the Initial Zone.

26.2.2 MI Zone

This field consists of 512 physical sectors. An agreement between the interchange parties is required to determine the format and the contents of these bytes. Else all these bytes shall be set to (00).

26.2.3 Buffer Zone

This zone shall consist of 512 Physical Sectors from 32 ECC Blocks. The Main Data of the Data Frames eventually recorded as Physical Sectors in this zone shall have been set to (00).

26.2.4 Control Data Zone

This zone shall consist of 3 072 Physical Sectors from 192 ECC Blocks. The content of the 16 Physical Sectors of each ECC Block is repeated 192 times. The structure of a Control Data Block shall be as shown in Figure 35.

© ISO/IEC 2006 – All rights reserved

Copyright International Organization for Standardization
Provided by IHS under license with ISO
No reproduction or networking permitted without license from IHS
Not for Resale

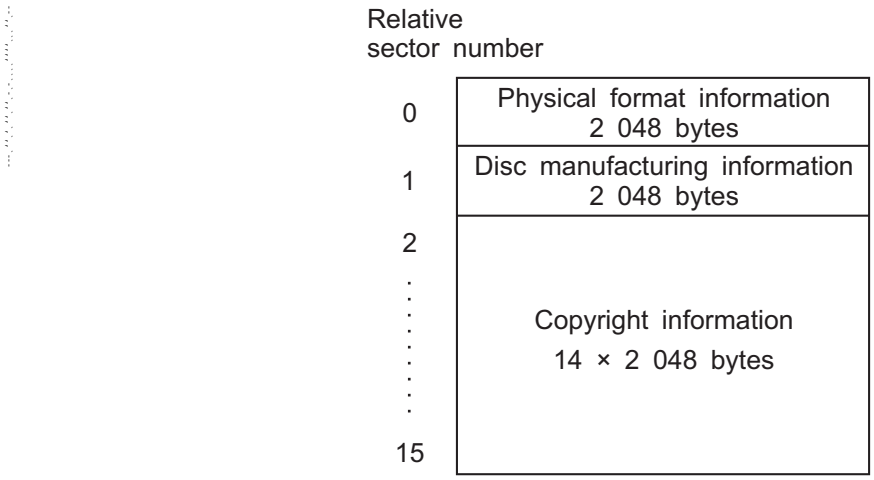

Figure 35 — Structure of a Control Data Block

26.2.4.1 Physical format information

This information shall comprise the 2 048 bytes shown in table and described below.

Table 4 — Physical format information

Byte Number	Contents	Number of bytes
0	Disk Category and Version Number	1
1	Set to all ZEROs	1
2	Disk Structure	1
3	Recorded Density	1
4 - 15	Data Zone Allocation	12
16	Set to all ZEROs	1
17 - 18	Media Attribute	2
19 - 2047	Set to all ZEROs	2 029

Byte 0 - Disk Category and Version Number

Bits b_0 to b_3 shall specify the Version Number:

They shall be set to 0000, indicating the standard this International Standard proposes.

Bits b_4 to b_7 shall specify the Disk Category:

These bits shall be set to 1000, indicating a read-only disk, and other settings are prohibited by this International Standard.

© ISO/IEC 2006 – All rights reserved
Copyright International Organization for Standardization
Provided by IHS under license with ISO
No reproduction or networking permitted without license from IHS
Not for Resale

Byte 1 - Disk Size and Maximum Transfer Rate

This byte shall be set to all ZERO

Byte 2 - Disk Structure

Bits b_0 to b_3

They shall be set to 0001

Bit b_4 shall specify the track path

if set to ZERO, it specifies PTP on DL disks or SL disks.

if set to ONE, it specifies OTP on DL disks

Bits b_5 and b_6 shall specify the disk Type

if set to 00, they specify Type A

if set to 01, they specify Type B

Bit b_7 shall be set to ZERO.

Other settings are prohibited by this International Standard.

Byte 3 - Recording Density

Bits b_0 to b_3 shall specify the average track pitch;

they shall be set to 0000, indicating an average track pitch of 0,70 µm

Bits b_4 to b_7 shall specify the average Channel bit length;

they shall be set to 1110, indicating an average Channel bit length of 0,139 µm.

Other settings are prohibited by this International Standard.

Bytes 4 to 15 - Data Zone Allocation

Byte 4 shall be set to (00).

Bytes 5 to 7 shall be set to (030000) to specify the Sector Number 196 608 of the first Physical Sector of the Data Zone

Byte 8 shall be set to (00).

Bytes 9 to 11 shall specify the Sector Number of the last Physical Sector of the Data Zone

Byte 12 shall be set to (00)

Byte 13 to 15 shall be set to (00) on SL disks and DL disks in PTP mode, and to the Sector Number of the last Physical Sector of Layer 0 on DL disks in OTP mode.

Byte 16

Shall be set to (00).

Bytes 17 to 18 - Media Attribute

This 2-byte field may be used for media attribute information. An agreement between the interchange parties is required to determine the format and the contents of these bytes, else these bytes shall be set to ZEROs.

© ISO/IEC 2006 – All rights reserved

Copyright International Organization for Standardization
Provided by IHS under license with ISO
No reproduction or networking permitted without license from IHS
Not for Resale

Bytes 19 to 2 047

This 2 029-byte field shall be set to all (00) and other settings are prohibited by this International Standard.

26.2.4.2 Disk manufacturing information

This 2 048-byte field shall be set to all (00) or may contain disk manufacturing information, and may be ignored in information interchange.

26.2.4.3 Copyright information

This 28 672-byte field shall be set to all (00) or may contain copyright information, and may be ignored in information interchange.

26.3 Middle Zone

The Main Data of the Data Frames eventually recorded as Physical Sectors in the Middle Zone shall have been set to (00). This International Standard does not specify the number of Physical Sectors in the Middle Zone. But it shall extend at least to 58,2 mm in diameter.

26.4 Lead-out Zone

The Main Data of the Data Frames eventually recorded as Physical Sectors in the Lead-out Zone shall have been set to (00). This International Standard does not specify the number of Physical Sectors in the Lead-out Zone. But in case of L0 layer of SL disks and DL disks in PTP mode, it shall extend at least to 58,2 mm in diameter.

26.5 MI Backup Zone

The content of this zone shall be identical to that of MI Zone.

The MI Backup Zone shall follow the Data zone in layer 0 of any disk Type. The bits b_{26} and b_{27} in ID of this data field shall be set to;

01 when this zone is followed by the Lead-out Zone

11 when this zone is followed by the Middle Zone

The maximum diameter of the MI Backup Zone shall be 56,1mm.

© ISO/IEC 2006 – All rights reserved
Copyright International Organization for Standardization
Provided by IHS under license with ISO
No reproduction or networking permitted without license from IHS
Not for Resale

Annex A
(normative)

Compliance test

A.1 Test method

The compliance test checks the flatness and flexibility of the case by forcing the four reference surfaces of the case into a plane. The test is made by placing the cartridge on the supports of a gauge and applying forces on the cartridge opposite to the supports.

A.2 Location of the four reference surfaces

The location of the four reference surfaces S1, S2, S3 and S4 is defined in 10.3.4 and Figure 4.

A.3 Test gauge

The test gauge consists of a base plate on which four posts P1, P2, P3 and P4 are fixed so as to correspond to the four surfaces S1, S2, S3 and S4, respectively (see Figure A.1). The dimensions are as follows (see Figure A.2):

Posts P1 and P2

D_{A1} = 5,6 mm ± 0,1 mm

$D_{A2} = 3{,}60\ \text{mm}\ ^{-0{,}02\ \text{mm}}_{-0{,}07\ \text{mm}}$

H_{A1} = 3,0 ± 0,1 mm

The top of the posts shall be chamfered by

C_{A1} = 0,5 ± 0,1 mm

Posts P3 and P4

D_{A3} = 4,0 mm ± 0,1 mm.

After assembly, the upper annular surfaces of the four posts shall lie between two horizontal planes spaced 0,01 mm apart.

A.4 Vertical downward force

The cartridge shall be placed with its reference surfaces onto the posts of the horizontal gauge. A vertical downward force Fc shall be exerted on the cartridge opposite each of the four posts.

© ISO/IEC 2006 – All rights reserved

Copyright International Organization for Standardization
Provided by IHS under license with ISO
No reproduction or networking permitted without license from IHS
Not for Resale

A.5 Requirements

Under the conditions of xA.4, three of the four surfaces S1 to S4 shall be in contact with the annular surface of their respective posts, and any gap between the remaining surface S and the annular surface of its post shall not exceed 0,3 mm without Fc and 0,1 mm with Fc of 0,5N.

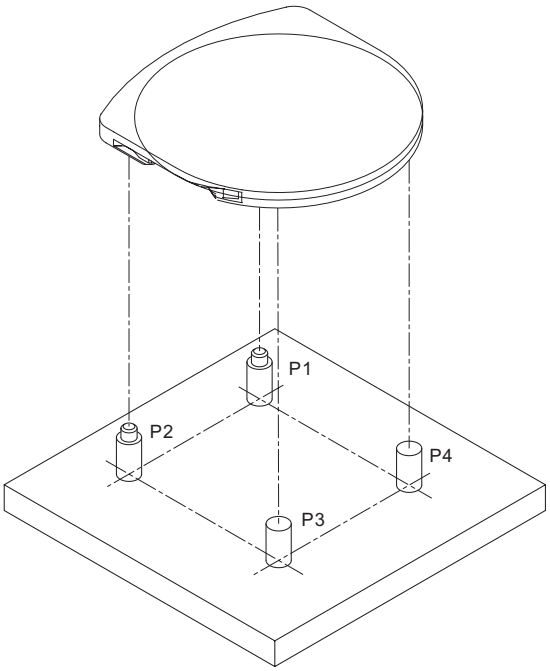

Figure A.1 — Test gauge

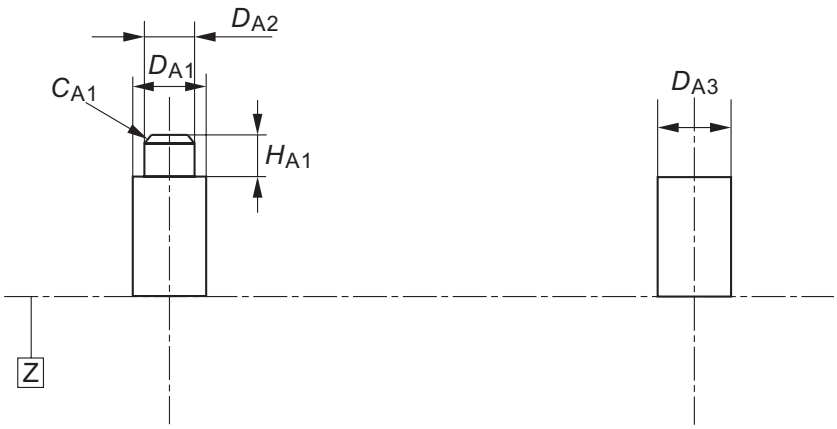

Figure A.2 — Dimensions of Test gauge

© ISO/IEC 2006 – All rights reserved
Copyright International Organization for Standardization
Provided by IHS under license with ISO
No reproduction or networking permitted without license from IHS
Not for Resale

Annex B
(normative)

Measurement of the angular deviation α

The angular deviation is the angle α formed by an incident beam perpendicular to the Reference Plane P with the reflected beam. See Figure B.1.

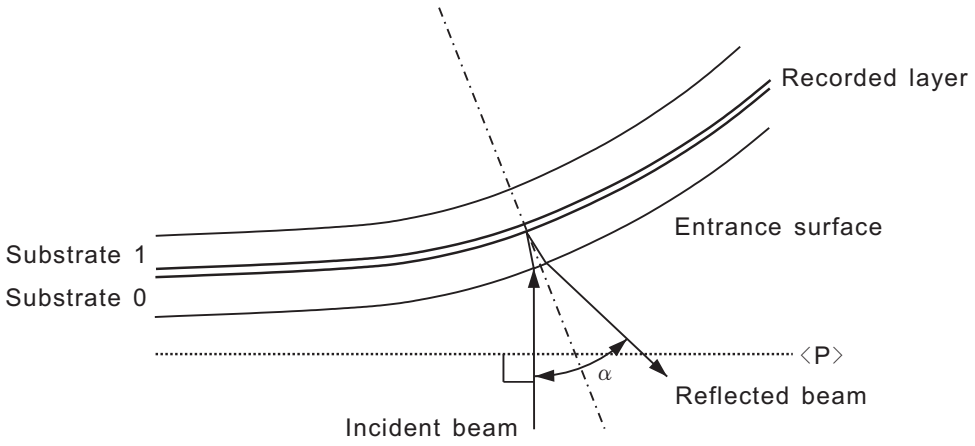

Figure B.1 — Angular deviation α

For measuring the angular deviation *α*, the disk shall be clamped with the magnetic force specified in 9.2 and the clamping zone extending from diameter 12, 0 mm to 16,4 mm.

© ISO/IEC 2006 – All rights reserved

Copyright International Organization for Standardization
Provided by IHS under license with ISO
No reproduction or networking permitted without license from IHS
Not for Resale

Annex C
(normative)

Measurement of birefringence

C.1 Principle of the measurement

In order to measure the birefringence, circularly polarized light in a parallel beam is used. The phase retardation is measured by observing the ellipticity of the reflected light.

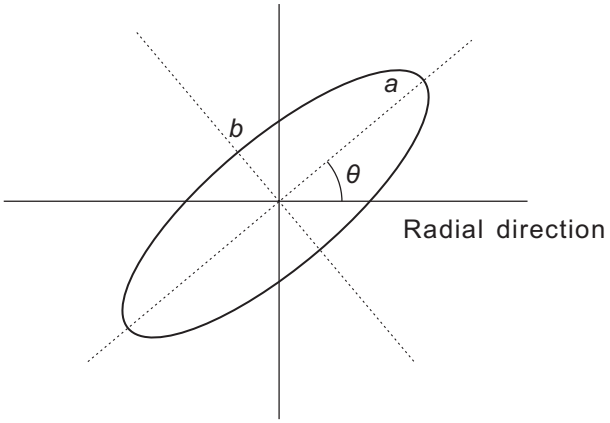

Figure C.1 — Ellipse with ellipticity e = b/a and orientation θ

The orientation θ of the ellipse is determined by the orientation of the optical axis

$$\theta = \gamma - \pi/4 \quad \text{(C1)}$$

where γ is the angle between the optical axis and the radial direction.

The ellipticity $e = b/a$ is a function of the phase retardation δ

$$e = \tan\left[\frac{1}{2}\left(\frac{\pi}{2} - \delta\right)\right] \quad \text{(C2)}$$

When the phase retardation δ is known the birefringence BR can be expressed as a fraction of the wavelength

$$BR = \frac{\lambda}{2\pi}\delta \quad \text{nm} \quad \text{(C3)}$$

Thus, by observing the elliptically polarized light reflected from the disk, the birefringence can be measured and the orientation of the optical axis can be assessed as well.

© ISO/IEC 2006 – All rights reserved
Copyright International Organization for Standardization
Provided by IHS under license with ISO
No reproduction or networking permitted without license from IHS
Not for Resale

C.2 Measurements conditions

The measurement of the birefringence specified above shall be made under the following conditions.

Mode of measurement in reflection, double pass through the substrate

Wavelength λ of the laser light	660 nm ± 5 nm
Beam diameter (FWHM)	1,0 mm ± 0,2 mm
Angle β of incidence in radial direction relative to the radial plane perpendicular to the Reference Plane P	7,0° ± 0,2°
Clamping and chucking conditions	as specified by Annex B
Disk mounting	horizontally
Rotation	less than 1 Hz
Temperature and relative humidity	as specified in 8.1.1

C.3 Example of a measuring set-up

Whilst this International Standard does not prescribe a specific device for measuring birefringence, the device shown schematically in Figure C.2 as an example, is well suited for this measurement.

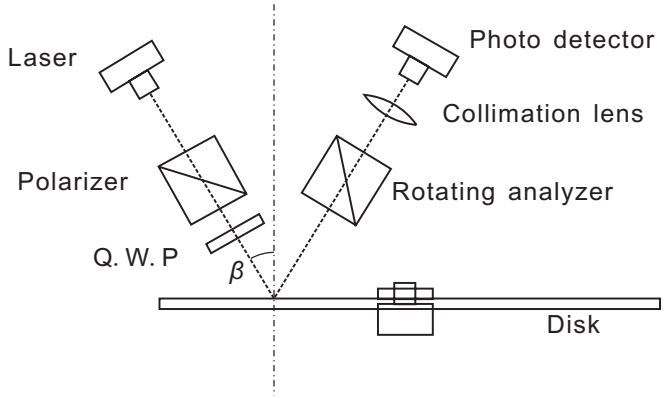

Figure C.2 — Example of a device for the measurement of birefringence

Light from a laser source, collimated into a polarizer (extinction ratio ≈ 10^{-5}), is made circular by a $\lambda/4$ plate. The ellipticity of the reflected light is analyzed by a rotating analyzer and a photo detector. For every location on the disk, the minimum and the maximum values of the intensity are measured. The ellipticity can then be calculated as

$$e^2 = \frac{I_{\min}}{I_{\max}} \tag{C4}$$

Combining equations II, III and IV yields

$$BR = \lambda/4 - \lambda/\pi \times \arctan\sqrt{\frac{I_{\min}}{I_{\max}}}$$

--`,,```,,,,````-`-`,,`,,`,`,,`---
© ISO/IEC 2006 – All rights reserved
Copyright International Organization for Standardization
Provided by IHS under license with ISO
No reproduction or networking permitted without license from IHS
Not for Resale

This device can be easily calibrated as follows

I_{min} is set to 0 by measuring a polarizer or a $\lambda/4$ plate,

$I_{min} = I_{max}$ when measuring a mirror

Apart of the d.c. contribution of the front surface reflection, a.c. components may occur, due to the interference of the reflection(s) of the front surface with the reflection(s) from the recorded layer. These a.c. reflectance effects are significant only if the disk substrate has an extremely accurate flatness and if the light source has a high coherence.

--`,,```,,,,````-`-`,,`,,`,`,,`---

© ISO/IEC 2006 – All rights reserved
Copyright International Organization for Standardization
Provided by IHS under license with ISO
No reproduction or networking permitted without license from IHS
Not for Resale

Annex D
(normative)

Measurement of light reflectance

D.1 Calibration method

A good reference disk shall be chosen, for instance 0,4 mm glass disk with a golden reflective mirror. This reference disk shall be measured by a parallel beam as shown in Figure D.1

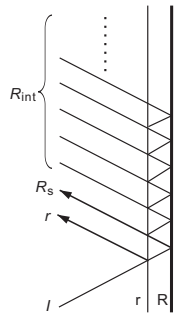

Figure D.1 — Reflectance calibration

In this figure the following applies.

I = incident beam

r = reflectance of the entrance surface

R_s = main reflectance of the recorded layer

R_{int} = other reflectances of the entrance surface and of the recorded layer

$R//$ = measured value, using the arrangement of Figure D.1

$R// = r + R_s + R_{int}$

$r = ((n\text{-}1) / (n\text{+}1))2$ where n is the refraction index of the substrate

$R_s = R// - r - R_{int}$

$R_s = [(1 - r)2 \times (R// - r)] / [1 - r \times (2 - R//)]$

The reference disk shall be measured on a reference drive and mirror measured by the focused beam is equated to Rs as determined above.

Now the arrangement is calibrated and the focused reflectivity is a linear function of the reflectivity of the recorded layer, independently from the reflectivity of the entrance surface.

D.2 Measuring method

The measuring method comprises the following steps.

Measure the reflective light power D_s from the reference disk with calibrated reflectivity R_s.

© ISO/IEC 2006 – All rights reserved

Copyright International Organization for Standardization
Provided by IHS under license with ISO
No reproduction or networking permitted without license from IHS
Not for Resale

Measure I_{14H} in the Information Zone of the disk.

Calculate the reflectivity as follows

$$R_{14H} = R_s \times \frac{I_{14H}}{D_s}$$

© ISO/IEC 2006 – All rights reserved
Copyright International Organization for Standardization
Provided by IHS under license with ISO
No reproduction or networking permitted without license from IHS
Not for Resale

Annex E
(normative)

Tapered cone for disk clamping

The device used for centring the disk for measurement shall be a cone with a taper angle β = 30,0° ± 0,5°. See Figure E.1.

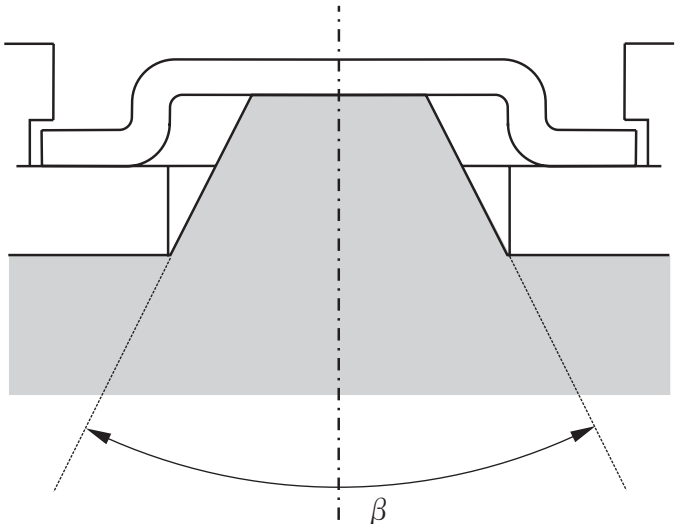

Figure E.1 — Tapered cone

© ISO/IEC 2006 – All rights reserved

Copyright International Organization for Standardization
Provided by IHS under license with ISO
No reproduction or networking permitted without license from IHS
Not for Resale

Annex F
(normative)

Measurement of jitter

Jitter shall be measured under the conditions specified in 9.1 with the additional conditions specified in this Annex F.

F.1 System diagram for jitter measurement

The general system diagram for jitter measurement shall be as shown in Figure F.1.

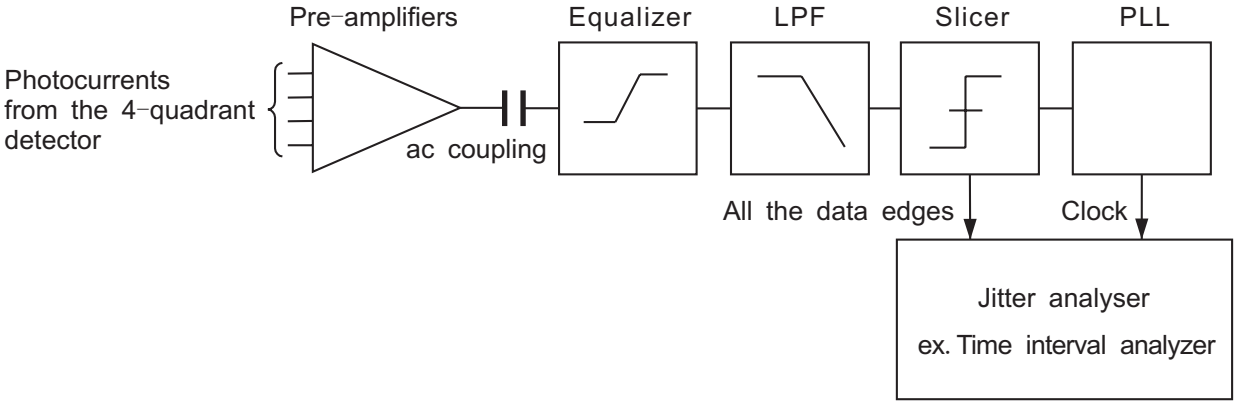

Figure F.1 — General diagram for jitter measurement

F.2 Open loop transfer function for PLL

The open-loop transfer function for the PLL shown in Figure F.1 shall be as shown in Figure F.2.

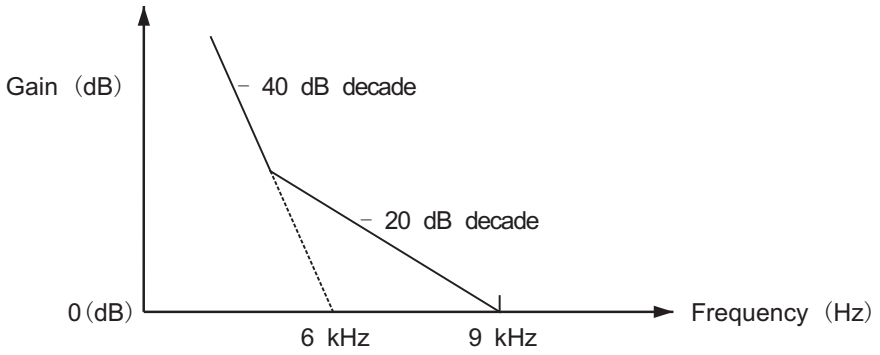

Figure F.2 — Schematic representation of the open-loop transfer function for PLL

© ISO/IEC 2006 – All rights reserved
Copyright International Organization for Standardization
Provided by IHS under license with ISO
No reproduction or networking permitted without license from IHS
Not for Resale

F.3 Slicer

The slicer shall be a feed-back auto-slicer with a - 3 dB closed-loop bandwidth of 5 kHz, 1st order integrating.

F.4 Conditions for measurement

The bandwidth of the pre-amplifier of the photo detector shall be greater than 20 MHz in order to prevent group-delay distortion.

Low-pass filter: 6th order Bessel filter, f_c(- 3 dB) = 8,2 MHz

Example of an analogue equalizer: 3-tap transversal filter with transfer function

$$H(z) = 1{,}35\, z^{-2{,}093} - 0{,}175\left(1 + z^{-4{,}186}\right)$$

Filtering and equalization:

- Gain variation: 1 dB max. (below 7 MHz)
- Group delay variation: 3 ns max. (below 6,5 MHz)
- (Gain at 5,0 MHz - Gain at 0 Hz) = 3,2 dB ± 0,3 dB

a.c. coupling (high-pass filter): 1st order, f_c(- 3 dB) = 1 kHz
Correction of the angular deviation: only d.c. deviation.

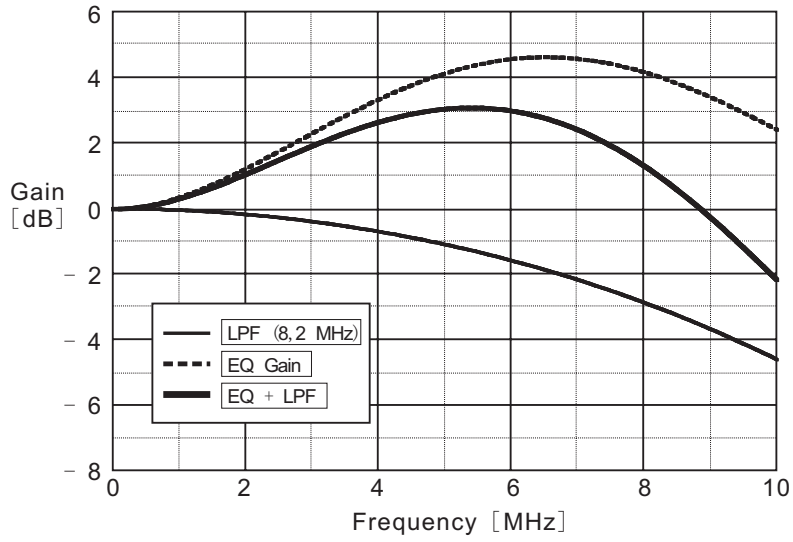

Figure F.3 — Frequency characteristics for the equalizer and the low-pass filter

F.5 Measurement

The jitter of all leading and trailing edges over one rotation shall be measured.

Under this measurement, the jitter shall be less than 8,0 % of the Channel bit clock period.

--`,,```,,,,````-`-`,,`,,`,`,,`---
© ISO/IEC 2006 – All rights reserved
Copyright International Organization for Standardization
Provided by IHS under license with ISO
No reproduction or networking permitted without license from IHS
Not for Resale

Annex G
(normative)

8-to-16 Modulation with RLL (2,10) requirements

Table G.1 and Table G.2 list the 16-bit Code Words into which the 8-bit coded data bytes have to be transformed. Figure G.1 shows schematically how the Code Words and the associated State specification are generated.

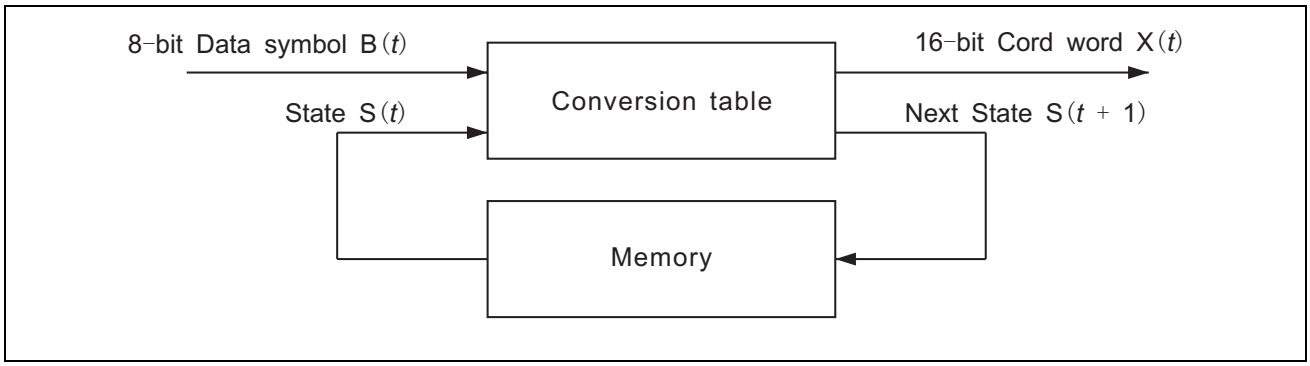

Figure G.1 — Code Words generation

In this figure:

$X(t) = H\{B(t), S(t)\}$ $\quad X_{15}(t)$ = msb and $X_0(t)$ = lsb
$S(t+1) = G\{B(t), S(t)\}$
H is the output function
G is the next-state function

The Code Words leaving the States shall be chosen so that the concatenation of Code Words entering a State and those leaving that State satisfy the requirement that between two ONEs there shall be at least 2 and at most 10 ZEROs.

As additional requirements:

- Code Words leaving State 2 shall have both bit x_{15} and bit x_3 set to ZERO, and
- in Code Words leaving State 3 bit x_{15} or bit x_3 or both shall be set to ONE.

This means that the Code Word sets of States 2 and 3 are disjoint.

© ISO/IEC 2006 – All rights reserved
Copyright International Organization for Standardization
Provided by IHS under license with ISO
No reproduction or networking permitted without license from IHS
Not for Resale

Code Word X(*t*)	Next State S(*t*+1)	Code Word X(*t*+1)
Ends with 1 or no trailing ZERO	State 1	Starts with 2 or up to 9 leading ZEROs
Ends with 2 or up to 5 trailing ZEROs	State 2	Starts with 1 or up to 5 leading ZEROs, and $X_{15}(t+1), X_3(t+1) = 0,0$
Ends with 2 or up to 5 trailing ZEROs	State 3	Starts with none or up to 5 leading ZEROs, and $X_{15}(t+1), X_3(t+1) \neq 0,0$
Ends with 6 or up to 9 trailing ZEROs	State 4	Starts with 1 or no leading ZERO

Figure G.2 — Determination of States

Note that when decoding the recorded data, knowledge about the encoder is required to be able to reconstitute the original main Data.

$$B(t) = H^{-1} \{X(t), S(t)\}$$

Because of the involved error propagation, such state-dependent decoding is to be avoided. In the case of this 8-to-16 modulation, the conversion tables have been chosen in such a way that knowledge about the State is not required in most cases. As can be gathered from the tables, in some cases, two 8-bit bytes, for instance the 8-bit bytes 5 and 6 in States 1 and 2 in Table H.1, generate the same 16-bit Code Words. The construction of the tables allows solving this apparent ambiguity. Indeed, if two identical Code Words leave a State, one of them goes to State 2 and the other to State 3. Because the setting of bits X_{15} and X_3 is always different in these two States, any Code Word can be uniquely decoded by analysing the Code Word itself together with bits X_{15} and X_3 of the next Code Word:

$$B(t) = H^{-1} \{ X(t), X_{15}(t+1), X_3(t+1) \}$$

In the tables, the 8-bit bytes are identified by their decimal value.

--`,,```,,,,````-`-`,,`,,`,`,,`---
© ISO/IEC 2006 – All rights reserved
Copyright International Organization for Standardization
Provided by IHS under license with ISO
No reproduction or networking permitted without license from IHS
Not for Resale

Table G.1 — Main Conversion Table

8-bit byte	State 1		State 2		State 3		State 4	
	Code Word msb lsb	Next State	Code Word msb lsb	Next State	Code Word msb lsb	Next State	Code Word msb lsb	Next State
0	0010000000001001	1	0100000100100000	2	0010000000001001	1	0100000100100000	2
1	0010000000010010	1	0010000000010010	1	1000000100100000	3	1000000100100000	3
2	0010000100100000	2	0010000100100000	2	1000000000010010	1	1000000000010010	1
3	0010000001001000	2	0100010010000000	4	0010000001001000	2	0100010010000000	4
4	0010000010010000	2	0010000010010000	2	1000000100100000	2	1000000100100000	2
5	0010000000100100	2	0010000000100100	2	1001001000000000	4	1001001000000000	4
6	0010000000100100	3	0010000000100100	3	1000100100000000	4	1000100100000000	4
7	0010000001001000	3	0100000000010010	1	0010000001001000	3	0100000000010010	1
8	0010000010010000	3	0010000010010000	3	1000010010000000	4	1000010010000000	4
9	0010000100100000	3	0010000100100000	3	1001001000000001	1	1001001000000001	1
10	0010010010000000	4	0010010010000000	4	1000100100000001	1	1000100100000001	1
11	0010001001000000	4	0010001001000000	4	1000000010010000	3	1000000010010000	3
12	0010010010000001	1	0010010010000001	1	1000000010010000	2	1000000010010000	2
13	0010001001000001	1	0010001001000001	1	1000010010000001	1	1000010010000001	1
14	0010000001001001	1	0100000000100100	3	0010000001001001	1	0100000000100100	3
15	0010000100100001	1	0010000100100001	1	1000001001000001	1	1000001001000001	1
16	0010000010010001	1	0010000010010001	1	1000000100100001	1	1000000100100001	1
17	0010000000100010	1	0010000000100010	1	1000001001000000	4	1000001001000000	4
18	0001000000001001	1	0100000010010000	2	0001000000001001	1	0100000010010000	2
19	0010000000010001	1	0010000000010001	1	1001000100000000	4	1001000100000000	4
20	0001000000010010	1	0001000000010010	1	1000100010000000	4	1000100010000000	4
21	0000100000000010	1	0000100000000010	1	1000000010010001	1	1000000010010001	1
22	0000010000000001	1	0000010000000001	1	1000000001001001	1	1000000001001001	1
23	0010001000100000	2	0010001000100000	2	1000000001001000	2	1000000001001000	2
24	0010000100010000	2	0010000100010000	2	1000000001001000	3	1000000001001000	3
25	0010000010001000	2	0100000000100100	2	0010000010001000	2	0100000000100100	2
26	0010000001000100	2	0010000001000100	2	1000000000100010	1	1000000000100010	1
27	0001000100100000	2	0001000100100000	2	1000000000010001	1	1000000000010001	1
28	0010000000001000	2	0100000010010000	3	0010000000001000	2	0100000010010000	3
29	0001000010010000	2	0001000010010000	2	1001001000000010	1	1001001000000010	1
30	0001000001001000	2	0100000100100000	3	0001000001001000	2	0100000100100000	3
31	0001000000100100	2	0001000000100100	2	1001000100000001	1	1001000100000001	1
32	0001000000000100	2	0001000000000100	2	1000100100000010	1	1000100100000010	1
33	0001000000000100	3	0001000000000100	3	1000100010000001	1	1000100010000001	1
34	0001000000100100	3	0001000000100100	3	1000000000100100	2	1000000000100100	2
35	0001000001001000	3	0100001001000000	4	0001000001001000	3	0100001001000000	4
36	0001000010010000	3	0001000010010000	3	1000000000100100	3	1000000000100100	3
37	0001000100100000	3	0001000100100000	3	1000010001000000	4	1000010001000000	4
38	0010000000001000	3	0100100100000001	1	0010000000001000	3	0100100100000001	1
39	0010000001000100	3	0010000001000100	3	1001000010000000	4	1001000010000000	4
40	0010000010001000	3	0100010010000001	1	0010000010001000	3	0100010010000001	1
41	0010000100010000	3	0010000100010000	3	1000010010000010	1	1000010010000010	1
42	0010001000100000	3	0010001000100000	3	1000001000100000	2	1000001000100000	2
43	0010010001000000	4	0010010001000000	4	1000010001000001	1	1000010001000001	1
44	0001001001000000	4	0001001001000000	4	1000001000100000	3	1000001000100000	3
45	0000001000000001	1	0100010001000000	4	1000001001000010	1	0100010001000000	4

--`,,```,,,,````-`-`,,`,,`,`,,`---
Copyright International Organization for Standardization
Provided by IHS under license with ISO
No reproduction or networking permitted without license from IHS
Not for Resale
© ISO/IEC 2006 – All rights reserved

Table G.1 — Main Conversion Table (*continued*)

8-bit	State 1		State 2		State 3		State 4	
byte	Code Word msb lsb	Next State	Code Word msb lsb	Next State	Code Word msb lsb	Next State	Code Word msb lsb	Next State
46	0010010010000010	1	0010010010000010	1	1000001000100001	1	1000001000100001	1
47	0010000010001001	1	0100001001000001	1	0010000010001001	1	0100001001000001	1
48	0010010001000001	1	0010010001000001	1	1000000100010000	2	1000000100010000	2
49	0010001001000010	1	0010001001000010	1	1000000010001000	2	1000000010001000	2
50	0010001000100001	1	0010001000100001	1	1000000100010000	3	1000000100010000	3
51	0001000001001001	1	0100000100100001	1	0001000001001001	1	0100000100100001	1
52	0010000100100010	1	0010000100100010	1	1000000100100010	1	1000000100100010	1
53	0010000100010001	1	0010000100010001	1	1000000100010001	1	1000000100010001	1
54	0010000010010010	1	0010000010010010	1	1000000010010010	1	1000000010010010	1
55	0010000001000010	1	0010000001000010	1	1000000010001001	1	1000000010001001	1
56	0010000000100001	1	0010000000100001	1	1000000001000010	1	1000000001000010	1
57	0000100000001001	1	0100000010010001	1	0000100000001001	1	0100000010010001	1
58	0001001001000001	1	0001001001000001	1	1000000000100001	1	1000000000100001	1
59	0001000100100001	1	0001000100100001	1	0100000001001001	1	0100000001001001	1
60	0001000010010001	1	0001000010010001	1	1001001000010010	1	1001001000010010	1
61	0001000000100010	1	0001000000100010	1	1001001000001001	1	1001001000001001	1
62	0001000000010001	1	0001000000010001	1	1001000100000010	1	1001000100000010	1
63	0000100000010010	1	0000100000010010	1	1000000001000100	2	1000000001000100	2
64	0000010000000010	1	0000010000000010	1	0100000001001000	2	0100000001001000	2
65	0010010000100000	2	0010010000100000	2	1000010000100000	2	1000010000100000	2
66	0010001000010000	2	0010001000010000	2	1000001000010000	2	1000001000010000	2
67	0010000100001000	2	0100000000100010	1	0010000100001000	2	0100000000100010	1
68	0010000010000100	2	0010000010000100	2	1000000100001000	2	1000000100001000	2
69	0010000000010000	2	0010000000010000	2	1000000010000100	2	1000000010000100	2
70	0001000010001000	2	0100001000100000	2	0001000010001000	2	0100001000100000	2
71	0001001000100000	2	0001001000100000	2	0100000010001000	2	0100000010001000	2
72	0001000000001000	2	0100000100010000	2	0001000000001000	2	0100000100010000	2
73	0001000100010000	2	0001000100010000	2	1000000001000100	3	1000000001000100	3
74	0001000001000100	2	0001000001000100	2	0100000001001000	3	0100000001001000	3
75	0000100100100000	2	0000100100100000	2	1000010000100000	3	1000010000100000	3
76	0000100010010000	2	0000100010010000	2	1000001000010000	3	1000001000010000	3
77	0000100001001000	2	0100000001000100	2	0000100001001000	2	0100000001000100	2
78	0000100000100100	2	0000100000100100	2	1000000100001000	3	1000000100001000	3
79	0000100000000100	2	0000100000000100	2	1000000010000100	3	1000000010000100	3
80	0000100000000100	3	0000100000000100	3	0100000010001000	3	0100000010001000	3
81	0000100000100100	3	0000100000100100	3	1000100001000000	4	1000100001000000	4
82	0000100001001000	3	0100000001000100	3	0000100001001000	3	0100000001000100	3
83	0000100010010000	3	0000100010010000	3	1000000010001000	3	1000000010001000	3
84	0000100100100000	3	0000100100100000	3	1001001001001000	2	1001001001001000	2
85	0001000000001000	3	0100000100010000	3	0001000000001000	3	0100000100010000	3
86	0001000001000100	3	0001000001000100	3	1001001000100100	2	1001001000100100	2
87	0001000010001000	3	0100001000100000	3	0001000010001000	3	0100001000100000	3
88	0001000100010000	3	0001000100010000	3	1001001001001000	3	1001001001001000	3
89	0001001000100000	3	0001001000100000	3	1001000010000001	1	1001000010000001	1
90	0010000000010000	3	0010000000010000	3	1000100100010010	1	1000100100010010	1
91	0010000010000100	3	0010000010000100	3	1000100100001001	1	1000100100001001	1
92	0010000100001000	3	0100000000010001	1	0010000100001000	3	0100000000010001	1
93	0010001000010000	3	0010001000010000	3	1000100010000010	1	1000100010000010	1

--`,,```,,,,````-`-`,,`,,`,`,,`---

© ISO/IEC 2006 – All rights reserved
Copyright International Organization for Standardization
Provided by IHS under license with ISO
No reproduction or networking permitted without license from IHS
Not for Resale

Table G.1 — Main Conversion Table (*continued*)

8-bit byte	State 1		State 2		State 3		State 4	
	Code Word msb lsb	Next State	Code Word msb lsb	Next State	Code Word msb lsb	Next State	Code Word msb lsb	Next State
94	00100100001000000	3	0010010000100000	3	1000100001000001	1	1000100001000001	1
95	000001000000010	1	0100100100000010	1	1000010010010010	1	0100100100000010	1
96	0000000100000001	1	0100100010000001	1	1000010010001001	1	0100100010000001	1
97	0010010010001001	1	0100010000100000	2	0010010010001001	1	0100010000100000	2
98	0010010010010010	1	0010010010010010	1	1001001000000100	2	1001001000000100	2
99	0010010001000010	1	0010010001000010	1	1001001000100100	3	1001001000100100	3
100	0010010000100001	1	0010010000100001	1	1000010001000010	1	1000010001000010	1
101	0010001001001001	1	0100010010000010	1	0010001001001001	1	0100010010000010	1
102	0010001000100010	1	0010001000100010	1	1000010000100001	1	1000010000100001	1
103	0010001000010001	1	0010001000010001	1	1000001001001001	1	1000001001001001	1
104	0010000100010010	1	0010000100010010	1	1000001000100010	1	1000001000100010	1
105	0010000010000010	1	0010000010000010	1	1000001000010001	1	1000001000010001	1
106	0010000100001001	1	0100001000010000	2	0010000100001001	1	0100001000010000	2
107	0010000001000001	1	0010000001000001	1	1000000100010010	1	1000000100010010	1
108	0001001001000010	1	0001001001000010	1	1000000100001001	1	1000000100001001	1
109	0001001000100001	1	0001001000100001	1	1000000010000010	1	1000000010000010	1
110	0001000100100010	1	0001000100100010	1	1000000001000001	1	1000000001000001	1
111	0001000100010001	1	0001000100010001	1	0100000010001001	1	0100000010001001	1
112	0001000010010010	1	0001000010010010	1	1001001001001001	1	1001001001001001	1
113	0001000001000010	1	0001000001000010	1	1001001000100010	1	1001001000100010	1
114	0001000010001001	1	0100010000100000	3	0001000010001001	1	0100010000100000	3
115	0001000000100001	1	0001000000100001	1	1001001000010001	1	1001001000010001	1
116	0000100100100001	1	0000100100100001	1	1001000100010010	1	1001000100010010	1
117	0000100010010001	1	0000100010010001	1	1001000100001001	1	1001000100001001	1
118	0000100001001001	1	0100010001000001	1	0000100001001001	1	0100010001000001	1
119	0000100000100010	1	0000100000100010	1	1000100100100100	2	1000100100100100	2
120	0000100000010001	1	0000100000010001	1	1000100100000100	2	1000100100000100	2
121	0000010000001001	1	0100001001000010	1	0000010000001001	1	0100001001000010	1
122	0000010000010010	1	0000010000010010	1	1000100000100000	2	1000100000100000	2
123	0010010010000100	2	0010010010000100	2	1000010010000100	2	1000010010000100	2
124	0010010000010000	2	0010010000010000	2	1000010000010000	2	1000010000010000	2
125	0010001000001000	2	0100001000100001	1	0010001000001000	2	0100001000100001	1
126	0010001001000100	2	0010001001000100	2	1000001001000100	2	1000001001000100	2
127	0001000100001000	2	0100000100100010	1	0001000100001000	2	0100000100100010	1
128	0010000100100100	2	0010000100100100	2	1000001000001000	2	1000001000001000	2
129	0000100010001000	2	0100000100010001	1	0000100010001000	2	0100000100010001	1
130	0010000100000100	2	0010000100000100	2	1000000100100100	2	1000000100100100	2
131	0010000000100000	2	0010000000100000	2	1001001000000100	3	1001001000000100	3
132	0001001000010000	2	0001001000010000	2	1000100100100100	3	1000100100100100	3
133	0000100000001000	2	0100000010010010	1	0000100000001000	2	0100000010010010	1
134	0001000010000100	2	0001000010000100	2	1000100000100000	3	1000100000100000	3
135	0001000000010000	2	0001000000010000	2	1000010010000100	3	1000010010000100	3
136	0000100100010000	2	0000100100010000	2	1000010000010000	3	1000010000010000	3
137	0000100001000100	2	0000100001000100	2	1000001001000100	3	1000001001000100	3
138	0000010001001000	2	0100000001000010	1	0000010001001000	2	0100000001000010	1
139	0000010010010000	2	0000010010010000	2	1000001000001000	3	1000001000001000	3
140	0000010000100100	2	0000010000100100	2	1001000010000010	1	1001000010000010	1
141	0000010000000100	2	0000010000000100	2	1000000100000100	2	1000000100000100	2

© ISO/IEC 2006 – All rights reserved
Copyright International Organization for Standardization
Provided by IHS under license with ISO
No reproduction or networking permitted without license from IHS
Not for Resale

Table G.1 — Main Conversion Table (*continued*)

8-bit byte	State 1		State 2		State 3		State 4	
	Code Word msb lsb	Next State	Code Word msb lsb	Next State	Code Word msb lsb	Next State	Code Word msb lsb	Next State
142	0000010000000100	3	0000010000000100	3	1000000100100100	3	1000000100100100	3
143	0000010000100100	3	0000010000100100	3	1000000100000100	3	1000000100000100	3
144	0000010001001000	3	0100000010000100	2	0000010001001000	3	0100000010000100	2
145	0000010010010000	3	0000010010010000	3	1001000001000000	4	1001000001000000	4
146	0000100000001000	3	0100000000010000	2	0000100000001000	3	0100000000010000	2
147	0000100001000100	3	0000100001000100	3	1000000000100000	2	1000000000100000	2
148	0000100010001000	3	0100000010000100	3	0000100010001000	3	0100000010000100	3
149	0000100100010000	3	0000100100010000	3	1000000000100000	3	1000000000100000	3
150	0001000000010000	3	0001000000010000	3	0100000100001000	3	0100000100001000	3
151	0001000010000100	3	0001000010000100	3	1000000001000000	4	1000000001000000	4
152	0001000100001000	3	0100001000010000	3	0001000100001000	3	0100001000010000	3
153	0001001000010000	3	0001001000010000	3	1001000001000001	1	1001000001000001	1
154	0010000000100000	3	0010000000100000	3	0100000100001000	2	0100000100001000	2
155	0010000100000100	3	0010000100000100	3	1001000100100100	3	1001000100100100	3
156	0010000100100100	3	0010000100100100	3	1000100100100010	1	1000100100100010	1
157	0010001000001000	3	0100000000100001	1	0010001000001000	3	0100000000100001	1
158	0010001001000100	3	0010001001000100	3	1000100100000100	3	0100100100000000	4
159	0010010000010000	3	0010010000010000	3	1001001001000100	2	1001001001000100	2
160	0010010010000100	3	0010010010000100	3	1001001000001000	2	1001001000001000	2
161	0000001000010010	1	0100000000010000	3	1000100100010001	1	0100000000010000	3
162	0000001000001001	1	0100100100100100	2	1000100010010010	1	0100100100100100	2
163	0000000100000010	1	0100100100100100	3	1000100010001001	1	0100100100100100	3
164	0000000010000001	1	0100100100010010	1	1000100001000010	1	0100100100010010	1
165	0010010010010001	1	0010010010010001	1	1001000100100100	2	1001000100100100	2
166	0010010000100010	1	0010010000100010	1	1001000100000100	2	1001000100000100	2
167	0010010001001001	1	0100100100000100	2	0010010001001001	1	0100100100000100	2
168	0010010000010001	1	0010010000010001	1	1001001001000100	3	1001001001000100	3
169	0010001000010010	1	0010001000010010	1	1000100000100001	1	1000100000100001	1
170	0010000100000010	1	0010000100000010	1	1000010010010001	1	1000010010010001	1
171	0010001000001001	1	0100100000100000	3	0010001000001001	1	0100100000100000	3
172	0010000010000001	1	0010000010000001	1	1000010001001001	1	1000010001001001	1
173	0001001000100010	1	0001001000100010	1	1000010000100010	1	1000010000100010	1
174	0001001000010001	1	0001001000010001	1	1000010000010001	1	1000010000010001	1
175	0001000100010010	1	0001000100010010	1	1000001000010010	1	1000001000010010	1
176	0001000010000010	1	0001000010000010	1	1000001000001001	1	1000001000001001	1
177	0001001001001001	1	0100100010000010	1	0001001001001001	1	0100100010000010	1
178	0001000001000001	1	0001000001000001	1	1000000100000010	1	1000000100000010	1
179	0000100100100010	1	0000100100100010	1	1000000010000001	1	1000000010000001	1
180	0000100100010001	1	0000100100010001	1	0100100100001001	1	0100100100001001	1
181	0001000100001001	1	0100100000100000	2	0001000100001001	1	0100100000100000	2
182	0000100010010010	1	0000100010010010	1	0100010010001001	1	0100010010001001	1
183	0000100001000010	1	0000100001000010	1	0100001001001001	1	0100001001001001	1
184	0000100010001001	1	0100010010000100	3	0000100010001001	1	0100010010000100	3
185	0000100000100001	1	0000100000100001	1	1001000000100000	2	1001000000100000	2
186	0000010010010001	1	0000010010010001	1	1000100100001000	2	1000100100001000	2
187	0000010000100010	1	0000010000100010	1	1000100010000100	2	1000100010000100	2
188	0000010001001001	1	0100100001000001	1	0000010001001001	1	0100100001000001	1

© ISO/IEC 2006 – All rights reserved

Copyright International Organization for Standardization
Provided by IHS under license with ISO
No reproduction or networking permitted without license from IHS
Not for Resale

Table G.1 — Main Conversion Table (*continued*)

8-bit	State 1		State 2		State 3		State 4	
byte	Code Word msb lsb	Next State	Code Word msb lsb	Next State	Code Word msb lsb	Next State	Code Word msb lsb	Next State
189	0000010000010001	1	0000010000010001	1	1000100000010000	2	1000100000010000	2
190	0000001001001000	2	0100010010000100	2	1000010010001000	2	0100010010000100	2
191	0000001000100100	2	0100010000010000	2	1000010001000100	2	0100010000010000	2
192	0000001000000100	2	0100001001000100	2	1000010000001000	2	0100001001000100	2
193	0010010010001000	2	0100010000010000	3	0010010010001000	2	0100010000010000	3
194	0010010001000100	2	0010010001000100	2	1000001001001000	2	1000001001001000	2
195	0010010000001000	2	0100010010010010	1	0010010000001000	2	0100010010010010	1
196	0010001000100100	2	0010001000100100	2	1000001000100100	2	1000001000100100	2
197	0010001000000100	2	0010001000000100	2	1000001000000100	2	1000001000000100	2
198	0010001001001000	2	0100010001000010	1	0010001001001000	2	0100010001000010	1
199	0001001001000100	2	0001001001000100	2	0100001000001000	2	0100001000001000	2
200	0001000100100100	2	0001000100100100	2	1001000000100000	3	1001000000100000	3
201	0001000100000100	2	0001000100000100	2	1000100100001000	3	1000100100001000	3
202	0001001000001000	2	0100010000100001	1	0001001000001000	2	0100010000100001	1
203	0001000000100000	2	0001000000100000	2	1000100010000100	3	1000100010000100	3
204	0000100010000100	2	0000100010000100	2	1000010010001000	3	1000010010001000	3
205	0000100000010000	2	0000100000010000	2	1000010001000100	3	1000010001000100	3
206	0000100100001000	2	0100001000100010	1	0000100100001000	2	0100001000100010	1
207	0000010010001000	2	0100001000010001	1	0000010010001000	2	0100001000010001	1
208	0000010001000100	2	0000010001000100	2	1000001000100100	3	1000001000100100	3
209	0000010000001000	2	0100000100010010	1	0000010000001000	2	0100000100010010	1
210	0000001000000100	3	0100000010000010	1	1000010000001000	3	0100000010000010	1
211	0000001000100100	3	0100000100100100	2	1000001001001000	3	0100000100100100	2
212	0000001001001000	3	0100000100000100	2	1000001000000100	3	0100000100000100	2
213	0000010000001000	3	0100000001000001	1	0000010000001000	3	0100000001000001	1
214	0000010001000100	3	0000010001000100	3	0100001000001000	3	0100001000001000	3
215	0000010010001000	3	0100000000100000	2	0000010010001000	3	0100000000100000	2
216	0000100000010000	3	0000100000010000	3	1001001000010000	3	1001001000010000	3
217	0000100010000100	3	0000100010000100	3	1001000100000100	3	1001000100000100	3
218	0000100100001000	3	0100000100000100	3	0000100100001000	3	0100000100000100	3
219	0001000000100000	3	0001000000100000	3	0100000100001001	1	0100000100001001	1
220	0001000100000100	3	0001000100000100	3	1001001000010000	2	1001001000010000	2
221	0001000100100100	3	0001000100100100	3	1001000100001000	2	1001000100001000	2
222	0001001000001000	3	0100000100100100	3	0001001000001000	3	0100000100100100	3
223	0001001001000100	3	0001001001000100	3	1001001000001000	3	1001001000001000	3
224	0010001000000100	3	0010001000000100	3	1000100000010000	3	1000100000010000	3
225	0010001000100100	3	0010001000100100	3	1001001001000010	1	1001001001000010	1
226	0010001001001000	3	0100001001000100	3	0010001001001000	3	0100001001000100	3
227	0010010000001000	3	0100100100000100	3	0010010000001000	3	0100100100000100	3
228	0010010001000100	3	0010010001000100	3	1001000100001000	3	1001000100001000	3
229	0010010010001000	3	0100000000100000	3	0010010010001000	3	0100000000100000	3
230	0010000001000000	4	0010000001000000	4	1001001000100001	1	1001001000100001	1
231	0000001001001001	1	0100100100100010	1	1001000100100010	1	0100100100100010	1
232	0000001000100010	1	0100100010000100	2	1001000100010001	1	0100100010000100	2
233	0000001000010001	1	0100100000010000	2	1001000010010010	1	0100100000010000	2
234	0000000100010010	1	0100000001000000	4	1001000010001001	1	0100000001000000	4
235	0000000100001001	1	0100100100010001	1	1001000001000010	1	0100100100010001	1

Copyright International Organization for Standardization
Provided by IHS under license with ISO
No reproduction or networking permitted without license from IHS
Not for Resale
© ISO/IEC 2006 – All rights reserved

Table G.1 — Main Conversion Table (*concluded*)

8-bit byte	State 1		State 2		State 3		State 4	
	Code Word msb lsb	Next State	Code Word msb lsb	Next State	Code Word msb lsb	Next State	Code Word msb lsb	Next State
236	0000000010000010	1	0100100010010010	1	1001000000100001	1	0100100010010010	1
237	0000000001000001	1	0100100001000010	1	1000100100100001	1	0100100001000010	1
238	0010010000010010	1	0010010000010010	1	1000100010010001	1	1000100010010001	1
239	0010001000000010	1	0010001000000010	1	1001000010000100	3	1001000010000100	3
240	0010010000001001	1	0100100010000100	3	0010010000001001	1	0100100010000100	3
241	0010000100000001	1	0010000100000001	1	1001000010000100	2	1001000010000100	2
242	0001001000010010	1	0001001000010010	1	1000000010000000	4	1000000010000000	4
243	0001000100000010	1	0001000100000010	1	1000100001001001	1	1000100001001001	1
244	0001001000001001	1	0100100000100001	1	0001001000001001	1	0100100000100001	1
245	0001000010000001	1	0001000010000001	1	1000100000100010	1	1000100000100010	1
246	0000100100010010	1	0000100100010010	1	1000100000010001	1	1000100000010001	1
247	0000100010000010	1	0000100010000010	1	1000010000010010	1	1000010000010010	1
248	0000100100001001	1	0100010010010001	1	0000100100001001	1	0100010010010001	1
249	0000100001000001	1	0000100001000001	1	1000010000001001	1	1000010000001001	1
250	0000010010010010	1	0000010010010010	1	1000001000000010	1	1000001000000010	1
251	0000010001000010	1	0000010001000010	1	1000000100000001	1	1000000100000001	1
252	0000010010001001	1	0100010000100010	1	0000010010001001	1	0100010000100010	1
253	0000010000100001	1	0000010000100001	1	0100100010001001	1	0100100010001001	1
254	0000001001000100	2	0100010000010001	1	1001000000010000	2	0100010000010001	1
255	0000001000001000	2	0100001000010010	1	1000100100010000	2	0100001000010010	1

© ISO/IEC 2006 All rights reserved

Copyright International Organization for Standardization
Provided by IHS under license with ISO
No reproduction or networking permitted without license from IHS
Not for Resale

Table G.2 — Substitution table

8-bit byte	State 1		State 2		State 3		State 4	
	Code Word msb lsb	Next State	Code Word msb lsb	Next State	Code Word msb lsb	Next State	Code Word msb lsb	Next State
0	0000010010000000	4	0000010010000000	4	0100100001001000	2	0100100001001000	2
1	0000100100000000	4	0000100100000000	4	0100100001001000	3	0100100001001000	3
2	0001001000000000	4	0001001000000000	4	0100100000001001	1	0100100000001001	1
3	0000001001000000	4	0100010000000001	1	1000001000000000	4	0100010000000001	1
4	0000000100100000	3	0100100000000010	1	1001000000000100	3	0100100000000010	1
5	0000000010010000	3	0100001000000000	4	1001000000100100	3	0100001000000000	4
6	0000000001001000	3	0100100000000100	2	1001000001001000	3	0100100000000100	2
7	0000000001001000	2	0100000100000000	4	1001000000000100	2	0100000100000000	4
8	0000000010010000	2	0100100010010000	3	1001000000100100	2	0100100010010000	3
9	0000000100100000	2	0100100000100100	2	1001000001001000	2	0100100000100100	2
10	0000010001000000	4	0000010001000000	4	1001001001000000	4	1001001001000000	4
11	0000100010000000	4	0000100010000000	4	1000100001001000	3	1000100001001000	3
12	0001000100000000	4	0001000100000000	4	0100010001001000	3	0100010001001000	3
13	0010001000000000	4	0010001000000000	4	1000100000000100	3	1000100000000100	3
14	0000001000100000	3	0100100000000100	3	1001000010010000	3	0100100000000100	3
15	0000000100010000	3	0100100010010000	2	1001000100100000	3	0100100010010000	2
16	0000000010001000	3	0100001000000001	1	0100100000001000	3	0100001000000001	1
17	0000000001000100	3	0100010000000010	1	0100100010001000	3	0100010000000010	1
18	0000000001000100	2	0100100000100100	3	1001000010010000	2	0100100000100100	3
19	0000000010001000	2	0100100100100000	3	1001000100100000	2	0100100100100000	3
20	0000000100010000	2	0100100100100000	2	0100010001001000	2	0100100100100000	2
21	0000001000100000	2	0100100000010010	1	0100100000001000	2	0100100000010010	1
22	0000010010000001	1	0000010010000001	1	1000100000100100	3	1000100000100100	3
23	0000100100000001	1	0000100100000001	1	1000100010010000	3	1000100010010000	3
24	0001001000000001	1	0001001000000001	1	0100100010001000	2	0100100010001000	2
25	0010010000000001	1	0010010000000001	1	1000100000000100	2	1000100000000100	2
26	0000000001001001	1	0100010000000100	3	1000010000000001	1	0100010000000100	3
27	0000000010010001	1	0100000100000001	1	1000100000000010	1	0100000100000001	1
28	0000000100100001	1	0100010000000100	2	1001000000001001	1	0100010000000100	2
29	0000001001000001	1	0100001000000010	1	1001000000010010	1	0100001000000010	1
30	0000100001000000	4	0000100001000000	4	1000100000100100	2	1000100000100100	2
31	0001000010000000	4	0001000010000000	4	1000100001001000	2	1000100001001000	2
32	0010000100000000	4	0010000100000000	4	0100010000001001	1	0100010000001001	1
33	0000010000100000	3	0000010000100000	3	0100100001001001	1	0100100001001001	1
34	0000001000010000	3	0100010000010010	1	1000100100100000	3	0100010000010010	1
35	0000000100001000	3	0100100000010001	1	1001000000001000	3	0100100000010001	1
36	0000000010000100	3	0100000010000000	4	1001000001000100	3	0100000010000000	4
37	0000010000100000	2	0000010000100000	2	1000001000000001	1	1000001000000001	1
38	0000000010000100	2	0100010000100100	3	1000100010010000	2	0100010000100100	3
39	0000000100001000	2	0100010000100100	2	1000100100100000	2	0100010000100100	2
40	0000001000010000	2	0100100000100010	1	1001000000001000	2	0100100000100010	1
41	0000010001000001	1	0000010001000001	1	1000010000000010	1	1000010000000010	1
42	0000010010000010	1	0000010010000010	1	1000000100000000	4	1000000100000000	4
43	0000100010000001	1	0000100010000001	1	1001000001000100	2	1001000001000100	2
44	0000100100000010	1	0000100100000010	1	1000100000001001	1	1000100000001001	1
45	0001000100000001	1	0001000100000001	1	1001000010001000	3	1001000010001000	3
46	0001001000000010	1	0001001000000010	1	1001000100010000	3	1001000100010000	3

© ISO/IEC 2006 – All rights reserved
Copyright International Organization for Standardization
Provided by IHS under license with ISO
No reproduction or networking permitted without license from IHS
Not for Resale

Table G.2 — Substitution table (*concluded*)

8-bit byte	State 1		State 2		State 3		State 4	
	Code Word msb lsb	Next State	Code Word msb lsb	Next State	Code Word msb lsb	Next State	Code Word msb lsb	Next State
47	0010001000000001	1	0010001000000001	1	1000100000010010	1	1000100000010010	1
48	0010010000000010	1	0010010000000010	1	0100010000001000	3	0100010000001000	3
49	0000000001000010	1	0100100010010001	1	1001000000010001	1	0100100010010001	1
50	0000000010001001	1	0100100001000100	3	1001000000100010	1	0100100001000100	3
51	0000000010010010	1	0100010010010000	3	1001000001001001	1	0100010010010000	3
52	0000000100010001	1	0100010010010000	2	1001000010010001	1	0100010010010000	2
53	0000000100100010	1	0100100001000100	2	1001000100100001	1	0100100001000100	2
54	0000001000100001	1	0100100100100001	1	1001001001000001	1	0100100100100001	1
55	0000001001000010	1	0100100100010000	3	0100001000001001	1	0100100100010000	3
56	0001000001000000	4	0001000001000000	4	1001001000100000	3	1001001000100000	3
57	0010000010000000	4	0010000010000000	4	1001000010001000	2	1001000010001000	2
58	0010010010010000	3	0010010010010000	3	1001000100010000	2	1001000100010000	2
59	0010010001001000	3	0100100100010000	2	0010010001001000	3	0100100100010000	2
60	0010010000100100	3	0010010000100100	3	1001001000100000	2	1001001000100000	2
61	0010010000000100	3	0010010000000100	3	0100001001001000	2	0100001001001000	2
62	0001001001001000	3	0100000010000001	1	0001001001001000	3	0100000010000001	1
63	0001001000100100	3	0001001000100100	3	0100001001001000	3	0100001001001000	3
64	0001001000000100	3	0001001000000100	3	0100010010001000	3	0100010010001000	3
65	0000100100100100	3	0000100100100100	3	0100100100001000	3	0100100100001000	3
66	0000100100000100	3	0000100100000100	3	1000010000000100	3	1000010000000100	3
67	0000100000100000	3	0000100000100000	3	1000010000100100	3	1000010000100100	3
68	0000010010000100	3	0000010010000100	3	1000010001001000	3	1000010001001000	3
69	0000010000010000	3	0000010000010000	3	1000010010010000	3	1000010010010000	3
70	0000001001000100	3	0100001000000100	2	1000100000001000	3	0100001000000100	2
71	0000001000001000	3	0100100000010000	3	1000100010001000	3	0100100000010000	3
72	0000000100100100	3	0100010001000100	3	1000100100010000	3	0100010001000100	3
73	0000000100000100	3	0100001000100100	3	1001000000010000	3	0100001000100100	3
74	0000010000010000	2	0000010000010000	2	1000100001000100	3	1000100001000100	3
75	0001001001001000	2	0100001000000100	3	0001001001001000	2	0100001000000100	3
76	0000010010000100	2	0000010010000100	2	0100010000001000	2	0100010000001000	2
77	0000100000100000	2	0000100000100000	2	0100010010001000	2	0100010010001000	2
78	0010010001001000	2	0100000100000010	1	0010010001001000	2	0100000100000010	1
79	0000100100000100	2	0000100100000100	2	0100100100001000	2	0100100100001000	2
80	0000100100100100	2	0000100100100100	2	1000010000000100	2	1000010000000100	2
81	0001001000000100	2	0001001000000100	2	1000010000100100	2	1000010000100100	2
82	0001001000100100	2	0001001000100100	2	1000010001001000	2	1000010001001000	2
83	0010010000000100	2	0010010000000100	2	1000010010010000	2	1000010010010000	2
84	0010010000100100	2	0010010000100100	2	1000100000001000	2	1000100000001000	2
85	0010010010010000	2	0010010010010000	2	0100010001001001	1	0100010001001001	1
86	0000000100000100	2	0100001000100100	2	1000100001000100	2	0100001000100100	2
87	0000000100100100	2	0100010001000100	2	1000100010001000	2	0100010001000100	2

© ISO/IEC 2006 – All rights reserved

Copyright International Organization for Standardization
Provided by IHS under license with ISO
No reproduction or networking permitted without license from IHS
Not for Resale

Annex H
(informative)

Transportation

H.1 General

As transportation occurs under a wide range of temperature and humidity variations, for differing periods, by many methods of transport and in all parts of the world, it is not possible to specify mandatory conditions for transportation or for packaging.

H.2 Packaging

The form of packaging should be agreed between sender and recipient or, in absence of such an agreement, is the responsibility of the sender. It should take into account the following hazards.

H.2.1 Temperature and humidity

Insulation and wrapping should be designed to maintain the conditions for storage over the estimated period of transportation.

H.2.2 Impact loads and vibrations

Avoid mechanical loads that would distort the shape of the disk.

Avoid dropping the disk.

Disks should be packed in a rigid box containing adequate shock-absorbent material.

The final box should have a clean interior and a construction that provides sealing to prevent the ingress of dirt and moisture.

© ISO/IEC 2006 – All rights reserved
Copyright International Organization for Standardization
Provided by IHS under license with ISO
No reproduction or networking permitted without license from IHS
Not for Resale

Annex I
(informative)

Measurement of the thickness of the spacer of Dual Layer disks

This annex indicates two convenient methods for measuring the thickness of the spacer which is the layer of transparent material between Layer 0 and Layer 1 of Dual Layer disks.

I.1 Laser focusing method

Laser is focused sequentially on each recorded layer by means of an objective lens. The distance by which the lens must be moved equals the thickness of the spacer. As an example, Figure I.1 shows schematically an implementation of a Type B disk.

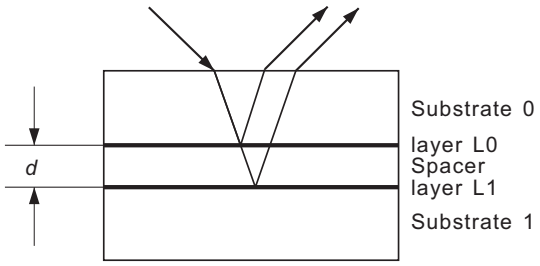

Figure I.1 — Measurement of the thickness of the spacer

I.2 Interferometer method

Light with varying wavelength is used with a Dual Layer disk. See Figure I.2. The thickness *d* of the spacer of known index of refraction *n* is determined by measuring the phase difference between the reflected light from Layer 0 and from Layer 1. The thickness is obtained from the relation

$$d = \frac{\lambda_1 \times \lambda_2}{2n(\lambda_2 - \lambda_1)}$$

where n is the index of refraction of the spacer.

--`,,```,,,,````-`-`,,`,,`,`,,`---
© ISO/IEC 2006 – All rights reserved
Copyright International Organization for Standardization
Provided by IHS under license with ISO
No reproduction or networking permitted without license from IHS
Not for Resale

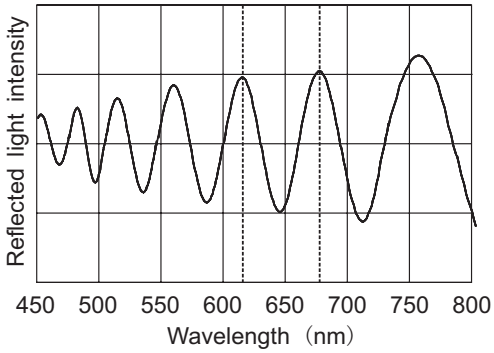

Figure I.2 — Reflected light intensity

© ISO/IEC 2006 – All rights reserved
Copyright International Organization for Standardization
Provided by IHS under license with ISO
No reproduction or networking permitted without license from IHS
Not for Resale

Copyright International Organization for Standardization
Provided by IHS under license with ISO
No reproduction or networking permitted without license from IHS
Not for Resale

ICS 35.220.30

Price based on 84 pages

© ISO/IEC 2006 – All rights reserved
Copyright International Organization for Standardization
Provided by IHS under license with ISO
No reproduction or networking permitted without license from IHS
Not for Resale