# INTERNATIONAL STANDARD

# ISO/IEC 24702

First edition
2006-10

## Information technology – Generic cabling – Industrial premises



Reference number
ISO/IEC 24702:2006(E)

Copyright International Organization for Standardization
Provided by IHS under license with ISO
No reproduction or networking permitted without license from IHS

Not for Resale

--`,,```,,,,````-`-`,,`,,`,`,,`---

Copyright International Organization for Standardization
Provided by IHS under license with ISO
No reproduction or networking permitted without license from IHS

Not for Resale

# INTERNATIONAL STANDARD

# ISO/IEC 24702

First edition
2006-10

## Information technology – Generic cabling – Industrial premises

Copyright © 2006 ISO/IEC, Geneva — All rights reserved

No part of this publication may be reproduced or utilized in any form or by any means, electronic or mechanical, including photocopying and microfilm, without permission in writing from the publisher.

International Electrotechnical Commission, 3, rue de Varembé, PO Box 131, CH-1211 Geneva 20, Switzerland
Telephone: +41 22 919 02 11 Telefax: +41 22 919 03 00 E-mail: inmail@iec.ch Web: www.iec.ch




PRICE CODE W

*For price, see current catalogue*

Copyright International Organization for Standardization
Provided by IHS under license with ISO
No reproduction or networking permitted without license from IHS
Not for Resale

# CONTENTS

FOREWORD ..... 7
INTRODUCTION ..... 8
1 Scope ..... 10
2 Normative references ..... 10
3 Definitions and abbreviations ..... 13
3.1 Definitions ..... 13
3.2 Abbreviations ..... 15
4 Conformance ..... 15
5 Structure ..... 16
5.1 General ..... 16
5.2 Functional elements ..... 16
5.3 Cabling subsystem ..... 17
5.3.1 General structure ..... 17
5.3.2 Campus backbone cabling subsystem ..... 18
5.3.3 Building backbone cabling subsystem ..... 18
5.3.4 Floor cabling subsystem ..... 18
5.3.5 Intermediate cabling subsystem ..... 19
5.3.6 Centralized cabling architecture ..... 19
5.3.7 Design objectives ..... 19
5.4 Interconnection of subsystems ..... 20
5.5 Accommodation of functional elements ..... 21
5.6 Interfaces ..... 22
5.6.1 Equipment interfaces and test interfaces ..... 22
5.6.2 Channels and permanent links ..... 22
5.6.3 External network interface ..... 22
5.7 Dimensioning and configuring ..... 22
5.7.1 General ..... 22
5.7.2 Distributors ..... 23
5.7.3 Cables ..... 23
5.7.4 Apparatus attachment and equipment cords ..... 23
5.7.5 Patch cords and jumpers ..... 23
5.7.6 TO ..... 23
5.7.7 Telecommunications rooms and equipment rooms ..... 24
5.7.8 Industrial enclosures ..... 24
5.7.9 Building entrance facilities ..... 24
6 Channel performance ..... 24
6.1 General ..... 24
6.2 Environmental performance ..... 26
6.2.1 General ..... 26
6.2.2 Environmental classification ..... 26
6.3 Transmission performance ..... 28
6.3.1 General ..... 28
6.3.2 Balanced cabling ..... 29
6.3.3 Optical fibre cabling ..... 33

Copyright International Organization for Standardization
Provided by IHS under license with ISO
No reproduction or networking permitted without license from IHS Not for Resale

7 Reference implementations ..... 34
7.1 General ..... 34
7.2 Balanced cabling ..... 35
7.2.1 General ..... 35
7.2.2 Intermediate cabling ..... 35
7.2.3 Backbone cabling ..... 35
7.3 Optical fibre cabling ..... 35
7.3.1 General ..... 35
7.3.2 Component choice ..... 35
7.3.3 Maximum channel lengths ..... 35
8 Cable requirements ..... 36
8.1 Introduction ..... 36
8.2 Operating environment ..... 36
8.3 Balanced cables ..... 37
8.4 Optical fibre cables ..... 37
8.4.1 All-silica optical fibre cables ..... 37
8.4.2 Plastic optical fibre cables ..... 38
8.4.3 Plastic clad silica optical fibre cables ..... 39
8.4.4 Propagation delay ..... 39
9 Connecting hardware requirements ..... 39
9.1 Introduction ..... 39
9.2 General requirements ..... 40
9.2.1 Location ..... 40
9.2.2 Design ..... 40
9.2.3 Mounting ..... 40
9.2.4 Marking and colour coding ..... 41
9.3 Operating environment ..... 41
9.4 Connecting hardware for balanced cabling ..... 41
9.4.1 General requirements ..... 41
9.4.2 Performance marking ..... 41
9.4.3 Operating environment ..... 41
9.4.4 Mechanical and electrical characteristics of balanced connecting hardware ..... 42
9.5 Connecting hardware for optical fibres ..... 44
9.5.1 Operating environment ..... 44
9.5.2 Connecting hardware for all-silica optical fibres ..... 45
9.5.3 Connecting hardware for plastic optical fibres ..... 45
9.5.4 Connecting hardware for plastic clad silica fibres ..... 46
10 Cords ..... 47
10.1 General ..... 47
10.2 Operating environment ..... 47
10.3 Balanced cords ..... 47
10.3.1 General ..... 47
10.3.2 Cable insertion loss ..... 48
10.3.3 Identification ..... 48
10.3.4 Operating environment ..... 48
10.3.5 Electrical performance requirements for patch cords ..... 49

Copyright International Organization for Standardization
Provided by IHS under license with ISO
No reproduction or networking permitted without license from IHS Not for Resale

10.4 Optical fibre cords ..... 49
10.4.1 General ..... 49
10.4.2 Identification ..... 50
10.4.3 Performance requirements for patch cords ..... 50
10.4.4 Operating environment ..... 50
Annex A (normative) Permanent link performance limits ..... 52
A.1 General ..... 52
A.2 Balanced cabling ..... 52
A.2.1 General ..... 52
A.2.2 Additional requirements ..... 53
A.2.3 Optical fibre cabling ..... 54
Annex B (normative) Test methods ..... 55
B.1 General ..... 55
B.1.1 Visual inspection ..... 55
B.1.2 Measurements ..... 55
B.2 Test parameters for balanced cabling ..... 60
B.2.1 General ..... 60
B.2.2 Wire map ..... 60
B.2.3 Length ..... 60
B.2.4 Propagation delay ..... 60
B.2.5 Delay skew ..... 61
B.2.6 Attenuation (insertion loss) ..... 61
B.2.7 Near end crosstalk loss (NEXT, pair-to-pair and power sum) ..... 61
B.2.8 Equal level far end crosstalk loss (ELFEXT, pair-to-pair and power sum) ..... 61
B.2.9 Attenuation to crosstalk ratio (ACR, pair-to-pair and power sum) ..... 61
B.2.10 Return loss ..... 61
B.2.11 Coupling attenuation ..... 61
B.2.12 Direct current (d.c.) loop resistance ..... 62
B.3 Test parameters for optical fibre cabling ..... 62
B.3.1 General ..... 62
B.3.2 All-silica optical fibre ..... 62
B.3.3 Plastic optical fibre ..... 62
B.3.4 Plastic clad silica optical fibre ..... 62
Annex C (normative) Reference implementations (not conforming to clause 5) ..... 63
C.1 Introduction ..... 63
C.2 Connection-less channels ..... 63
C.2.1 General ..... 63
C.2.2 Channels with no connections ..... 63
C.2.3 Channels with inter-connections ..... 64
C.3 Channels using balanced cabling bulkhead connections ..... 65
Annex D (informative) Reference implementations ..... 68
D.1 Introduction ..... 68
D.2 Channels using balanced cabling bulkhead connections with additional connections ..... 68

--`,,```,,,,````-`-`,,`,,`,`,,`---

Copyright International Organization for Standardization
Provided by IHS under license with ISO
No reproduction or networking permitted without license from IHS Not for Resale

Annex E (informative) Supported applications ..... 71
E.1 Supported applications for balanced cabling ..... 71
E.2 Supported applications for optical fibre cabling ..... 71
Annex F (informative) Introduction to environmental classification in clause 6 ..... 73
F.1 General ..... 73
F.2 Application of environmental classification ..... 73
F.2.1 MICE ..... 73
F.2.2 Channel environment ..... 73
F.2.3 Component selection ..... 74
F.3 The MICE system ..... 75
F.4 Guidance with respect to environmental classification ..... 79
Bibliography ..... 83

Figure 1 – Cabling specified by ISO/IEC 24702 and its relationship to OSI reference model layers ..... 9
Figure 2 – Configuration of apparatus-based functional elements within industrial premises ..... 17
Figure 3 – Structure of generic cabling for industrial environment ..... 18
Figure 4 – Hierarchical structure of generic cabling for industrial premises ..... 20
Figure 5 – Inter-relationship of functional elements in an installation with diversity for protection against failure ..... 20
Figure 6 – Accommodation of functional elements ..... 21
Figure 7 – Test and equipment interfaces ..... 22
Figure 8 – Transmission performance of a channel ..... 25
Figure 9 – Example of a system showing the location of cabling interfaces and extent of associated channels ..... 25
Figure 10 – Eight position jack pin and pair grouping assignments (front view of connector) ..... 43
Figure 11 – Four position jack pin and pair grouping assignments (front view of connector) ..... 44
Figure A.1 – Permanent link options ..... 52
Figure B.1 – Reference planes for link and channels (point-to-point) ..... 56
Figure B.2 – The test system and the cabling under test ..... 57
Figure C.1 – Balanced cabling channel configurations with no connections ..... 64
Figure C.2 – Balanced cabling channel configurations of Figure C.1 with interconnection at distributor ..... 65
Figure C.3 – Balanced cabling channel configurations with bulkhead connections ..... 66
Figure D.1 – Channel configurations ..... 69
Figure F.1 – Example of variation of the environment along a cabling channel ..... 74
Figure F.2 – The local environment ..... 74
Figure F.3 – Noise ranges of common industrial machine devices ..... 80
Figure F.4 – Guidance on separation of cabling from noise sources ..... 82

Table 1 – Channel environments ..... 26
Table 2 – Details of environmental classification ..... 27

Copyright International Organization for Standardization
Provided by IHS under license with ISO
No reproduction or networking permitted without license from IHS Not for Resale

Table 3 – Formulae for TCL limits for an unscreened cabling channel ..... 30
Table 4 – Informative TCL limits for an unscreened cabling channel at key frequencies ..... 30
Table 5 – Formulæ for ELTCTL limits for an unscreened cabling channel ..... 31
Table 6 – Informative ELTCTL limits for an unscreened cabling channel at key frequencies ..... 31
Table 7 – Formulæ for coupling attenuation limits for a screened cabling channel ..... 32
Table 8 – Informative coupling attenuation limits for a screened cabling channel at key frequencies ..... 32
Table 9 – Channel attenuation of optical fibre cabling channels ..... 34
Table 10 – Optical fibre channel length equivalence for connecting hardware ..... 36
Table 11 – Environmental performance specifications for balanced cables (in addition to IEC 61156-5-1 and IEC 61156-6-1) ..... 37
Table 12 – Singlemode optical fibre cable (Category OS2) performance requirements ..... 38
Table 13 – Environmental performance specifications for optical fibre cables (in addition to IEC 60794-2 and IEC 60794-3) ..... 38
Table 14 – Optical fibre cable performance requirements ..... 39
Table 15 – Environmental performance specifications for balanced cabling connecting hardware ..... 42
Table 16 – Environmental performance specifications for optical fibre cabling connecting hardware ..... 44
Table 17 – Environmental performance specifications for balanced cords (in addition to IEC/PAS 61935-2-20)[a)] ..... 49
Table 18 – Environmental performance specifications for optical fibre cords (in addition to IEC 61753-X) ..... 51
Table B.1 – Level of accuracy for balanced cabling tester ..... 58
Table B.2 – Cabling characteristics of balanced cabling for acceptance, compliance, and reference testing ..... 60
Table B.3 – Cabling characteristics of optical fibre cabling for acceptance, compliance, and reference testing ..... 62
Table C.1 – Channel equations for balanced cabling ..... 65
Table C.2 – Channel equations for bulkhead connections ..... 67
Table D.1 – Channel equations ..... 70
Table E.1 – Supported applications and maximum channel lengths with all-silica multimode optical fibres ..... 71
Table E.2 – Supported applications and maximum channel lengths with all-silica singlemode optical fibres ..... 72
Table E.3 – Supported applications and maximum channel lengths with plastic optical fibres ..... 72
Table F.1 – Derivation of boundaries for mechanical criteria in Table 2 ..... 75
Table F.2 – Derivation of boundaries for ingress protection criteria in Table 2 ..... 75
Table F.3 – Derivation of boundaries for climatic criteria in Table 2 ..... 76
Table F.4 – Derivation of boundaries for chemical criteria in Table 2 ..... 77
Table F.5 – Derivation of boundaries for electromagnetic criteria in Table 2 ..... 79
Table F.6 – Guidance for the classification of electromagnetic environments ..... 81
Table F.7 – Coupling mechanisms for common noise sources ..... 82

Copyright International Organization for Standardization
Provided by IHS under license with ISO
No reproduction or networking permitted without license from IHS Not for Resale

# INFORMATION TECHNOLOGY – GENERIC CABLING – INDUSTRIAL PREMISES

## FOREWORD

1) ISO (International Organization for Standardization) and IEC (International Electrotechnical Commission) form the specialized system for worldwide standardization. National bodies that are members of ISO or IEC participate in the development of International Standards. Their preparation is entrusted to technical committees; any ISO and IEC member body interested in the subject dealt with may participate in this preparatory work. International governmental and non-governmental organizations liaising with ISO and IEC also participate in this preparation.

2) In the field of information technology, ISO and IEC have established a joint technical committee, ISO/IEC JTC 1. Draft International Standards adopted by the joint technical committee are circulated to national bodies for voting. Publication as an International Standard requires approval by at least 75 % of the national bodies casting a vote.

3) The formal decisions or agreements of IEC and ISO on technical matters express, as nearly as possible, an international consensus of opinion on the relevant subjects since each technical committee has representation from all interested IEC and ISO member bodies.

4) IEC, ISO and ISO/IEC Publications have the form of recommendations for international use and are accepted by IEC and ISO member bodies in that sense. While all reasonable efforts are made to ensure that the technical content of IEC, ISO and ISO/IEC Publications is accurate, IEC or ISO cannot be held responsible for the way in which they are used or for any misinterpretation by any end user.

5) In order to promote international uniformity, IEC and ISO member bodies undertake to apply IEC, ISO and ISO/IEC Publications transparently to the maximum extent possible in their national and regional publications. Any divergence between any ISO/IEC Publication and the corresponding national or regional publication should be clearly indicated in the latter.

6) ISO and IEC provide no marking procedure to indicate their approval and cannot be rendered responsible for any equipment declared to be in conformity with an ISO/IEC Publication.

7) All users should ensure that they have the latest edition of this publication.

8) No liability shall attach to IEC or ISO or its directors, employees, servants or agents including individual experts and members of their technical committees and IEC or ISO member bodies for any personal injury, property damage or other damage of any nature whatsoever, whether direct or indirect, or for costs (including legal fees) and expenses arising out of the publication of, use of, or reliance upon, this ISO/IEC publication or any other IEC, ISO or ISO/IEC publications.

9) Attention is drawn to the normative references cited in this publication. Use of the referenced publications is indispensable for the correct application of this publication.

10) Attention is drawn to the possibility that some of the elements of this International Standard may be the subject of patent rights. ISO and IEC shall not be held responsible for identifying any or all such patent rights.

International Standard ISO/IEC 24702 was prepared by subcommittee 25: Interconnection of information technology equipment, of ISO/IEC joint technical committee 1: Information technology.

ISO/IEC 24702 should be read in conjunction with International Standard ISO/IEC 11801.

This International Standard has been approved by vote of the member bodies, and the voting results may be obtained from the address given on the title page.

This publication has been drafted in accordance with the ISO/IEC Directives, Part 2.

Copyright International Organization for Standardization
Provided by IHS under license with ISO
No reproduction or networking permitted without license from IHS Not for Resale

# INTRODUCTION

Within premises, the importance of the information technology cabling infrastructure is similar to that of other fundamental building utilities such as heating, lighting and mains power. As with other utilities, interruptions to service can have serious impact. Poor quality of service due to lack of design foresight, use of inappropriate components, incorrect installation, poor administration or inadequate support can threaten an organization's effectiveness.

Historically, the cabling within premises comprised both application-specific and multipurpose networks. The subsequent growth of generic cabling designed in accordance with ISO/IEC 11801 has supported the development of high-data-rate applications based upon a defined cabling model.

This International Standard recognizes the benefit of generic cabling to interconnect several pieces of apparatus within industrial premises or industrial areas within other types of premises (within and between structures and buildings) and should be read in conjunction with ISO/IEC 11801.

This International Standard provides, for industrial premises:

a) users with an application-independent generic cabling system and an open market for cabling components;

b) requirements for infrastructures that support critical automation, process control and monitoring applications in a range of industrial environments;

c) users with a flexible cabling scheme such that modifications are both easy and economical;

d) building professionals, production and control engineers with guidance allowing the accommodation of cabling:

   — before specific requirements are known; i.e. in the initial planning either for construction or refurbishment;

   — by further deployment as the requirements of specific industrial areas are defined;

e) industry and standardisation bodies with a cabling system which supports current products and provides a basis for future product development and applications standardisation.

This International Standard specifies multi-vendor cabling, and is related to

- the associated standard for generic cabling within commercial premises (ISO/IEC 11801),
- standards for cabling components developed by Technical Committees of ISO and IEC,
- standards for the quality assurance and installation of information technology cabling (series ISO/IEC 14763 and IEC 61918) and testing of installed cabling (IEC 61935-1),
- applications developed by the technical committees of IEC, subcommittees of ISO/IEC JTC 1 and study groups of ITU-T (for example Fieldbus, LANs and ISDN).

Within this International standard the cabling, defined between the interfaces shown in Figure 1, contains passive components only.

--`,,```,,,,````-`-`,,`,,`,`,,`---

Copyright International Organization for Standardization
Provided by IHS under license with ISO
No reproduction or networking permitted without license from IHS Not for Resale

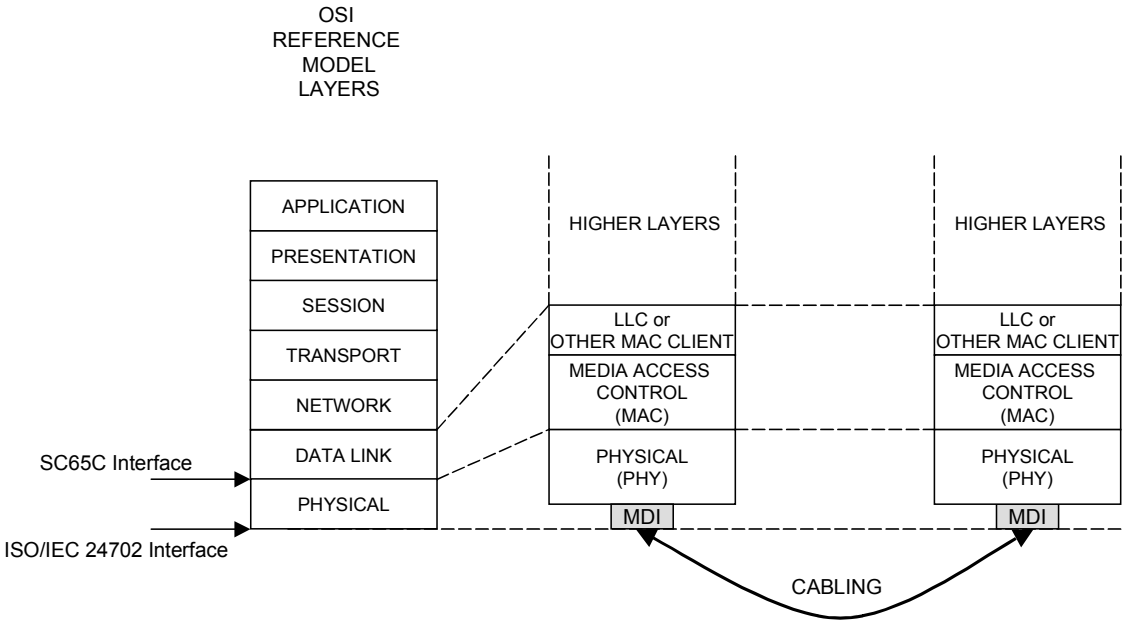


**Figure 1 – Cabling specified by ISO/IEC 24702 and its relationship to OSI reference model layers**

It is anticipated that the generic cabling system meeting the minimum requirements of this International Standard will have a life expectancy consistent with other infrastructures within industrial premises.

--`,,```,,,,````-`-`,,`,,`,`,,`---

Copyright International Organization for Standardization
Provided by IHS under license with ISO
No reproduction or networking permitted without license from IHS
Not for Resale

# INFORMATION TECHNOLOGY
# GENERIC CABLING – INDUSTRIAL PREMISES

## 1 Scope

This International Standard specifies generic cabling that supports a wide range of communications services including automation, process control and monitoring applications for use within industrial premises or industrial areas within other types of premises, comprising single or multiple buildings on a campus. It covers balanced cabling and optical fibre cabling.

This standard is based upon and references the requirements of ISO/IEC 11801. It contains additional requirements that are appropriate to industrial premises in which the maximum distance over which communications services have to be distributed is 10 000 m. The principles of this International Standard may also be applied to installations that do not fall within this range.

In addition to the requirements of ISO/IEC 11801, this International Standard specifies

a) a modified structure and configuration for generic cabling within industrial premises in which information technology applications are used to support process monitoring and control functions,

b) implementation options,

c) additional requirements that reflect the range of operating environments within industrial premises.

Safety (electrical safety and protection, fire, etc.) and electromagnetic compatibility (EMC) requirements are outside the scope of this International Standard and are covered by other standards and regulations. However, information given in this document may be of assistance in meeting these standards and regulations.

## 2 Normative references

The following referenced documents are indispensable for the application of this document. For dated references, only the edition cited applies. For undated references, the latest edition of the referenced document (including any amendments) applies.

IEC 60512-4-1, *Connectors for electronic equipment – Tests and measurements – Part 4-1: Voltage stress tests – Test 4a: Voltage proof*

IEC 60512-4-2, *Connectors for electronic equipment – Tests and measurements – Part 4-2: Voltage stress tests – Test 4b: Partial discharge*

IEC 60512-6-2, *Connectors for electronic equipment – Tests and measurements – Part 6-2: Dynamic stress tests – Test 6b: Bump*

IEC 60512-6-3, *Connectors for electronic equipment – Tests and measurements – Part 6-3: Dynamic stress tests – Test 6c: Shock*

IEC 60512-6-4, *Connectors for electronic equipment – Tests and measurements – Part 6-4: Dynamic stress tests – Test 6d: Vibration (sinusoidal)*

IEC 60512-8, *Electromechanical components for electronic equipment; basic testing procedures and measuring methods – Part 8: Connector tests (mechanical) and mechanical tests on contacts and terminations*

--`,,```,,,,````-`-`,,`,,`,`,,`---

Copyright International Organization for Standardization
Provided by IHS under license with ISO
No reproduction or networking permitted without license from IHS Not for Resale

IEC 60512-9, *Electromechanical components for electronic equipment; basic testing procedures and measuring methods – Part 9: Miscellaneous tests*

IEC 60512-11-4, *Connectors for electronic equipment – Tests and measurements – Part 11-4: Climatic tests – Test 11d: Rapid change of temperature*

IEC 60512-11-7, *Connectors for electronic equipment – Tests and measurements – Part 11-7: Climatic tests – Test 11g: Flowing mixed gas corrosion test*

IEC 60512-11-9, *Connectors for electronic equipment – Tests and measurements – Part 11-9: Climatic tests – Test 11i: Dry heat*

IEC 60512-11-10, *Connectors for electronic equipment – Tests and measurements – Part 11-10: Climatic tests – Test 11j: Cold*

IEC 60512-11-12, *Connectors for electronic equipment – Tests and measurements – Part 11-12: Climatic tests – Test 11m: Damp heat, cyclic*

IEC 60512-19-3, *Electromechanical components for electronic equipment – Basic testing procedures and measuring methods – Part 19: Chemical resistance tests – Section 3: Test 19c – Fluid resistance*

IEC 60512-23-3, *Electromechanical components for electronic equipment – Basic testing procedures and measuring methods – Part 23-3: Test 23c: Shielding effectiveness of connectors and accessories*

IEC 60529, *Degrees of protection provided by enclosures (IP Code)*

IEC 60603-7, Connectors for frequencies below 3 MHz for use with printed boards – *Part 7: Detail specification for connectors, 8-way, including fixed and free connectors with common mating features, with assessed quality*

IEC 60793-1-40, *Optical fibres – Part 1-40: Measurement methods and test procedures – Attenuation*

IEC 60793-1-41, *Optical fibres – Part 1-41: Measurement methods and test procedures – Bandwidth*

IEC 60793-1-44, *Optical fibres – Part 1-44: Measurement methods and test procedures – Cut-off wavelength*

IEC 60793-2-30, *Optical fibres – Part 2-30: Product specifications – Sectional specification for category A3 multimode fibres*

IEC 60793-2-40, *Optical fibres – Part 2-40: Product specifications – Sectional specification for category A4 multimode fibres*

IEC 60793-2-50, *Optical fibres – Part 2-50: Product specifications – Sectional specification for class B single-mode fibres*

IEC 60794-1-2, *Optical fibre cables – Part 1-2: Generic specification – Basic optical cable test procedures*

IEC 60794-2, *Optical fibre cables – Part 2: Indoor cables* – Sectional specification

IEC 60794-3, *Optical fibre cables* – Part 3: Sectional specification – *Outdoor cables*

--`,,```,,,,````-`-`,,`,,`,`,,`---

Copyright International Organization for Standardization
Provided by IHS under license with ISO
No reproduction or networking permitted without license from IHS Not for Resale

IEC 61076-2-101, *Connectors for electronic equipment – Part 2-101: Circular connectors – Detail specification for circular connectors M8 with screw- or snap-locking, M12 with screw-locking for low voltage applications*

IEC 61076-3-106, *Connectors for electronic equipment – Product requirements – Part 3-106: Rectangular connectors – Detail specification for protective housings for use with 8-way shielded and unshielded connectors for industrial environments incorporating the IEC 60603-7 series interface*

IEC 61131-2, *Programmable controllers – Part 2: Equipment requirements and tests*

IEC 61156 (all parts), *Multicore and symmetrical pair/quad cables for digital communications – Measurement of coupling attenuation of balances cabling in laboratory conditions*

IEC 61156-5-1 (all parts), *Multicore and symmetrical pair/quad cables for digital communications*

IEC 61156-5-1, *Multicore and symmetrical pair/quad cables for digital communications – Part 5-1: Symmetrical pair/quad cables with transmission characteristics up to 600 MHz – Horizontal floor wiring - Blank detail specification*

IEC 61156-6-1, *Multicore and symmetrical pair/quad cables for digital communications – Part 6-1: Symmetrical pair/quad cables with transmission characteristics up to 600 MHz – Work area wiring – Blank detail specification*

IEC 61300-2-1, *Fibre optic interconnecting devices and passive components – Basic test and measurement procedures – Part 2-1: Tests – Vibration (sinusoidal)*

IEC 61300-2-4, *Fibre optic interconnecting devices and passive components – Basic test and measurement procedures – Part 2-4: Tests – Fibre(cable retention*

IEC 61300-2-5, *Fibre optic interconnecting devices and passive components – Basic test and measurement procedures – Part 2-5: Tests – Torsion/twist*

IEC 61300-2-9, *Fibre optic interconnecting devices and passive components – Basic test and measurement procedures – Part 2-9: Tests – Shock*

IEC 61300-2-18, *Fibre optic interconnecting devices and passive components – Basic test and measurement procedures – Part 2-18: Tests – Dry heat – High temperature endurance*

IEC 61300-2-22, *Fibre optic interconnecting devices and passive components – Basic test and measurement procedures – Part 2-22: Tests – Change of temperature*

IEC 61300-2-30, *Fibre optic interconnecting devices and passive components – Basic test and measurement procedures – Part 2-30: Tests – Solar radiation*

IEC 61300-2-34, *Fibre optic interconnecting devices and passive components – Basic test and measurement procedures – Part 2-34: Tests – Resistance to solvents and contaminating fluids*

IEC 61300-2-44, *Fibre optic interconnecting devices and passive components – Basic test and measurement procedures – Part 2-44: Tests – Flexing of the strain relief of fibre optic devices*

IEC 61300-2-46, *Fibre optic interconnecting devices and passive components – Basic test and measurement procedures – Part 2-46: Tests – Damp heat, cyclic*

--`,,```,,,,````-`-`,,`,,`,`,,`---

Copyright International Organization for Standardization
Provided by IHS under license with ISO
No reproduction or networking permitted without license from IHS Not for Resale

IEC 61300-3-34, *Fibre optic interconnecting devices and passive components – Basic test and measurement procedures – Part 3-34: Examinations and measurements – Attenuation of random mated connectors*

IEC 61753 (all parts), *Fibre optic interconnecting devices and passive components performance standard – Specification for the testing of optical fibre communication cabling in accordance with ISO/IEC 24702 – Cords – Blank detail specification*

IEC 61754-20, *Fibre optic connector interfaces – Part 20: Type LC connector family*

IEC 61918, *Digital data communications for measurement and control – Installation of communcation networks in industrial control systems*

IEC 61935-1, *Testing of balanced communication cabling in accordance with ISO/IEC 11801 – Part 1: Installed cabling*

IEC 61935-2, *Testing of balanced communication cabling in accordance with ISO/IEC 11801 – Part 2: Patch cords and work area cords*

IEC 62012-1, *Multicore and symmetrical pair/quad cables for digital communications to be used in harsh environments – Part 1: Generic specification*

ISO/IEC 11801:2002, *Information technology – Generic cabling for customer premises*

ISO/IEC 11801, *Information technology – Generic cabling for customer premises*

NOTE Refer to the second edition of ISO/IEC 11801, published in 2002, where this date has been specified. For undated references, use the latest edition of ISO/IEC 11801.

ISO/IEC 14763 (all parts), *Information technology – Implementation and operation of customer premises cabling*

ISO/IEC 14763-1, *Information technology – Implementation and operation of customer premises cabling – Part 1: Administration*

ISO/IEC TR 14763-2, *Information technology – Implementation and operation of customer premises cabling – Part 2: Planning and installation*

ISO/IEC 14763-3, *Information technology – Implementation and operation of customer premises cabling – Part 3: Testing of optical fibre cabling*

ISO/IEC 18010, *Information technology – Pathways and spaces for customer premises cabling*

## 3 Definitions and abbreviations

### 3.1 Definitions

For the purposes of this International Standard the following definitions apply in addition to those of ISO/IEC 11801.

**3.1.1**
**apparatus**
one or more pieces of equipment having specific and defined overall functions within industrial premises served by one or more network interfaces

--`,,```,,,,````-`-`,,`,,`,`,,`---

Copyright International Organization for Standardization
Provided by IHS under license with ISO
No reproduction or networking permitted without license from IHS Not for Resale

**3.1.2**
**apparatus attachment cord**
cords used to connect a telecommunications outlet (TO) to a network interface

**3.1.3**
**automation island**
cabling together with active and passive components within apparatus served by a network interface

**3.1.4**
**bulkhead**
a wall or barrier which maintains the ingress and climatic environmental classifications applicable on either side

**3.1.5**
**channel**
end-to-end transmission path connecting any two pieces of application-specific equipment

NOTE 1 Equipment and apparatus attachment cords are included in the channel but not the connecting hardware into the application-specific equipment.

NOTE 2 This channel definition covers passive elements only. Active elements, such as transmitters or receivers, are not part of any channel in this standard.

**3.1.6**
**floor cable**
cable connecting the floor distributor to the intermediate distributor

**3.1.7**
**floor distributor**
distributor used to make connections between the floor cable, other cabling subsystems and active equipment

**3.1.8**
**functional performance**
level of transmission performance able to support intended Class of applications

**3.1.9**
**intermediate cable**
cable connecting the intermediate distributor to the TO

**3.1.10**
**intermediate distributor**
the distributor used to make connections between the intermediate cable, other cabling subsystems and active equipment

**3.1.11**
**MICE**
classification system that describes the environment conditions that are local to a channel based upon the following factors:
– mechanical (M),
– ingress (I),
– climatic and chemical (C),
– electromagnetic (E)

**3.1.12**
**network interface**
interface between the apparatus attachment cabling and the apparatus network

--`,,```,,,,````-`-`,,`,,`,`,,`---
Copyright International Organization for Standardization
Provided by IHS under license with ISO
No reproduction or networking permitted without license from IHS Not for Resale

**3.1.13**
**operating temperature**
stabilised temperature of the cabling combining ambient temperature with any increase due to the application being supported

**3.1.14**
**telecommunications**
includes the transmission of information in support of automation, process control and monitoring applications

NOTE This definition applies to this International Standard in addition to the definition given in ISO/IEC 11801.

**3.1.15**
**telecommunications outlet (TO)**
a fixed connecting device where the intermediate cable terminates and which provides the interface to the apparatus attachment cabling

### 3.2 Abbreviations

For the purposes of this International Standard the following abbreviations apply in addition to those of ISO/IEC 11801.

| | |
|---|---|
| AO | automation outlet |
| ELTCTL | equal level transverse conversion transfer loss |
| FD | floor distributor |
| ID | intermediate distributor |
| MICE | mechanical, ingress, climatic and chemical, electromagnetic |
| NI | network interface |
| TCL | transverse conversion loss |
| TO | telecommunications outlet |

## 4 Conformance

For a cabling system to conform to this International Standard:

a) the structure and configuration shall conform to the requirements of clause 5;

b) the interfaces to the cabling at the telecommunications outlet (TO) shall conform to the requirements of clause 9 with respect to mating interfaces and performance when subjected to environmental conditions, local to the interfaces (see note 1), as defined by the applicable environment of clause 6;

c) connecting hardware at other places in the cabling structure shall conform to the requirements of clause 9 when subjected to environmental conditions, local to the connecting hardware (see note 1), as defined by the applicable environmental Class(es) of clause 6;

d) channels (see note 2) shall conform to the requirements of the applicable transmission performance Class of clause 6 when subjected to environmental conditions, local to the channels (see note 1), as defined by the applicable environment of clause 6. This shall be achieved by one of the following:

   - a channel design and implementation ensuring that the prescribed channel performance Class of clause 6 is met;
   - attachment of appropriate components to a permanent link design meeting the prescribed performance Class of Annex A. Channel performance shall be assured where a channel is created by adding more than one cord to either end of a permanent link meeting the requirements of Annex A;
   - using the reference implementations of clause 7 and compatible cabling components conforming to the requirements of clauses 8, 9 and 10, based upon a statistical approach of performance modelling;

Copyright International Organization for Standardization
Provided by IHS under license with ISO
No reproduction or networking permitted without license from IHS Not for Resale

e) local regulations concerning safety and electromagnetic emissions shall be met.

The channel transmission performance requirements of clause 6 are also achieved when subjected to environmental conditions local to the channels, as defined in clause 6 using the reference implementations of Annex C and compatible cabling components conforming to the requirements of clauses 8, 9 and 10, based upon a statistical approach of performance modelling (see note 3).

Test methods to ensure conformance with the channel and link requirements of clause 6 and Annex A respectively are specified in IEC 61935-1 and Annex B of this standart. The treatment of measured results that fail to meet the requirements of this clause, or lie within the relevant measurement accuracy, shall be clearly documented within a quality plan as described in ISO/IEC 14763-2.

NOTE 1 The applicable environment of clause 6, local to the cabling or cabling component(s), is that of the external environment or that modified environment created by use of mitigating installation techniques.

NOTE 2 The word “channel” refers to the passive cabling between the interfaces described in clauses 5 and 6 and is used specifically in this context throughout this International Standard. The meaning of the word “channel” as used in other standards is not applicable.

NOTE 3 The use of components suitable for use when subject to certain environmental conditions does not automatically assure that the resulting channel meets the applicable transmission performance Class of clause 6 when subjected to those environment conditions.

Installation and administration of cabling in accordance with this standard should be carried out in accordance with the ISO/IEC 14763 series of standards.

This document does not specify which tests and sampling levels should be adopted. The test parameters to be measured and the sampling levels to be applied for a particular installation should be defined in the installation specification and quality plans for that installation prepared in accordance with ISO/IEC 14763-2.

Specifications marked "ffs" (for further study) are preliminary and are not required for conformance to this International Standard.

## 5 Structure

### 5.1 General

This clause identifies the functional elements of generic cabling for industrial premises, describes how they are connected together to form subsystems and identifies the interfaces at which application-specific components are connected. Applications listed in Annex E are supported by connecting active equipment at the TOs and the distributors.

In general, all functional elements, subsystems and interfaces from the campus distributor to the floor distributor as described in ISO/IEC 11801 are applicable.

### 5.2 Functional elements

In addition to the distributors specified in ISO/IEC 11801 this standard specifies the following functional elements and interfaces of generic cabling for industrial premises:

- floor cable;
- intermediate distributor (ID);
- intermediate cable;
- TO;
- network interface (NI).

--`,,```,,,,````-`-`,,`,,`,`,,`---

Copyright International Organization for Standardization
Provided by IHS under license with ISO
No reproduction or networking permitted without license from IHS Not for Resale

As shown in Figure 2, an ID is able to serve TOs on separate pieces of apparatus or multiple TOs on a single piece of apparatus. The type and nature of the apparatus cabling are beyond the scope of this International Standard.

Groups of functional elements are connected together to form cabling subsystems.

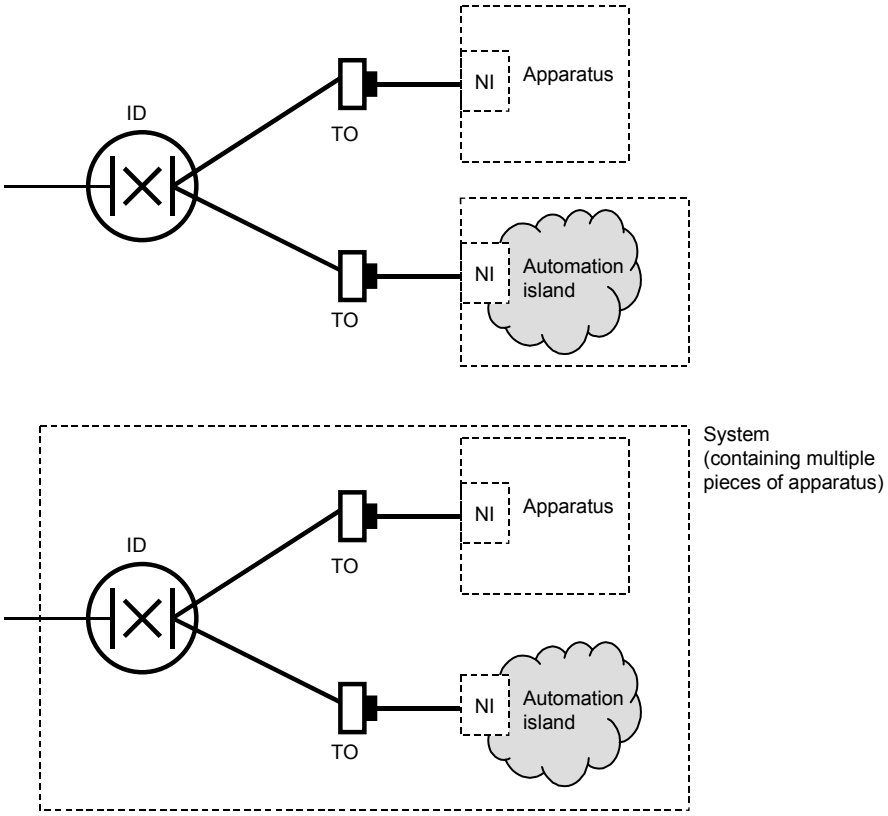


**Figure 2 – Configuration of apparatus-based functional elements within industrial premises**

## 5.3 Cabling subsystem

### 5.3.1 General structure

Generic cabling schemes for industrial premises contain up to four types of cabling subsystems: campus backbone, building backbone, floor and intermediate. In addition, cabling is necessary to connect telecommunication, process control and monitoring equipment to the generic cabling but this cabling is application-specific and therefore not specified by this International Standard. The composition of the subsystems is described in 5.3.2, 5.3.3, 5.3.4 and 5.3.5. The cabling subsystems are connected together to create a generic cabling structure as shown in Figure 3.

The distributors provide the means to configure the cabling to support different topologies such as bus, star and ring. Campus, building and floor distributors can also be used to support cabling in accordance with ISO/IEC 11801.

--`,,```,,,,````-`-`,,`,,`,`,,`---

Copyright International Organization for Standardization
Provided by IHS under license with ISO
No reproduction or networking permitted without license from IHS Not for Resale

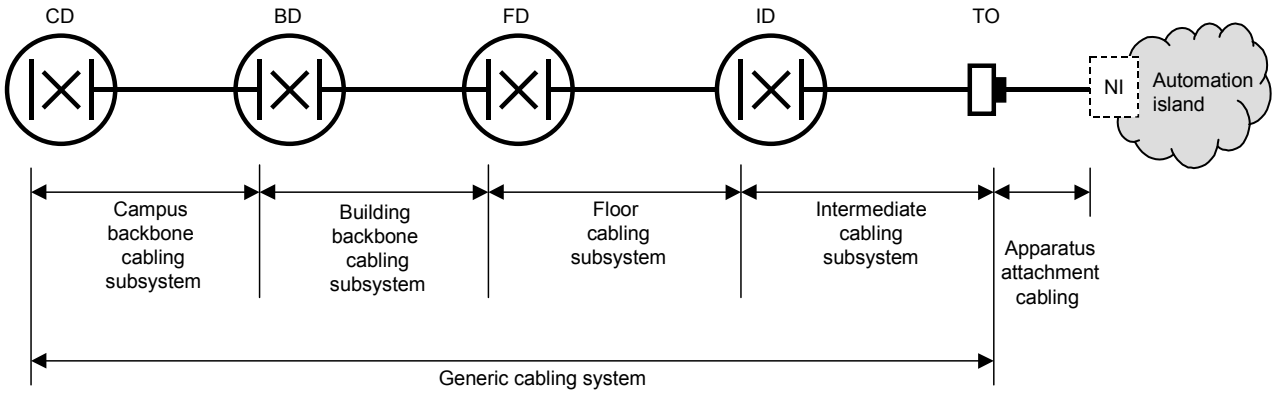


**Figure 3 – Structure of generic cabling for industrial environment**

The number and type of subsystems that are included in a generic cabling implementation depends upon the size and structure of the campus, building and the strategy of the user.

Connections between cabling subsystems are either active, requiring application-specific equipment or passive. Connection to application-specific equipment adopts either an interconnect or a cross-connect approach (see ISO/IEC 11801). Passive connections between cabling subsystems shall be achieved using cross-connections generally by way of either patch cords or jumpers.

Examples of more complex equipment connection systems that are not in accordance with this clause are described in Annex C and Annex D as follows:

- Annex C describes reference implementations, using the components clauses 8, 9 and 10, which deliver transmission performance in accordance with the Classes of clause 6.

- Annex D describes reference implementations, using the components clauses 8, 9 and 10, that are capable of delivering transmission performance in accordance with the Classes of clause 6 but are not able to be supported in a normative manner by this standart.

### 5.3.2 Campus backbone cabling subsystem

ISO/IEC 11801 specifies requirements for campus backbone cabling subsystems.

### 5.3.3 Building backbone cabling subsystem

ISO/IEC 11801 specifies requirements for building backbone cabling subsystems.

### 5.3.4 Floor cabling subsystem

The floor cabling subsystem extends from a floor distributor (FD) to the IDs connected to it. The subsystem includes

- the floor cables,
- the mechanical termination of the floor cables including the connecting hardware (e.g. of interconnect or cross-connect) at both the FD and IDs together with associated patch cords and/or jumpers,
- any passive connections to the building backbone cabling.

Although equipment cords are included in a channel, they are not considered part of the cabling subsystem because they are application-specific.

--`,,```,,,,````-`-`,,`,,`,`,,`---

Copyright International Organization for Standardization
Provided by IHS under license with ISO
No reproduction or networking permitted without license from IHS Not for Resale

The floor cable may also interconnect IDs. However, such connections shall be in addition to those required for the basic hierarchical topology.

### 5.3.5 Intermediate cabling subsystem

The intermediate cabling subsystem extends from an ID to the TO(s) connected to it. The subsystem includes

- the intermediate cables,
- the mechanical termination of the intermediate cables including the connections at the TO and the ID together with associated patch cords and/or jumpers at the ID,
- the TO.

Although equipment cords and apparatus attachment cords are included in a channel, they are not considered part of the cabling subsystem because they are application-specific.

Connections between an intermediate and floor cabling subsystem are either active, requiring application-specific equipment or passive using either a cross-connect or interconnect approach as defined in ISO/IEC 11801.

Intermediate cables shall be continuous from the ID to the TO(s).

### 5.3.6 Centralized cabling architecture

ISO/IEC 11801 specifies requirements for centralized cabling architectures.

### 5.3.7 Design objectives

Generic cabling for industrial premises shall be designed in accordance with the objectives given in ISO/IEC 11801 and shall operate within the environmental conditions defined in clause 6.

Copyright International Organization for Standardization
Provided by IHS under license with ISO
No reproduction or networking permitted without license from IHS Not for Resale

### 5.4 Interconnection of subsystems

In industrial generic cabling, the functional elements of the cabling subsystems are interconnected to form a hierarchical structure as shown in Figure 4.

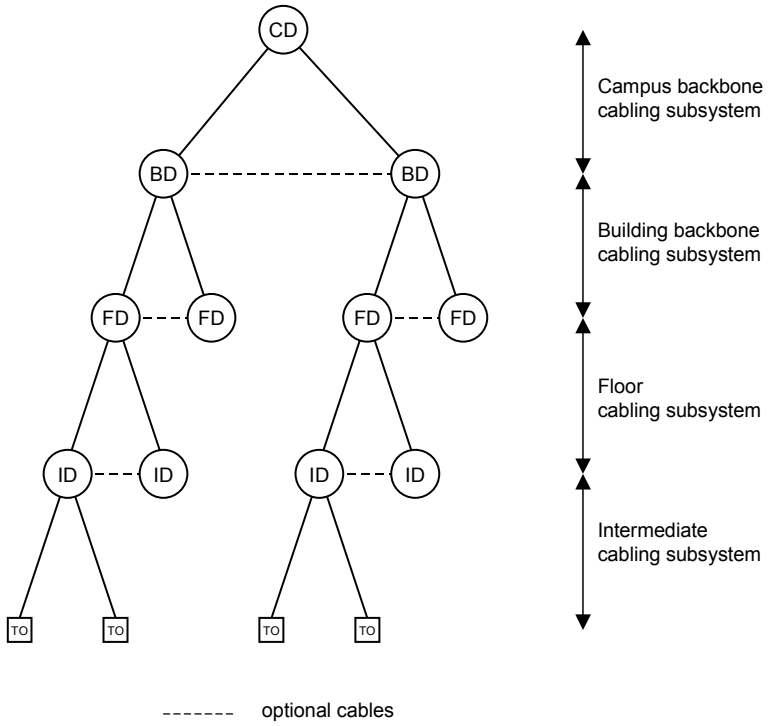


**Figure 4 – Hierarchical structure of generic cabling for industrial premises**

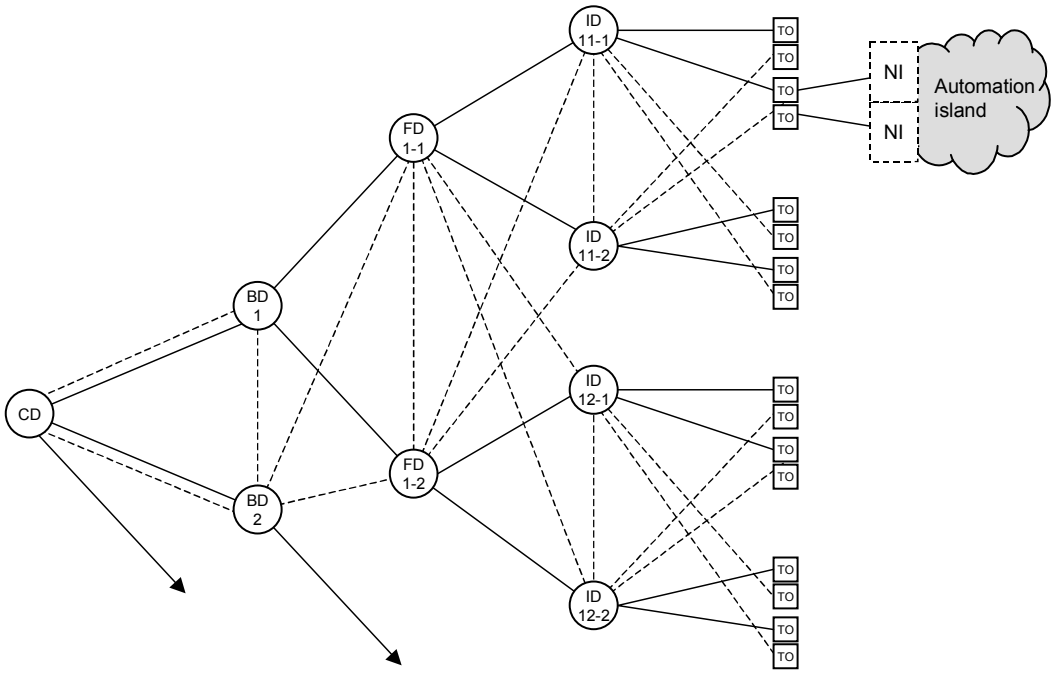


**Figure 5 – Inter-relationship of functional elements in an installation with diversity for protection against failure**

--`,,```,,,,````-`-`,,`,,`,`,,`---

Copyright International Organization for Standardization
Provided by IHS under license with ISO
No reproduction or networking permitted without license from IHS Not for Resale

In certain circumstances, for example for security or reliability reasons, redundancy can be built into a cabling design. Figure 5 is a diagram showing one of many possible examples of the connection of functional elements within the structured framework to provide such redundancy. This might form the basis for the design of generic cabling for a building, providing some protection against such hazards as fire damage or the failure of the external network feeder cable.

### 5.5 Accommodation of functional elements

Figure 6 shows an example of how the functional elements are accommodated in a building.

FDs and IDs are typically located in industrial enclosures, equipment rooms, telecommunication rooms or adjacent to, on or within, apparatus. Other distributors are typically located in equipment rooms or telecommunications rooms as detailed in ISO/IEC 11801.

Cables are routed using pathways. A variety of cable management systems can be used to support the cables within the pathways including ducts, conduits and trays. Requirements for the pathways and the cable management systems within them are provided in ISO/IEC 18010 and IEC 61918.

TOs are normally located on the fixed building structure. If necessary, the TO can be placed within or on an apparatus.

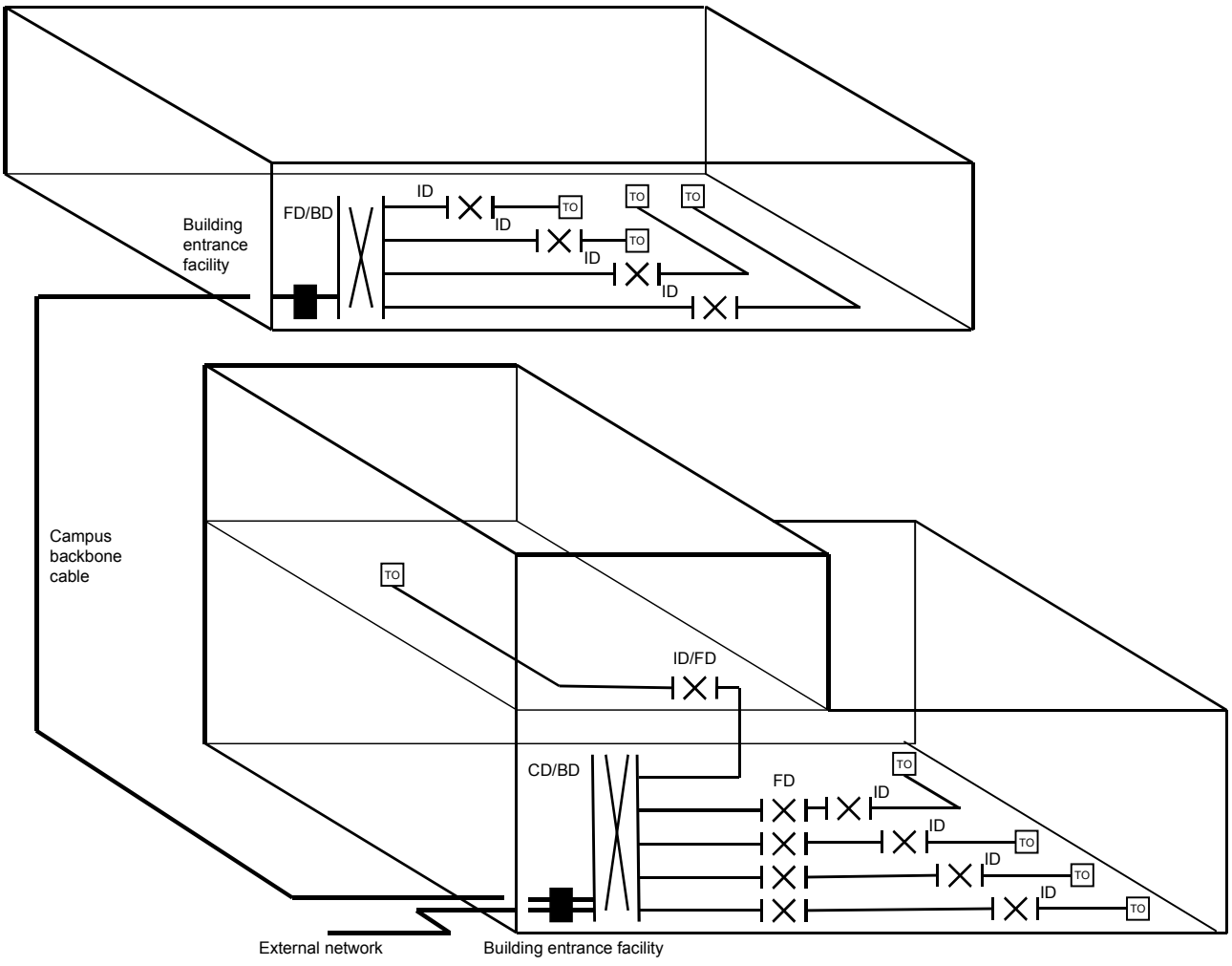


**Figure 6 – Accommodation of functional elements**

Copyright International Organization for Standardization
Provided by IHS under license with ISO
No reproduction or networking permitted without license from IHS
Not for Resale

## 5.6 Interfaces

### 5.6.1 Equipment interfaces and test interfaces

Equipment interfaces to generic cabling are located at the ends of each subsystem. Any distributor may have an equipment interface to an external service at any port.

Test interfaces to generic cabling are located at the ends of each subsystem.

Figure 7 shows the potential equipment and test interfaces.

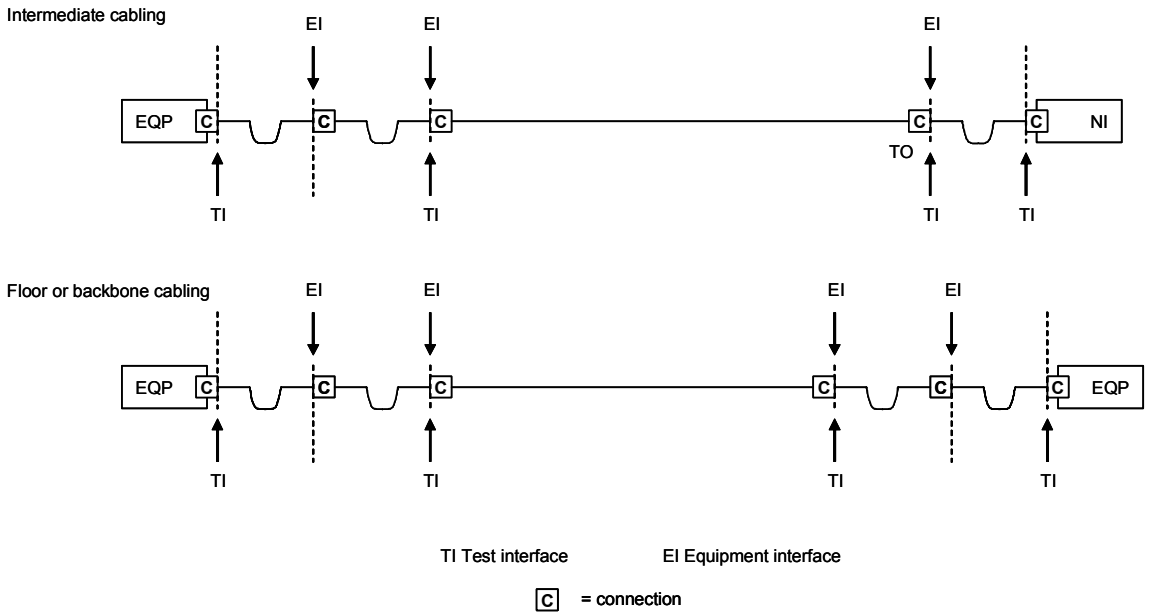


**Figure 7 – Test and equipment interfaces**

### 5.6.2 Channels and permanent links

The transmission performance of generic cabling between specific test interfaces is detailed in clause 6 for channels and Annex A for permanent links.

The channel is the transmission path between active equipment interfaces. A typical channel would consist of a cable in the intermediate cabling subsystem together with apparatus attachment and equipment cords. For longer reach services the channel would be formed by the connection of two or more subsystems (as well as with apparatus attachment and equipment cords). It is important that the generic cabling channel is designed to meet the required Class of performance for the applications that are to be supported. The channel excludes the mated connection at the active equipment.

### 5.6.3 External network interface

See ISO/IEC 11801.

## 5.7 Dimensioning and configuring

### 5.7.1 General

ISO/IEC 11801 specifies requirements for dimensioning and configuration for functional elements of generic cabling. The following subclauses specify additional and/or modified requirements for generic cabling for industrial premises.

--`,,```,,,,````-`-`,,`,,`,`,,`---

Copyright International Organization for Standardization
Provided by IHS under license with ISO
No reproduction or networking permitted without license from IHS Not for Resale

### 5.7.2 Distributors

Usually there would be one campus distributor per campus. However, the number of BDs, FDs and IDs shall be determined by the size of the building, the floor space and the disposition of apparatus.

If the premises comprise only a single building that is small enough to be served by a single BD, there is no need for a campus backbone cabling subsystem.

The design of distributors shall ensure that the lengths of patch cords, jumpers and equipment cords are minimised and administration should ensure that the design lengths are maintained during operation. Distributors should be located in such a way that the resulting cable lengths are consistent with the channel performance requirements of clause 6

Where the components of clauses 8, 9 and 10 are used the distributors shall be located in accordance with the reference implementations of clause 7. Where other components are used, distributors shall be located so that the desired performance Class of clause 6 is delivered.

The functions of multiple distributors may be combined.

### 5.7.3 Cables

Cable types used in the reference implementations of clause 7 are given in clause 8. Hardware for connecting cables shall only provide direct onward attachment for each conductor and shall not provide any contact between more than one incoming or outgoing conductor (e.g. bridge taps shall not be used).

### 5.7.4 Apparatus attachment and equipment cords

The apparatus attachment cord connects the TO to the network interface. Equipment cords connect active equipment to the generic cabling at distributors. Both are non-permanent and application-specific. Assumptions have been made concerning the length and the transmission performance of these cords; the assumptions are identified when relevant.

The performance contribution of these cords shall be taken into account in the design of the channel. Clause 7 provides guidance on cord lengths for reference implementations of generic cabling.

### 5.7.5 Patch cords and jumpers

Patch cords and jumpers are used within cross-connect implementations at distributors. The performance contribution of these cords shall be taken into account in the design of the channel. Clause 7 provides guidance on cord/jumper lengths for reference implementations of generic cabling.

### 5.7.6 TO

The design of generic cabling for industrial premises should provide for TOs to be installed and located according to the requirements of the apparatus.

TOs may be presented singly or in groups, as indicated in the following list:

- each apparatus network shall be served by a minimum of one TO;
- the TO shall be configured with either balanced cable terminated in accordance with 9.4 or optical fibres terminated in accordance with 9.5;

Copyright International Organization for Standardization
Provided by IHS under license with ISO
No reproduction or networking permitted without license from IHS Not for Resale

- where balanced cable is used, a 4 pair balanced cable should be terminated at the TO;
  - 2 pairs per TO, terminated in accordance with 9.4.4.2, may be used, however this may require pair reassignment and will not support some applications (see Annex E);
  - 2 pairs per TO, terminated in accordance with 9.4.4.3, may be used, however the interface of 9.4.4.3 cannot provide all the transmission performance options provided by the interface of 9.4.4.2 and will not support some applications (see Annex E);
- there shall be provision for identification, visible to the user, at the location of each TO;
- application-specific devices, if used, shall be external to the TO.

Care should be taken that the initial pair assignment and all subsequent changes are recorded (see ISO/IEC 14763-1 for details of recommended administration schemes). Pair reassignment by means of inserts is allowed.

#### 5.7.7 Telecommunications rooms and equipment rooms

See ISO/IEC 11801.

#### 5.7.8 Industrial enclosures

Industrial enclosures shall provide all the facilities (space, power, etc.), in accordance with national and local regulations, for industrial control equipment, ID and power distribution equipment. IDs will typically be located within industrial enclosures to provide connectivity to equipment within and adjacent to the industrial enclosure. The equipment within the industrial enclosure will conform to the appropriate environmental classes outlined in clause 6. The industrial enclosures may or may not provide incremental environmental protection for their contents.

#### 5.7.9 Building entrance facilities

See ISO/IEC 11801.

## 6 Channel performance

### 6.1 General

This clause specifies the minimum channel performance of generic cabling for industrial premises. The channel performance is specified as a combination of environmental performance and transmission performance.

The environmental performance of the cabling is specified in terms of Classes as specified in 6.2.

The transmission performance of the cabling is specified for individual channels for balanced cable and optical fibre in terms of Classes as specified in 6.3.

The environmental and transmission performance of a channel is specified at and between the connections to active equipment as shown in Figure 8. The transmission and environmental performance of the connections at the active equipment are the responsibility of the equipment supplier in support of the applications listed in Annex E.

The channel comprises only passive sections of cable, connections, apparatus attachment cords, equipment cords, patch cords and jumpers.

Copyright International Organization for Standardization
Provided by IHS under license with ISO
No reproduction or networking permitted without license from IHS Not for Resale

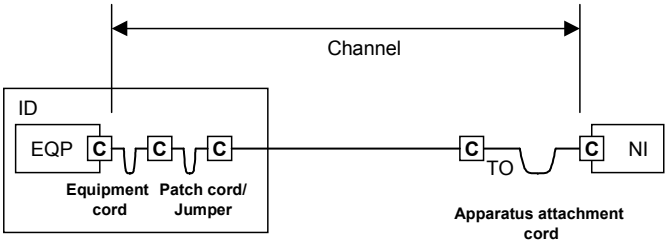


**Figure 8 – Transmission performance of a channel**

Application support depends on channel transmission performance only, which in turn depends on cable length, the number of connections and the performance of the components within the environments to which the channel is subjected.

The required transmission performance Class shall be met for all environmental performance Classes specified for the channel.

Transmission performance shall be assured by the selection of cabling components suitable for the environmental Class(es) or by the use of pathway systems and installation practices that provide the required protection to the installed cabling.

Channels are implemented using either

- intermediate cabling only,
- floor cabling only,
- building backbone cabling only,
- campus backbone cabling only,
- combinations of the above.

Figure 9 shows an example of a NI connected to a host using two channels; an optical fibre channel and a balanced cabling channel. The optical fibre and balanced cabling channels are connected together using an optical fibre to balanced cable converter. There are four channel interfaces; one at each end of the balanced cabling channel, and one at each end of the optical fibre cabling channel.

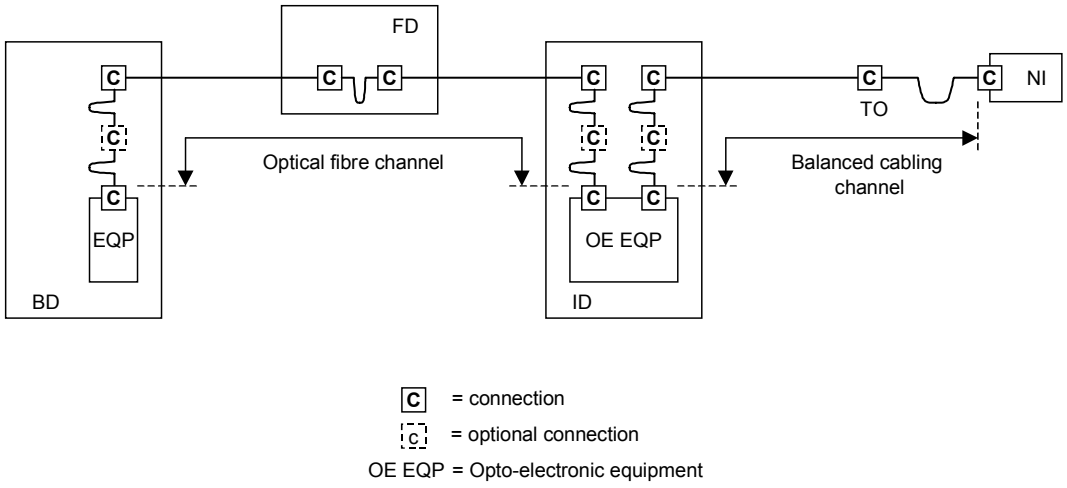


**Figure 9 – Example of a system showing the location of cabling interfaces and extent of associated channels**

Copyright International Organization for Standardization
Provided by IHS under license with ISO
No reproduction or networking permitted without license from IHS
Not for Resale

## 6.2 Environmental performance

### 6.2.1 General

The environmental performance specifications of channels are classified to cover the different conditions under which channels are required to operate in industrial premises.

The environmental classification described in this clause shall be used for the selection of components and/or the protection afforded to them.

It is possible for the different locations within a channel to be subject to different environments. For example, one end of a channel may be in an office area and the other end of the channel may be subjected to a more severe environment. The description of the channel environment has to be divided up accordingly.

Furthermore, the applicable environment is that local to the cabling components within the channel. The local environment may, where relevant, be created by installation techniques applied to the channel in order to mitigate more extreme environments than exist within the premises.

NOTE With regard to temperature the local environment is considered to be the operating temperature of the cabling.

### 6.2.2 Environmental classification

This International Standard classifies the environment for generic cabling within industrial premises as defined in Table 1.

Certain environments (e.g. nuclear, chemical, fire, explosive, damage risk from animals, salt mist) demand for additional requirements beyond those of this clause. Further details on specific environments are shown in Annex F.

**Table 1 – Channel environments**

| | 1 | 2 | 3 |
|---|---|---|---|
| Mechanical rating | $M_1$ | $M_2$ | $M_3$ |
| Ingress rating | $I_1$ | $I_2$ | $I_3$ |
| Climatic rating | $C_1$ | $C_2$ | $C_3$ |
| Electromagnetic rating | $E_1$ | $E_2$ | $E_3$ |

The definition of a given classification includes the definition of lower classifications i.e. channels designed to operate under environmental conditions defined by $M_2$ shall continue to operate under environmental conditions defined by $M_1$.

Channel environments may be classified by using any combination of the MICE scheme, for example $M_1I_2C_3E_1$. Care should be taken to accurately classify the channel environment in such a way as to allow the selection of suitable components.

For the purposes of this standard

- $M_1I_1C_1E_1$ describes a typical environment such as that assumed within ISO/IEC 11801,
- $M_2I_2C_2E_2$ describes a worst case light industrial environment,
- $M_3I_3C_3E_3$ describes a worst case industrial environment as defined by this standard.

The environmental Classes are defined in Table 2 and shall be met by design.

For each M, I, C or E group, the classification of a given environment is determined by the most demanding parameter within the M, I, C or E group. However, the selection of

Copyright International Organization for Standardization
Provided by IHS under license with ISO
No reproduction or networking permitted without license from IHS Not for Resale

components shall be based on the specific demands of each of the parameters within the M, I, C or E group, which may be less demanding than the overall classification of the group.

**Table 2 – Details of environmental classification**

| **Mechanical** | **$M_1$** | **$M_2$** | **$M_3$** |
|---|---|---|---|
| Shock/bump (see a)) | | | |
| Peak acceleration | 40 $ms^{-2}$ | 100 $ms^{-2}$ | 250 $ms^{-2}$ |
| Vibration | | | |
| Displacement amplitude (2 Hz to 9 Hz) | 1,5 mm | 7,0 mm | 15,0 mm |
| Acceleration amplitude (9 Hz to 500 Hz) | 5 $ms^{-2}$ | 20 $ms^{-2}$ | 50 $ms^{-2}$ |
| Tensile force | See b) | See b) | See b) |
| Crush | 45 N over 25 mm (linear) min. | 1 100 N over 150 mm (linear) min. | 2 200 N over 150 mm (linear) min. |
| Impact | 1 J | 10 J | 30 J |
| Bending, flexing and torsion | See b) | See b) | See b) |
| **Ingress** | **$I_1$** | **$I_2$** | **$I_3$** |
| Particulate ingress (∅ max.) | 12,5 mm | 50 µm | 50 µm |
| Immersion | None | Intermittent liquid jet ≤12,5 l/min ≥6,3 mm jet >2,5 m distance | Intermittent liquid jet ≤12,5 l/min ≥6,3 mm jet >2,5 m distance and immersion (≤1 m for ≤30 min) |
| **Climatic and chemical** | **$C_1$** | **$C_2$** | **$C_3$** |
| Ambient temperature | −10 °C to +60 °C | −25 °C to +70 °C | −40 °C to +70 °C |
| Rate of change of temperature | 0,1 °C per min | 1,0 °C per min | 3,0 °C per min |
| Humidity | 5 % to 85 % (non-condensing) | 5 % to 95 % (condensing) | 5 % to 95 % (condensing) |
| Solar radiation | 700 $Wm^{-2}$ | 1 120 $Wm^{-2}$ | 1 120 $Wm^{-2}$ |
| Liquid pollution (see c)) Contaminants | Concentration × $10^{-6}$ | Concentration × $10^{-6}$ | Concentration × $10^{-6}$ |
| Sodium chloride (salt/sea water) | 0 | <0,3 | <0,3 |
| Oil (dry-air concentration) (for oil types see b)) | 0 | <0,005 | <0,5 |
| Sodium stearate (soap) | None | >5 × $10^4$ aqueous non-gelling | >5 × $10^4$ aqueous gelling |
| Detergent | None | ffs | ffs |
| Conductive materials | None | Temporary | Present |

a) Bump: the repetitive nature of the shock experienced by the channel shall be taken into account.

b) This aspect of environmental classification is installation-specific and should be considered in association with IEC 61918 and the appropriate component specification

c) A single dimensional characteristic, i.e. Concentration × $10^{-6}$, was chosen to unify limits from different standards.

Copyright International Organization for Standardization
Provided by IHS under license with ISO
No reproduction or networking permitted without license from IHS Not for Resale

| Gaseous pollution (see c)) Contaminants | Mean/Peak (Concentration × $10^{-6}$) | Mean/Peak (Concentration × $10^{-6}$) | Mean/Peak (Concentration × $10^{-6}$) |
|---|---|---|---|
| Hydrogen sulphide | <0,003/<0,01 | <0,05/<0,5 | <10/<50 |
| Sulphur dioxide | <0,01/<0,03 | <0,1/<0,3 | <5/<15 |
| Sulphur trioxide (ffs) | <0,01/<0,03 | <0,1/<0,3 | <5/<15 |
| Chlorine wet (>50 % humidity) | <0,000 5/<0,001 | <0,005/<0,03 | <0,05/<0,3 |
| Chlorine dry (<50 % humidity) | <0,002/<0,01 | <0,02/<0,1 | <0,2/<1,0 |
| Hydrogen chloride | –/<0,06 | <0,06/<0,3 | <0,6/3,0 |
| Hydrogen fluoride | <0,001/<0,005 | <0,01/<0,05 | <0,1/<1,0 |
| Ammonia | <1/<5 | <10/<50 | <50/<250 |
| Oxides of Nitrogen | <0,05/<0,1 | <0,5/<1 | <5/<10 |
| Ozone | <0,002/<0,005 | <0,025/<0,05 | <0,1/<1 |
| **Electromagnetic** | **$E_1$** | **$E_2$** | **$E_3$** |
| Electrostatic discharge – Contact (0,667 µC) | 4 kV | 4 kV | 4 kV |
| Electrostatic discharge – Air (0,132 µC) | 8 kV | 8 kV | 8 kV |
| Radiated RF – AM | 3 V/m at (80 to 1 000) MHz<br>3 V/m at (1 400 to 2 000) MHz<br>1 V/m at (2 000 to 2 700) MHz | 3 V/m at (80 to 1 000) MHz<br>3 V/m at (1 400 to 2 000) MHz<br>1 V/m at (2 000 to 2 700) MHz | 10 V/m at (80 to 1 000) MHz<br>3 V/m at (1 400 to 2 000) MHz<br>1 V/m at (2 000 to 2 700) MHz |
| Conducted RF | 3 V at 150 kHz to 80 MHz | 3 V at 150 kHz to 80 MHz | 10 V at 150 kHz to 80 MHz |
| EFT/B (comms) | 500 V | 1 000 V | 1 000 V |
| Surge (transient ground potential difference) – Signal, line to earth | 500 V | 1 000 V | 1 000 V |
| Magnetic Field (50/60 Hz) | 1 $Am^{-1}$ | 3 $Am^{-1}$ | 30 $Am^{-1}$ |
| Magnetic Field (60 Hz to 20 000 Hz) | ffs | ffs | ffs |

a) Bump: the repetitive nature of the shock experienced by the channel shall be taken into account.

b) This aspect of environmental classification is installation-specific and should be considered in association with IEC 61918 and the appropriate component specification.

c) A single dimensional characteristic, i.e. Concentration × $10^{-6}$, was chosen to unify limits from different standards.

## 6.3 Transmission performance

### 6.3.1 General

The channel transmission performance specifications are separated into Classes that allow for the transmission of the applications in Annex E.

The channel performance requirements described in this clause shall be used for the design and may be used for verification of any implementation of this International Standard, using the test methods defined, or referred to, by this clause. In addition, these requirements can be used for application development and trouble shooting.

The channel specifications in this clause allow for the transmission of defined Classes of applications over distances other than those of clause 7, and/or using media and components with different transmission performance than those of clauses 8, 9 and 10.

Copyright International Organization for Standardization
Provided by IHS under license with ISO
No reproduction or networking permitted without license from IHS Not for Resale

Consideration should be given to measuring performance at worst case temperatures, or calculating worst case performance based on measurements made at other temperatures.

Permanent link performance requirements are specified in Annex A.

### 6.3.2 Balanced cabling

#### 6.3.2.1 General

A Class A channel is specified so that it will provide the minimum transmission performance to support Class A applications. Similarly, Class B, C, D, E and F channels provide the transmission performance to support Class B, C, D, E and F applications, respectively. Channels of a given Class will support all applications of a lower Class. Class A is regarded as the lowest Class.

The floor and intermediate cabling shall be designed to provide a minimum of Class D channel performance as specified in ISO/IEC 11801. The implementation of channels of a lower Class, incorporating intermediate cabling, is discussed in Annex C and Annex D.

In the case of cable sharing, additional requirements shall be taken into account for balanced cabling. The additional crosstalk requirements for cables are specified in 9.3 of ISO/IEC 11801, ed.2 (2002).

#### 6.3.2.2 Additional requirements

##### 6.3.2.2.1 Transverse conversion loss (TCL)

These requirements replace the requirement for unbalance attenuation, measured as LCL, of clause 6.4.14 of ISO/IEC 11801:2002.

The TCL parameter is applicable to all Classes.

The TCL of each pair of a channel constructed of unscreened cabling components that is intended to be subjected to an environmental classification $E_x$ shall meet the limits computed, to one decimal place, using the formulae of Table 3. The limits shown in Table 4 are derived from the formulae at key frequencies only.

NOTE $E_1$ requirements in Table 3 and Table 4 are taken from future ISO/IEC 11801, Ed.2, Amendment 1 (see bibliography).

The TCL of each pair of a channel constructed of screened cabling components that is subjected to an environmental classification $E_x$ is not specified (ffs).

The TCL requirements shall be met at both ends of the cabling and shall be achieved by the appropriate choice of cables and connecting hardware. Installation mitigation may be needed when components from a lower performance Category are used in a higher performance system.

Copyright International Organization for Standardization
Provided by IHS under license with ISO
No reproduction or networking permitted without license from IHS Not for Resale

**Table 3 – Formulae for TCL limits for an unscreened cabling channel**

| Class | Frequency MHz | Environmental classification | | |
|---|---|---|---|---|
| | | $E_1$ | $E_2$ | $E_3$ |
| | | Minimum TCL dB | | |
| A | 0,1 | 30 | 30 | 30 |
| B | $f$ = 0,1 | 45 | 45 | 45 |
| | $f$ = 1 | 20 | 20 | 20 |
| C | $1 \le f \le 16$ | $30 - 5 \times \lg f$ | $30 - 5 \times \lg f$ | $30 - 5 \times \lg f$ |
| D | $1 \le f \le 30$ | $53 - 15 \times \lg f$ , 40 max | $63 - 15 \times \lg f$ , 40 max | $73 - 15 \times \lg f$ , 40 max |
| | $30 \le f \le 100$ | $60{,}4 - 20 \times \lg f$ | $70{,}4 - 20 \times \lg f$ | $80{,}4 - 20 \times \lg f$ |
| E | $1 \le f \le 30$ | $53 - 15 \times \lg f$ | $63 - 15 \times \lg f$ , 40 max | $73 - 15 \times \lg f$ , 40 max |
| | $30 \le f \le 250$ | $60{,}4 - 20 \times \lg f$ | $70{,}4 - 20 \times \lg f$ | $80{,}4 - 20 \times \lg f$ |
| F | $1 \le f \le 30$ | $53 - 15 \times \lg f$ | $63 - 15 \times \lg f$ , 40 max | $73 - 15 \times \lg f$ , 40 max |
| | $30 \le f \le 600$ | $60{,}4 - 20 \times \lg f$ | $70{,}4 - 20 \times \lg f$ | $80{,}4 - 20 \times \lg f$ |
| NOTE Values above 100 MHz are for information only. | | | | |

**Table 4 – Informative TCL limits for an unscreened cabling channel at key frequencies**

| | | Minimum TCL dB | | | | | |
|---|---|---|---|---|---|---|---|
| Frequency MHz | | 0,1 | 1,0 | 16,0 | 100,0 | 250,0 | 600,0 |
| Class A | $E_1$ | 30,0 | N/A | N/A | N/A | N/A | N/A |
| | $E_2$ | 30,0 | N/A | N/A | N/A | N/A | N/A |
| | $E_3$ | 30,0 | N/A | N/A | N/A | N/A | N/A |
| Class B | $E_1$ | 45,0 | 20,0 | N/A | N/A | N/A | N/A |
| | $E_2$ | 45,0 | 20,0 | N/A | N/A | N/A | N/A |
| | $E_3$ | 45,0 | 20,0 | N/A | N/A | N/A | N/A |
| Class C | $E_1$ | N/A | 30,0 | 24,0 | N/A | N/A | N/A |
| | $E_2$ | N/A | 30,0 | 24,0 | N/A | N/A | N/A |
| | $E_3$ | N/A | 30,0 | 24,0 | N/A | N/A | N/A |
| Class D | $E_1$ | N/A | 40,0 | 34,9 | 20,4 | N/A | N/A |
| | $E_2$ | N/A | 40,0 | 40,0 | 30,4 | N/A | N/A |
| | $E_3$ | N/A | 40,0 | 40,0 | 40,0 | N/A | N/A |
| Class E | $E_1$ | N/A | 40,0 | 34,9 | 20,4 | 12,4 | N/A |
| | $E_2$ | N/A | 40,0 | 40,0 | 30,4 | 22,4 | N/A |
| | $E_3$ | N/A | 40,0 | 40,0 | 40,0 | 34,4 | N/A |
| Class F | $E_1$ | N/A | 40,0 | 34,9 | 20,4 | 12,4 | 4,8 |
| | $E_2$ | N/A | 40,0 | 40,0 | 30,4 | 22,4 | 14,8 |
| | $E_3$ | N/A | 40,0 | 40,0 | 40,0 | 34,4 | 24,8 |
| NOTE Values above 100 MHz are for information only. | | | | | | | |

Copyright International Organization for Standardization
Provided by IHS under license with ISO
No reproduction or networking permitted without license from IHS Not for Resale

The measurement of TCL for installed cabling is under development. TCL of a sample installation may be assessed by laboratory measurements of representative samples of channels assembled, using the components, connector termination practices and installation practices in question. The laboratory testing of TCL is performed using IEC 61935-1.

#### 6.3.2.2.2 Equal level transverse conversion transfer loss (ELTCTL)

The ELTCTL parameter is applicable to Classes D, E and F only.

The ELTCTL of each pair of a channel constructed of unscreened cabling components that is intended to be subjected to an environmental classification $E_x$ shall meet the limits computed, to one decimal place, using the formulae of Table 5. The limits shown in Table 6 are derived from the formulae at key frequencies only.

NOTE $E_1$ requirements in Table 5 and Table 6 are taken from ISO/IEC 11801, Ed.2, Amendment 1 (see bibliography).

The TCL of each pair of a channel constructed of screened cabling components that is subjected to an environmental classification $E_x$ is not specified (ffs).

The ELTCTL requirements shall be met at both ends of the cabling and shall be achieved by the appropriate choice of cables and connecting hardware. Installation mitigation may be needed when components from a lower performance Category are used in a higher performance system.

**Table 5 – Formulæ for ELTCTL limits for an unscreened cabling channel**

| Class | Frequency MHz | Environmental classification | | |
|---|---|---|---|---|
| | | $E_1$ | $E_2$ | $E_3$ |
| | | Minimum ELTCTL (dB) | | |
| D, E and F | $1 \le f \le 30$ | $30 - 20 \times \lg f$ . | $40 - 20 \times \lg f$ | $50 - 20 \times \lg f$ , 40 max. |

**Table 6 – Informative ELTCTL limits for an unscreened cabling channel at key frequencies**

| | | Minimum ELTCTL dB | | |
|---|---|---|---|---|
| Frequency MHz | | 1,0 | 16,0 | 30,0 |
| Class D | $E_1$ | 30,0 | 5,9 | 0,5 |
| | $E_2$ | 40,0 | 15,9 | 10,5 |
| | $E_3$ | 40,0 | 25,9 | 20,5 |
| Class E | $E_1$ | 30,0 | 5,9 | 0,5 |
| | $E_2$ | 40,0 | 15,9 | 10,5 |
| | $E_3$ | 40,0 | 25,9 | 20,5 |
| Class F | $E_1$ | 30,0 | 5,9 | 0,5 |
| | $E_2$ | 40,0 | 15,9 | 10,5 |
| | $E_3$ | 40,0 | 25,9 | 20,5 |

The measurement of ELTCTL for installed cabling is under development. ELTCTL of a sample installation may be assessed by laboratory measurements of representative samples of channels assembled using the components, connector termination practices and installation practices in question. The laboratory testing of ELTCTL is performed using IEC 61935-1.

Copyright International Organization for Standardization
Provided by IHS under license with ISO
No reproduction or networking permitted without license from IHS Not for Resale

#### 6.3.2.2.3 Coupling attenuation

The coupling attenuation parameter is applicable to Classes D, E and F only.

The coupling attenuation of each pair of a channel constructed of screened cabling components that is intended to be subjected to an environmental classification $E_x$ shall meet the limits computed, to one decimal place, using the formulae of Table 7. The limits shown in Table 8 are derived from the formulae at key frequencies only.

NOTE $E_1$ requirements in Table 7 and Table 8 are taken from future ISO/IEC 11801 Ed.2 Amendment 1 (see bibliography).

The coupling attenuation of each pair of a channel constructed of unscreened cabling components that is subjected to an environmental classification $E_X$ is not specified (ffs).

The coupling attenuation requirements shall be met at both ends of the cabling and shall be achieved by the appropriate choice of cables and connecting hardware. Installation mitigation may be needed when components from a lower performance Category are used in a higher performance system.

**Table 7 – Formulæ for coupling attenuation limits for a screened cabling channel**

| Class | Frequency MHz | Environmental classification | | |
|---|---|---|---|---|
| | | $E_1$ | $E_2$ | $E_3$ |
| | | Minimum coupling attenuation (dB) | | |
| D | $30 \le f \le 100$ | 40 | 50 | 60 |
| E | $30 \le f \le 250$ | $80 - 20 \times \lg f$, 40 max. | $90 - 20 \times \lg f$, 50 max. | $100 - 20 \times \lg f$, 60 max. |
| F | $30 \le f \le 600$ | $80 - 20 \times \lg f$, 40 max. | $90 - 20 \times \lg f$, 50 max. | $100 - 20 \times \lg f$, 60 max. |
| NOTE Coupling attenuation applies to maximum frequency specified for the Class, and beyond that to 1 GHz for general EMC information. | | | | |

**Table 8 – Informative coupling attenuation limits for a screened cabling channel at key frequencies**

| | | Minimum coupling attenuation dB | | | |
|---|---|---|---|---|---|
| Frequency MHz | | 30,0 | 100,0 | 250,0 | 600,0 |
| Class D | $E_1$ | 40,0 | 40,0 | N/A | N/A |
| | $E_2$ | 50,0 | 50,0 | N/A | N/A |
| | $E_3$ | 60,0 | 60,0 | N/A | N/A |
| Class E | $E_1$ | 40,0 | 40,0 | 32,0 | N/A |
| | $E_2$ | 50,0 | 50,0 | 42,0 | N/A |
| | $E_3$ | 60,0 | 60,0 | 52,0 | N/A |
| Class F | $E_1$ | 40,0 | 40,0 | 32,0 | 24,4 |
| | $E_2$ | 50,0 | 50,0 | 42,0 | 34,4 |
| | $E_3$ | 60,0 | 60,0 | 52,0 | 44,4 |

The measurement of coupling attenuation for installed cabling is under development. Coupling attenuation of a sample installation may be assessed by laboratory measurements of representative samples of channels assembled using the components, connector termination

--`,,```,,,,````-`-`,,`,,`,`,,`---

Copyright International Organization for Standardization
Provided by IHS under license with ISO
No reproduction or networking permitted without license from IHS Not for Resale

practices and installation practices in question. The laboratory testing of coupling attenuation is performed using the applicable part of IEC 61156.

### 6.3.3 Optical fibre cabling

#### 6.3.3.1 General

A given Class of optical fibre cabling channel is specified in such a way that it will support this Class of application when constructed from the appropriate type of optical fibre cables as detailed in Annex E.

This International Standard uses the optical fibre cabling channel Classes of clause 8 of ISO/IEC 11801 Ed.2 (2002), as given in the following list:

- Class OF-300 channels support applications listed in Annex E using all-silica optical fibre cables in accordance with 8.4.1 to a minimum of 300 m;
- Class OF-500 channels support applications listed in Annex E using all-silica optical fibre cables in accordance with 8.4.1 to a minimum of 500 m;
- Class OF-2000 channels support applications listed in Annex E using all-silica optical fibre cables in accordance with 8.4.1 to a minimum of 2 000 m.

In addition, this International Standard specifies the following Classes for optical fibre cabling channels:

- Class OF-25 channels support applications listed in Annex E using plastic optical fibre cable in accordance with 8.4.2 to a minimum of 25 m;
- Class OF-50 channels support applications listed in Annex E using plastic optical fibre cable in accordance with 8.4.2 to a minimum of 50 m;
- Class OF-100 channels support applications listed in Annex E using plastic or plastic clad silica optical fibre cables in accordance with 8.4.2 and 8.4.3 respectively, to a minimum of 100 m;
- Class OF-200 channels support applications listed in Annex E using plastic or plastic clad silica optical fibre cables in accordance with 8.4.2 and 8.4.3 respectively, to a minimum of 200 m;
- Class OF-5000 channels support applications listed in Annex E using all-silica optical fibre cable in accordance with 8.4.1 to a minimum of 5 000 m;
- Class OF-10000 channels support applications listed in Annex E using all-silica optical fibre cable in accordance with 8.4.1 to a minimum of 10 000 m.

The requirements for the wavelength multiplexing and de-multiplexing components will be found in the application standards. There are no special requirements for generic cabling concerning wavelength multiplexing.

#### 6.3.3.2 Channel attenuation

The channel attenuation shall not exceed the values shown in Table 9.

The attenuation of a channel shall be measured according to ISO/IEC 14763-3. The attenuation of channels at a specified wavelength shall not exceed the sum of the specified attenuation values for the components at that wavelength (where the attenuation of a length of optical fibre cable is calculated from its attenuation coefficient multiplied by its length).

Copyright International Organization for Standardization
Provided by IHS under license with ISO
No reproduction or networking permitted without license from IHS Not for Resale

**Table 9 – Channel attenuation of optical fibre cabling channels**

| Class | Constructed from optical fibre types of clause 8 | Maximum channel attenuation dB | | | |
|---|---|---|---|---|---|
| | | 650 nm | 850 nm | 1 300 nm | 1 550 nm |
| OF-25 | OP1, OP2 (see Note 1) | 8,0 | 4,0 (see Note 2) | 4,0 (see Note 2) | – |
| OF-50 | OP1, OP2 (see Note 1) | 13,0 | 5,0 (see Note 2) | 5,0 (see Note 2) | – |
| OF-100 | OP1, OP2, OH1 (see Note 1) | 23,0 | 7,0 (see Note 2)[3] | 7,0 (see Note 2) | – |
| OF-200 | OP2, OH1(see Note 1) | 23,0 | 11,0 | 11,0 | – |
| OF 300 | OM1, OM2, OM3, OS1, OS2 | See ISO/IEC 11801 | | | |
| OF 500 | OM1, OM2, OM3, OS1, OS2 | See ISO/IEC 11801 | | | |
| OF 2000 | OM1, OM2, OM3, OS1, OS2 | See ISO/IEC 11801 | | | |
| OF 5000 | OS1, OS2 | – | – | 4,0 (see Note 3) | 4,0 |
| OF 10000 | OS1, OS2 | – | – | 6,0 (see Note 3) | 6,0 |
| NOTE 1 The modal conditions under which the measurement is made are ffs. | | | | | |
| NOTE 2 Not applicable for channels implemented using OP1 of clause 8. | | | | | |
| NOTE 3 For singlemode channels the nominal wavelength is 1 310 nm. | | | | | |

#### 6.3.3.3 Assumptions regarding total connecting hardware attenuation within channels

##### 6.3.3.3.1 OF-25, OF-50, OF-100 and OF-200

The values in Table 9 are based on a total allocation of 3,0 dB for connections. Additional connectors and splices may be used if the optical power budget of the application allows.

##### 6.3.3.3.2 OF-300, OF-500 and OF-2000

See ISO/IEC 11801.

##### 6.3.3.3.3 OF-5000 and OF-10000

The values in Table 9 are based on a total allocation of 2,0 dB for connections. Additional connectors and splices may be used if the optical power budget of the application allows.

#### 6.3.3.4 Propagation delay

For some applications, knowledge of the delay of fibre channels is important to ensure compliance with end- to-end delay requirements of complex networks consisting of multiple cascaded channels. For this reason, it is important to know the lengths of the optical fibre channels. It is possible to calculate propagation delay based on cable performance (see clause 8).

## 7 Reference implementations

### 7.1 General

This clause describes implementations of generic cabling that utilise components referenced in clauses 8, 9 and 10. These reference implementations meet the requirements of clause 5 and, when installed in accordance with ISO/IEC 14763 (series) and IEC 61918, comply with

Copyright International Organization for Standardization
Provided by IHS under license with ISO
No reproduction or networking permitted without license from IHS Not for Resale

the channel transmission performance requirements of 6.3 when subjected to environmental conditions as defined by the applicable environmental Class(es) of 6.2.

Equivalent channel performance can be achieved over greater lengths by the use of fewer connections or by using components with higher performance.

## 7.2 Balanced cabling

### 7.2.1 General

See the requirements of 7.2.1 of ISO/IEC 11801. Where the temperature range exceeds the values defined in ISO/IEC 11801 the manufacturer's information shall be consulted regarding required reductions in cable length.

### 7.2.2 Intermediate cabling

7.2.2 of ISO/IEC 11801 Ed.2 (2002) specifies reference implementations for horizontal cabling. These reference implementations are applicable to intermediate cabling subject to the following:

- intermediate cabling does not include the concept of a CP;
- components used shall meet the environmental requirements of clauses 8, 9 and 10 of this International Standard.

### 7.2.3 Backbone cabling

7.2.3 of ISO/IEC 11801 specifies reference implementations for backbone cabling. Components used shall meet the environmental requirements of clauses 8, 9 and 10 of this International Standard.

## 7.3 Optical fibre cabling

### 7.3.1 General

Optical fibre channels shall be comprised of components that comply with clauses 8, 9 and 10. These clauses specify physical construction (core/cladding diameter and numerical aperture) and transmission performance. Within the reference implementations of this clause, the optical fibres used in each cabling channel shall have the same specification.

When more than one physical construction or cable Category is used in a cabling subsystem the cabling shall be marked to allow each cabling type to be clearly identified.

### 7.3.2 Component choice

The selection of optical fibre components will be determined by the channel lengths required and the applications to be supported. Refer to Annex E for guidance.

### 7.3.3 Maximum channel lengths

The maximum lengths of optical fibre cabling channels of a given Class are specified in 6.3.3.

Using the cables of 8.4 and mated connections in accordance with 9.5 and where the number of mated connections within the channel exceeds two, the channel length shall be reduced by the length differentials of Table 10 for each additional connection. In addition, where splices in accordance with 9.5 are included, the channel length shall be reduced by the length differentials of Table 10 for each additional splice.

For a given length of channel, additional connections may be used if the optical power budget of the application allows it (see Annex E).

Copyright International Organization for Standardization
Provided by IHS under license with ISO
No reproduction or networking permitted without license from IHS Not for Resale

**Table 10 – Optical fibre channel length equivalence for connecting hardware**

| OF cable | Applicable channel Class | Channel length differential (m) | | | | | |
|---|---|---|---|---|---|---|---|
| | | Wavelength (nm) | 650 | 850 | 1 300 | 1 310 | 1 550 |
| OP1 | OF-25, OF-50, OF-100 | Mated connection | 7,5 | – | – | – | – |
| | | Splice | | – | – | – | – |
| OP2 | OF-25, OF-50, OF-100, OF-200 | Mated connection | 15,0 | 37,5 | 37,5 | – | – |
| | | Splice | – | – | – | – | – |
| OH1 | OF-100, OF-200 | Mated connection | – | 150,0 | 150,0 | – | – |
| | | Splice | – | – | – | – | – |
| OM1/OM2/OM 3 | OF-300, OF-500, OF-2000 | Mated connection | – | 214,0 | 500,0 | – | – |
| | | Splice | – | 90,0 | 200,0 | – | – |
| OS1 | OF-300, OF-500, OF-2000 | Mated connection | – | – | – | 750,0 | 750,0 |
| | | Splice | – | – | – | 300,0 | 300,0 |
| OS2 | OF-300, OF-500, OF-2000, OF-5000, OF-10000 | Mated connection | – | – | – | 1 875,0 | 1 875,0 |
| | | Splice | – | – | – | 750,0 | 750,0 |

# 8 Cable requirements

## 8.1 Introduction

This clause provides guidelines and requirements for cables used with generic cabling.

## 8.2 Operating environment

For each M, I, C or E group, the classification of a given environment is determined by the most demanding parameter within the M, I, C or E group. However, the selection of components shall be based on the specific demands of each of the parameters within the M, I, C or E group, which may be less demanding than the overall classification of the group.

In general, conformance to the limits and test methods specified by, and product specifications referenced in this clause for individual transmission parameters cannot be considered to provide assurance of performance when simultaneously subjected to the full range of environmental conditions of a given environmental classification.

It is assumed that if a channel is constructed entirely of components meeting requirements based on a $M_1I_1C_1E_1$ classification, according to the reference implementations of clause 7, then the required channel transmission performance is achieved in a $M_1I_1C_1E_1$ environment based upon a statistical approach of performance modelling.

The maintenance of functional performance under specific combinations of environmental conditions within a given environmental classification of Table 2 should be indicated by the supplier. Agreement shall be reached between customer and supplier that the product maintains transmission performance when subjected to specific combinations of environmental conditions.

Copyright International Organization for Standardization
Provided by IHS under license with ISO
No reproduction or networking permitted without license from IHS Not for Resale

### 8.3 Balanced cables

Balanced cables shall meet the requirements of Category 5, 6 or 7 cable referenced in ISO/IEC 11801 as appropriate in conjunction with a completed detail specification using IEC 61156-5-1 and IEC 61156-6-1.

Detail specifications based upon the blank detail specifications IEC 61156-5-1 and IEC 61156-6-1 shall be used to specify cable performance requirements under the environmental classifications of Table 2. Table 11 shows the elements of Table 2 that are not covered by these blank detail specifications and have to be specified separately.

**Table 11 – Environmental performance specifications for balanced cables (in addition to IEC 61156-5-1 and IEC 61156-6-1)**

| **Mechanical** | **$M_1$** | **$M_2$** | **$M_3$** | **Reference** |
|---|---|---|---|---|
| Bending | As required | As required | As required | IEC 62012-1 |
| Flexing (flexible cables) | As required | As required | As required | IEC 62012-1 |
| Torsion (flexible cables) | As required | As required | As required | IEC 62012-1 |
| **Climatic and chemical** | **$C_1$** | **$C_2$** | **$C_3$** | |
| Solar radiation | na | ffs | ffs | |
| Oil resistance | As required | As required | As required | IEC 62012-1 |
| a) Cables shall maintain mechanical and electrical performance during exposure to the relevant environmental conditions described in Table 2<br>b) Although not contained in Table 2 “weld splatter” may also be considered during the development of a detail specification. | | | | |

### 8.4 Optical fibre cables

#### 8.4.1 All-silica optical fibre cables

Multimode optical fibre cables shall meet the requirements of OM1, OM2 and OM3 cable referenced in ISO/IEC 11801, as appropriate, in conjunction with a completed detail specification based upon those within IEC 60794-2 or IEC 60794-3, as appropriate.

Singlemode optical fibre cables shall meet the requirements of OS1 cables specified in ISO/IEC 11801 or OS2 cables specified in Table 12, as appropriate, in conjunction with a completed detail specification based upon those within IEC 60794-2 or IEC 60794-3, as appropriate.

Detail specifications based upon the blank detail specifications of IEC 60794-2 or IEC 60794-3 shall be used to specify cable performance requirements under the environmental classifications of Table 2. Table 13 shows the elements of Table 2 that are not covered by these blank detail specifications and which have to be specified separately.

Copyright International Organization for Standardization
Provided by IHS under license with ISO
No reproduction or networking permitted without license from IHS Not for Resale

**Table 12 – Singlemode optical fibre cable (Category OS2) performance requirements**

| **Wavelength** nm | **Maximum attenuation** dB/km |
|---|---|
| 1 310 | 0,4 |
| 1 383 | 0,4 |
| 1 550 | 0,4 |
| a) The optical fibre shall comply with B1.3 fibre of IEC 60793-2-50. | |
| b) The attenuation shall be measured in accordance with IEC 60793-1-40. | |
| c) The cut-off wavelength of singlemode optical fibre cables shall be less than 1 260 nm when measured in accordance with IEC 60793-1-44. | |

**Table 13 – Environmental performance specifications for optical fibre cables (in addition to IEC 60794-2 and IEC 60794-3)**

| **Mechanical** | **$M_1$** | **$M_2$** | **$M_3$** | **Reference** |
|---|---|---|---|---|
| Bending | As required | As required | As required | IEC 60794-1-2 |
| Flexing | As required | As required | As required | IEC 60794-1-2 |
| Torsion | As required | As required | As required | IEC 60794-1-2 |
| Solar radiation | na | ffs | ffs | ffs |
| **Climatic and chemical** | **$C_1$** | **$C_2$** | **$C_3$** | |
| Solar radiation | na | ffs | ffs | |
| Oil resistance | As required | As required | As required | IEC 60794-1-2 |
| a) Cables shall maintain mechanical and optical performance during exposure to the relevant environmental conditions described in Table 2. | | | | |
| b) Any optical fibre cables containing metallic elements shall be subjected to the voltage proof test applied to balanced cables. | | | | |
| c) Although not contained in Table 2 “weld splatter” may also be considered during the development of a detail specification. | | | | |

### 8.4.2 Plastic optical fibre cables

OP1 optical fibre shall have an outer cladding diameter of nominal 1 000 µm cladding diameter in accordance with A4d IEC 60793-2-40. Each optical fibre in the cable shall meet the performance requirements of Table 14. Both attenuation and modal bandwidth shall be measured in accordance with IEC 60793-1-40 and IEC 60793-1-41, respectively.

OP2 optical fibre shall be multimode, plastic optical fibre with nominal 490 µm cladding diameter in accordance with A4f fibre of IEC 60793-2-40. Each optical fibre in the cable shall meet the performance requirements of Table 14. Both attenuation and modal bandwidth shall be measured in accordance with IEC 60793-1-40 and IEC 60793-1-41 respectively.

--`,,```,,,,````-`-`,,`,,`,`,,`---

Copyright International Organization for Standardization
Provided by IHS under license with ISO
No reproduction or networking permitted without license from IHS Not for Resale

**Table 14 – Optical fibre cable performance requirements**

| Category | Maximum attenuation dB/km (mode distribution ffs) | | | Minimum modal bandwidth MHz·km | | |
|---|---|---|---|---|---|---|
| | 650 nm | 850 nm | 1 300 nm | 650 nm | 850 nm | 1 300 nm |
| OP1 | 200 | na | na | 10 | na | na |
| OP2 | 100 | 40 | 40 | 80 | 150 | 150 |
| OH1 | ffs | 10 | ffs | ffs | 5 | ffs |
| NOTE Although the attenuation and the modal bandwidth values are quoted in dB/km and MHz·km respectively, the qualification measurement may be carried out using 100 m lengths. | | | | | | |

Plastic optical fibre cables shall meet the requirements of OP1 or OP2 cables specified in Table 14 as appropriate when subject to the applicable environmental classification of Table 2.

### 8.4.3 Plastic clad silica optical fibre cables

The optical fibre shall be multimode optical fibre with nominal 200/230 µm core/cladding diameter complying with A3c fibre of IEC 60793-2-30. Each optical fibre in the cable shall meet the performance requirements of the Category OH1 in Table 14. Both attenuation and modal bandwidth shall be measured in accordance with IEC 60793-1-40 and IEC 60793-1-41, respectively.

Plastic clad silica optical fibre cables shall meet the requirements of OH1 cables specified in Table 14 when subject to the applicable environmental classification of Table 2.

### 8.4.4 Propagation delay

A conservative conversion value for unit propagation delay of 5,00 ns/m (0,667 c) may be used. This value can be used to calculate channel delay without verification (see clause 7).

## 9 Connecting hardware requirements

### 9.1 Introduction

This clause provides guidelines and requirements for connecting hardware used with generic cabling. For the purposes of this clause, connecting hardware (sometimes referred to as a connection) is considered to consist of a device or a combination of devices used to connect cables or cable elements. For the purpose of this clause, a connector is a component normally attached to a cable or mounted on an enclosure (excluding an adapter) for joining separable parts of a cabling system. Unless otherwise specified, this International Standard specifies the minimum requirements of mated connectors as part of a permanent link or channel. These requirements apply to individual connectors, which include TOs, patch panels, bulkhead connectors, splices and cross-connects. Performance requirements do not include the effects of cross-connect jumpers or patch cords. Requirements for balanced cords are provided in clause 10.

For the purpose of this clause the environmental requirements apply to connections (including connections to application-specific equipment).

This clause uses connecting hardware as specified in clause 8 of ISO/IEC 11801, with additional requirements as described in the following subclauses.

Copyright International Organization for Standardization
Provided by IHS under license with ISO
No reproduction or networking permitted without license from IHS Not for Resale

NOTE This clause does not address requirements for devices with passive or active electronic circuitry, including those whose main purpose is to serve a specific application or to provide compliance with other rules and regulations. Examples include media adapters, impedance matching transformers, terminating resistors, LAN equipment, filters and protection apparatus. Such devices are considered to be outside the scope of generic cabling and may have significant detrimental effects on network performance. Therefore, it is important that their compatibility with the cabling system and equipment be considered before use.

## 9.2 General requirements

### 9.2.1 Location

Connecting hardware is installed

a) in a campus distributor permitting connections to the building backbone and the campus backbone cabling and equipment (if provided),

b) in a building distributor permitting connections to the building backbone cabling and equipment (if provided),

c) in a floor distributor providing the cross-connections between the building backbone and the floor cabling and permitting connections to equipment (if provided),

d) in an intermediate distributor providing the cross-connections between the floor and intermediate cabling and permitting connections to equipment (if provided),

e) at/for/in bulkheads,

f) at the TO,

g) in the building entrance facility.

Connecting hardware shall be compatible with the environment at its intended location as defined by the classification of 6.2.

### 9.2.2 Design

In addition to its primary purpose, connecting hardware should be designed to provide

a) a means to identify cabling for installation and administration as described in ISO/IEC 14763-1,

b) a means to permit orderly cable management,

c) a means of access to monitor or test cabling and equipment,

d) protection against physical damage and ingress of contaminants,

e) a termination density that is space efficient, but that also provides ease of cable management and ongoing administration of the cabling system,

f) a means to accommodate screening and bonding requirements, when applicable.

When connections of the same mechanical type as the TO are used at the campus distributor, building distributor, floor distributor or intermediate distributor, they shall meet the transmission requirements as those specified for the TO, and they shall meet the environmental requirements as specified at that location.

It shall be possible to protect connecting hardware in a non-mated state to meet the stated environmental class of clause 6. Such protection may take the form of blind inserts, protective caps or overall enclosures of the connection or connections.

### 9.2.3 Mounting

Connecting hardware should be designed to provide flexibility for mounting, either directly or by means of an adapter plate or enclosure (e.g., on walls, in walls, in racks or on other types of distribution frames, bulkheads and mounting fixtures).

Copyright International Organization for Standardization
Provided by IHS under license with ISO
No reproduction or networking permitted without license from IHS Not for Resale

### 9.2.4 Marking and colour coding

Connecting hardware shall be marked or colour coded for identification purposes. The means of identification shall indicate transmission and environmental performance in accordance with this clause. The means of identification may be an element of the administration system.

Where a protective housing prevents the identification of the connecting hardware type, the protective housing shall be suitably marked or colour coded.

## 9.3 Operating environment

For each M, I, C or E group, the classification of a given environment is determined by the most demanding parameter within the M, I, C or E group. However, the selection of components shall be based on the specific demands of each of the parameters within the M, I, C or E group, which may be less demanding than the overall classification of the group.

In general, conformance to the limits and test methods specified by, and product specifications referenced in, this clause for individual transmission parameters cannot be considered to provide assurance of performance when simultaneously subjected to the full range of environmental conditions of a given environmental classification.

It is assumed that if a channel is constructed entirely of components meeting requirements based on a $M_1I_1C_1E_1$ classification according to the reference implementations of clause 7 then the required channel transmission performance is achieved in a $M_1I_1C_1E_1$ environment based upon a statistical approach of performance modelling.

The maintenance of functional performance under specific combinations of environmental conditions within a given environmental classification of Table 2 should be indicated by the supplier. Agreement shall be reached between customer and supplier that the product maintains transmission performance when subjected to specific combinations of environmental conditions.

## 9.4 Connecting hardware for balanced cabling

### 9.4.1 General requirements

The following requirements apply to all connecting hardware used to provide electrical connections with balanced cables that comply with the requirements of clause 8.

### 9.4.2 Performance marking

Connecting hardware intended for use with balanced cabling should be marked to designate transmission performance at the discretion of the manufacturer. The markings, if any, shall be visible during installation.

### 9.4.3 Operating environment

Connecting hardware shall meet the mechanical and transmission performance requirements of ISO/IEC 11801 as appropriate in conjunction with the performance requirements detailed in Table 15 for the relevant environmental classifications of Table 2.

--`,,```,,,,````-`-`,,`,,`,`,,`---

Copyright International Organization for Standardization
Provided by IHS under license with ISO
No reproduction or networking permitted without license from IHS Not for Resale

**Table 15 – Environmental performance specifications for balanced cabling connecting hardware**

| **Mechanical** | **$M_1$** | **$M_2$** | **$M_3$** | **Reference** |
|---|---|---|---|---|
| Bump | See a) | See a) | See a) | IEC 60512-6-2 |
| Shock | See a) | See a) | See a) | IEC 60512-6-3 |
| Vibration sinusoidal | See a) | See a) | See a) | IEC 60512-6-4 |
| Tensile strength, free connector to cable | 25 N (ffs) | 300 N (ffs) | 500 N (ffs) | IEC 60512-8 Test 16d |
| Cable clamp resistance to cable torsion | See b) | See b) | See b) | IEC 60512-9 Test 17d |
| Cable clamp resistance to rotation | See b) | See b) | See b) | IEC 60512-9 Test 17d |
| **Ingress** | **$I_1$** | **$I_2$** | **$I_3$** | |
| Particulate | IP 2X | IP 6X | IP 6X | IEC 60529 |
| Liquid / Immersion | IP X0 | IP X5 | IP X5 and X7 | IEC 60529 |
| **Climatic and chemical** | **$C_1$** | **$C_2$** | **$C_3$** | |
| Ambient temperature | See a) | See a) | See a) | IEC 60512-11-9 and IEC 60512-11-10 |
| Rapid change of temperature | See a) | See a) | See a) | IEC 60512-11-4 |
| Solar radiation | See a) | See a) | See a) | ffs |
| Damp heat cyclic | See a) | See a) | See a) | IEC 60512-11-12 |
| Fluid resistance | See a) | See a) | See a) | IEC 60512-19-3 |
| Flowing mixed gas corrosion test | See a) | See a) | See a) | IEC 60512-11-7 |
| **Electromagnetic** | **$E_1$** | **$E_2$** | **$E_3$** | |
| Shielding effectiveness | See a) | See a) | See a) | IEC 60512-23-3, and IEC 60512-4-2 for partial discharge |
| RF | See a) | See a) | See a) | IEC 60512-23-3 |
| Voltage proof | See a) | See a) | See a) | IEC 60512-4-1 |

a) Connecting hardware shall maintain mechanical and electrical performance during exposure to the relevant environmental conditions described in Table 2.

b) Connecting hardware shall maintain mechanical and electrical performance during exposure to the relevant environmental conditions.

c) Although not contained in Table 2 “weld splatter” may also be considered during the development of a detail specification.

### 9.4.4 Mechanical and electrical characteristics of balanced connecting hardware

#### 9.4.4.1 General

Connecting hardware shall meet the general requirements of this clause and the mechanical and electrical requirements specified in ISO/IEC 11801.

#### 9.4.4.2 Mechanical characteristics of balanced connecting hardware using 4 pairs at the TO

Where required by the design or the environmental classification of the location, the protective housing shall meet the general requirements of this clause and the mechanical and physical requirements of IEC 61076-3-106, Variant 4.

--`,,```,,,,````-`-`,,`,,`,`,,`---

Copyright International Organization for Standardization
Provided by IHS under license with ISO
No reproduction or networking permitted without license from IHS Not for Resale

Where connections provide dedicated support for applications specified by IEC 61918, the Automation Outlet (AO) interfaces of IEC 61918 should be used120.

Pin and pair grouping assignments shall be as shown in Figure 10. All unused pairs within the same cable sheath shall be terminated to match the nominal impedance of the cable.

Pair rearrangement at the TO should not involve modification of the intermediate cable terminations. If pair rearrangement is used at the TO, the configuration of the outlet terminations shall be clearly identified.

When two physically similar cabling links are used in the same installation (for example, different performance categories and cables with different nominal impedance) special precautions are required to ensure that they are properly identified.

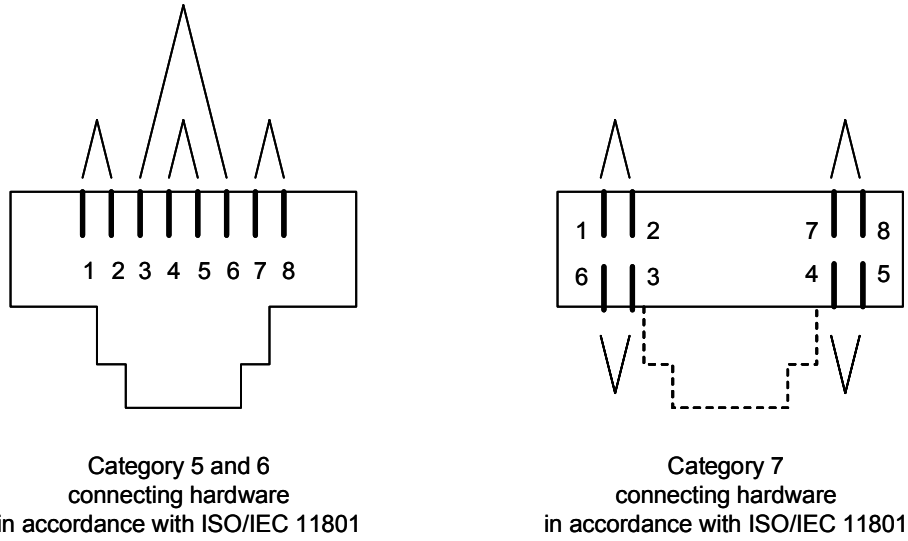


**Figure 10 – Eight position jack pin and pair grouping assignments (front view of connector)**

#### 9.4.4.3 Mechanical characteristics of balanced connecting hardware using 2 pairs at the TO

Where a smaller housing is required and where the provision of only two balanced pairs is acceptable, connecting hardware meeting the mechanical and physical requirements of IEC 61076-2-101 Type D with 4 poles may also be used as an alternative to that specified in 9.4.4.2.

Pin and pair grouping assignments shall be as shown in Figure 11.

When two physically similar cabling links are used in the same installation (for example, different performance categories and cables with different nominal impedance) special precautions are required to ensure that they are properly identified.

Copyright International Organization for Standardization
Provided by IHS under license with ISO
No reproduction or networking permitted without license from IHS
Not for Resale

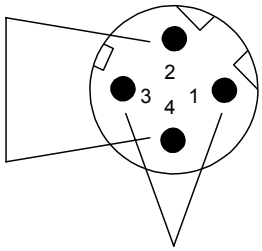


**Figure 11 – Four position jack pin and pair grouping assignments (front view of connector)**

## 9.5 Connecting hardware for optical fibres

### 9.5.1 Operating environment

Connecting hardware shall meet the mechanical and transmission performance requirements of ISO/IEC 11801 as appropriate in conjunction with the performance requirements detailed in Table 16 for the relevant environmental classifications of Table 2.

**Table 16 – Environmental performance specifications for optical fibre cabling connecting hardware**

| **Mechanical** | **$M_1$** | **$M_2$** | **$M_3$** | **Reference** |
|---|---|---|---|---|
| Bump | See a) | See a) | See a) | New requirements under consideration |
| Shock | See a) | See a) | See a) | IEC 61300-2-9 |
| Vibration sinusoidal | See a) | See a) | See a) | IEC 61300-2-1 |
| Tensile strength, Free connector to cable | 25 N (ffs) | 300 N (ffs) | 500 N (ffs) | IEC 61300-2-4 |
| Cable clamp resistance to cable torsion | See b) | See b) | See b) | IEC 61300-2-5 |
| Cable clamp resistance to rotation | See b) | See b) | See b) | IEC 61300-2-44 |
| **Ingress** | **$I_1$** | **$I_2$** | **$I_3$** | |
| Particulate | IP 2X | IP 6X | IP 6X | Under consideration |
| Liquid / Immersion | IP X0 | IP X5 | IP X5 and X7 | Under consideration |
| **Climatic and chemical** | **$C_1$** | **$C_2$** | **$C_3$** | |
| Ambient temperature | See a) | See a) | See a) | IEC 61300-2-18 |
| Rapid change of temperature | See a) | See a) | See a) | IEC 61300-2-22 |
| Solar radiation | See a) | See a) | See a) | IEC 61300-2-30 |
| Damp heat cyclic | See a) | See a) | See a) | IEC 61300-2-46 |
| Fluid resistance | See a) | See a) | See a) | IEC 61300-2-34 |
| Flowing mixed gas corrosion test | See a) | See a) | See a) | New requirements under consideration |

a) Connecting hardware shall maintain mechanical and optical performance during exposure to the relevant environmental conditions described in Table 2.

b) Connecting hardware shall maintain mechanical and optical performance during exposure to the relevant environmental conditions.

c) Although not contained in Table 2 “weld splatter” may also be considered during the development of a detail specification.

Copyright International Organization for Standardization
Provided by IHS under license with ISO
No reproduction or networking permitted without license from IHS Not for Resale

### 9.5.2 Connecting hardware for all-silica optical fibres

#### 9.5.2.1 General requirements

The following requirements together with the general requirements of this clause apply to all connecting hardware used to provide optical connections with all-silica optical fibres that comply with the requirements of clause 8.

Connecting hardware shall meet the requirements of this clause and the mechanical and optical requirements specified in ISO/IEC 11801.

#### 9.5.2.2 Marking and colour coding

The connectors and adaptors should be coloured to distinguish between singlemode and multimode optical fibres.

Additional colours or labels may be required to distinguish between the optical fibre types. In addition, keying and the identification of fibre positions may be used to ensure that correct polarity is maintained for duplex links.

NOTE 1 These markings are in addition to, and do not replace, other markings specified in ISO/IEC 14763-1, or those required by local codes or regulations.

NOTE 2 The following colour codes apply for IEC 61754-20 (LC connectors):

| | |
|---|---|
| Multimode 50 µm and 62,5 µm: | Beige |
| Singlemode PC: | Blue |
| Singlemode APC: | Green |

#### 9.5.2.3 Mechanical characteristics of all-silica optical fibre connecting hardware at the TO

The connecting hardware shall be as specified in IEC 61754-20 (LC connector family).

Where required by the design or the environmental classification of the location, the protective housing shall meet the general requirements of this clause and the mechanical and physical requirements of IEC 61076-3-106 Variant 4 by use of appropriate inserts IEC 61754-20 (all standard interfaces).

Where connections provide dedicated support for applications specified in IEC 61918, the AO interfaces of IEC 61918 should be used.

### 9.5.3 Connecting hardware for plastic optical fibres

#### 9.5.3.1 General requirements

The following requirements together with the general requirements of this clause apply to all connecting hardware used to provide optical connections with plastic optical fibres that comply with the requirements of clause 8.

#### 9.5.3.2 Optical characteristics

The insertion loss of a mated connection shall not exceed 1,5 dB when measured in accordance with IEC 61300-3-34. The modal conditions under which the measurement is made are for further study.

#### 9.5.3.3 Marking and colour coding

The connectors and adaptors should be coloured to distinguish between optical fibre types. In addition, keying and the identification of fibre positions may be used to ensure that correct polarity is maintained for duplex links.

Copyright International Organization for Standardization
Provided by IHS under license with ISO
No reproduction or networking permitted without license from IHS Not for Resale

NOTE These markings are in addition to, and do not replace, other markings specified in ISO/IEC 14763-1, or those required by local codes or regulations.

#### 9.5.3.4 Mechanical characteristics of plastic optical fibre connecting hardware at the TO

The connecting hardware shall be as specified in IEC 61754-20 (LC connector family).

Where required by the design or the environmental classification of the location, the protective housing shall meet the general requirements of this clause and the mechanical and physical requirements of IEC 61076-3-106, Variant 4 by use of appropriate inserts, see IEC 61754-20 (all standard interfaces).

Where connections provide dedicated support for applications specified by IEC 61918, the AO interfaces of IEC 61918 should be used.

### 9.5.4 Connecting hardware for plastic clad silica fibres

#### 9.5.4.1 General requirements

The following requirements together with the general requirements of this clause apply to all connecting hardware used to provide optical connections with plastic clad silica optical fibres that comply with the requirements of clause 8.

#### 9.5.4.2 Optical characteristics

The insertion loss of a mated connection shall not exceed 1,5 dB when measured in accordance with IEC 61300-3-34. The modal conditions under which the measurement is made are for further study.

#### 9.5.4.3 Marking and colour coding

The connectors and adaptors should be coloured to distinguish between optical fibre types. In addition, keying and the identification of fibre positions may be used to ensure that correct polarity is maintained for duplex links.

NOTE These markings are in addition to, and do not replace, other markings specified in ISO/IEC 14763-1, or those required by local codes or regulations.

#### 9.5.4.4 Mechanical characteristics of plastic clad silica fibre connecting hardware at the TO

The connecting hardware shall be as specified in IEC 61754-20 (LC connector family).

Where required by the design or the environmental classification of the location, the protective housing shall meet the general requirements of this clause and the mechanical and physical requirements of IEC 61076-3-106 Variant 4 by use of appropriate inserts, see IEC 61754-20 (all standard interfaces).

Where connections provide dedicated support for applications specified by IEC 61918, the AO interfaces of IEC 61918 should be used.

Copyright International Organization for Standardization
Provided by IHS under license with ISO
No reproduction or networking permitted without license from IHS Not for Resale

# 10 Cords

## 10.1 General

The performance of channels is dependent upon the performance of cords. The moves, additions and changes made using cords represent a greater risk to operational channel performance than that of installed intermediate, floor or backbone cables.

This clause specifies the requirements for terminated cables used as apparatus attachment cords, equipment cords and patch cords within intermediate, floor and backbone cabling.

The use of cables and connecting hardware suitable for use when subject to certain environmental conditions does not automatically assure that the cord meets the applicable transmission performance of this clause when subjected to those environment conditions.

## 10.2 Operating environment

For each M, I, C or E group, the classification of a given environment is determined by the most demanding parameter within the M, I, C or E group. However, the selection of components shall be based on the specific demands of each of the parameters within the M, I, C or E group, which may be less demanding than the overall classification of the group.

In general, conformance to the limits and test methods specified by, and product specifications referenced in, this clause for individual transmission parameters cannot be considered to provide assurance of performance when simultaneously subjected to the full range of environmental conditions of a given environmental classification.

It is assumed that if a channel is constructed entirely of components meeting requirements based on a $M_1I_1C_1E_1$ classification, according to the reference implementations of clause 7, then the required channel transmission performance is achieved in a $M_1I_1C_1E_1$ environment based upon a statistical approach of performance modelling.

The maintenance of functional performance under specific combinations of environmental conditions within a given environmental classification of Table 2 should be indicated by the supplier. Agreement shall be reached between customer and supplier that the product maintains transmission performance when subjected to specific combinations of environmental conditions.

## 10.3 Balanced cords

### 10.3.1 General

This subclause specifies the minimum requirements for balanced cords used in the intermediate, floor and backbone channels specified in clause 5.

Cords shall be assembled using flexible cables in accordance with 8.3 and connectors in accordance with clause 9 with the exception of the equipment connectors used on apparatus attachment and equipment cords that lie outside the scope of this International Standard.

The construction of the flexible cables shall reflect the specified bend radius and any requirements for repetitive bending/flexing of the cord during installation and operation.

The cable and, where appropriate, cable screens, shall be fitted to the connectors following the procedures and using the tools specified by the manufacturers of the connecting hardware.

Copyright International Organization for Standardization
Provided by IHS under license with ISO
No reproduction or networking permitted without license from IHS Not for Resale

The connecting hardware and the interconnected pin assignment shall be in accordance with the intended use of the cord and shall be a logical extension to the cabling interface(s) to which it is to be connected.

Balanced cables shall meet the requirements of Category 5, 6 or 7 cable, as appropriate, referenced in ISO/IEC 11801 in conjunction with a completed detail specification using IEC 61156-6-1 (see 8.3).

Connecting hardware shall meet the mechanical and transmission performance requirements of 9.4 in conjunction with the performance requirements detailed in Table 15 for the relevant environmental classifications of Table 2.

### 10.3.2 Cable insertion loss

Most IEC 60603-7 connecting hardware are limited to maximum insulated conductor diameters of 1,02 mm. For cables containing stranded conductors the insulated conductor diameter influences the maximum conductor diameter for a given cable construction which, in turn, influences the insertion loss of the cable.

The maximum insertion loss ratio of flexible cables in accordance with 8.3, defined as their insertion loss (dB/100 m) compared to that of installation cables, is 1,5. However, cable constructions having insertion loss ratios below 1,5 are supported by the reference implementation rules of clause 7.

The maintenance of channel performance requires that flexible cables of the correct insertion loss ratio shall be used as defined by the implementation rules.

### 10.3.3 Identification

Each cord shall be identified to indicate:

- length;
- the design attenuation ratio of the cable;
- category of cable;
- wire-map status where a direct pin-pin relationship does not exist (i.e. cross-over cords).

### 10.3.4 Operating environment

Detail specifications based upon the blank detail specification IEC/PAS 61935-2-20 (see bibliography) shall be used to specify cord performance requirements under the environmental classifications of Table 2. Table 17 shows the elements of Table 2 that are not covered by these blank detail specifications and which have to be specified separately.

--`,,```,,,,````-`-`,,`,,`,`,,`---

Copyright International Organization for Standardization
Provided by IHS under license with ISO
No reproduction or networking permitted without license from IHS Not for Resale

**Table 17 – Environmental performance specifications for balanced cords (in addition to IEC/PAS 61935-2-20)**[a)]

| **Mechanical** | **$M_1$** | **$M_2$** | **$M_3$** | **Reference** |
|---|---|---|---|---|
| Tensile strength, free connector to cable | 25 N (ffs) | 300 N (ffs) | 500 N (ffs) | |
| Cable clamp resistance to cable torsion | Note 1 | Note 1 | Note 1 | |
| Cable clamp resistance to rotation | Note 1 | Note 1 | Note 1 | |
| Bending and flexing | Note 1 | Note 1 | Note 1 | |
| ffs | | | | |
| **Ingress** | **$I_1$** | **$I_2$** | **$I_3$** | |
| ffs | | | | |
| **Climatic and chemical** | **$C_1$** | **$C_2$** | **$C_3$** | |
| Oil resistance | As required | As required | As required | |
| ffs | | | | |
| **Electromagnetic** | **$E_1$** | **$E_2$** | **$E_3$** | |
| ffs | | | | |
| NOTE 1 Cables shall maintain functional performance during exposure to the relevant environmental conditions described in Table 2 | | | | |
| NOTE 2 Although not contained in Table 2 “weld splatter” may also be considered during the development of a detail specification | | | | |
| a) See bibliography for this reference. | | | | |

### 10.3.5 Electrical performance requirements for patch cords

#### 10.3.5.1 Insertion loss

Insertion loss measurements of cords shall not exceed the insertion loss requirements of the connection at each end plus the insertion loss requirement for the cable, scaled for length. The insertion loss performance is achieved by design.

#### 10.3.5.2 Return loss

See ISO/IEC 11801.

#### 10.3.5.3 Near-end crosstalk loss (NEXT)

When measured in accordance with IEC 61935-2, cords shall meet the NEXT requirements of 5.7.5 of IEC 61935-2.

### 10.4 Optical fibre cords

#### 10.4.1 General

This clause specifies the minimum requirements for optical cords used in the intermediate, floor and backbone channels specified in clause 5.

Cords shall be assembled using flexible cables in accordance with 8.4 and connectors in accordance with clause 9 with the exception of the equipment connectors used on apparatus attachment and equipment cords that lie outside the scope of this International Standard.

Copyright International Organization for Standardization
Provided by IHS under license with ISO
No reproduction or networking permitted without license from IHS Not for Resale

The construction of the flexible cables shall reflect the specified bend radius and any requirements for repetitive bending/flexing of the cord during installation and operation.

The cable shall be fitted to the connectors following the procedures and using the tools specified by the manufacturers of the connections.

The connecting hardware and the means of maintaining polarity within the cord shall be in accordance with the intended use of the cord and shall be a logical extension to the cabling interface(s) to which it is to be connected.

Optical fibre cables shall meet the requirements of

- Category OM1, OM2, OM3 or OS1 as specified in ISO/IEC 11801,

or

- OS2, OP1, OP2 or OH1 as specified in 8.4,

as appropriate, in conjunction with the relevant completed detail specification (see 8.4).

Connecting hardware shall meet the mechanical and transmission performance requirements of 9.5 in conjunction with the performance requirements detailed in Table 16 for the relevant environmental classifications of Table 2.

### 10.4.2 Identification

Each cord shall be identified to indicate:

- length;
- the core diameter;
- Category of cable;
- port-map status where a direct port-port relationship does not exist (i.e. cross-over cords).

### 10.4.3 Performance requirements for patch cords

#### 10.4.3.1 Attenuation/insertion loss

Attenuation/insertion loss measurements of cords shall not exceed the attenuation/insertion loss requirements of the connection at each end plus the attenuation/insertion loss requirement for the cable, scaled for length. The attenuation/insertion loss performance is achieved by design.

### 10.4.4 Operating environment

Detail specifications based upon the performance specifications in the IEC 61753 series shall be used to specify cord performance requirements under the environmental classifications of Table 2. Table 18 shows the elements of Table 2 that are not covered by these IEC 61753 series and which have to be specified separately.

Copyright International Organization for Standardization
Provided by IHS under license with ISO
No reproduction or networking permitted without license from IHS Not for Resale

**Table 18 – Environmental performance specifications for optical fibre cords (in addition to IEC 61753-X)**

| **Mechanical** | **$M_1$** | **$M_2$** | **$M_3$** | **Reference** |
|---|---|---|---|---|
| Tensile strength, Free connector to cable | 25 N (ffs) | 300 N (ffs) | 500 N (ffs) | |
| Cable clamp resistance to cable torsion | See a) | See a) | See a) | |
| Cable clamp resistance to rotation | See a) | See a) | See a) | |
| Bending and flexing | See a) | See a) | See a) | |
| ffs | | | | |
| **Ingress** | **$I_1$** | **$I_2$** | **$I_3$** | |
| ffs | | | | |
| **Climatic and chemical** | **$C_1$** | **$C_2$** | **$C_3$** | |
| Oil resistance | As required | As required | As required | |
| ffs | | | | |
| **Electromagnetic** | **$E_1$** | **$E_2$** | **$E_3$** | |
| ffs | | | | |

a) Cables shall maintain functional performance during exposure to the relevant environmental conditions described in Table 2.

b) Although not contained in Table 2 “weld splatter” may also be considered during the development of a detail specification.

Copyright International Organization for Standardization
Provided by IHS under license with ISO
No reproduction or networking permitted without license from IHS Not for Resale

# Annex A
(normative)

# Permanent link performance limits

## A.1 General

This annex contains performance requirement formulae for permanent links, as shown in Figure A.1, and relates to Annex A of ISO/IEC 11801.

The cabling under test in Configurations A, B and C is termed the permanent link:

In all configurations the test configuration reference plane of a link is within the test cord cable next to, and including, the test cord connection which mates to the termination point of the link under test.

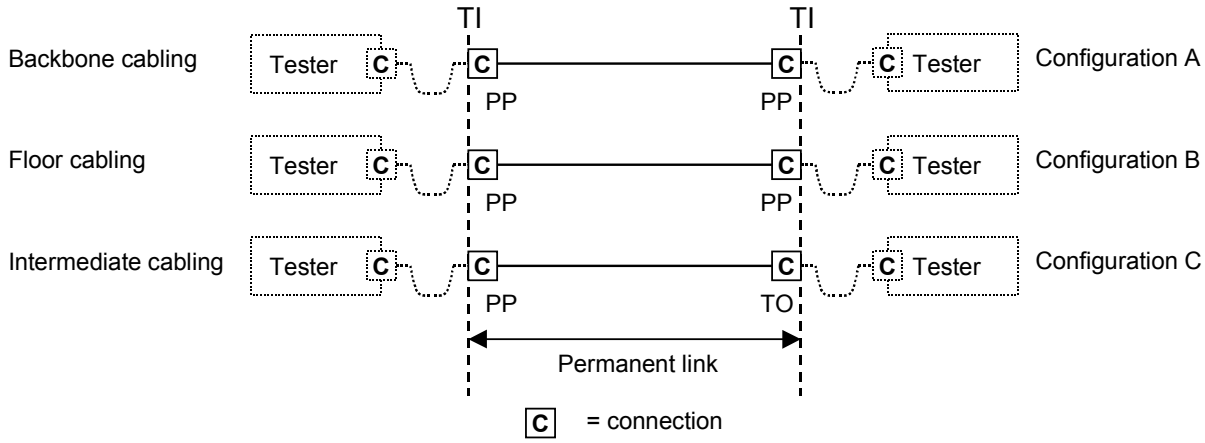


**Figure A.1 – Permanent link options**

## A.2 Balanced cabling

### A.2.1 General

The parameters specified in this Annex apply to balanced permanent links with screened or unscreened cable elements, with or without an overall screen, unless explicitly stated otherwise. The nominal impedance of balanced permanent links is 100 Ω. This is achieved by suitable design and appropriate choice of cabling components (irrespective of their nominal impedance).

Consideration should be given to measuring performance at worst case temperatures or calculating worst case performance based on measurements made at other temperatures.

In the case of cable sharing, additional requirements shall be taken into account for balanced cabling. The additional crosstalk requirements are specified in 9.3 of ISO/IEC 11801 (2002).

The permanent links shall comply with the requirements of the appropriate Class of ISO/IEC 11801.

Copyright International Organization for Standardization
Provided by IHS under license with ISO
No reproduction or networking permitted without license from IHS Not for Resale

### A.2.2 Additional requirements

#### A.2.2.1 TCL

These requirements replace the requirement for unbalance attenuation, measured as LCL, of 6.4.14 of ISO/IEC 11801.

The TCL parameter is applicable to all Classes.

The TCL of each pair of a channel constructed of unscreened cabling components that is intended to be subjected to an environmental classification $E_X$ shall meet the limits computed, to one decimal place, using the formulae of Table 3. The limits shown in Table 4 are derived from the formulae at key frequencies only.

The TCL of each pair of a channel constructed of screened cabling components that is subjected to an environmental classification $E_X$ is not specified (ffs).

The TCL requirements shall be met at both ends of the cabling and shall be achieved by the appropriate choice of cables and connecting hardware. Installation mitigation may be needed when components from a lower performance category are used in a higher performance system.

The measurement of TCL for installed cabling is under development. TCL of a sample installation may be assessed by laboratory measurements of representative samples of permanent links assembled using the components, connector termination practices and installation practices in question. The laboratory testing of TCL is performed using IEC 61935-1.

#### A.2.2.2 ELTCTL

The ELTCTL parameter is applicable to Classes D, E and F only.

The ELTCTL of each pair of a channel constructed of unscreened cabling components that is intended to be subjected to an environmental classification $E_X$ shall meet the limits computed, to one decimal place, using the formulae of Table 5. The limits shown in Table 6 are derived from the formulae at key frequencies only.

The TCL of each pair of a channel constructed of screened cabling components that is subjected to an environmental classification $E_X$ is not specified (ffs).

The ELTCTL requirements shall be met at both ends of the cabling and shall be achieved by the appropriate choice of cables and connecting hardware. Installation mitigation may be needed when components from a lower performance category are used in a higher performance system.

The measurement of ELTCTL for installed cabling is under development. ELTCTL of a sample installation may be assessed by laboratory measurements of representative samples of permanent links assembled using the components, connector termination practices and installation practices in question. The laboratory testing of ELTCTL is performed using IEC 61935-1.

#### A.2.2.3 Coupling attenuation

The coupling attenuation parameter is applicable to Classes D, E and F only.

The coupling attenuation of each pair of a channel constructed of screened cabling components that is intended to be subjected to an environmental classification $E_X$ shall meet

--`,,```,,,,````-`-`,,`,,`,`,,`---

Copyright International Organization for Standardization
Provided by IHS under license with ISO
No reproduction or networking permitted without license from IHS Not for Resale

the limits computed, to one decimal place, using the formulae of Table 7. The limits shown in Table 8 are derived from the formulae at key frequencies only.

The coupling attenuation of each pair of a channel constructed of unscreened cabling components that is subjected to an environmental classification $E_X$ is not specified (ffs).

The coupling attenuation requirements shall be met at both ends of the cabling and shall be achieved by the appropriate choice of cables and connecting hardware. Installation mitigation may be needed when components from a lower performance category are used in a higher performance system.

The measurement of coupling attenuation for installed cabling is under development. Coupling attenuation of a sample installation may be assessed by laboratory measurements of representative samples of permanent links assembled using the components, connector termination practices and installation practices in question. The laboratory testing of coupling attenuation is performed using the appropriate part of IEC 61156.

### A.2.3 Optical fibre cabling

#### A.2.3.1 All-silica optical fibre permanent links

The permanent link requirements of ISO/IEC 11801 apply.

#### A.2.3.2 Plastic optical fibre permanent links

The attenuation of a permanent link at a specified wavelength shall not exceed the sum of the specified attenuation values for the cabling components at that wavelength (where the attenuation of a length of optical fibre cable is calculated from its attenuation coefficient multiplied by its length).

The test methods are for further study.

#### A.2.3.3 Plastic clad silica optical fibre permanent links

The attenuation of a permanent link at a specified wavelength shall not exceed the sum of the specified attenuation values for the cabling components at that wavelength (where the attenuation of a length of optical fibre cable is calculated from its attenuation coefficient multiplied by its length).

The test methods are for further study.

Copyright International Organization for Standardization
Provided by IHS under license with ISO
No reproduction or networking permitted without license from IHS Not for Resale

# Annex B
(normative)

# Test methods

## B.1 General

### B.1.1 Visual inspection

#### B.1.1.1 General

The objective of the visual inspection is to verify that the installation and the test results are in accordance with the requirements.

The documentation shall be a basis for the operation and maintenance of the installation.

#### B.1.1.2 Conformance of the components

The components shall comply with

- their Category of qualification according to the IEC specifications,
- the environmental specification.

The visual inspection shall verify that the installation and specifically the connection between connectors and cables shall comply with the manufacturer's specification.

#### B.1.1.3 Conformance of the labeling

The visual inspection shall verify that labeling is in agreement with this International Standard, the installation specification and local regulations, if applicable.

The visual inspection shall verify the labeling at each TO and that the test reports use the same or aggregate references.

#### B.1.1.4 Conformance of the documentation

The documentation of the tests shall be in accordance of the description above for each parameter for balanced and optical fibre cabling. Furthermore the documentation shall meet the specific requirements of the client (e.g. characterisation traces for the balanced cabling).

NOTE The installer shall provide the software or at least the revision number to read the results of the test results database.

### B.1.2 Measurements

#### B.1.2.1 Location of measurement (test) interfaces

#### B.1.2.1.1 Cabling under test

The cabling under test shall be either a channel or a permanent link. Termination resistors shall be removed from all termination points connected to the cabling under test unless required by the test method.

#### B.1.2.1.2 Reference planes for balanced and optical fibre cabling

The accuracy of the test system is defined at its reference plane. The reference planes for channels and links are defined according to Figure B.1.

--`,,```,,,,````-`-`,,`,,`,`,,`---

Copyright International Organization for Standardization
Provided by IHS under license with ISO
No reproduction or networking permitted without license from IHS Not for Resale

The test configuration reference plane at each end of a channel is within the equipment cable next to, but excluding, the connection of the equipment cable into the test equipment.

The test configuration reference plane of a link is within the test cord cable next to, and including, the test cord connection which mates to the termination point of the link under test.

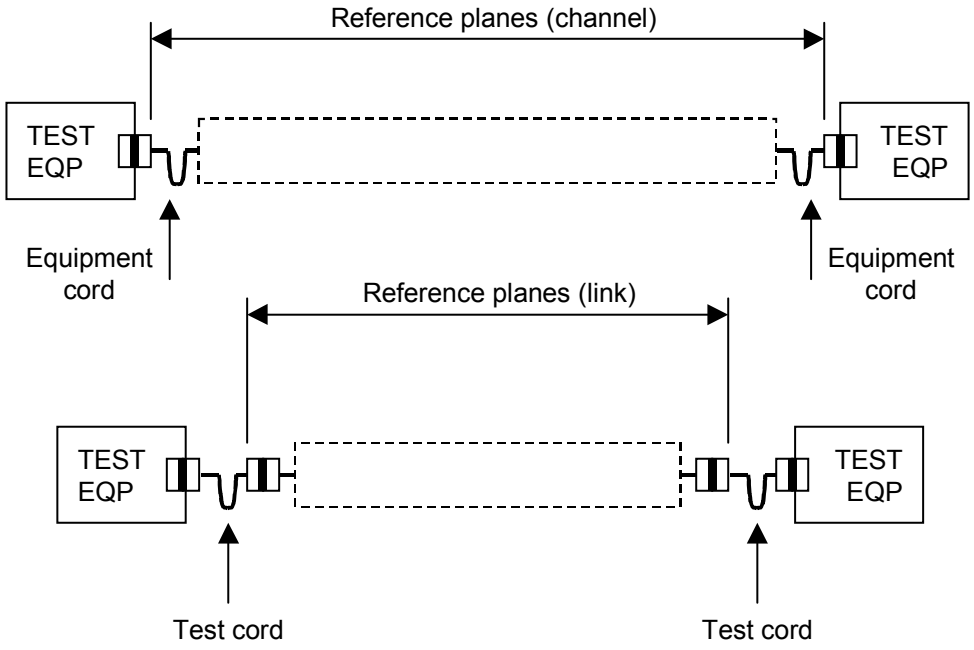


**Figure B.1 – Reference planes for link and channels (point-to-point)**

### B.1.2.2 Safety requirements for test procedures

#### B.1.2.2.1 Safety

Relevant national and local regulations covering safe working practices shall be observed.

#### B.1.2.2.2 Equipment protection

Transmission and terminal equipment shall be removed from the termination points connected to the cabling under test.

### B.1.2.3 Test system

#### B.1.2.3.1 Introduction

This International Standard specifies test procedures for the measurement of cabling transmission performance on installed cabling comprising balanced or optical fibre cabling. The test methods refer to existing standards-based procedures where they exist.

The test system shall be specified for each test. The test system comprises local test equipment and remote test equipment (where required) together with any cabling interface adaptors which enable the connection of the test equipment to the cabling under test (see Figure B.2). The test equipment and cabling interface adaptors shall be used in accordance with IEC 61935-1.

--`,,```,,,,````-`-`,,`,,`,`,,`---

Copyright International Organization for Standardization
Provided by IHS under license with ISO
No reproduction or networking permitted without license from IHS Not for Resale

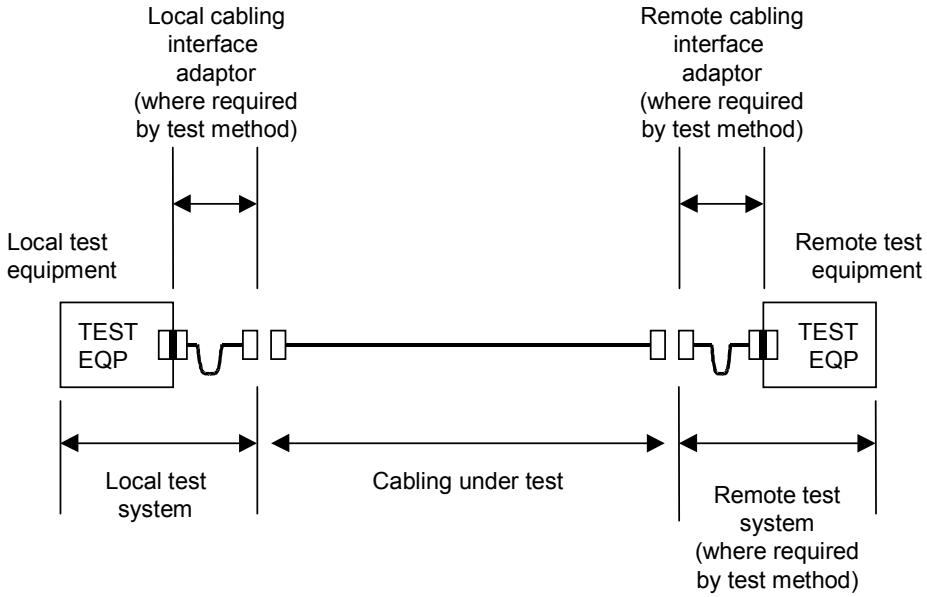


**Figure B.2 – The test system and the cabling under test**

The uncertainty of measurement for a given parameter is the accuracy of the test system. The test system is defined as the test equipment together with the cabling interface adaptors.

The test equipment and cabling interface adaptors shall be in accordance with B.1.2.3.2 and B.1.2.3.3 respectively.

#### B.1.2.3.2 Test equipment

The appropriate type of test equipment and any specific requirements for that equipment shall be referenced by the test procedure.

#### B.1.2.3.3 Cabling interface adaptors

The cabling interface adaptors may take the form of test cords, terminations, impedance matching devices or more complex combinations of components.

For balanced cabling, cabling interface adaptors define the number of pairs and the configuration of those pairs under test in accordance with the relevant cabling or application standard.

For optical fibre cabling, cabling interface adaptors define the number of optical fibres under test in accordance with the relevant cabling or application standard.

Cabling interface adaptors have an effect on the uncertainty of measurement.

The test system designer shall define a maximum operational lifetime for the cabling interface adaptor (e.g. a time period or a maximum number of connector mating cycles to the test equipment and/or cabling under test) or provide a method to determine an acceptable adaptor performance.

For optical fibre cabling, adaptors shall not use gels when testing channels or links.

--`,,```,,,,````-`-`,,`,,`,`,,`---

Copyright International Organization for Standardization
Provided by IHS under license with ISO
No reproduction or networking permitted without license from IHS
Not for Resale

#### B.1.2.4 Normalisation and calibration

The test system designer shall define a process for the normalisation of the test system in order that the stated measurement accuracy is achieved. The test operator shall ensure that the test system has been normalised in accordance with this process prior to the test being carried out.

The normalisation process shall include a traceable calibration procedure for the test equipment. The test operator shall have evidence, in the form of a valid calibration certificate, to support the use of the test equipment at the time the tests are carried out.

#### B.1.2.5 Environmental conditions

##### B.1.2.5.1 Contamination

The presence of dust, dirt and other contaminants at the interfaces to the cabling under test may produce misleading results and in some cases damage the cabling under test and/or the cabling interface adaptor.

The mating connector end faces of cabling interface adaptors and the cabling under test shall be cleaned in accordance with the connecting hardware manufacturer's instructions prior to mating.

##### B.1.2.5.2 Test equipment

External effects (for example, environmental, electromagnetic or physical) can affect the test equipment thereby influencing the measured results. The effects shall either be quantified or eliminated.

The minimum level of accuracy of the test equipment for measuring a Class (channel or permanent link) shall be in accordance with the Table B.1.

**Table B.1 – Level of accuracy for balanced cabling tester**

| Class | D | E | F |
|---|---|---|---|
| Level IEC 61935-1 | II | III | IV |

##### B.1.2.5.3 Cabling under test

Measurement of attenuation (insertion loss), d.c. loop resistance and related parameters applied to cabling that will be subjected to high temperatures during operation may produce misleading results if the tests are conducted at lower temperatures.

The temperature of the testing time shall be noted.

Transmission testing shall be performed in a passive environment.

Measurements shall either

- be made under environmental conditions which are representative of the intended operational environment, or
- have correction factors applied to the measured results in accordance with manufacturers' specifications in order to reflect the intended operating environment, or
- be clearly documented as being carried out in unrepresentative conditions.

--`,,```,,,,````-`-`,,`,,`,`,,`---

Copyright International Organization for Standardization
Provided by IHS under license with ISO
No reproduction or networking permitted without license from IHS Not for Resale

#### B.1.2.6 Test results

##### B.1.2.6.1 Generic cabling

Test limits and required results are defined in ISO/IEC 11801.

##### B.1.2.6.2 Application-specific cabling

The application standard or equipment documentation of the manufacturer shall be consulted to determine the appropriate test limits. The required results shall be consistent with the length and configuration of the installed cabling.

##### B.1.2.6.3 Treatment of marginal test results

Marginal results may be treated in a number of ways including

- verification of the normalisation of the test system,
- acceptance of all marginal results,
- rejection of all marginal results,
- acceptance of marginal pass results and rejection of marginal fail results,
- repetition of the measurement using a test system with improved measurement accuracy.

It is recommended that the approach to be adopted is agreed upon before the testing is carried out.

#### B.1.2.7 Documentation

The documentation for each parameter shall include:

a) details of the parameter,
b) details of the test system,
c) test equipment,
    1) type and manufacturer,
    2) serial number and calibration status,
    3) level and software version.
d) details of the cabling interface adaptors (type, reference numbers, manufacturer and relevant performance),
e) the stated uncertainty of measurement (measurement accuracy),
f) details of the cabling under test,
g) reference numbers,
h) the date of the test (the time of the test may also be recorded),
i) relevant environmental conditions,
j) note the ambient temperature
k) the presence and location of termination resistors (where required by the test method),
l) the test operator,
m) the measured result,
n) the required result.

NOTE 1 NEXT: If the 4 dB rule is used, it should be clearly indicated.

NOTE 2 RL: If the 3 dB rule is used, it should be clearly indicated.

Copyright International Organization for Standardization
Provided by IHS under license with ISO
No reproduction or networking permitted without license from IHS Not for Resale

## B.2 Test parameters for balanced cabling

### B.2.1 General

Cabling characteristics to be tested for acceptance, compliance and reference shall meet or exceed the requirements as given in Table B.2 for balanced cabling.

**Table B.2 – Cabling characteristics of balanced cabling for acceptance, compliance, and reference testing**

| Characteristics of balanced cabling | Testing for | | |
|---|---|---|---|
| | Acceptance | Compliance | Reference |
| Return loss | I | N | N |
| Insertion loss | I | N | N |
| NEXT | I | N | N |
| PS NEXT | C | C | C |
| ACR | I | N | N |
| PS ACR | I | C | C |
| ELFEXT | I | N | N |
| PS ELFEXT | C | C | C |
| DC loop resistance | I | N | N |
| Propagation delay | I | N | N |
| Skew | I | N | N |
| TCL | | | N |
| ELTCTL | | | N |
| Coupling attenuation[a] | | | N |
| Length[b] | I | I | N |
| Wire-map | N | N | N |
| Continuity of conductors, screens (if applicable), short and open circuits | N | N | N |
| KEY<br>I = Information<br>N = Normative<br>C = Computed | | | |
| [a] According to Table 2.<br>[b] Length is not a pass/fail criterion. | | | |

### B.2.2 Wire map

Test method, see 5.3.2.2 of IEC 61935-1.

### B.2.3 Length

Test method, see 5.3.4 of IEC 61935-1.

### B.2.4 Propagation delay

Test method, see 5.3.3 of IEC 61935-1.

Copyright International Organization for Standardization
Provided by IHS under license with ISO
No reproduction or networking permitted without license from IHS Not for Resale

### B.2.5 Delay skew

Test method, see 5.3.3 of IEC 61935-1.

### B.2.6 Attenuation (insertion loss)

#### B.2.6.1 Parameter

The term attenuation, widely used throughout the cabling industry, refers to a parameter more correctly described and measured as “insertion loss”. In this International Standard the two terms are used in parallel with the understanding that the parameter measured is “insertion loss”.

#### B.2.6.2 Test method

See 5.3.5 of IEC 61935-1 for the measurement of attenuation (insertion loss) on installed cabling at frequencies up to the maximum frequency specified for the cabling Class using portable field test equipment.

### B.2.7 Near end crosstalk loss (NEXT, pair-to-pair and power sum)

See 5.3.6 of IEC 61935-1 for the measurement of NEXT (pair-to-pair and power sum) on installed cabling at frequencies up to the maximum frequency specified for the cabling Class using portable field test equipment.

The cable within the cabling interface adaptor shall be as short as possible.

### B.2.8 Equal level far end crosstalk loss (ELFEXT, pair-to-pair and power sum)

See 5.3.7 of IEC 61935-1 for the measurement of ELFEXT (pair-to-pair and power sum) at frequencies up to the maximum frequency specified for the cabling Class using portable field test equipment.

The cable within the cabling interface adaptors shall be as short as possible.

### B.2.9 Attenuation to crosstalk ratio (ACR, pair-to-pair and power sum)

#### B.2.9.1 ACR (pair-to-pair)

ACR (pair-to-pair) is the difference between the NEXT and the attenuation (insertion loss) of the cabling in decibel.

#### B.2.9.2 Power sum ACR

Power sum ACR of pair is computed from power sum NEXT and attenuation (insertion loss).

### B.2.10 Return loss

See 5.3.8 of IEC 61935-1 for the measurement of return loss on installed cabling at frequencies up to the maximum frequency specified for the cabling Class using portable field test equipment.

The cable within the cabling interface adaptor shall be as short as possible.

### B.2.11 Coupling attenuation

These measurements are not mandatory but could be made in harsh environment. Measurement methods for sample links in a laboratory environment are contained in the appropriate parts of IEC 61156.

Copyright International Organization for Standardization
Provided by IHS under license with ISO
No reproduction or networking permitted without license from IHS Not for Resale

### B.2.12 Direct current (d.c.) loop resistance

See 5.3.9 of IEC 61935-1 for the measurement of d.c. loop resistance on installed cabling.

## B.3 Test parameters for optical fibre cabling

### B.3.1 General

Cabling characteristics to be tested for acceptance, compliance and reference shall meet or exceed the requirements as given in Table B.3 for fibre cabling.

**Table B.3 – Cabling characteristics of optical fibre cabling for acceptance, compliance, and reference testing**

| Characteristics of optical fibre cabling | Testing for | | |
|---|---|---|---|
| | Acceptance | Compliance | Reference |
| Optical attenuation | N | N | N |
| Multimode modal bandwidth | | | N |
| Propagation delay | I | N | N |
| Length | C | C | C |
| Continuity and maintenance of polarity | N | N | N |
| KEY<br>I = Information<br>N = Normative<br>C = Computed | | | |

### B.3.2 All-silica optical fibre

Test methods shall be conducted according to ISO/IEC 14763-3.

### B.3.3 Plastic optical fibre

For further study.

### B.3.4 Plastic clad silica optical fibre

For further study.

Copyright International Organization for Standardization
Provided by IHS under license with ISO
No reproduction or networking permitted without license from IHS Not for Resale

# Annex C
(normative)

# Reference implementations (not conforming to clause 5)

## C.1 Introduction

This annex describes reference implementations, using the components referenced in clauses 8, 9 and 10, which deliver transmission performance in accordance with the Classes of clause 6 for cabling structures that are not supported by clause 5.

These reference implementations are in addition to those supported in a normative manner by this International Standard.

## C.2 Connection-less channels

### C.2.1 General

Some implementers believe patch panel and TO's connections to be potential points of failure and prefer to minimize or avoid such connections as much as possible. C.2.2 discusses channels with no intermediate connections. C.2.3 discusses cross-connections only.

### C.2.2 Channels with no connections

Figure C.1 shows

- an intermediate cabling channel and a floor distribution channel created without intermediate connections,
- a floor distribution channel created without intermediate connections,
- a combined intermediate and floor distribution channel created without intermediate connections.

For balanced cabling the length of the cable C shall be determined by using $N$ = 0 and $F$ = 0 within the equations shown in Table C.1.

In order to verify transmission performance, test systems shall take into account the specific assignment of cable elements at the ends of the cable as required by the application-specific equipment.

Copyright International Organization for Standardization
Provided by IHS under license with ISO
No reproduction or networking permitted without license from IHS Not for Resale

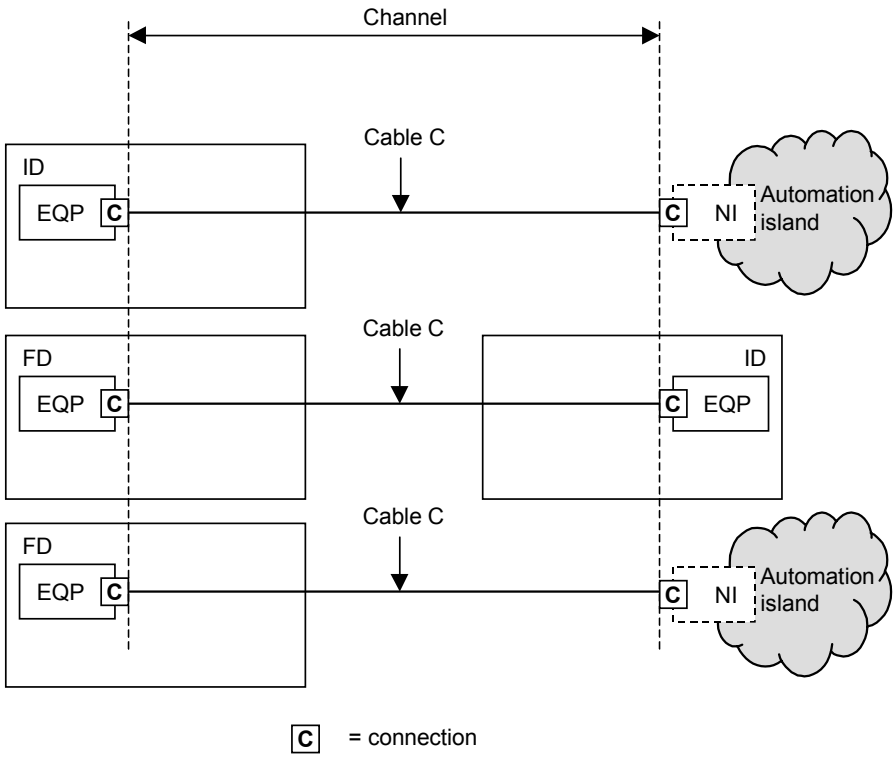


**Figure C.1 – Balanced cabling channel configurations with no connections**

### C.2.3 Channels with inter-connections

Figure C.2 shows the channels of Figure C.1 with the addition of an inter-connect panel and an equipment cord at the distributor(s).

For balanced cabling the length of the cable C shall be determined by the equations shown in Table C.1.

In Table C.1 it is assumed that

- the flexible cable within the equipment cord(s) has a higher insertion loss specification than the one used in the fixed cable (see clause 8),
- the cables within these cords in the channel have a common insertion loss specification.

The maximum length of the fixed cable will depend on the total length of cords to be supported within a channel. During the operation of the installed cabling, a management system should be implemented to ensure that the cords used to create the channel conform to the design rules for the floor, building or installation.

In order to verify transmission performance, test systems shall take into account the specific assignment of cable elements at the ends of the cables as required by the application-specific equipment.

--`,,```,,,,````-`-`,,`,,`,`,,`---

Copyright International Organization for Standardization
Provided by IHS under license with ISO
No reproduction or networking permitted without license from IHS Not for Resale

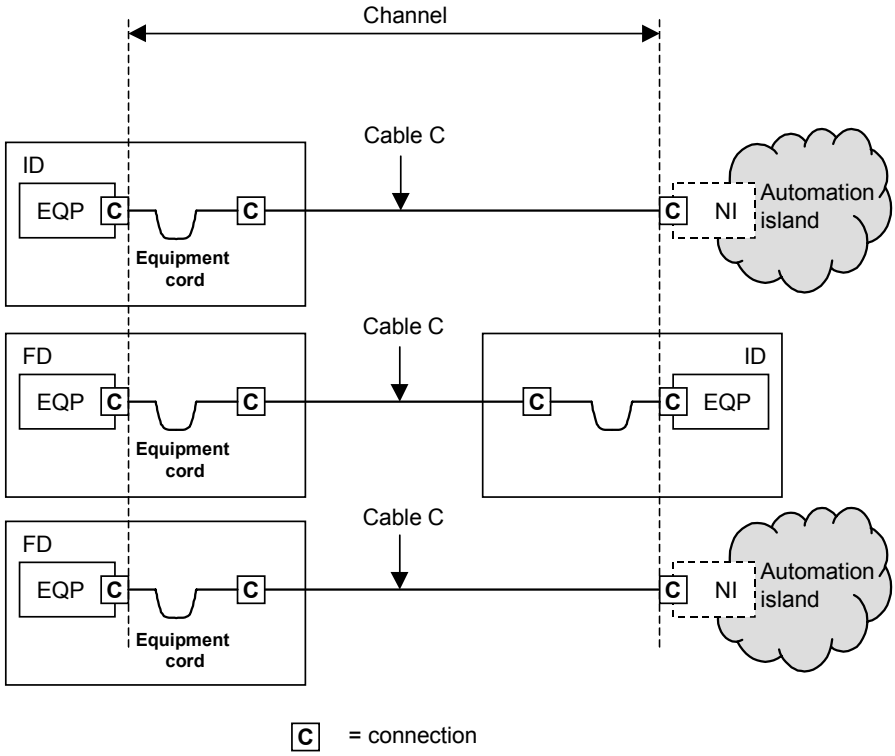


**Figure C.2 – Balanced cabling channel configurations of Figure C.1 with interconnection at distributor**

**Table C.1 – Channel equations for balanced cabling**

| Com-ponent | Cable length $C$ (m) [a] | | | | | |
|---|---|---|---|---|---|---|
| **Category** | **Class A** | **Class B** | **Class C** | **Class D** | **Class E** | **Class F** |
| 5 | $C$ = 2 000 | $C$ = (258-2$N$-$F$•$Y$)/$X$ | $C$ = (178-2$N$-$F$•$Y$)/$X$ | $C$ = (113-2$N$-$F$•$Y$)/$X$ | – | – |
| 6 | $C$ = 2 000 | $C$ = (268-$N$-$F$•$Y$)/$X$ | $C$ = (193-$N$-$F$•$Y$)/$X$ | $C$ = (115-$N$-$F$•$Y$)/$X$ | $C$ = (106-$N$-$F$•$Y$)/$X$ | |
| 7 | $C$ = 2 000 | $C$ = (268-$N$-$F$•$Y$)/$X$ | $C$ = (198-$N$-$F$•$Y$)/$X$ | $C$ = (119-$N$-$F$•$Y$)/$X$ | $C$ = (109-$N$-$F$•$Y$)/$X$ | $C$ = (106-$N$-$F$•$Y$)/$X$ |
| KEY<br>$N$ = number of connections in the channel<br>$F$ = combined length of the equipment cords (m)<br>$X$ = ratio of the insertion loss of the cable C (dB/m) to fixed cable attenuation (dB/m), see clause 8.<br>$Y$ = ratio of the equipment cord cable insertion loss (dB/m) to fixed cable attenuation (dB/m), see clause 8. | | | | | | |
| [a] Applications limited by propagation delay or skew may not be supported if channel lengths exceed 100 m. | | | | | | |
| For operating temperatures above 20 °C, B should be reduced by 0,2 % per °C for screened cables and 0,4 % per °C (20 °C to 40 °C) and 0,6 % per °C (> 40 °C to 60 °C) for unscreened cables. Where the operating temperature exceeds 60 °C then manufacturers' information shall be consulted regarding required reductions in cable length. | | | | | | |

## C.3 Channels using balanced cabling bulkhead connections

Figure C.3 shows an intermediate cabling channel and a floor distribution channel created using a fixed cable terminated at a closure bulkhead.

The length of the fixed cable used within a channel shall be determined by the equations shown in Table C.2.

--`,,```,,,,````-`-`,,`,,`,`,,`---

Copyright International Organization for Standardization
Provided by IHS under license with ISO
No reproduction or networking permitted without license from IHS Not for Resale

In Table C.2 it is assumed that

- the flexible cable within these cords has a higher insertion loss specification than that used in the fixed cable (see clause 8),
- the cables within these cords in the channel have a common insertion loss specification.

The maximum length of the fixed cable will depend on the total length of cords to be supported within a channel. During the operation of the installed cabling, a management system should be implemented to ensure that the cords used to create the channel conform to the design rules for the floor, building or installation.

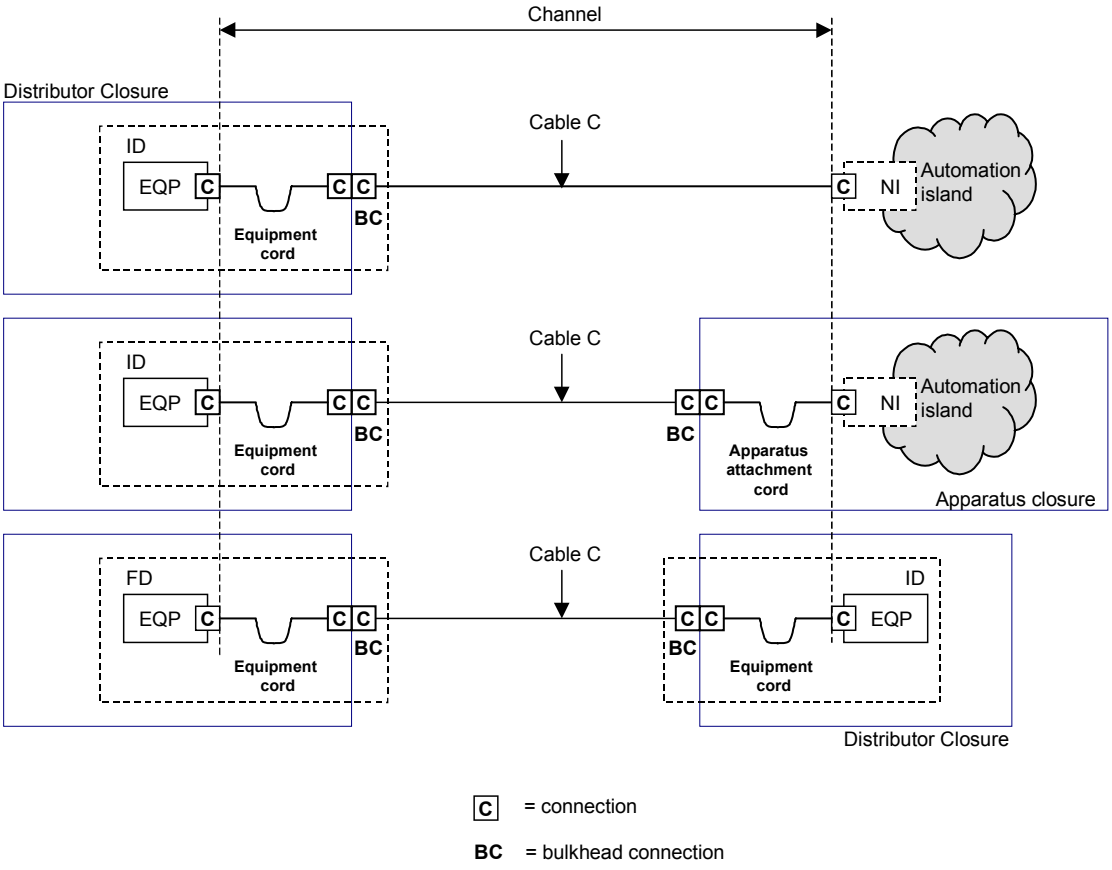


**Figure C.3 – Balanced cabling channel configurations with bulkhead connections**

Copyright International Organization for Standardization
Provided by IHS under license with ISO
No reproduction or networking permitted without license from IHS
Not for Resale

**Table C.2 – Channel equations for bulkhead connections**

| **Component** | **Cable length $C$ (m) [a]** | | |
|---|---|---|---|
| **Category** | **Class A** | **Class B** | **Class C** |
| 5 | $C$ = 2 000 | $C$ = (258-5$M$-2$N$-$F$•$Y$)/$X$ | $C$ = (178-5$M$-2$N$-$F$•$Y$)/$X$ |
| 6 | $C$ = 2 000 | $C$ = (268-5$M$-$N$-$F$•$Y$)/$X$ | $C$ = (193-5$M$-$N$-$F$•$Y$)/$X$ |
| 7 | $C$ = 2 000 | $C$ = (268-5$M$-$N$-$F$•$Y$)/$X$ | $C$ = (198-5$M$-$N$-$F$•$Y$)/$X$ |
| **Category** | **Class D** | **Class E** | **Class F** |
| 5 | – | – | – |
| 6 | $C$ = (115-5$M$-$N$-$F$•$Y$)/$X$ | – | – |
| 7 | $C$ = (119-5$M$-$N$-$F$•$Y$)/$X$ | $C$ = (109-5$M$-$N$-$F$•$Y$)/$X$ | – |

KEY

$M$ = number of bulkhead connections in the channel

$N$ = number of connections in the channel

$F$ = combined length of the equipment cords (m)

$X$ = ratio of the insertion loss of the cable C (dB/m) to fixed cable attenuation (dB/m) – see clause 8.

$Y$ = ratio of the equipment cord cable insertion loss (dB/m) to fixed cable attenuation (dB/m) – see clause 8.

[a] Applications limited by propagation delay or skew may not be supported if channel lengths exceed 100 m.

For operating temperatures above 20 °C, cable length $C$ should be reduced by 0,2 % per degree celsius for screened cables and 0,4 % per degree celsius (20 °C to 40 °C) and 0,6 % per degree celsius (>40 °C to 60 °C) for unscreened cables. If the operating temperature exceeds 60 °C the manufacturer's information shall be consulted regarding required reductions in cable length.

The bulkhead connection is considered to comprise a "back-to-back" connection as described in 10.2.4.3 of ISO/IEC 11801:2002 as follows:

For connecting devices that provide cross-connections without patch cords or jumpers, electrical performance shall not be worse than the equivalent of two connectors and 5 m of patch cord of the same category. Applicable parameters include insertion loss, input to output resistance, input to output resistance unbalance, propagation delay, delay skew, and transfer impedance. In addition, crosstalk, return loss and unbalance attenuation (near end, TCL) of such devices shall not exceed 6 dB worse than the minimum values specified in the following tables.

However, the physical implementation of bulkhead connections typically feature a very short cable length and the connection transmission performance may fall below that defined above.

It should be noted that the following reference implementations cannot be supported if bulkhead connections are used:

- Class D channels using Category 5 components;
- Class E channels using Category 6 components;
- Class F channels using Category 7 components.

If any of the above implementations are desired then a single connection at a bulkhead is recommended.

--`,,```,,,,````-`-`,,`,,`,`,,`---

Copyright International Organization for Standardization
Provided by IHS under license with ISO
No reproduction or networking permitted without license from IHS Not for Resale

# Annex D
(informative)

# Reference implementations

## D.1 Introduction

This annex describes reference implementations, using the components from clauses 8, 9 and 10, that are capable of delivering transmission performance in accordance with the classes of clause 6 for cabling structures that are not supported by clause 5. These reference implementations are not able to be supported in a normative manner by this International Standard.

## D.2 Channels using balanced cabling bulkhead connections with additional connections

Figure D.1 shows intermediate and floor distribution channels created using a fixed cable terminated at one or more closure bulkheads with additional connections associated with those bulkhead connections.

The length of the fixed cable used within a channel shall be determined by the equations shown in Table D.1.

In Table D.1 it is assumed that

a) the flexible cable within these cords has a higher insertion loss specification than that used in the fixed cable (see clause 8),

b) the cables within these cords in the channel have a common insertion loss specification.

The maximum length of the fixed cable will depend on the total length of cords to be supported within a channel. During the operation of the installed cabling, a management system should be implemented to ensure that the cords used to create the channel conform with the design rules for the floor, building or installation.

Copyright International Organization for Standardization
Provided by IHS under license with ISO
No reproduction or networking permitted without license from IHS Not for Resale

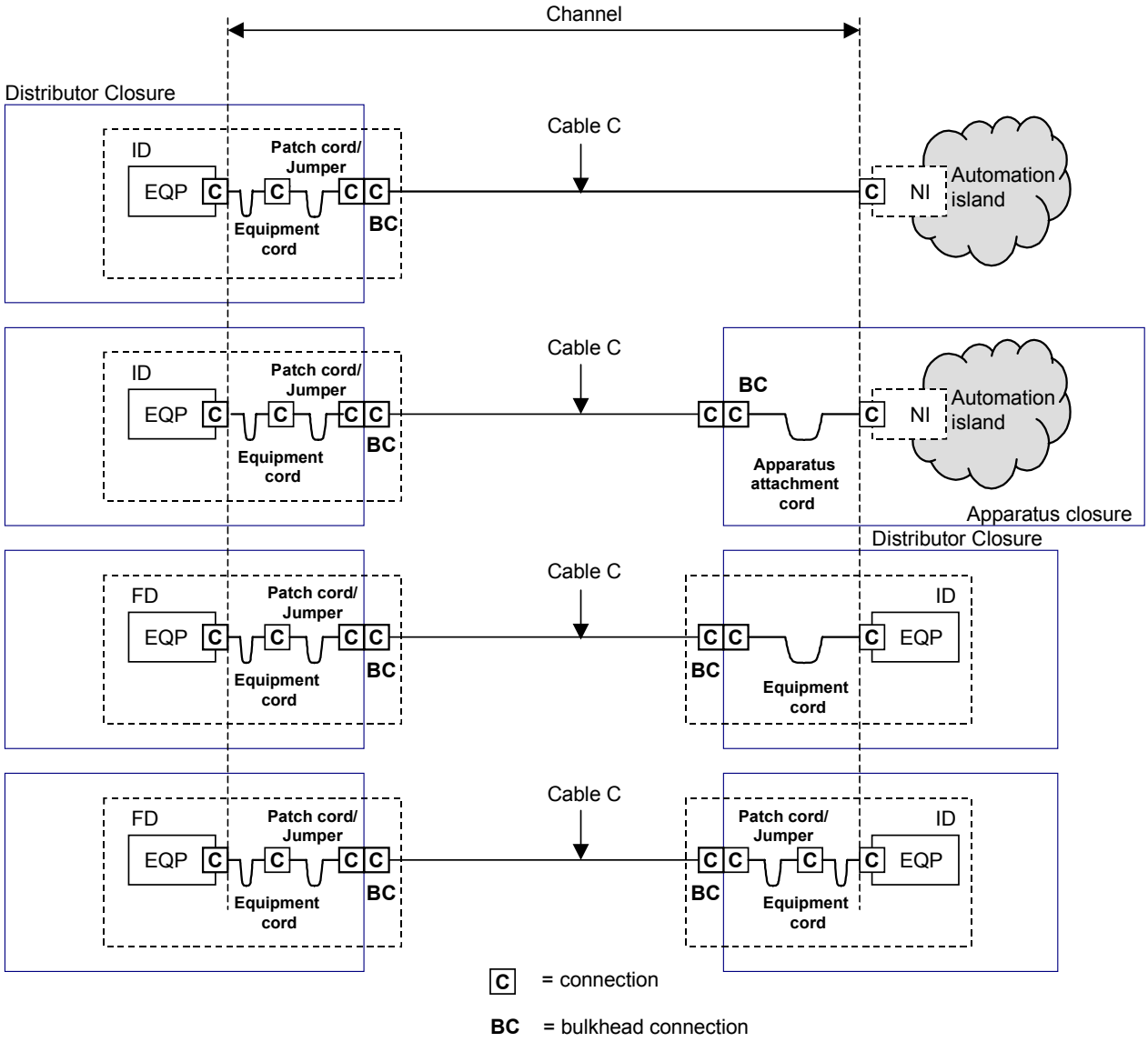


**Figure D.1 – Channel configurations**

Copyright International Organization for Standardization
Provided by IHS under license with ISO
No reproduction or networking permitted without license from IHS
Not for Resale

**Table D.1 – Channel equations**

| **Component** | **Cable length $C$ [a]** m | | |
|---|---|---|---|
| **Category** | **Class A** | **Class B** | **Class C** |
| 5 | $C$ = 2 000 | $C$ = (258-5$M$-$N$- $F$•$Y$)/$X$ | $C$ = (178-5$M$-$N$- $F$•$Y$)/$X$ |
| 6 | $C$ = 2 000 | $C$ = (268-5$M$-$N$- $F$•$Y$)/$X$ | $C$ = (193-5$M$-$N$- $F$•$Y$ )/$X$ |
| 7 | $C$ = 2 000 | $C$ = (268-5$M$-$N$- $F$•$Y$)/$X$ | $C$ = (198-5$M$-$N$- $F$•$Y$ )/$X$ |
| **Category** | **Class D** | **Class E** | **Class F** |
| 5 | – | – | – |
| 6 | $C$ = (115-5$M$-$N$- $F$•$Y$ )/$X$ | – | – |
| 7 | $C$ = (119-5$M$-$N$- $F$•$Y$ )/$X$ | $C$ = (109-5$M$-$N$- $F$•$Y$ )/$X$ | – |
| $M$ = number of bulkhead connections in the channel<br>$N$ = number of connections in the channel<br>$F$ = combined length of the equipment cords (m)<br>$X$ = ratio of the insertion loss of the cable C (dB/m) to fixed cable attenuation (dB/m) - see clause 8<br>$Y$ = ratio of the equipment cord cable insertion loss (dB/m) to fixed cable attenuation (dB/m) - see cause 8 | | | |
| [a] Applications limited by propagation delay or skew may not be supported if channel lengths exceed 100 m. | | | |
| For operating temperatures above 20 °C, $C$ should be reduced by 0,2 % per °C for screened cables and 0,4 % per °C (20 °C to 40 °C) and 0,6 % per °C (> 40 °C to 60 °C) for unscreened cables. Where the operating temperature exceeds 60 °C then manufacturers' information shall be consulted regarding required reductions in cable length. | | | |

The bulkhead connection is considered to comprise a "back-to-back" connection as described in 10.2.4.3 of ISO/IEC 11801:2002 as follows:

For connecting devices that provide cross-connections without patch cords or jumpers, electrical performance shall not be worse than the equivalent of two connectors and 5 m of patch cord of the same Category. Applicable parameters include insertion loss, input to output resistance, input to output resistance unbalance, propagation delay, delay skew, and transfer impedance. In addition, crosstalk, return loss and unbalance attenuation (near end, TCL) of such devices shall not exceed 6 dB worse than the minimum values specified in the following tables.

However, the physical implementation of bulkhead connections typically feature a very short cable length and the connection transmission performance may fall below that defined above.

It should be noted that the following reference implementations cannot be supported if bulkhead connections are used:

- Class D channels using Category 5 components;
- Class E channels using Category 6 components;
- Class F channels using Category 7 components.

If any of the above implementations are desired then a single connection at a bulkhead is recommended.

Copyright International Organization for Standardization
Provided by IHS under license with ISO
No reproduction or networking permitted without license from IHS Not for Resale

# Annex E
(informative)

# Supported applications

## E.1 Supported applications for balanced cabling

Balanced cabling specified in this International Standard is intended to support the applications detailed in ISO/IEC 11801; other applications not listed in ISO/IEC 11801 may also be supported.

## E.2 Supported applications for optical fibre cabling

Optical fibre cabling specified in this International Standard is intended to support the applications detailed in ISO/IEC 11801 together with those of this annex; other applications not listed may also be supported.

Optical fibre cabling applications are correlated to channel performance Classes specified in clause 6.

Table E.1, Table E.2, Table E.3 contain established and emerging applications defined by the relevant application committees.

Table E.1 contains detailed information of the greatest channel lengths supported by process monitoring and control applications for each recognised all-silica multimode optical fibre.

Table E.2 contains detailed information of the greatest channel lengths supported by process monitoring and control applications for each recognised singlemode optical fibre.

Table E.3 contains detailed information of the greatest channel lengths supported by process monitoring and control applications for each recognised plastic optical fibre.

**Table E.1 – Supported applications and maximum channel lengths with all-silica multimode optical fibres**

| | $\lambda$ nm | **Core diameter** μm | **OM1** | | | **OM2** | | | **OM3** | | |
|---|---|---|---|---|---|---|---|---|---|---|---|
| Network Application | | | **CIL**[a] dB | **L**[b] m | **Class** | **CIL**[a] dB | **L**[b] m | **Class** | **CIL**[a] dB | **L**[b] m | **Class** |
| ControlNET | 1300 | 50 | 6,5 | 1 514 | OF-500 | 6,5 | 1 514 | OF-500 | 6,5 | 1 514 | OF-500 |
| | | 62,5 | 11,3 | 6 533 | OF-2000 | 11,3 | 6 533 | OF-2000 | | | |

[a] CIL is the maximum channel insertion loss (or optical power budget, as applicable) as defined in the application standard.

[b] L is the lower of either the maximum channel length specified in the application standard or a calculated length from the CIL with 1,5 dB allocated to connecting hardware.

Copyright International Organization for Standardization
Provided by IHS under license with ISO
No reproduction or networking permitted without license from IHS Not for Resale

**Table E.2 – Supported applications and maximum channel lengths with all-silica singlemode optical fibres**

| | $\lambda$ nm | OS1 | | | OS2 | | |
|---|---|---|---|---|---|---|---|
| Network application | | CIL[a] dB | L[b] m | Class | CIL[a] dB | L[b] m | Class |
| ControlNET | 1 310 | 10,0 | 8 000 | OF-5000 | 10,0 | 20 000 | OF-10000 |

[a] CIL is the maximum channel insertion loss (or optical power budget, as applicable) as defined in the application standard.

[b] L is the lower of either the maximum channel length specified in the application standard or a calculated length from the CIL with 2,0 dB allocated to connecting hardware.

**Table E.3 – Supported applications and maximum channel lengths with plastic optical fibres**

| | $\lambda$ nm | Core dia μm | OP1 | | | OP2 | | | OH1 | | |
|---|---|---|---|---|---|---|---|---|---|---|---|
| Network application | | | CIL[a] dB | L[b] m | Class | CIL[a] dB | L[b] m | Class | CIL[a] dB | L[b] m | Class |
| Profibus v2.0 July 1999 | 650 | - | 9,0 | 25 | OF-25 | 9,0 | 25 | OF-25 | - | - | - |
| Profibus (enhanced) v2.0 July 1999 | 650 | - | 14,0 | 50 | OF-50 | 14,0 | 50 | OF-50 | - | - | - |
| Interbus-S August 2000 | 650 | - | 17,2 | 50 | OF-50 | 17,2 | 50 | OF-50 | - | - | - |

[a] CIL is the maximum channel insertion loss (or optical power budget, as applicable) as defined in the application standard.

[b] L is the lower of either the maximum channel length specified in the application standard or a calculated length from the CIL with 3,0 dB allocated to connecting hardware.

Copyright International Organization for Standardization
Provided by IHS under license with ISO
No reproduction or networking permitted without license from IHS Not for Resale

# Annex F
(informative)

# Introduction to environmental classification in clause 6 [1]

## F.1 General

This annex provides information on the development and application of the environmental classification system introduced in clause 6.

## F.2 Application of environmental classification

### F.2.1 MICE

The term MICE relates to the classification of the environment local to the cabling channel. There are four primary environmental criteria used to classify an environment:

- the M element, defining the mechanical characteristics of the environment;
- the I element, defining the ingress protection characteristics of the environment;
- the C element, defining the climatic characteristics of the environment;
- the E element, defining the electromagnetic characteristics of the environment.

Each of the four primary environmental criteria are further divided into specific parameters and levels for those parameters. The MICE classification for a given location is therefore defined as $M_aI_bC_cE_d$ where a, b, c and d are the individual sub-classifications for the M, I, C and E criteria respectively.

The suffices for the four primary environmental criteria are either 1, 2 or 3. For example, the most benign environment is described as $M_1I_1C_1E_1$ whereas the most harsh environment within the scope of this International Standard would be defined as $M_3I_3C_3E_3$.

### F.2.2 Channel environment

The applicable MICE classification may vary along the length of the cabling channel. As shown in Figure F.1, the ingress protection characteristics of the environment in the automation area and at the automation island are different to, and more severe than, those characteristics on the factory floor or in the telecommunications room.

---

[1] This Annex is the subject of a new work proposal for a Technical Report (TR). It will be replaced as soon as this TR is published.

In addition:

• reference to this Technical Report will be added in the bibliography,

• the reference in 6.2.2 to Annex F will be changed to this Technical Report.

Copyright International Organization for Standardization
Provided by IHS under license with ISO
No reproduction or networking permitted without license from IHS Not for Resale

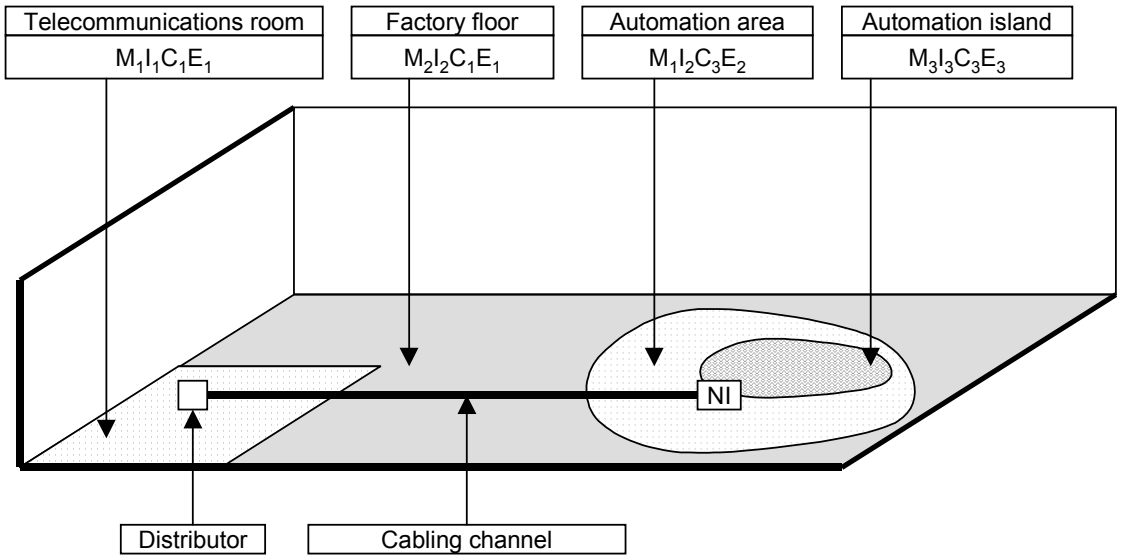


**Figure F.1 – Example of variation of the environment along a cabling channel**

The environment to be classified is that local to the cabling. Where no environmental protection is provided to the cabling, the classification of the local environment is also that of the overall environment at that location.

However, where technical or economic restrictions preclude the use of components compatible with the overall environment, mitigation or isolation techniques may be applied to modify the environment local to the channel in order to allow appropriate components to be installed.

The mitigation or isolation techniques typically involve the use of alternative pathways and/or pathway systems as shown in Figure F.2.

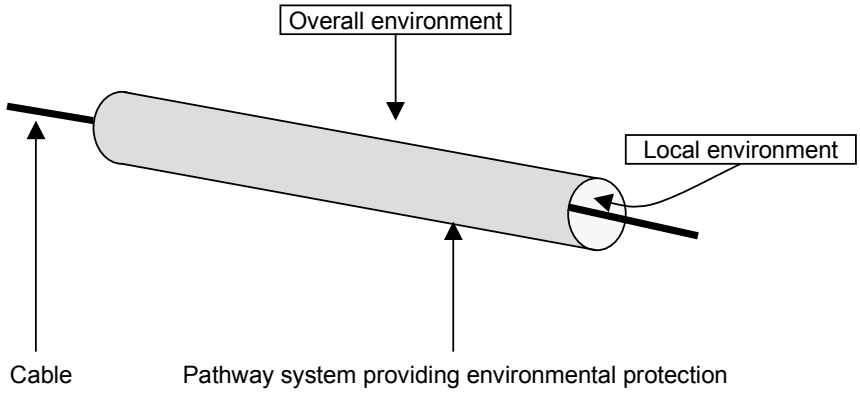


**Figure F.2 – The local environment**

### F.2.3 Component selection

The components used within a channel should be selected to be compatible with the MICE classification of the channel at the point where the components are to be installed.

Table 2 shows the parameters used to classify the local environment under the M, I, C or E criteria. While the classification of an environment is determined by the most demanding parameter within each criteria group, the selection of components may reflect the specific demands of all the parameters within the group, including those that may be less demanding than the overall classification of the environment.

--`,,```,,,,````-`-`,,`,,`,`,,`---

Copyright International Organization for Standardization
Provided by IHS under license with ISO
No reproduction or networking permitted without license from IHS Not for Resale

## F.3 The MICE system

The MICE concept is provided for the use of designers and planners to allow the specification of components to be purchased or protection (mitigation or isolation) required respectively.

Table 2 is not a basis for testing the local environment and neither is it a series of environmental criteria for the testing of components used within those environments. However the limits describing the $M_aI_bC_cE_d$ classification system are in many cases based upon existing standards.

Table F.1, Table F.2, Table F.3, Table F.4 and Table F.5 and the text following each Table show the derivation of the boundaries used in Table 2.

**Table F.1 – Derivation of boundaries for mechanical criteria in Table 2**

| **Mechanical** | **$M_1$** | **$M_2$** | **$M_3$** |
|---|---|---|---|
| Shock/bump (see Note 1) | | | |
| Peak acceleration | 40 $ms^{-2}$ | 100 $ms^{-2}$ | 250 $ms^{-2}$ |
| Vibration | | | |
| Displacement amplitude (2 Hz to 9 Hz) | 1,5 mm | 7,0 mm | 15,0 mm |
| Acceleration amplitude (9 Hz to 500 Hz) | 5 $ms^{-2}$ | 20 $ms^{-2}$ | 50 $ms^{-2}$ |
| **Shock/bump/vibration (source material)** | **IEC 60721-3-3 Class 3M2** | **< IEC 60721-3-3 Class 3M6** | **IEC 60721-3-3 Class 3M8** |
| Crush | 45 N over 25 mm (linear) min. | 1 100 N over 150 mm (linear) min. | 2 200 N over 150 mm (linear) min. |
| Impact | 1 J | 10 J | 30 J |

From IEC 60721-3-3, A.3.5:

3M1 applies to locations with insignificant vibration and shock.

In addition to the conditions covered by 3M1, 3M2 applies to locations with vibration of low significance (products mounted on light structures subject to negligible vibration).

In addition to the conditions covered by 3M5, 3M6 applies to locations where the level of vibration is high (e.g. close to heavy machines).

In addition to the conditions covered by 3M7, 3M8 applies to locations where the level of vibration is extremely high (e.g. products mounted on power hammers).

**Table F.2 – Derivation of boundaries for ingress protection criteria in Table 2**

| **Ingress** | **$I_1$** | **$I_2$** | **$I_3$** |
|---|---|---|---|
| Particulate ingress (∅ max) | 12,5 mm | 50 μm | 50 μm |
| Immersion | None | Intermittent liquid jet<br>≤12,5 l/min<br>≥6,3 mm jet<br>>2,5 m distance | Intermittent liquid jet<br>≤12,5 l/min<br>≥6,3 mm jet<br>>2,5 m distance and immersion<br>(≤1 m for ≤30 min) |

Copyright International Organization for Standardization
Provided by IHS under license with ISO
No reproduction or networking permitted without license from IHS Not for Resale

**Table F.3 – Derivation of boundaries for climatic criteria in Table 2**

| Climatic | $C_1$ | $C_2$ | $C_3$ |
|---|---|---|---|
| Ambient temperature | −10° C to +60 °C | −25° C to +70 °C | −40° C to +70 °C |
| | Existing ISO/IEC 11801 | IEC 60721-3-3 Class 3K8H | IEC 60721-3-3 Class 3K7 |
| Rate of change of temperature | 0,1° C / min | 1,0° C / min | 3,0° C / min |
| | IEC 60721-3-3 Class 3K1 | IEC 60721-3-3 Class 3K7 | IEC 61131-2 |
| Humidity | 5 % to 85 % (non-condensing) | 5 % to 95 % (condensing) | 5 % to 95 % (condensing) |
| | IEC 60721-3-3 Class 3K3 | IEC 60721-3-3 Class 3K4 | IEC 60721-3-3 Class 3K5 |
| Solar radiation | 700 $Wm^{-2}$ | 1 120 $Wm^{-2}$ | 1 120 $Wm^{-2}$ |
| | IEC 60721-3-3 Class 3K3 − 3K6 | IEC 60721-3-3 Class 3K7. IEC 60068-2-5:1975 contains a table covering wavelengths from UV to IR that totals 1 120 $Wm^{-2}$ | |

From IEC 60721-3-3, A.3.1:

3K1 applies to fully air-conditioned enclosed locations. Air temperature and humidity control is used continuously to maintain the required conditions. Installed products may be exposed to attenuated solar radiation and to movements of surrounding air due to draughts from the air-conditioning system. They are not subjected to heat radiation, condensed water, precipitation, water from sources other than rain, or formation of ice. These conditions may be found in room of such construction that a confined range of temperature and humidity may be maintained.

In addition to the conditions covered by 3K1, 3K2 applies to continuously temperature-controlled enclosed locations. Humidity is not controlled. Heating, cooling or humidification is used where necessary to maintain the required conditions, especially where there is a large difference between them and the open air-climate. Installed products may be exposed to solar radiation and to heat radiation. They may be subject to movements of surrounding air due to draughts in buildings. These conditions may be found in manned offices, workshops and other rooms for special applications.

In addition to the conditions covered by 3K2, 3K3 applies to continuously temperature-controlled enclosed locations. Humidity is not controlled. Heating or cooling is used where necessary to maintain the required conditions, especially where there is a large difference between them and the open air-climate. These conditions may be found in normal living or working areas, for example living rooms, rooms for general use (theatres, restaurants etc.), offices, shops, workshops for electronic assemblies and other electro-technical products, telecommunications centres, storage rooms for valuable and sensitive products.

In addition to the conditions covered by 3K3, 3K4 applies to temperature-controlled enclosed locations with a wide range of relative humidity. Humidity is not controlled. Installed products may be subject to condensed water and to water from sources other than rain. These conditions may be found in certain living or working areas, for example kitchens, bathrooms, workshops with processes producing high humidity, certain cellars, ordinary storage rooms, stables, garages. For the more humid open-air climates they may also be found in living rooms and rooms for general use.

In addition to the conditions covered by 3K4, 3K5 applies to enclosed locations having neither temperature nor humidity control. Heating may be used to raise low temperatures, especially where there is a large difference between them and the open air-climate. Product may be subject to the formation of ice. These conditions may be found in some entrances and staircases of buildings, garages, cellars, certain workshops, buildings in factories and industrial process plants, certain telecommunications buildings, ordinary storage rooms for frost-resistant products, farm buildings, etc.

Copyright International Organization for Standardization
Provided by IHS under license with ISO
No reproduction or networking permitted without license from IHS Not for Resale

In addition to the conditions covered by 3K4, 3K6, 3K7 and 3K8 apply to weather-protected locations having neither temperature nor humidity control. The locations may have openings to the open-air. The climatic conditions may be affected by the open-air climate and the type of building. Installed products may be exposed to solar radiation. They may also be subject to wind-driven precipitation including snow. These conditions may be found in some entrances of buildings, some garages, in sheds, shacks, lofts, telephone booths, buildings in factories and industrial process plants, unattended equipment stations, unattended buildings for telecommunications purposes, ordinary storage rooms for frost-resistant products, farm buildings, etc.

**Table F.4 – Derivation of boundaries for chemical criteria in Table 2**

| Chemical | $C_1$ | $C_2$ | $C_3$ |
|---|---|---|---|
| Liquid pollution (see Note)<br>Contaminants | Concentration × $10^{-6}$ | Concentration × $10^{-6}$ | Concentration × $10^{-6}$ |
| Sodium chloride (salt/sea water) | 0 | <0,3 | <0,3 |
| | IEC 60721-1 | | |
| Oil (dry-air concentration) | 0 | <0,005 | <0,5 |
| Sodium stearate (soap) | None | 5 × $10^4$ aqueous non-gelling | > 5 × 104 aqueous gelling |
| Detergent | None | ffs | ffs |
| Conductive materials | None | Temporary | Present |
| Gaseous pollution (see Note)<br>Contaminants | Mean/Peak<br>(Concentration × $10^{-6}$) | Mean/Peak<br>(Concentration × $10^{-6}$) | Mean/Peak<br>(Concentration × $10^{-6}$) |
| Hydrogen sulphide | <0,003/<0,01 | <0,05/<0,5 | <10/<50 |
| | The limits are taken from IEC 60654-4, for the environmental descriptions Class 1, 2 and 3. They are within the same region as those in IEC 60721-3-3, A.1 for the environmental descriptions 3C1, 3C2 and 3C4.<br>NOTE For comparison the values in IEC 60721-3-3 A.1:1994 have been converted from mg·cm$^{-3}$ using the STP density = 1,539. | | |
| Sulphur dioxide | <0,01/<0,03 | <0,1/<0,3 | <5/<10 |
| | The limits are taken from IEC 60654-4, for the environmental descriptions Class 1, 2 and 3, with the exception of Class 3 (maximum <15). They are identical to the environmental descriptions IEC 60721-3-3, A.1 for the environmental descriptions 3C1 and 3C2 and within the same region for the environmental description 3C4 (mean <4,5, maximum <14).<br>NOTE For comparison the values in IEC 60721-3-3, A.1 have been converted from mg·cm$^{-3}$ using the STP density = 2,927. | | |
| Sulphur trioxide (ffs) | <0,01/<0,03 | <0,1/<0,3 | <5/<15 |
| | There are no limits in IEC 60654-4 or IEC 60721-3-3. | | |
| Chlorine wet (>50 % humidity) | <0,000 5/<0,001 | <0,005/<0,03 | <0,05/<0,3 |
| | The limits are taken from IEC 60654-4 for the environmental descriptions Class 1, 2 and 3. There are no limits in IEC 60721-3-3. | | |
| Chlorine dry (<50 % humidity) | <0,002/<0,01 | <0,02/<0,1 | <0,2/<1,0 |
| | The limits are taken from IEC 60654-4 for the environmental descriptions Class 1, 2 and 3. They are within the same region as those in IEC 60721-3-3, A.1 for the environmental descriptions 3C1, 3C2 and 3C4. | | |

Copyright International Organization for Standardization
Provided by IHS under license with ISO
No reproduction or networking permitted without license from IHS Not for Resale

| | | | |
|---|---|---|---|
| Hydrogen chloride | -/<0,06 max. | <0,06/<0,3 | <0,6/3,0 |
| | There are no limits in IEC 60654-4. The limits are taken from IEC 60721-3-3, A.1 for the environmental descriptions 3C1, 3C2 and 3C4. | | |
| Hydrogen fluoride | <0,001/<0,005 | <0,01/<0,05 | <0,1/<1,0 |
| | The limits are taken from IEC 60654-4 for the environmental descriptions Class 1, 2 and 3. They are within the same region as those in IEC 60721-3-3, A.1 for the environmental descriptions 3C1, 3C2 and 3C4. | | |
| Ammonia | <1/<5 | <10/<50 | <50/<250 |
| | The limits are taken from IEC 60654-4 for the environmental descriptions Class 1, 2 and 3. They are within the same region as those in IEC 60721-3-3, A.1 for the environmental descriptions 3C2, 3C3 and 3C4. | | |
| Oxides of Nitrogen | <0,05/<0,1 | <0,5/<1 | <5/<10 |
| | The limits are taken from IEC 60654-4 for the environmental descriptions Class 1, 2 and 3. They are within the same region as those in IEC 60721-3-3, A.1 for the environmental descriptions 3C1, 3C2 and 3C4. | | |
| Ozone | <0,002/<0,005 | <0,025/<0,05 | <0,1/<1 |
| | The limits are taken from IEC 60654-4 for the environmental descriptions Class 1, 2 and 3. They are within the same region as those in IEC 60721-3-3 A.1 for the environmental descriptions 3C2, 3C3 and 3C4. | | |
| NOTE A single dimensional characteristic, that is Concentration $\times 10^{-6}$, was chosen to unify limits from different standards. | | | |

Definitions in IEC 60654-4 for:

Class 1 Environments sufficiently well controlled so that corrosion is not a factor in determining corrosion.

Class 2 Environments where the affects of corrosion are measurable and may be a factor in determining equipment reliability.

Class 3 Environments where there is a high probability that corrosive attack will occur.

Definitions in IEC 60721-3-3 for:

3C1R applies to locations with stringently monitored and controlled atmosphere (clean room category).

In addition to the conditions covered by 3C1L, 3C1R applies to locations where the atmosphere is continuously controlled.

In addition to the conditions covered by 3C1R, 3C1 applies to locations in rural and some urban areas with low industrial activities and moderate traffic. Increased contamination in urban areas in winter due to heating methods. Salt mist may be present in sheltered locations of coastal areas.

In addition to the conditions covered by 3C1, 3C2 applies to locations with normal levels of contaminants experienced in urban areas with scattered industrial activities or heavy traffic.

--`,,```,,,,````-`-`,,`,,`,`,,`---

Copyright International Organization for Standardization
Provided by IHS under license with ISO
No reproduction or networking permitted without license from IHS Not for Resale

In addition to the conditions covered by 3C2, 3C3 applies to locations in the immediate neighbourhood of industrial sources with chemical emissions.

In addition to the conditions covered by 3C3, 3C4 applies to locations within industrial process plants. Emissions of chemical pollutants in high concentrations may occur.

**Table F.5 – Derivation of boundaries for electromagnetic criteria in Table 2**

| Electromagnetic | $E_1$ | $E_2$ | $E_3$ |
|---|---|---|---|
| Electrostatic discharge – Contact (0,667 µC) | 4 kV | 4 kV | 4 kV |
| Electrostatic discharge – Air (0,132 µC) | 8 kV | 8 kV | 8 kV |
| | **IEC 61000-6-1/IEC 61326** | | |
| Radiated RF − AM | 3 V/m at (80 to 1 000) MHz<br>3 V/m at (1 400 to 2 000) MHz<br>1 V/m at (2 000 to 2 700) MHz | 3 V/m at (80-1 000) MHz<br>3 V/m at (1 400 to 2 000) MHz<br>1 V/m at (2 000 to 2 700) MHz | 10 V/m at (80 to 1 000) MHz<br>3 V/m at (1 400 to 2 000) MHz<br>1 V/m at (2 000 to 2 700) MHz |
| | **IEC 61000-2-5** | | |
| Conducted RF | 3 V at 150 kHz to 80 MHz | 3 V at 150 kHz to 80 MHz | 10 V at 150 kHz to 80 MHz |
| | **IEC 61000-6-1/IEC 61326** | | **IEC 61000-6-2/IEC 61326** |
| EFT/B (comms) | 500 V | 1 000 V | 1 000 V |
| | **IEC 61000-6-1** | **IEC 61000-2-5/IEC 61131-2** | **IEC 61326:2001, Annex A Table A.1** |
| Surge (transient ground potential difference) – signal, line to earth | 500 V | 1 000 V | 1 000 V |
| | **IEC 61000-6-2** | | |
| Magnetic field (50/60 Hz) | 1 $Am^{-1}$ | 3 $Am^{-1}$ | 30 $Am^{-1}$ |
| | | **IEC 61000-6-1** | **IEC 61000-6-2/IEC 61326** |
| Magnetic field (60 Hz to 20 000 Hz) | ffs | ffs | ffs |

## F.4 Guidance with respect to environmental classification

Within industrial premises electromagnetic noise may be present over a wide range of frequencies. In addition, there is a range of noise coupling mechanisms. Figure F.3 is provided as guidance in determining the frequency range of common noise generating devices that may be found in industrial premises.

In addition to generating potentially harmful fundamental frequencies, devices also generate harmonics that can be equally disruptive to telecommunications networks. The grey bars in Figure F.3 indicate the extension of the frequency range caused by the third harmonic.

Copyright International Organization for Standardization
Provided by IHS under license with ISO
No reproduction or networking permitted without license from IHS Not for Resale

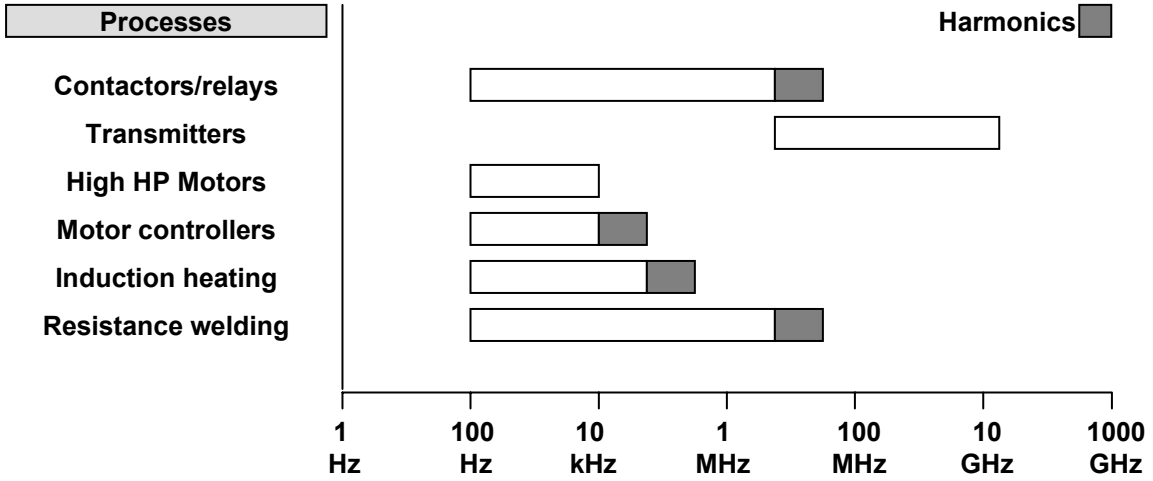


**Figure F.3 – Noise ranges of common industrial machine devices**

Table F.6 provides general guidance as to the electromagnetic environmental classification ($E_1$, $E_2$, $E_3$) for many common noise generating devices.

The level of the interfering noise is dependent on two factors:

- distance;
- magnitude of the generating device.

Copyright International Organization for Standardization
Provided by IHS under license with ISO
No reproduction or networking permitted without license from IHS
Not for Resale

**Table F.6 – Guidance for the classification of electromagnetic environments**

| Noise generating device | Distance from cabling | E Classification |
|---|---|---|
| Contactor relay | <0,5 m | $E_2$ |
| | >0,5 m | $E_1$ |
| Transmitters (<1 W) | <0,5 m | $E_3$ |
| | ≥0,5 m | $E_1$ or $E_2$ |
| Transmitters (1 W to 3 W) | <1,0 m | $E_3$ |
| | ≥1,0 m | $E_1$ or $E_2$ |
| Transmitters (TV, radio, mobile base station) | <0,3 km | $E_3$ |
| | ≥0,3 km | $E_1$ or $E_2$ |
| High HP motors | <3 m | $E_3$ |
| | >3 m | $E_1$ |
| Motor controllers | <0,5 m | $E_3$ |
| | 0,5 < 3 m | $E_2$ |
| | >3 m | $E_1$ |
| Induction Heating < 8 MW | <0,5 m | $E_3$ |
| | 0,5 < 3 m | $E_2$ |
| | >3 m | $E_1$ |
| Resistance Heating | <0,5 m | $E_2$ |
| | >0,5 m | $E_1$ |
| Fluorescent Lights | <0,15 m | $E_3$ |
| | >0,15 m | $E_1$ or $E_2$ |
| Thermostatic Switches 110 V to 230 V | <0,5 m | $E_2$ - $E_3$ |
| | >0,5 m | $E_1$ |

Table F.7 indicates the coupling mechanism for each of the interfering devices and provides assistance to designer, installer and troubleshooting personnel in mitigating or correcting for noise interference.

For example, in an environment where a relay contactor is found to cause interference, the mechanism for noise ingress is coupling through adjacent lines (EFT). To correct this situation, additional separation should be provided to reduce the magnitude of coupling. Figure F.4 provides guidance for coupling as a function of separation distance.

--`,,```,,,,````-`-`,,`,,`,`,,`---

Copyright International Organization for Standardization
Provided by IHS under license with ISO
No reproduction or networking permitted without license from IHS Not for Resale

**Table F.7 – Coupling mechanisms for common noise sources**

| Noise generating device | Noise | Coupling mechanism |
|---|---|---|
| Electric motors | Surge and EFT | Local ground, conducted |
| Drive controllers | Conducted and surge | Local ground, conducted |
| Relays and contactors | EFT | Radiated, conducted |
| Welding | EFT, induction | Radiated magnetic |
| RF induction welding | Radio frequency | Radiated, conducted |
| Material handling (paper/textile) | ESD | Radiated |
| Heating | EFT | Local ground, conducted, radiated |
| Induction heating | EFT, magnetic | Local ground, conducted, radiated |
| Radio communications | Radio frequency | Radiated |

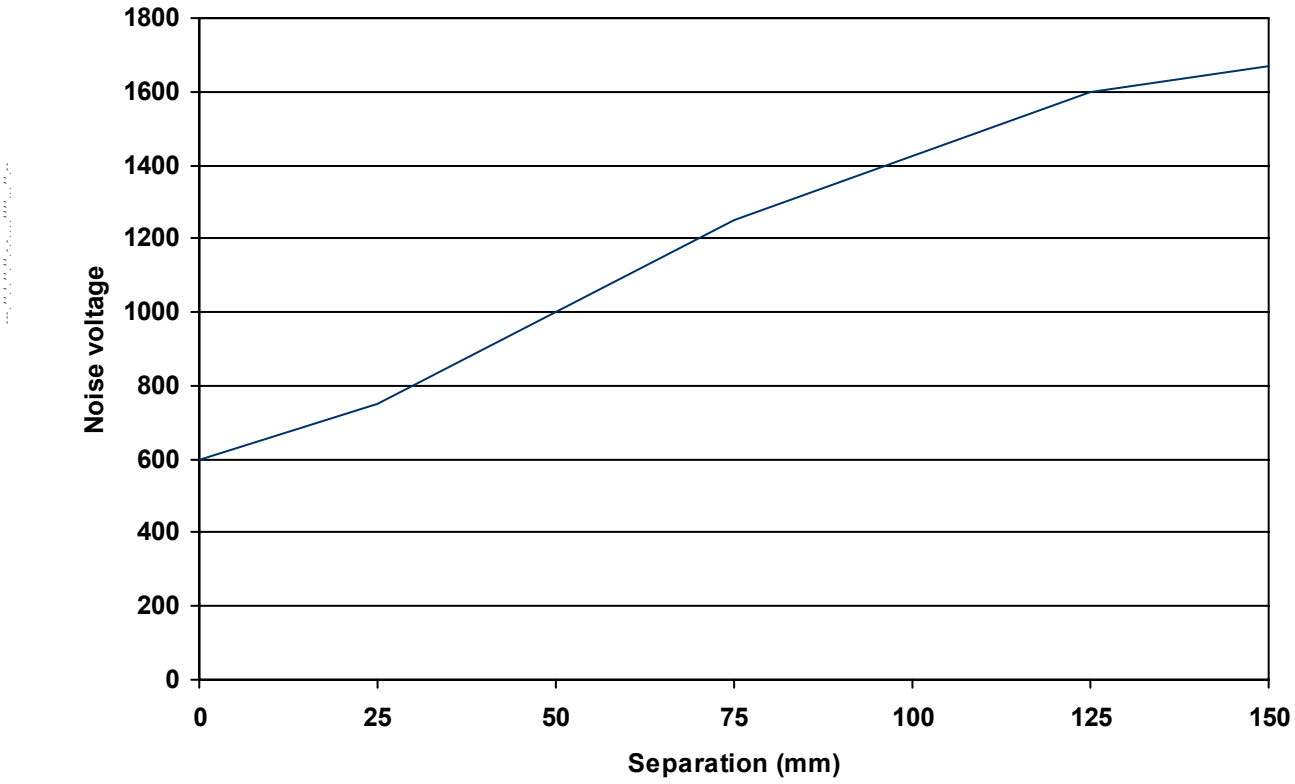


**Figure F.4 – Guidance on separation of cabling from noise sources**

Copyright International Organization for Standardization
Provided by IHS under license with ISO
No reproduction or networking permitted without license from IHS
Not for Resale

# Bibliography

IEC 60068-2-5, *Basic environmental testing procedures – Part 2: Tests – Test Sa: Simulated solar radiation at ground level*

IEC 60654-4, *Operating conditions for industrial-process measurement and control equipment – Part 4: Corrosive and erosive influences*

IEC 60721-1, *Classification of environmental conditions – Part 1: Environmental parameters and their severities*

IEC 60721-3-3, *Classification of environmental conditions – Part 3-3: Classification of groups of environmental parameters and their severities – Stationary use at weatherprotected locations*

IEC 61000-2-5, *Electromagnetic compatibility (EMC) – Part 2: Environment – Section 5: Classification of electromagnetic environments – Basic EMC publication*

IEC 61000-6-1, *Electromagnetic compatibility (EMC) – Part 6-1: Generic standards – Immunity for residential, commercial and light-industrial environments*

IEC 61000-6-2, *Electromagnetic compatibility (EMC) – Part 6-2: Generic standards – Immunity for industrial environments*

IEC 61326, *Electrical equipment for measurement, control and laboratory use – EMC requirements*

IEC 61754-20 , *Fibre optic connector interfaces – Part 20: Type LC connector family – Inserts for cabling in accordance with ISO/IEC 24702 (under consideration)*

IEC 61935-2 (all subparts), *Testing of balanced communication cabling in accordance with ISO/IEC 11801 – Part 2: Specification for the testing of balanced communication cabling in accordance with ISO/IEC 24702 – Cords – Blank detail specification*

IEC/PAS 61935-2-20: *Work area cord for class D applications – Part 2-20: Blank detail specification*

ISO/IEC 11801, Amendment 1: *Information technology – Generic cabling for customer premises (under consideration)*

---

--`,,```,,,,````-`-`,,`,,`,`,,`---

Copyright International Organization for Standardization
Provided by IHS under license with ISO
No reproduction or networking permitted without license from IHS Not for Resale

ISBN 2-8318-8850-6




**ICS 35.200**

Typeset and printed by the IEC Central Office
GENEVA, SWITZERLAND

Copyright International Organization for Standardization
Provided by IHS under license with ISO
No reproduction or networking permitted without license from IHS

Not for Resale