INTERNATIONAL STANDARD

ISO/IEC 23912

First edition
2005-11-01

Information technology — 80 mm (1,46 Gbytes per side) and 120 mm (4,70 Gbytes per side) DVD Recordable Disk (DVD-R)

Technologies de l'information — Disque enregistrable DVD (DVD-R) de 80 mm (1,46 GB par face) et 120 mm (4,7 GB par face) de diamètre

Reference number
ISO/IEC 23912:2005(E)

© ISO/IEC 2005

Copyright International Organization for Standardization
Reproduced by IHS under license with ISO
No reproduction or networking permitted without license from IHS

Not for Resale

PDF disclaimer

This PDF file may contain embedded typefaces. In accordance with Adobe's licensing policy, this file may be printed or viewed but shall not be edited unless the typefaces which are embedded are licensed to and installed on the computer performing the editing. In downloading this file, parties accept therein the responsibility of not infringing Adobe's licensing policy. The ISO Central Secretariat accepts no liability in this area.

Adobe is a trademark of Adobe Systems Incorporated.

Details of the software products used to create this PDF file can be found in the General Info relative to the file; the PDF-creation parameters were optimized for printing. Every care has been taken to ensure that the file is suitable for use by ISO member bodies. In the unlikely event that a problem relating to it is found, please inform the Central Secretariat at the address given below.

© ISO/IEC 2005

All rights reserved. Unless otherwise specified, no part of this publication may be reproduced or utilized in any form or by any means, electronic or mechanical, including photocopying and microfilm, without permission in writing from either ISO at the address below or ISO's member body in the country of the requester.

ISO copyright office
Case postale 56 • CH-1211 Geneva 20
Tel. + 41 22 749 01 11
Fax + 41 22 749 09 47
E-mail copyright@iso.org
Web www.iso.org

Published in Switzerland

--`,,```,,,,````-`-`,,`,,`,`,,`---

Copyright International Organization for Standardization
Reproduced by IHS under license with ISO
No reproduction or networking permitted without license from IHS

Not for Resale

© ISO/IEC 2005 – All rights reserved

Contents

Page

Section 1 - General 1

1 Scope 1

2 Conformance 1
2.1 Optical Disk 1
2.2 Generating system 1
2.3 Receiving system 2

3 Normative references 2

4 Terms and definitions 2

5 Conventions and notations 4
5.1 Representation of numbers 4
5.2 Names 5

6 Acronyms 5

7 General description of a disk 6

8 General requirement 7
8.1 Environments 7
8.1.1 Test environment 7
8.1.2 Operating environment 7
8.1.3 Storage environment 8
8.1.4 Transportation 8
8.2 Safety requirements 9
8.3 Flammability 9

9 Reference measurement devices 9
9.1 Pick-Up Head (PUH) 9
9.1.1 PUH for measuring recorded disks 9
9.1.2 PUH for measuring unrecorded disks 11
9.2 Measurement conditions 12
9.2.1 Recorded and unrecorded disk 12
9.2.2 Recorded disk 12
9.2.3 Unrecorded disk 12
9.3 Normalized servo transfer function 12
9.4 Reference servo for axial tracking 13
9.5 Reference servo for radial tracking 14

Section 2 - Dimensional, mechanical and physical characteristics of the disk 16

10 Dimensional characteristics 16
10.1 Overall dimensions 17
10.2 First transition area 18
10.3 Second transition area 18
10.4 Clamping Zone 18
10.5 Third transition area 18
10.6 R-Information Zone 19
10.6.1 Sub-divisions of the R-Information Zone 19
10.7 Information Zone 19
10.7.1 Sub-divisions of the Information zone 19
10.8 Track geometry 20
10.9 Channel bit length 20
10.10 Rim area 21
10.11 Remark on tolerances 21
10.12 Label 21

© ISO/IEC 2005 – All rights reserved

Copyright International Organization for Standardization
Reproduced by IHS under license with ISO
No reproduction or networking permitted without license from IHS
Not for Resale

11 Mechanical parameters 22
11.1 Mass 22
11.2 Moment of inertia 22
11.3 Dynamic imbalance 22
11.4 Sense of rotation 22
11.5 Runout 22
11.5.1 Axial runout 22
11.5.2 Radial runout 22

12 Optical parameters 23
12.1 Recorded and unrecorded disk parameters 23
12.1.1 Index of refraction 23
12.1.2 Thickness of the transparent substrate 23
12.1.3 Angular deviation 23
12.1.4 Birefringence of the transparent substrate 24
12.2 Recorded disk reflectivity 24
12.3 Unrecorded disk parameters 24
12.3.1 Polarity of reflectivity modulation 24
12.3.2 Recording power sensitivity variation 24

Section 3 - Operational signals 25

13 Operational signals for recorded disk 25
13.1 Measurement conditions 25
13.2 Read conditions 25
13.3 Recorded disk high frequency (HF) signals 25
13.3.1 Modulated amplitude 25
13.3.2 Signal asymmetry 26
13.3.3 Cross-track signal 26
13.4 Quality of signals 26
13.4.1 Jitter 26
13.4.2 Random errors 26
13.4.3 Defects 26
13.5 Servo signals 27
13.5.1 Differential phase tracking error signal 27
13.5.2 Tangential push-pull signal 27
13.6 Groove wobble signal 29
14 Operational signals for the unrecorded disk 30
14.1 Measurement conditions 30
14.2 Recording conditions 30
14.3 Basic write strategy for media testing 30
14.3.1 Definition of the write pulse 31
14.4 Servo signals 31
14.4.1 Radial push-pull tracking error signal 32
14.4.2 Defects 33
14.5 Addressing signals 33
14.5.1 Land Pre-Pit signal 33
14.5.2 Groove wobble signal 35
14.5.3 Relation in phase between wobble and Land Pre-Pit 35

Section 4 - Data format 37

15 General 37

16 Data Frames 37
16.1 Identification Data (ID) 38
16.2 ID Error Detection Code 39
16.3 RSV 39
16.4 Error Detection Code 39

17 Scrambled Frames 39

18 ECC Block configuration 40

© ISO/IEC 2005 — All rights reserved
Copyright International Organization for Standardization
Reproduced by IHS under license with ISO
No reproduction or networking permitted without license from IHS
Not for Resale

19 Recording Frames 42

20 Modulation 43

21 Physical Sectors 43

22 Suppress control of the d.c. component 45

23 Linking scheme 46
23.1 Structure of linking 46
23.2 2K-Link and 32K-Link 47
23.3 Lossless-Link 47

Section 5 - Format of the Information Zone 50

24 General description of the Information Zone 50
24.1 Layout of the Information Zone 50
24.2 Physical Sector numbering 50

25 Lead-in and Lead-out Zone 51
25.1 Lead-in Zone 51
25.1.1 Initial Zone 52
25.1.2 Buffer Zone 0 52
25.1.3 R-Physical Format Information Zone 52
25.1.4 Reference Code Zone 54
25.1.5 Buffer Zone 1 54
25.1.6 Control Data Zone 55
25.1.7 Extra Border Zone 58
25.2 Lead-out Zone 58

Section 6 - Format of the Unrecorded Zone 59

26 General description of the Unrecorded Zone 59
26.1 Layout of the Unrecorded Zone 59
26.2 ECC Block address 59
26.3 ECC Block numbering 60

27 Pre-pit Data format 60
27.1 General description 60
27.2 Pre-pit block structure 62
27.3 Pre-pit data block configuration 64
27.3.1 Relative address 65
27.3.2 ECC Block address data configuration 66
27.3.3 Parity A and Parity B 66
27.3.4 Field ID0 67
27.3.5 Field ID1 68
27.3.6 Field ID2 and ID5 70
27.3.7 Field ID3 and Field ID4 75

28 Data structure of R-Information Zone 77
28.1 Layout of Power Calibration Area and Recording Management Area 77
28.2 Structure of the Power Calibration Area 77
28.3 Data configuration of the Recording Management Area (RMA) 78
28.3.1 Sector format of the Recording Management Area 78
28.3.2 Recording Management Data (RMD) 79

Annex A (normative) **Measurement of the angular deviation α** 88

Annex B (normative) **Measurement of birefringence** 90

Annex C (normative) **Measurement of the differential phase tracking error** 93

Annex D (normative) **Measurement of light reflectance** 97

Annex E (normative) **Tapered cone for disk clamping** 99

Annex F (normative) **Measurement of jitter** 100

Annex G (normative) **8-to-16 Modulation with RLL (2,10) requirements** 103

© ISO/IEC 2005 – All rights reserved

Copyright International Organization for Standardization
Reproduced by IHS under license with ISO
No reproduction or networking permitted without license from IHS
Not for Resale

Annex H (normative) **Optimum Power Control** **113**
Annex J (normative) **Measurement of the groove wobble amplitude** **115**
Annex K (normative) **Measurement methods for the operational signals for an unrecorded disk** **117**
Annex L (normative) **NBCA Code** **118**
Annex M (normative) **Border Zone** **124**
Annex N (normative) **Write Strategy variations** **133**
Annex P (normative) **Measurement method of the Land Pre-Pit signal** **134**
Annex Q (informative) **Transportation** **135**

© ISO/IEC 2005 — All rights reserved
Copyright International Organization for Standardization
Reproduced by IHS under license with ISO
No reproduction or networking permitted without license from IHS
Not for Resale

Foreword

ISO (the International Organization for Standardization) and IEC (the International Electrotechnical Commission) form the specialized system for worldwide standardization. National bodies that are members of ISO or IEC participate in the development of International Standards through technical committees established by the respective organization to deal with particular fields of technical activity. ISO and IEC technical committees collaborate in fields of mutual interest. Other international organizations, governmental and non-governmental, in liaison with ISO and IEC, also take part in the work. In the field of information technology, ISO and IEC have established a joint technical committee, ISO/IEC JTC 1.

International Standards are drafted in accordance with the rules given in the ISO/IEC Directives, Part 2.

The main task of the joint technical committee is to prepare International Standards. Draft International Standards adopted by the joint technical committee are circulated to national bodies for voting. Publication as an International Standard requires approval by at least 75 % of the national bodies casting a vote.

Attention is drawn to the possibility that some of the elements of this document may be the subject of patent rights. ISO and IEC shall not be held responsible for identifying any or all such patent rights.

ISO/IEC 23912 was prepared by ECMA (as ECMA-359) and was adopted, under a special “fast-track procedure”, by Joint Technical Committee ISO/IEC JTC 1, *Information technology*, in parallel with its approval by national bodies of ISO and IEC.

© ISO/IEC 2005 – All rights reserved

Copyright International Organization for Standardization
Reproduced by IHS under license with ISO
No reproduction or networking permitted without license from IHS
Not for Resale

Introduction

In June 2001 eleven members proposed to ECMA TC31 to develop a standard for 120 mm and 80 mm DVD Recordable optical disks using Organic Dye recording technology and TC31 adopted this project. In April 2004 ten members proposed to TC31 to restart this project and TC31 re-activated the work that has resulted in this International Standard.

This International Standard specifies two Types of Recordable optical disks, one (Type 1S) making use of recording on only a single side of the disk and yielding a nominal capacity of 4,70 Gbytes for a 120 mm disk and 1,46 Gbytes for an 80 mm disk, the other (Type 2S) making use of recording on both sides of the disk and yielding a nominal capacity of 9,4 Gbytes for a 120 mm disk and 2,92 Gbytes for an 80 mm disk.

Copyright International Organization for Standardization
Reproduced by IHS under license with ISO
No reproduction or networking permitted without license from IHS
Not for Resale

© ISO/IEC 2005 – All rights reserved

Information technology — 80 mm (1,46 Gbytes per side) and 120 mm (4,70 Gbytes per side) DVD Recordable Disk (DVD-R)

Section 1 - General

1 Scope

This International Standard specifies the mechanical, physical and optical characteristics of an 80 mm and a 120 mm DVD Recordable disk to enable the interchange of such disks. It specifies the quality of the pre-recorded, unrecorded and the recorded signals, the format of the data, the format of the information zone, the format of the unrecorded zone, and the recording method, thereby allowing for information interchange by means of such disks. This disk is identified as a DVD Recordable (DVD-R) disk.

This International Standard specifies

- 80 mm and 120 mm nominal diameter disks that may be either single or double sided,
- the conditions for conformance,
- the environments in which the disk is to be operated and stored,
- the mechanical and physical characteristics of the disk, so as to provide mechanical interchange between data processing systems,
- the format of the pre-recorded information on an unrecorded disk, including the physical disposition of the tracks and sectors, the error correcting codes and the coding method used,
- the format of the data and the recorded information on the disk, including the physical disposition of the tracks and sectors, the error correcting codes and the coding method used,
- the characteristics of the signals from pre-recorded and unrecorded areas on the disk, enabling data processing systems to read the pre-recorded information and to write to the disks,
- the characteristics of the signals recorded on the disk, enabling data processing systems to read the data from the disk.

This International Standard provides for interchange of disks between disk drives. Together with a standard for volume and file structure, it provides for full data interchange between data processing systems.

2 Conformance

2.1 Optical Disk

A claim of conformance shall specify the type of the disk, i.e. its size and whether it is single-sided or double sided. An optical disk shall be in conformance with this International Standard if it meets the mandatory requirements specified for this type.

2.2 Generating system

A generating system shall be in conformance with this International Standard if the optical disk it generates is in accordance with 2.1.

© ISO/IEC 2005 – All rights reserved

Copyright International Organization for Standardization
Reproduced by IHS under license with ISO
No reproduction or networking permitted without license from IHS
Not for Resale

2.3 Receiving system

A receiving system shall be in conformance with this International Standard if it is able to handle an optical disk according to 2.1.

3 Normative references

The following referenced documents are indispensable for the application of this document. For dated references, only the edition cited applies. For undated references, the latest edition of the referenced document (including any amendments) applies.

ISO/IEC 8859-1, *Information technology — 8-bit single-byte coded graphic character sets — Part 1: Latin alphabet No. 1*

ISO/IEC 8859-2, *Information technology — 8-bit single-byte coded graphic character sets — Part 2: Latin alphabet No. 2*

ISO/IEC 8859-3, *Information technology — 8-bit single-byte coded graphic character sets — Part 3: Latin alphabet No. 3*

ISO/IEC 8859-4, *Information technology — 8-bit single-byte coded graphic character sets — Part 4: Latin alphabet No. 4*

ECMA-287, *Safety of electronic equipment* – 2nd edition (December 2002)

4 Terms and definitions

For the purposes of this document, the following terms and definitions apply.

4.1
Block SYNC Guard Area
The recorded area in the first ECC block of the contiguous area of which recording is started from the unrecorded area by using 32K-Link.

4.2
Border Zone
The linking region that prevents the pick-up head from over running on an unrecorded area when a disk is played back in a partially recorded state.

4.3
Channel bit
The elements by which, after modulation, the binary values ZERO and ONE are represented on the disk by marks.

4.4
Clamping Zone
The annular part of the disk within which a clamping force is applied by a clamping device.

4.5
Data Zone
The zone between the Lead-in Zone and the Lead-out Zone in which user data is recorded. In Border recording mode, Border Zone is included in Data Zone.

4.6
Data Recordable Zone
The zone that is available to record user data.

4.7
Digital Sum Value (DSV)
The arithmetic sum obtained from a bit stream by allocating the decimal value 1 to bits set to ONE and the decimal value –1 to bits set to Zero.

4.8
Disk at once recording
A recording mode in which the Lead-in Zone, the user data and the Lead-out Zone are recorded sequentially.

--`,,```,,,,````-`-,,`,,`,`,,`---
© ISO/IEC 2005 — All rights reserved
Copyright International Organization for Standardization
Reproduced by IHS under license with ISO
No reproduction or networking permitted without license from IHS
Not for Resale

4.9
Disk Reference Plane
A plane defined by the perfectly flat annular surface of an ideal spindle onto which the Clamping Zone of the disk is clamped, and which is normal to the axis of rotation.

4.10
ECC Block address
The address embossed on the land as the Pre-pit Information, which represents the absolute physical address of the track used to define the recording position of each area. The address is equal to the bit-inverted numbers from b_{23} to b_4 of the Physical Sector Number recorded in the groove.

NOTE The "ECC Block address" definition is specific to this Standard.

4.11
Error Correction Code (ECC)
A mathematical computation yielding check bytes used for the detection and correction of errors in data.

4.12
Error Detection Code (EDC)
A code designed to detect certain kinds of errors in data.

Error Detection Code consists of data and the error detection parity.

4.13
Finalization
The action in which the Lead-in Zone and the Lead-out Zone are recorded.

4.14
Groove
The wobbled guidance track.

4.15
Incremental recording
A recording mode in which the disk is recorded in several distinct recording operations (for example at different times and using different recording drives). In this recording mode, the specified linking scheme shall be used.

4.16
Information Zone
The zone comprising the Lead-in Zone, the Data Zone and the Lead-out Zone.

4.17
Land
The area between the grooves.

4.18
Land Pre-Pit (LPP)
Pits embossed on the land during the manufacture of the disk substrate, which contain address information.

4.19
Lead-in Zone
The zone comprising Physical sectors adjacent to the inside of the Data Zone.

4.20
Lead-out Zone
The zone comprising Physical sectors adjacent to the outside of the Data Zone.

© ISO/IEC 2005 – All rights reserved

Copyright International Organization for Standardization
Reproduced by IHS under license with ISO
No reproduction or networking permitted without license from IHS
Not for Resale

4.21
Recording Management Area (RMA)
The area containing the Recording Management Data (RMD), situated adjacent to the inside of the Lead-in Zone.

4.22
Recording Management Data (RMD)
The information about the recording on the disk, including information on each recording mode.

4.23
R-Information Zone
The zone comprising the Power Calibration Area (PCA) and the Recording Management Area (RMA).

4.24
RZone
Continuous ECC blocks assigned to user data during Incremental recording mode and Restricted Overwrite mode.

4.25
Sector
The smallest addressable part of a track in the information zone of a disk that can be accessed independently of other addressable parts.

4.26
Substrate
A transparent layer of the disk, provided for mechanical support of the recording or recorded layer, through which the optical beam accesses the recordable / recorded layer.

4.27
Track
A 360° turn of a continuous spiral of recorded marks or groove.

4.28
Track pitch
The distance between adjacent average physical track centrelines of the wobbled grooves for the unrecorded disk, or between adjacent physical track centrelines of the successive recorded marks for the recorded disk, measured in the radial direction.

4.29
Zone
An annular area of the disk.

5 Conventions and notations

5.1 Representation of numbers

A measured value is rounded off to the least significant digit of the corresponding specified value. For instance, it implies that a specified value of 1,26 with a positive tolerance of + 0,01 and a negative tolerance of - 0,02 allows a range of measured values from 1,235 to 1,275.

Numbers in decimal notations are represented by the digits 0 to 9.

Numbers in hexadecimal notation are represented by the hexadecimal digits 0 to 9 and A to F in parentheses.

The setting of bits is denoted by ZERO and ONE.

Numbers in binary notations and bit patterns are represented by strings of digits 0 and 1, with the most significant bit shown to the left.

© ISO/IEC 2005 — All rights reserved
Copyright International Organization for Standardization
Reproduced by IHS under license with ISO
No reproduction or networking permitted without license from IHS
Not for Resale

Negative values of numbers in binary notation are given as Two's complement.

In each field the data is recorded so that the most significant byte (MSB), identified as Byte 0, is recorded first and the least significant byte (LSB) last. In a field of 8*n* bits, bit $b_{(8n-1)}$ shall be the most significant bit (msb) and bit b_0 the least significant bit (lsb). Bit $b_{(8n-1)}$ is recorded first.

5.2 Names

The names of entities, e.g. specific tracks, fields, areas, zones, etc. are given a capital initial.

6 Acronyms

AP	Amplitude of the land Pre-Pit signal (without wobble amplitude)
AR	Aperture Ratio (of the Land Pre-Pit after recording)
BP	Byte Position
BPF	Band Pass Filter
CLV	Constant Linear Velocity
CNR	Carrier to Noise Ratio
DCC	DC Component suppress control
DSV	Digital Sum Value
ECC	Error Correction Code
EDC	Error Detection Code
HF	High Frequency
ID	Identification Data
LA	Lead-out Attribute
IED	ID Error Detection (code)
LPF	Low-Pass Filter
LPP	Land Pre-Pit
LSB	Least Significant Byte
lsb	least significant bit
MSB	Most Significant Byte
msb	most significant bit
NBCA	Narrow Burst Cutting Area
NRZI	Non Return to Zero Inverted
OPC	Optimum Power Control

© ISO/IEC 2005 – All rights reserved

Copyright International Organization for Standardization
Reproduced by IHS under license with ISO
No reproduction or networking permitted without license from IHS
Not for Resale

PBS	Polarizing Beam Splitter
PCA	Power Calibration Area
PI	Parity (of the) Inner (code)
PLL	Phase Locked Loop
PO	Parity (of the) Outer (code)
PSN	Physical Sector Number
PUH	Pick-Up Head
RBP	Relative Byte Position
RBW	Resolution Bandwidth
RESYNC	Re-Synchronization
RMA	Recording Management Area
RMD	Recording Management Data
RS	Reed-Solomon (code)
SYNC	Synchronization

7 General description of a disk

The 80 mm and 120 mm optical disks that are the subject of this International Standard consist of two substrates bonded together by an adhesive layer, so that the recording layer (single-sided disk) or recording layers (double-sided disk) are on the inside. The centring of the disk is performed on the edge of the centre hole of the assembled disk on the side currently read. Clamping is performed in the Clamping Zone. The DVD Recordable Disk (DVD-R) may be either double-sided or single-sided with respect to the number of recording layers. A double-sided disk has a recording layer on the inside of each substrate. A single-sided disk has one substrate with the recording layer on the inside and a dummy substrate without a recording layer. A recorded disk provides for the data to be read many times by an optical beam of a drive. Figure 1 shows schematically a double-sided (Type 2S) and a single-sided (Type 1S) disk.

Type 1S consists of a substrate, a single recording layer, an adhesive layer, and a dummy substrate. The recording layer can be accessed from one side only. The nominal capacity is 1,46 Gbytes for an 80 mm disk and 4,70 Gbytes for a 120 mm disk.

Type 2S consists of two substrates, two recording layers, and an adhesive layer. From one side of the disk only one recording layer can be accessed. The nominal total capacity is 2,92 Gbytes for an 80 mm disk and 9,40 Gbytes for a 120 mm disk.

© ISO/IEC 2005 — All rights reserved
Copyright International Organization for Standardization
Reproduced by IHS under license with ISO
No reproduction or networking permitted without license from IHS
Not for Resale

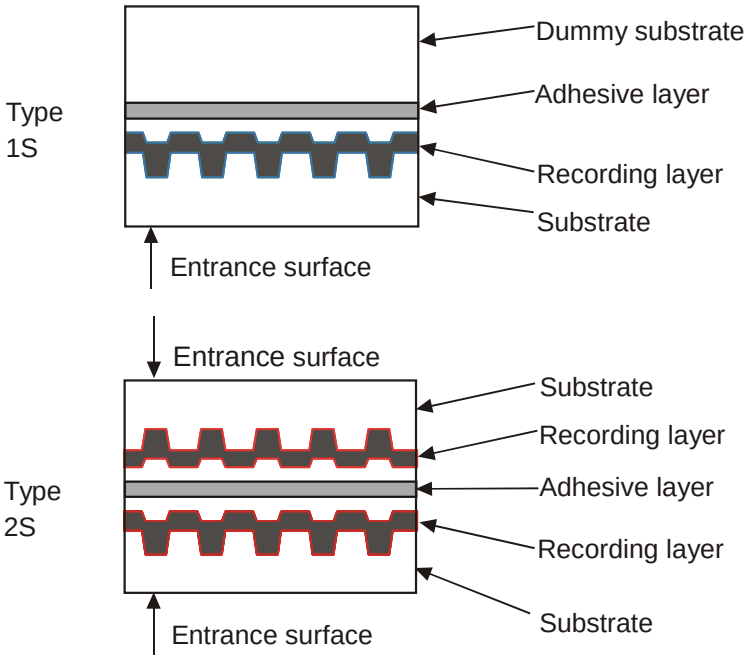

Figure 1 - Disk outline

8 General requirement

8.1 Environments

8.1.1 Test environment

The test environment is the environment where the air immediately surrounding the disk has the following properties.

	a) For dimensional measurements	b) For other measurements
temperature :	23 °C ± 2 °C	15 °C to 35 °C
relative humidity :	45 % to 55 %	45 % to 75 %
atmospheric pressure :	86 kPa to 106 kPa	86 kPa to 106 kPa

Unless otherwise stated, all tests and measurements shall be made in this test environment.

8.1.2 Operating environment

This International Standard requires that an optical disk which meets all mandatory requirements of this International Standard in the specified test environment provides data interchange over the specified ranges of environmental parameters in the operating environment.

Disks used for data interchange shall be operated under the following conditions, when mounted in the drive supplied with voltage and measured on the outside surface of the disk.

© ISO/IEC 2005 – All rights reserved
Copyright International Organization for Standardization
Reproduced by IHS under license with ISO
No reproduction or networking permitted without license from IHS
Not for Resale

8.1.2.1 Environmental conditions during reading

The disk exposed to storage conditions shall be conditioned in the operating environment for at least two hours before operating.

temperature : -25 °C to 70 °C

relative humidity : 3 % to 95 %

absolute humidity : 0,5 g/m^3 to 60 g/m^3

temperature gradient : 15 °C/h max.

relative humidity gradient : 10 %/h max.

There shall be no condensation of moisture on the disk.

8.1.2.2 Environmental conditions during recording

The disk exposed to storage conditions shall be conditioned in the recording environment for at least two hours before operating.

temperature : -5 °C to 55 °C

relative humidity : 3 % to 95 %

absolute humidity : 0,5 g/m^3 to 30 g/m^3

There shall be no condensation of moisture on the disk.

8.1.3 Storage environment

The storage environment is the environment where the air immediately surrounding the optical disk shall have the following properties.

temperature : -20 °C to 50 °C

relative humidity : 5 % to 90 %

absolute humidity : 1 g/m^3 to 30 g/m^3

atmospheric pressure : 75 kPa to 106 kPa

temperature variation : 15 °C /h max.

relative humidity variation : 10 %/h max.

8.1.4 Transportation

This International Standard does not specify requirements for transportation; guidance is given in Annex Q.

© ISO/IEC 2005 — All rights reserved
Copyright International Organization for Standardization
Reproduced by IHS under license with ISO
No reproduction or networking permitted without license from IHS
Not for Resale

8.2 Safety requirements

The disk shall satisfy the requirements of Standard ECMA-287, when used in the intended manner or in any foreseeable use in an information system.

8.3 Flammability

The disk shall be made from materials that comply with the flammability class for HB materials, or better, as specified in Standard ECMA-287.

9 Reference measurement devices

The reference measurement devices for recorded disks and for unrecorded disks shall be used for the measurements of optical parameters for conformance with this International Standard. The critical components of these devices have specific properties defined in this clause.

9.1 Pick-Up Head (PUH)

9.1.1 PUH for measuring recorded disks

The optical system for measuring the optical parameters is shown in Figure 2. The optical system shall be used to measure the parameters specified for the recorded disk. Different components and locations of the components are permitted, provided that the performance remains the same as the set-up in Figure 2. The optical system shall be such that the detected light reflected from the entrance surface of the disk is minimized so as not to influence the accuracy of measurement. The combination of the polarizing beam splitter C with the quarter-wave plate D separates the incident optical beam and the beam reflected by the optical disk F. The beam splitter C shall have a p-s intensity reflectance ratio of at least 100. Optics G generates an astigmatic difference and collimates the light reflected by the recorded layer of the optical disk F for astigmatic focusing and read-out. The position of the quadrant photo detector H shall be adjusted so that the light spot becomes a circle the centre of which coincides with the centre of the quadrant photo detector H when the objective lens is focused on the recorded layer. An example of such a photo detector H is shown in Figure 2.

© ISO/IEC 2005 – All rights reserved

Copyright International Organization for Standardization
Reproduced by IHS under license with ISO
No reproduction or networking permitted without license from IHS
Not for Resale

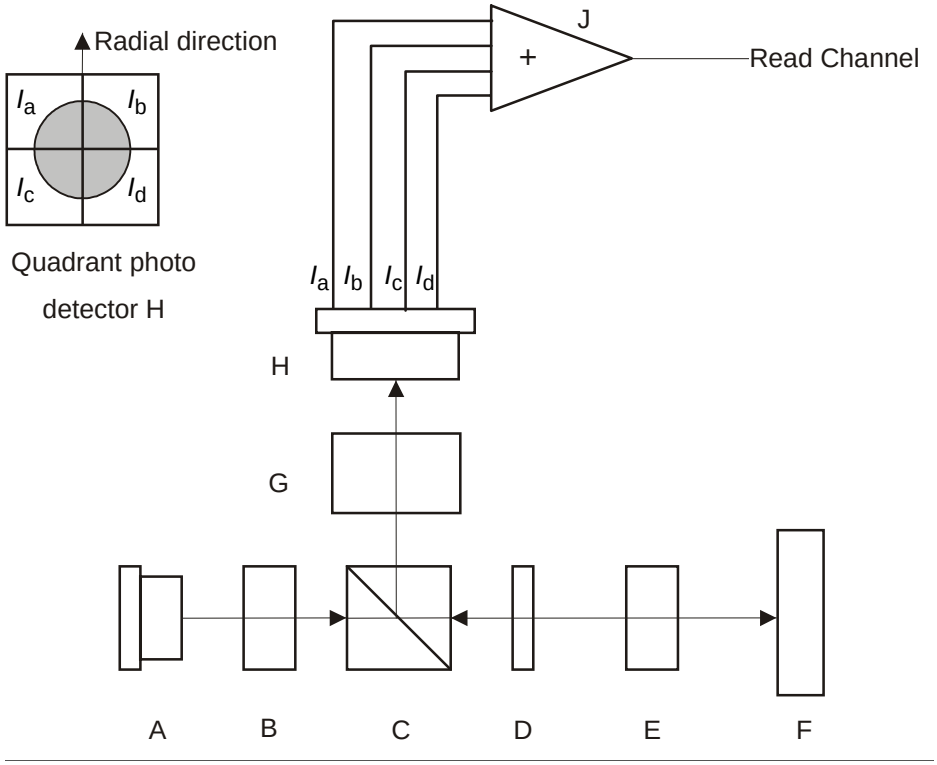

A Laser diode

B Collimator lens

C Polarizing beam splitter

D Quarter-wave plate

E Objective lens

F Optical disk

G Optics for the astigmatic focusing method

H Quadrant photo detector

I_a, I_b, I_c, I_d Output currents from the quadrant photo detector

J d.c. coupled amplifier

Figure 2 - Optical system of PUH for measuring recorded disk

The focused optical beam used for reading data shall have the following properties:

Wavelength (λ)	650 nm ± 5 nm
Polarization of the light	circular
Polarizing beam splitter	shall be used unless otherwise stated
Numerical aperture	0,60 ± 0,01
Light intensity at the rim of the pupil of the objective lens	60 % to 70 % of the maximum intensity level in radial direction, and over 90 % of the maximum intensity level in the tangential direction
Wave front aberration after passing through an ideal substrate (Thickness: 0,6 mm and index of refraction: 1,56)	0,033 λ rms max.

© ISO/IEC 2005 — All rights reserved
Copyright International Organization for Standardization
Reproduced by IHS under license with ISO
No reproduction or networking permitted without license from IHS
Not for Resale

Relative intensity noise (RIN)
10 log [(a.c. light power density / Hz) / d.c. light power] -134 dB/Hz max.

9.1.2 PUH for measuring unrecorded disks

The optical system for measuring the parameters is shown in Figure 3. The optical system shall be used to measure the parameters specified for the unrecorded disk and for making the recordings that are necessary for disk measurements. Different components and locations of the components are permitted, provided that the performance remains the same as the set-up in Figure 3. The optical system shall be such that the detected light reflected from the entrance surface of the disk is minimized so as not to influence the accuracy of the measurements.

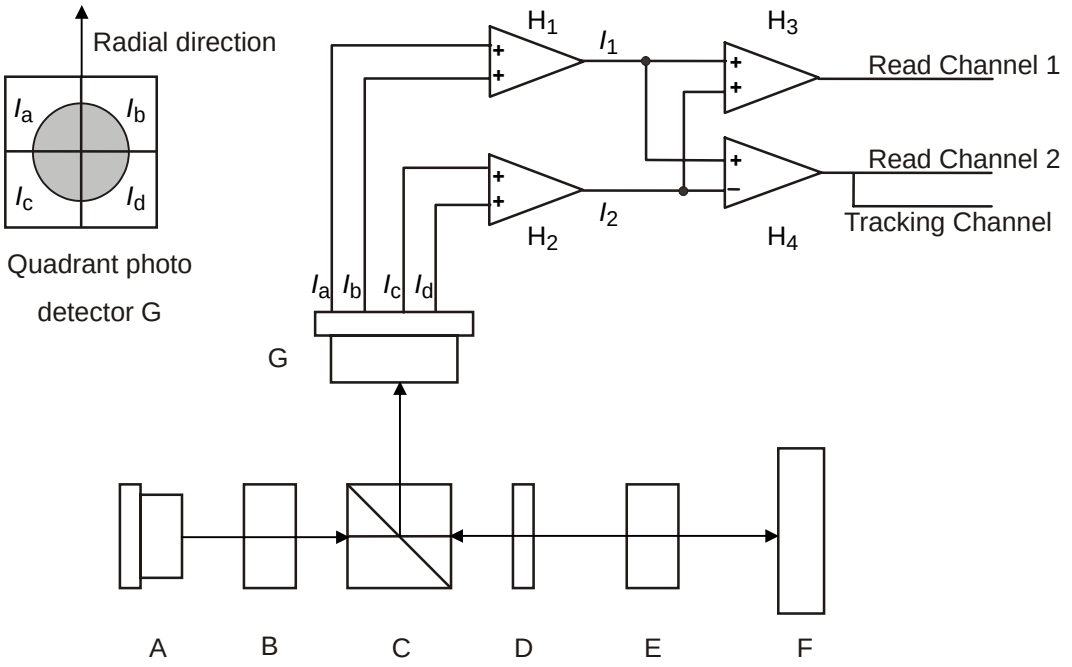

A Laser diode

B Collimator lens

C Polarizing beam splitter

D Quarter-wave plate

E Objective lens

F Optical disk

G Quadrant photo detector

H_1, H_2, H_3, H_4 d.c.-coupled amplifier

I_a, I_b, I_c, I_d Output currents from the quadrant photo detector

Figure 3 - Optical system of PUH for measuring unrecorded disks

The combination of polarizing beam splitter C and a quarter-wave plate D shall separate the entrance optical beam from a laser diode A and the reflected optical beam from an optical disk F. The beam splitter C shall have a p-s intensity reflectance ratio of at least 100.

The focused optical beam used for writing and reading data shall have the following properties:

Wavelength (λ) $650\ \text{nm}^{+10\ \text{nm}}_{-5\ \text{nm}}$

Polarization of the light circular

© ISO/IEC 2005 – All rights reserved

Copyright International Organization for Standardization
Reproduced by IHS under license with ISO
No reproduction or networking permitted without license from IHS
Not for Resale

Numerical aperture	0,60 ± 0,01
Light intensity at the rim of the pupil of the objective lens	over 40 % of the maximum intensity level in the radial direction and over 50 % of the maximum intensity level in the tangential direction
Wave front aberration after passing through an ideal substrate (Thickness: 0,6 mm and index of refraction: 1,56)	0,033 λ rms max.
Relative intensity noise (RIN) of the laser diode 10 log [(a.c. light power density /Hz) / d.c. light power]	- 130 dB/Hz max.

9.2 Measurement conditions

9.2.1 Recorded and unrecorded disk

Scanning velocity at a Channel bit rate of 26,15625 Mbit/s	3,49 m/s ± 0,03 m/s
Clamping force	2,0 N ± 0,5 N
Clamping Zone	See 10.4 and Annex A.
Tapered cone angle	40,0°± 0,5° see Annex E

9.2.2 Recorded disk

The measuring conditions for the recorded disk operational signals shall be as specified in Annex F.

9.2.3 Unrecorded disk

The measuring conditions for the unrecorded disk operational signals shall be as specified in Annex K.

9.3 Normalized servo transfer function

In order to specify the servo system for axial and radial tracking, a function H_s is used (equation I). It specifies the nominal values of the open-loop transfer function H of the Reference Servo(s) in the frequency range 23,1 Hz to 10 kHz.

$$H_s(i\omega) = \frac{1}{3} \times \left(\frac{\omega_0}{i\omega} \right)^2 \times \frac{1 + \frac{3i\omega}{\omega_0}}{1 + \frac{i\omega}{3\omega_0}} \qquad \text{(I)}$$

where

$\omega = 2\pi f$

$\omega_0 = 2\pi f_0$

$i = \sqrt{-1}$

f_0 is the 0 dB crossover frequency of the open loop transfer function.

© ISO/IEC 2005 — All rights reserved
Copyright International Organization for Standardization
Reproduced by IHS under license with ISO
No reproduction or networking permitted without license from IHS
Not for Resale

The crossover frequencies of the lead-lag network of the servo are given by

lead break frequency : $f_1 = f_0 \times 1/3$

lag break frequency : $f_2 = f_0 \times 3$

9.4 Reference servo for axial tracking

For an open loop transfer function H of the Reference Servo for axial tracking, $|1+H|$ is limited as schematically shown by the shaded surface of Figure 4.

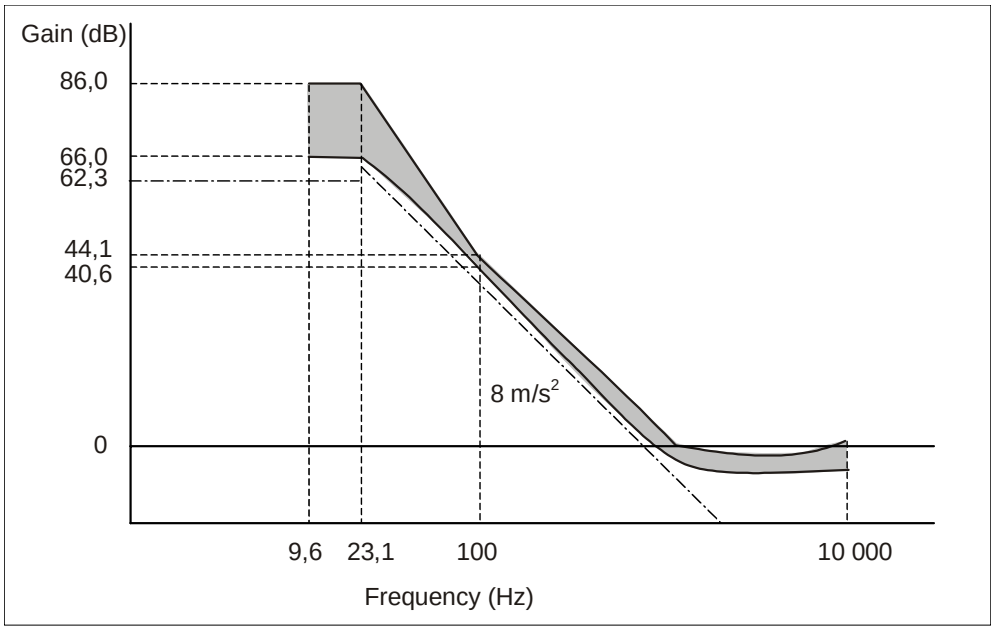

Figure 4 - Reference servo for axial tracking

Bandwidth 100 Hz to 10 kHz

$|1 + H|$ shall be within 20 % of $|1+H_s|$.

The crossover frequency $f_0 = \omega_0 / 2\pi$ shall be specified by equation (II), where α_{max} shall be 1,5 times larger than the expected maximum axial acceleration of 8 m/s^2. The tracking error e_{max} shall not exceed 0,23 μm. Thus, the crossover frequency f_0 shall be

$$f_0 = \frac{1}{2\pi}\sqrt{\frac{3\times\alpha_{max}}{e_{max}}} = \frac{1}{2\pi}\sqrt{\frac{3\times 8\times 1{,}5}{0{,}23\times 10^{-6}}} = 2{,}0\text{kHz} \qquad \text{(II)}$$

The axial tracking error e_{max} is the peak deviation measured axially above or below the 0 level.

Bandwidth 23,1 Hz to 100 Hz

$|1 + H|$ shall be within the limits defined by the following four points.

40,6 dB at 100 Hz ($|1 + H_s|$ - 20% at 100 Hz)

66,0 dB at 23,1 Hz ($|1 + H_s|$ - 20% at 23,1 Hz)

© ISO/IEC 2005 - All rights reserved

Copyright International Organization for Standardization
Reproduced by IHS under license with ISO
No reproduction or networking permitted without license from IHS
Not for Resale

86,0 dB at 23,1 Hz ($|1 + H_s|$ - 20% at 23,1 Hz add 20 dB)

44,1 dB at 100 Hz ($|1 + H_s|$ + 20% at 100 Hz)

Bandwidth 9,6 Hz to 23,1 Hz

$|1 + H|$ shall be between 66,0 dB and 86,0 dB.

9.5 Reference servo for radial tracking

For an open-loop transfer function, H, of the Reference servo for radial tracking, $|1+ H|$ shall be limited within the shaded area shown in Figure 5.

The radial track deviation is the peak deviation measured radially inward or outward from the 0 level.

Bandwidth from l00 Hz to 10k Hz

$|1 + H|$ shall be within 20 % of $|1+H_s|$.

The crossover frequency $f_0 = \omega_0 / 2\pi$ shall be given by the equation (III), where α_{max} shall be 1,5 times as large as the expected radial acceleration of 1,1 m/s^2 and e_{max} shall not exceed 0,022 μm. Thus the crossover frequency f_0 shall be:

$$f_0 = \frac{1}{2\pi}\sqrt{\frac{3 \times \alpha_{max}}{e_{max}}} = \frac{1}{2\pi}\sqrt{\frac{3 \times 1{,}1 \times 1{,}5}{0{,}022 \times 10^{-6}}} = 2{,}4 \text{ kHz} \qquad \text{(III)}$$

Bandwidth from 23,1 Hz to 100Hz

$|1+ H|$ shall be within the limits enclosed by the following four points.

43,7 dB at 100 Hz ($|1 + H_s|$ - 20 % at 100 Hz)

69,2 dB at 23,1 Hz ($|1 + H_s|$ - 20 % at 23,1 Hz)

89,2 dB at 23,1 Hz ($|1 + H_s|$ - 20 % at 23,l Hz add 20 dB)

47,3 dB at 100 Hz ($|1 + H_s|$ + 20 % at 100 Hz)

Bandwidth from 9,6 Hz to 23,1 Hz

$|1 + H|$ shall be between 69,2 dB and 89,2 dB.

© ISO/IEC 2005 — All rights reserved
Copyright International Organization for Standardization
Reproduced by IHS under license with ISO
No reproduction or networking permitted without license from IHS
Not for Resale

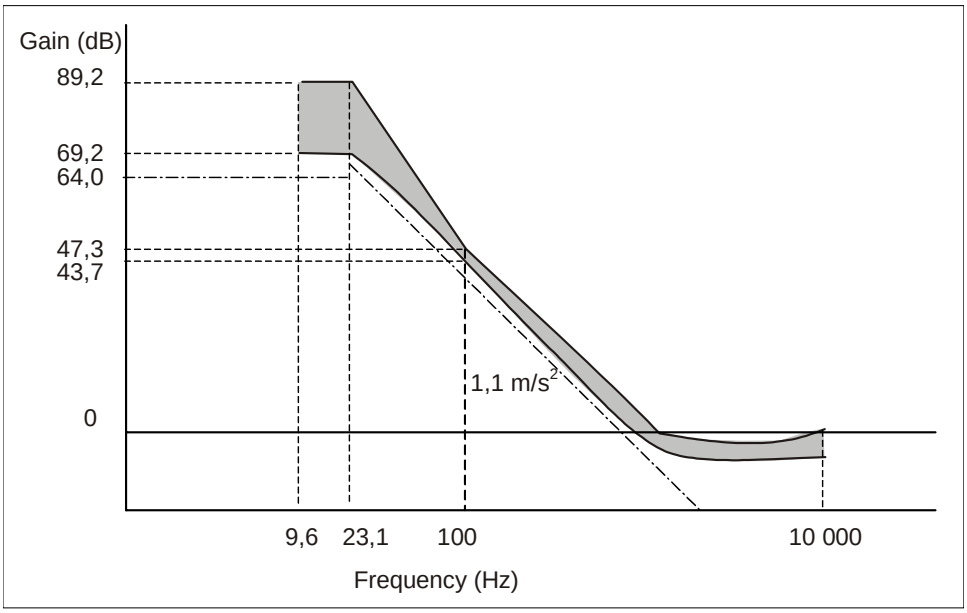

Figure 5 - Reference servo for radial tracking

© ISO/IEC 2005 – All rights reserved
Copyright International Organization for Standardization
Reproduced by IHS under license with ISO
No reproduction or networking permitted without license from IHS
Not for Resale

Section 2 - Dimensional, mechanical and physical characteristics of the disk

10 Dimensional characteristics

Dimensional characteristics are specified for those parameters deemed mandatory for interchange and compatible use of the disk. Where there is freedom of design, only the functional characteristics of the elements described are indicated. Figures 6, 7 and 8 show the dimensional requirements in summarized form. The different parts of the disk are described from the centre hole to the outside rim.

The dimensions are referred to two Reference Planes P and Q.

Reference Plane P is the primary Reference Plane. It is the plane on which the bottom surface of the Clamping Zone (see 10.4) rests.

Reference Plane Q is the plane parallel to Reference Plane P at the height of the top surface of the Clamping Zone.

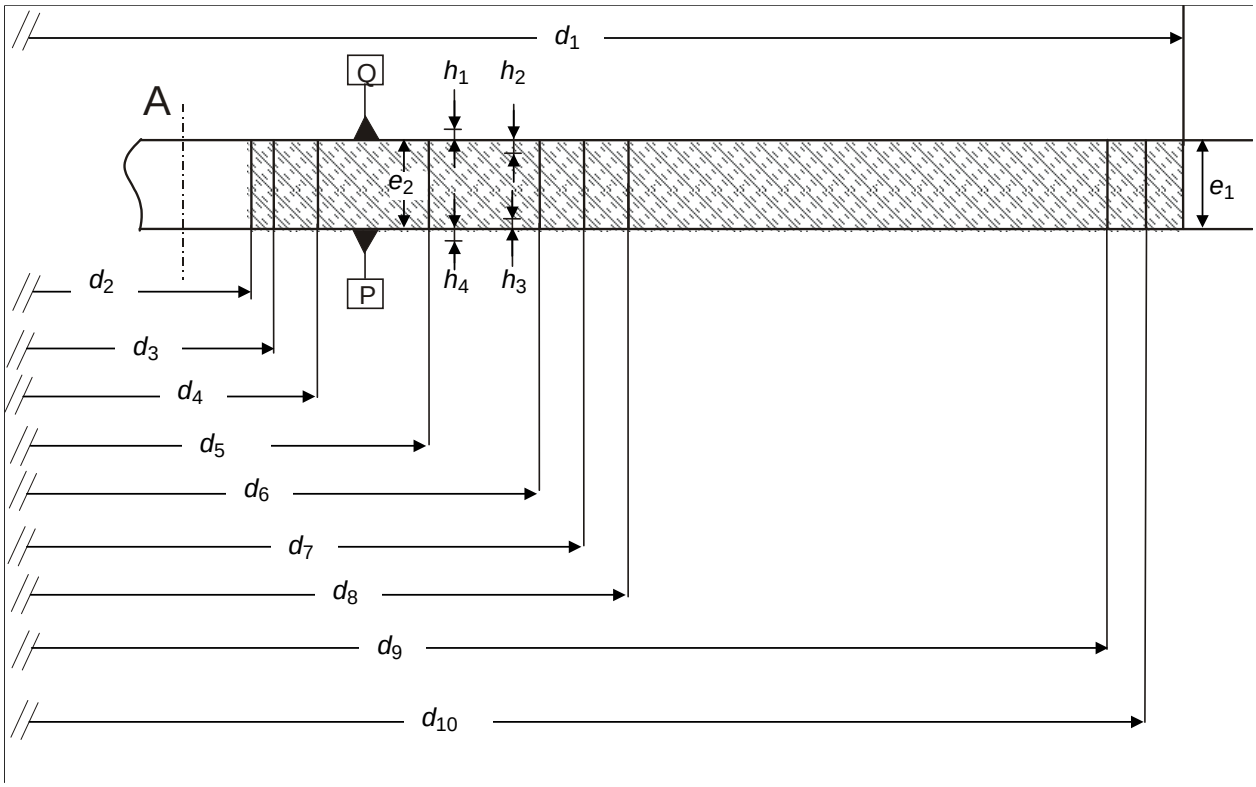

Figure 6 - Areas of the disk

© ISO/IEC 2005 — All rights reserved
Copyright International Organization for Standardization
Reproduced by IHS under license with ISO
No reproduction or networking permitted without license from IHS
Not for Resale

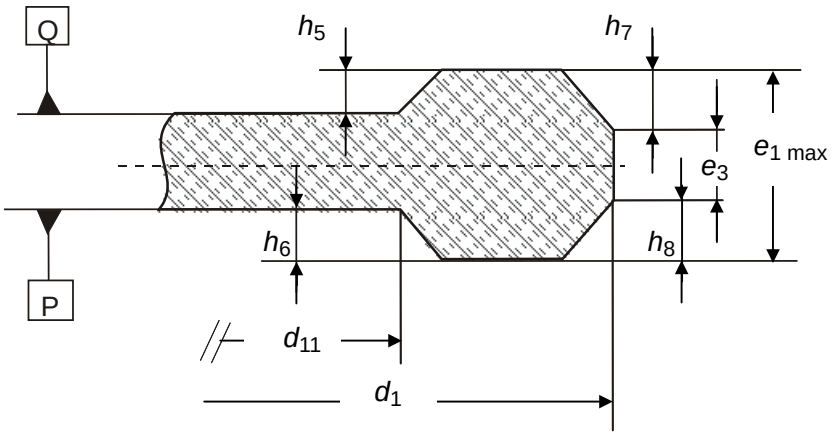

Figure 7 - Rim area

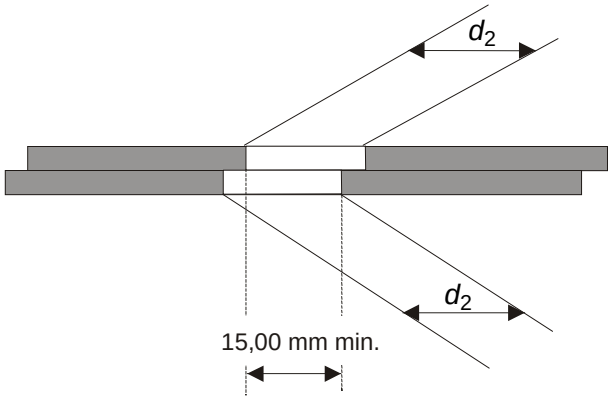

Figure 8 - Hole of the assembled disk

10.1 Overall dimensions

The 120 mm disk shall have an overall diameter

d_1 = 120,00 mm ± 0,30 mm

The 80 mm disk shall have an overall diameter

d_1 = 80,00 mm ± 0,30 mm

The centre hole of a substrate or a dummy substrate shall have a diameter

$$d_2 = 15{,}00\ ^{+\ 0{,}15\ \text{mm}}_{-\ 0{,}00\ \text{mm}}$$

The diameter of the hole of an assembled disk, i.e. with both parts bonded together, shall be 15,00 mm min. See Figure 8. There shall be no burr on both edges of the centre hole.

The edge of the centre hole shall be rounded off or chamfered. The rounded radius shall be 0,1 mm max. The chamfer shall extend over a height of 0,1 mm max.

--`,,```,,,,````-`-`,,`,,`,`,,`---

© ISO/IEC 2005 – All rights reserved
Copyright International Organization for Standardization
Reproduced by IHS under license with ISO
No reproduction or networking permitted without license from IHS
Not for Resale

The thickness of the disk, including adhesive layer and label(s), shall be

$$e_1 = 1{,}20\ \text{mm}\ {}^{+\,0{,}30\ \text{mm}}_{-\,0{,}06\ \text{mm}}$$

See Figure 6.

10.2 First transition area

In the area defined by diameter d_2 and

d_3 = 16,0 mm min.

the surface of the disk is permitted to be above the Reference Plane P and/or below Reference Plane Q by 0,10 mm max. See Figure 6.

10.3 Second transition area

This area shall extend between diameter d_3 and diameter

d_4 = 22,0 mm max.

In this area the disk may have an uneven surface of burrs up to 0,05 mm max. beyond Reference Planes P and/or Q. See Figure 6.

10.4 Clamping Zone

This zone shall extend between diameter d_4 and diameter

d_5 = 33,0 mm min.

Each side of the Clamping Zone shall be flat within 0,1 mm. The top side of the Clamping Zone, i.e. that of Reference Plane Q shall be parallel to the bottom side, i.e. Reference Plane P within 0,1 mm.

In the Clamping Zone the thickness e_2 of the disk shall be

$$e_2 = 1{,}20\ \text{mm}\ {}^{+\,0{,}20\ \text{mm}}_{-\,0{,}10\ \text{mm}}$$

See Figure 6.

10.5 Third transition area

This area shall extend between diameter d_5 and diameter

d_6 = 40,0 mm max. for the 120mm diameter disk or

d_6 = 37,0 mm max. for the 80mm diameter disk.

In this area the top surface is permitted to be above the Reference Plane Q by

h_1 = 0,25 mm max.

or below Reference Plane Q by

© ISO/IEC 2005 — All rights reserved
Copyright International Organization for Standardization
Reproduced by IHS under license with ISO
No reproduction or networking permitted without license from IHS
Not for Resale

h_2 = 0,10 mm max.

The bottom surface is permitted to be above Reference Plane P by

h_3 = 0,10 mm max.

or below Reference Plane P by

h_4 = 0,25 mm max.

See Figure 6.

10.6 R-Information Zone

The R-Information Zone shall extend from d_7 = 44,00 mm min. which is the beginning of the Power Calibration Area to the beginning of the Lead-in Zone as specified in clause 28.

In the R-Information Zone the thickness of the disk shall be equal to e_1 specified in 10.1

See Figure 6.

10.6.1 Sub-divisions of the R-Information Zone

The main parts of the R-Information Zone are

- the Power Calibration Area (PCA)
- the Recording Management Area (RMA)

10.7 Information Zone

The Information Zone shall extend from the beginning of the Lead-in Zone to diameter d_{10} the value of which is specified in Table 1.

In the Information Zone the thickness of the disk shall be equal to e_1 specified in 10.1. See Figure 6.

10.7.1 Sub-divisions of the Information zone

The main parts of the Information Zone are

- the Lead-in Zone
- the Data Zone
- the Lead-out Zone

10.7.1.1 Lead-in Zone

The Lead-in Zone shall extend between the outer diameter of the R-Information Zone as specified in 26.3 and diameter d_8. See Figure 6.

© ISO/IEC 2005 – All rights reserved
Copyright International Organization for Standardization
Reproduced by IHS under license with ISO
No reproduction or networking permitted without license from IHS
Not for Resale

10.7.1.2 Data Zone

The Data Zone shall start at

$$d_8 = 48{,}0\ \text{mm}\ {}^{+\ 0{,}0\ \text{mm}}_{-\ 0{,}2\text{mm}}$$

and shall end at

d_9 = 116,0 mm max. for the 120 mm diameter disk or

d_9 = 76,0 mm max. for the 80 mm diameter disk.

See Figure 6.

10.7.1.3 Lead-out Zone

The Lead-out Zone shall start at d_9 and shall end at d_{10}. The value of d_{10} depends on the length of the Data Zone as shown in Table 1. See Figure 6.

Table 1 – End of the Information Zone

Outer diameter d_9 of the Data Zone	Value of diameter d_{10} for the 120 mm disk	Value of diameter d_{10} for the 80 mm disk
Less than 68,0 mm	70,0 mm min.	
68,0 mm to 115,0 mm	Outer diameter of the Data Zone + 2,0 mm min.	
115,0 mm to 116,0 mm	117,0 mm min.	
Less than 68,0 mm		70,0 mm min.
68,0 mm to 75,0 mm		Outer diameter of the Data Zone + 2,0 mm min.
75,0 mm to 76,0 mm		77,0 mm min.

10.8 Track geometry

In the R-Information Zone and Information Zone tracks are constituted by a 360° turn of a spiral.

The track pitch averaged over the data zone shall be 0,74 µm ± 0,01 µm.

The maximum deviation of the track pitch from 0,74 µm shall be ± 0,03 µm.

10.9 Channel bit length

The R-Information Zone and Information Zone shall be recorded in CLV mode. The Channel bit length averaged over the Data Zone shall be 133,3 nm ± 1,4 nm.

© ISO/IEC 2005 — All rights reserved
Copyright International Organization for Standardization
Reproduced by IHS under license with ISO
No reproduction or networking permitted without license from IHS
Not for Resale

10.10 Rim area

The rim area shall be that area extending from diameter

d_{11} = 118,0 mm min. for the 120 mm disk or

d_{11} = 78,0 mm min. for the 80 mm disk

to diameter d_1. In this area the top surface is permitted to be above Reference Plane Q by

h_5 = 0,1 mm max.

and the bottom surface is permitted to be below Reference Plane P by

h_6 = 0,1 mm max.

The total thickness of this area shall not be greater than 1,50 mm, i.e. the maximum value of e_1. The thickness of the rim proper shall be

e_3 = 0,6 mm min.

The outer edges of the disk shall be either rounded off with a rounding radius of 0,2 mm max. or be chamfered over

h_7 = 0,2 mm max.

h_8 = 0,2 mm max.

See Figure 7.

10.11 Remark on tolerances

All heights specified in the preceding clauses and indicated by h_i are independent from each other. This means that, for example, if the top surface of the third transition area is below Reference Plane Q by up to h_2, there is no implication that the bottom surface of this area has to be above Reference Plane P by up to h_3. Where dimensions have the same - generally maximum - numerical value, this does not imply that the actual values have to be identical.

10.12 Label

The label shall be placed on the side of the disk opposite the entrance surface for the information to which the label is related. The label shall be placed either on an outer surface of the disk or inside the disk bonding plane. In the former case, the label shall not extend over the Clamping Zone. In the latter case, the label may extend over the Clamping Zone. In both cases, the label shall not extend over the rim of the centre hole nor over the outer edge of the disk. The label should not affect the performance of the disk. Labels shall not be attached to either of the read out surfaces of a double sided disk.

--`,,```,,,,````-`-`,,`,,`,`,,`---
© ISO/IEC 2005 – All rights reserved
Copyright International Organization for Standardization
Reproduced by IHS under license with ISO
No reproduction or networking permitted without license from IHS
Not for Resale

11 Mechanical parameters

11.1 Mass

The mass of the 120 mm disk shall be in the range 13 g to 20 g.

The mass of the 80 mm disk shall be in the range 6 g to 9 g.

11.2 Moment of inertia

The moment of inertia of the 120 mm disk, relative to its rotation axis, shall not exceed 0,040 g·m^2.

The moment of inertia of the 80 mm disk, relative to its rotation axis, shall not exceed 0,010 g·m^2.

11.3 Dynamic imbalance

The dynamic imbalance of the 120 mm disk, relative to its rotation axis, shall not exceed 0,010 g·m.

The dynamic imbalance of the 80 mm disk, relative to its rotation axis, shall not exceed 0,0045 g·m.

11.4 Sense of rotation

The sense of rotation of the disk shall be counter clockwise as seen by the optical system.

11.5 Runout

11.5.1 Axial runout

When measured by the PUH with the Reference Servo for axial tracking, the disk rotating at the scanning velocity, the deviation of the recorded layer from its nominal position in the direction normal to the Reference Planes shall not exceed 0,3 mm for the 120 mm disk and 0,2 mm for the 80 mm disk.

The residual tracking error below 10 kHz, measured using the Reference Servo for axial tracking, shall be less than 0,23 µm. The measuring filter shall be a Butterworth LPF, f_c (-3dB): 10 kHz, slope: -80 dB/decade.

11.5.2 Radial runout

The runout of the outer edge of the disk shall be less than 0,30 mm, peak-to-peak.

The radial runout of tracks at the rotational frequency determined by the scanning velocity shall be less than 70 µm, peak-to-peak.

The residual tracking error below 1,1 kHz, measured using the Reference Servo for radial tracking, shall be less than 0,022 µm. The measuring filter shall be a Butterworth LPF, f_c (-3dB): 1,1 kHz, slope: -80 dB/decade.

The rms noise value of the residual error signal in the frequency band from 1,1 kHz to 10 kHz, measured with an integration time of 20 ms, using the Reference Servo for radial tracking, shall be less than 0,016 µm. The measuring filter shall be a Butterworth BPF, frequency range (-3dB): 1,1 kHz, slope: +80 dB/decade to 10 kHz, slope: - 80 dB/decade.

© ISO/IEC 2005 — All rights reserved
Copyright International Organization for Standardization
Reproduced by IHS under license with ISO
No reproduction or networking permitted without license from IHS
Not for Resale

12 Optical parameters

12.1 Recorded and unrecorded disk parameters

12.1.1 Index of refraction

The index of refraction of the substrate shall be 1,55 ± 0,10.

12.1.2 Thickness of the transparent substrate

The thickness of the substrate shall be determined by its index of refraction as specified in Figure 9.

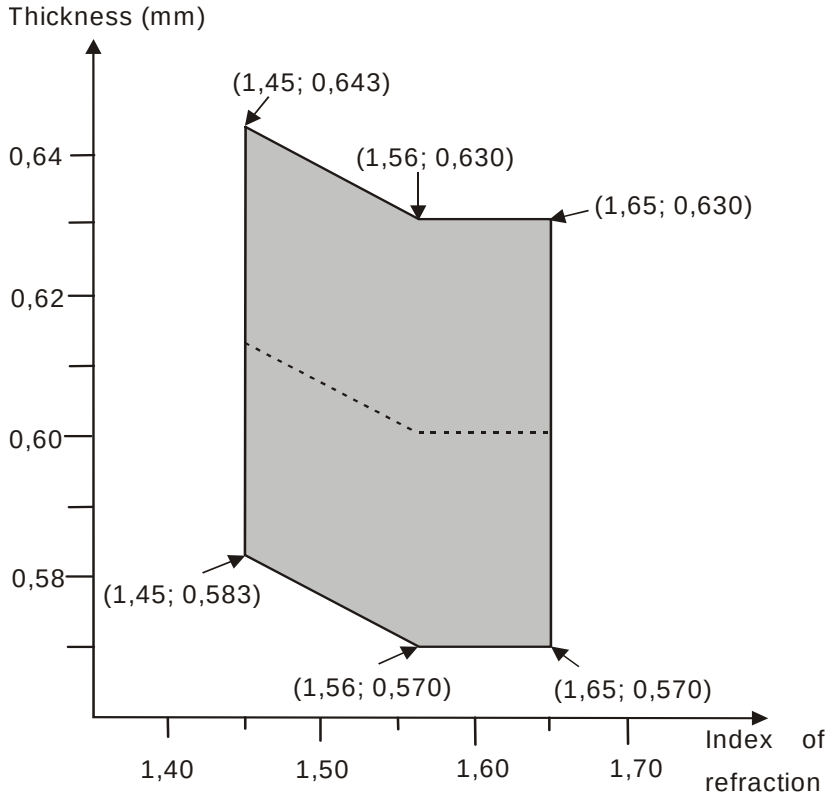

Figure 9 - Substrate thickness as a function of the index of refraction

12.1.3 Angular deviation

The angular deviation is the angle α between a parallel incident beam and the reflected beam. The incident beam shall have a diameter in the range 0,3 mm to 3,0 mm. This angle includes deflection due to the entrance surface and to unparallelism of the recorded layer, see Annex A, Figure A.1. It shall meet the following requirements when measured according to Annex A.

In radial direction: α = 0,80° max.

In tangential direction: α = 0,30° max.

© ISO/IEC 2005 – All rights reserved

Copyright International Organization for Standardization
Reproduced by IHS under license with ISO
No reproduction or networking permitted without license from IHS
Not for Resale

12.1.4 Birefringence of the transparent substrate

The birefringence of the transparent substrate shall be 100 nm max. when measured according to Annex B.

12.2 Recorded disk reflectivity

When measured according to Annex D, the reflectivity of the recorded layer(s) shall be 45 % to 85 % (PUH with PBS) or 60 % to 85 % (PUH without PBS).

12.3 Unrecorded disk parameters

12.3.1 Polarity of reflectivity modulation

The reflectivity is high in unrecorded areas and changes to low in the recorded marks.

12.3.2 Recording power sensitivity variation

The variation in optimum recording power over the surface of the disk shall be less than $\pm 0{,}05\ P_o$. See Annex H.

© ISO/IEC 2005 — All rights reserved
Copyright International Organization for Standardization
Reproduced by IHS under license with ISO
No reproduction or networking permitted without license from IHS
Not for Resale

Section 3 - Operational signals

13 Operational signals for recorded disk

13.1 Measurement conditions

The operational signals shall be measured after recording 8/16 modulated data in more than 5 tracks.

The Pick-Up Head (PUH) shall be as specified in 9.1.1.

The measurement conditions shall be as specified in 9.2.1 and 9.2.2.

The HF signal equalizing for jitter measurement shall be as specified in Annex F.

The normalized servo transfer function shall be as specified in 9.3.

The reference servo for axial tracking shall be as specified in 9.4.

The reference servo for radial tracking shall be as specified in 9.5.

13.2 Read conditions

The power of the read spot shall not exceed 1,0 mW (continuous wave).

13.3 Recorded disk high frequency (HF) signals

The HF signal is obtained by summing the currents of the four elements of the quadrant photo detector. These currents are modulated by diffraction and reflectivity changes of the light beam at the recorded marks representing the information on the recorded layer. Recording power conditions are specified in Annex H. All measurements, except jitter are executed on the HF signal before equalizing.

13.3.1 Modulated amplitude

The peak-to-peak value generated by the longest recorded mark and space is I_{14}.

The peak value corresponding to the HF signal before high-pass filtering is I_{14H}.

The peak-to-peak value generated by the shortest recorded mark and space is I_3.

The zero level is the signal level obtained when no disk is inserted.

These parameters shall satisfy the following requirements.

$I_{14} / I_{14H} = 0{,}60$ min.

$I_3 / I_{14} = 0{,}15$ min.

The maximum value of (I_{14H} max. - I_{14H} min.) / I_{14H} max. shall be as specified in Table 2.

See Figure 10.

© ISO/IEC 2005 – All rights reserved
Copyright International Organization for Standardization
Reproduced by IHS under license with ISO
No reproduction or networking permitted without license from IHS
Not for Resale

Table 2 – Maximum value of (I_{14H} max. - I_{14H} min.) / I_{14H} max.

	Over one disk	Over one revolution
PUH with PBS	0,33	0,15
PUH without PBS	0,20	0,10

13.3.2 Signal asymmetry

The value of asymmetry shall satisfy the following requirements when a disk is recorded at the optimum recording power P_o. See Figure 10.

$$-0{,}05 \leq [\ (I_{14H} + I_{14L}\ ) / 2 - (I_{3H} + I_{3L}\ ) / 2\ ] / I_{14} \leq 0{,}15$$

where

$(I_{14H} + I_{14L}) / 2$ is the centre level of I_{14}

$(I_{3H} + I_{3L}) / 2$ is the centre level of I_3 .

13.3.3 Cross-track signal

The cross-track signal is derived from the HF signal when low pass filtered with a cut off frequency of 30 kHz when the light beam crosses the tracks. See Figure 11. The low pass filter is a 1st-order filter.

The cross-track signal shall meet the following requirements.

$I_T = I_H - I_L$

$I_T/I_H = 0{,}10$ min.

where I_H is the peak value of this signal and I_T is the peak-to-peak value.

13.4 Quality of signals

13.4.1 Jitter

Jitter is the standard deviation σ of the time variation of the digitized data passed through the equalizer. The jitter of the leading and the trailing edges is measured relative to the clock of the phase-lock loop and normalized by the Channel bit clock interval.

Jitter shall be less than 8,0 % of the Channel bit clock period, when measured according to Annex F.

13.4.2 Random errors

A row of an ECC Block (see clause 19) that has at least 1 byte in error constitutes a PI error. In any 8 consecutive ECC Blocks the total number of PI errors before correction shall not exceed 280.

13.4.3 Defects

The diameter of local defects shall meet the following requirements

- for air bubbles it shall not exceed 100 µm,
- for black spots causing birefringence it shall not exceed 200 µm,
- for black spots not causing birefringence it shall not exceed 300 µm.

--`,,```,,,,````-`-`,,`,,`,`,,`---
© ISO/IEC 2005 — All rights reserved
Copyright International Organization for Standardization
Reproduced by IHS under license with ISO
No reproduction or networking permitted without license from IHS
Not for Resale

In addition, over a distance of 80 mm in scanning direction of tracks, the following requirements shall be met

- the total length of defects larger than 30 µm shall not exceed 300 µm,
- there shall be at most 6 such defects.

13.5 Servo signals

The output currents of the four quadrants of the quadrant photo detector shown in Figure 12 are identified by I_a, I_b, I_c and I_d.

13.5.1 Differential phase tracking error signal

The differential phase tracking error signal shall be derived from the phase difference between diagonal pairs of detectors elements when the light beam crosses the tracks: Phase (I_a + I_c) - Phase (I_b + I_d) , see Figure 13. The differential phase tracking error signal shall be low-pass filtered with a cut-off frequency of 30 kHz, see Annex C. This signal shall meet the following requirements, see Figure 13.

Amplitude

At the positive 0 crossing $\overline{\Delta t}$ /T shall be in the range 0,5 to 1,1 at 0,10 µm radial offset, where $\overline{\Delta t}$ is the average time difference derived from the phase difference between diagonal pairs of detector elements, and T is the Channel bit clock period.

Asymmetry

The asymmetry shall meet the following requirement, see Figure 13.

$$\frac{|T_1 - T_2|}{|T_1 + T_2|} \leq 0{,}2$$

where

- T_1 is the positive peak value of $\overline{\Delta t}$ / T,
- T_2 is the negative peak value of $\overline{\Delta t}$ / T.

13.5.2 Tangential push-pull signal

This signal shall be derived from the instantaneous level of the differential output (I_a + I_d) - (I_b + I_c). It shall meet the following requirement, see Figure 14.

$$0 \leq \frac{\left[(I_a + I_d) - (I_b + I_c)\right]_{pp}}{I_{14}} \leq 0{,}9$$

© ISO/IEC 2005 – All rights reserved
Copyright International Organization for Standardization
Reproduced by IHS under license with ISO
No reproduction or networking permitted without license from IHS
Not for Resale

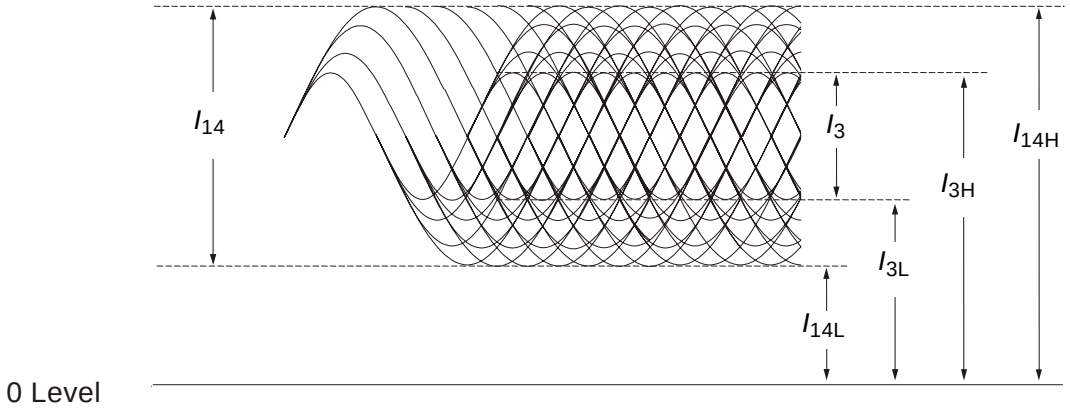

Figure 10 - Modulated amplitude

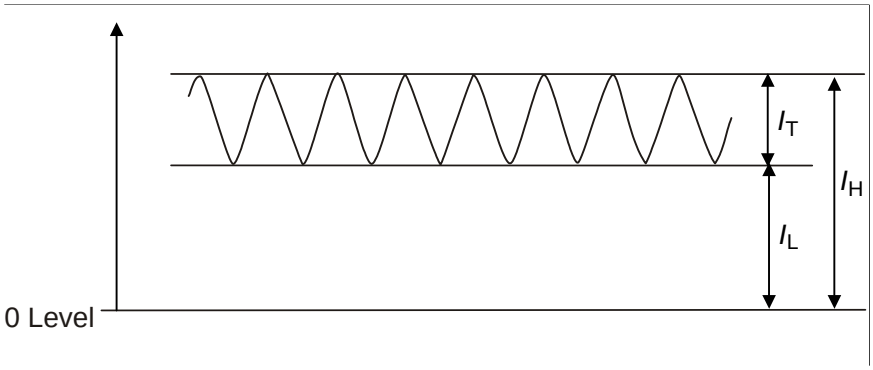

Figure 11 - Cross-track signal

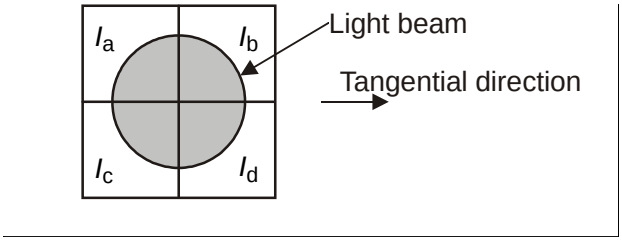

Figure 12 - Quadrant photo detector

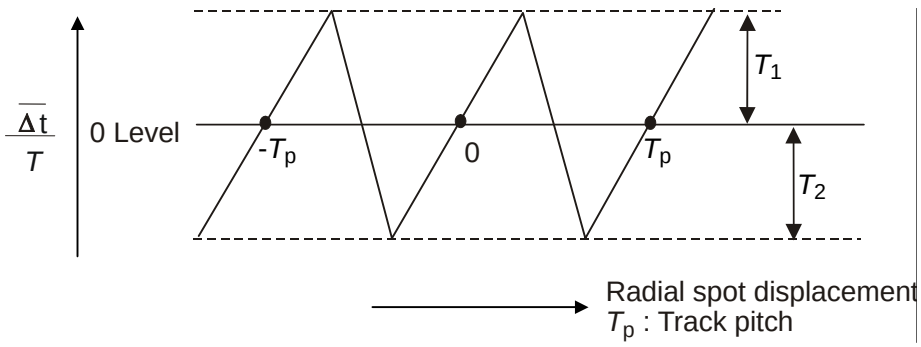

Figure 13 - Differential phase tracking error signal

Copyright International Organization for Standardization
Reproduced by IHS under license with ISO
No reproduction or networking permitted without license from IHS
Not for Resale
© ISO/IEC 2005 — All rights reserved

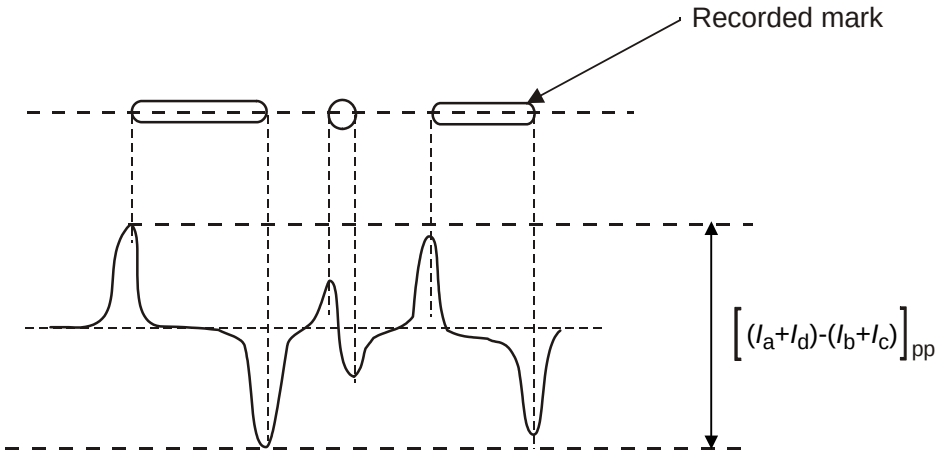

Figure 14 - Tangential push-pull signal

13.6 Groove wobble signal

The output current of each quadrant photo detector element of the PUH are I_a, I_b, I_c and I_d, see Figure 12.

The groove wobble signal is derived from the differential output when the light beam is following a track, and is $[(I_a + I_b) - (I_c + I_d)]$.

The groove wobble signal shall meet the following requirements.

The locking frequency for the groove wobble shall be 8 times the SYNC Frame frequency.

CNR of the groove wobble signal shall be greater than 31 dB (RBW = 1 kHz).

The CNR of the groove wobble signal shall be measured for the average value using a spectrum analyser where the Resolution Bandwidth (RBW) setting is 1 kHz, see Figure 15.

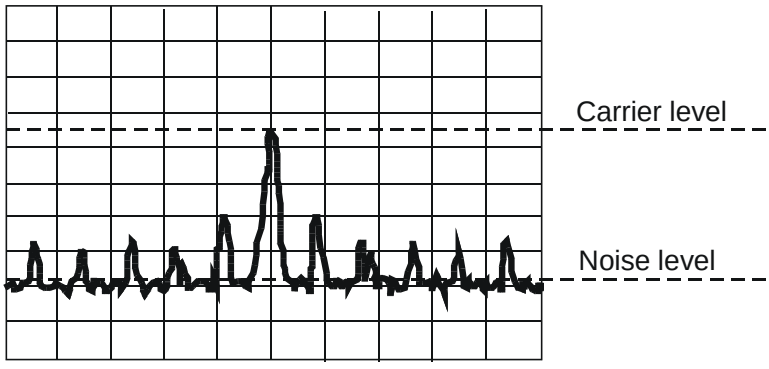

Figure 15 - Measurement of the wobble CNR

© ISO/IEC 2005 – All rights reserved

Copyright International Organization for Standardization
Reproduced by IHS under license with ISO
No reproduction or networking permitted without license from IHS
Not for Resale

14 Operational signals for the unrecorded disk

14.1 Measurement conditions

- The drive optical Pick-Up Head (PUH) for measurement of the unrecorded disk parameters and for making the recordings necessary for disk measurements shall be as specified in 9.1.2.
- The measurement conditions shall be as specified in 9.2.1 and 9.2.3.
- The normalized servo transfer function shall be as specified in 9.3.
- The reference servo for axial tracking shall be as specified in 9.4.
- The reference servo for radial tracking shall be as specified in 9.5.

14.2 Recording conditions

- General recording strategy : In groove
- Optimum recording power : Determined by OPC specified in Annex H
- Optimum recording power range of all disks : $6{,}0\ \text{mW} \leq P_o \leq 12{,}0\ \text{mW}$
- Bias power : $P_b \leq 0{,}7\ \text{mW}$
- Recording power window : $P_o \pm 0{,}25\ \text{mW}$

14.3 Basic write strategy for media testing

During the recordings necessary for disk measurements using the PUH specified in 9.1.2, the laser power shall be modulated according to the basic write strategy, see Figure 16.

Each write pulse of length 4T to 11T and 14T consists of two parts, a top pulse and a multiple-pulse train with T representing the length of one clock period.

The write pulse of length 3T uses the top pulse only.

The top pulse shall start after the leading edge of the recording data and shall end always 3T after this leading edge (with T representing the clock period). The top pulse width (T_{top}) shall be selected according to the recording data length (T_{wd}), as specified below.

The multiple-pulse train shall start 3T after the leading edge of the recording data and shall end at the trailing edge of the recording data. The pulse period of the multi-pulse train shall be T. Its width (T_{mp}) shall be independent of the recording data length.

Three sets of the recommended value of each parameter shall be as specified in Table 3.

Table 3 – Parameters for Basic Write Strategy

	T_{top}			T_{mp}
	T_{wd} = 3T	T_{wd} = 4T	$T_{wd} \geq$ 5T	
Type 1	1,55T	1,50T	1,55T	0,65T
Type 2	1,50T	1,50T	1,55T	0,65T
Type 3	1,25T	1,15T	1,15T	0,60T

© ISO/IEC 2005 — All rights reserved
Copyright International Organization for Standardization
Reproduced by IHS under license with ISO
No reproduction or networking permitted without license from IHS
Not for Resale

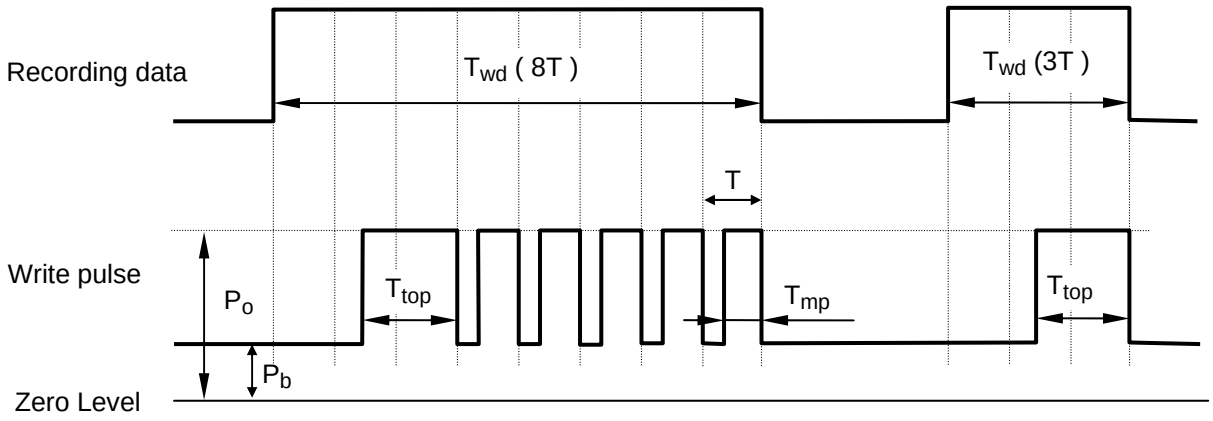

Figure 16 - Basic write strategy

See Annex N for options in write strategy.

14.3.1 Definition of the write pulse

The write pulse from the objective lens shall be as shown in Figure 17.

The rise times (T_r) and fall times (T_f) shall not exceed 3 ns.

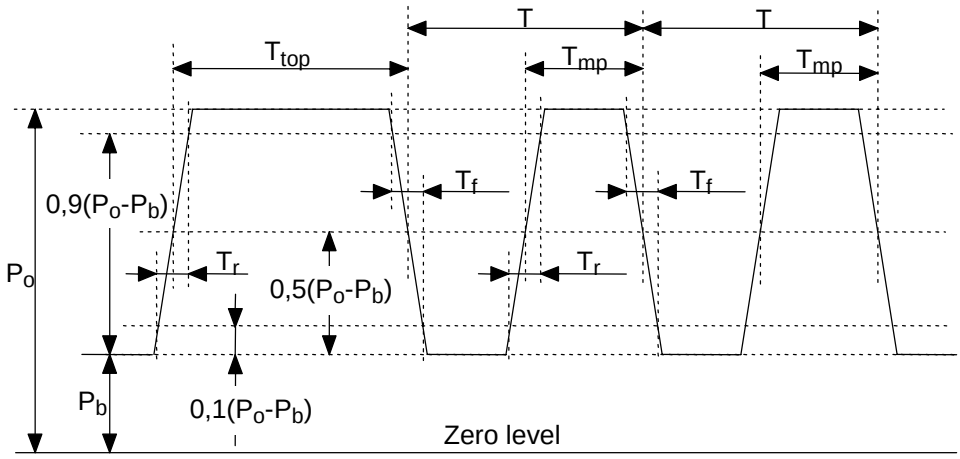

Figure 17 - Write pulse

14.4 Servo signals

The output currents of the four quadrants of the quadrant photo detector are I_a, I_b, I_c, and I_d, see Figure 18. The photo detector elements (I_a and I_b) are located at a greater radius than elements (I_c and I_d).

--`,,```,,,,````-`-`,,`,,`,`,,`---

© ISO/IEC 2005 – All rights reserved
Copyright International Organization for Standardization
Reproduced by IHS under license with ISO
No reproduction or networking permitted without license from IHS
Not for Resale

14.4.1 Radial push-pull tracking error signal

The radial push-pull tracking error signal is derived from the differential output of the detector elements when the light beam crosses the tracks and shall be $[(I_a + I_b) - (I_c + I_d)]$. The radial push-pull tracking error signal shall be measured with the PUH specified in 9.1.2 before and after recording and is low pass filtered with a cut-off frequency 30 kHz.

The radial push-pull amplitude before recording (PPb) and after recording (PPa) shown in Figure 18 are defined as:

PPb, PPa = $|(I_a + I_b) - (I_c + I_d)|_{a.c.} / |(I_a + I_b + I_c + I_d)|_{d.c.}$

$|(I_a + I_b + I_c + I_d)|_{d.c}$ shall be measured from zero level to the average level of $|(I_a + I_b + I_c + I_d)|_{a.c}$ (see Figure 19).

The radial push-pull ratio (PPr) is defined as:

PPr = PPb / PPa.

The above parameters shall meet the following requirements.

- PPb signal amplitude : $0{,}22 < PPb < 0{,}44$
- Push Pull ratio : $0{,}5 < PPr < 1{,}0$
- Variation in PPb signal : $\Delta PPb < 15\ \%$

where ΔPPb = [(PPb) max. - (PPb) min.] / [(PPb) max. + (PPb) min.]

- ΔPPb shall be measured over the entire disk surface (from 22,0 to 38,5 mm for 80mm disk and to 58,5 mm for 120mm disk).

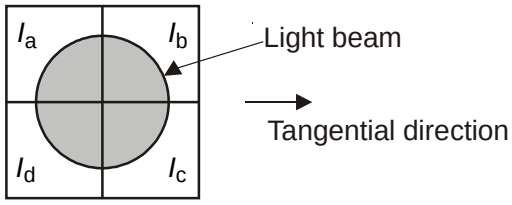

Figure 18 - Quadrant photo detector

© ISO/IEC 2005 — All rights reserved
Copyright International Organization for Standardization
Reproduced by IHS under license with ISO
No reproduction or networking permitted without license from IHS
Not for Resale

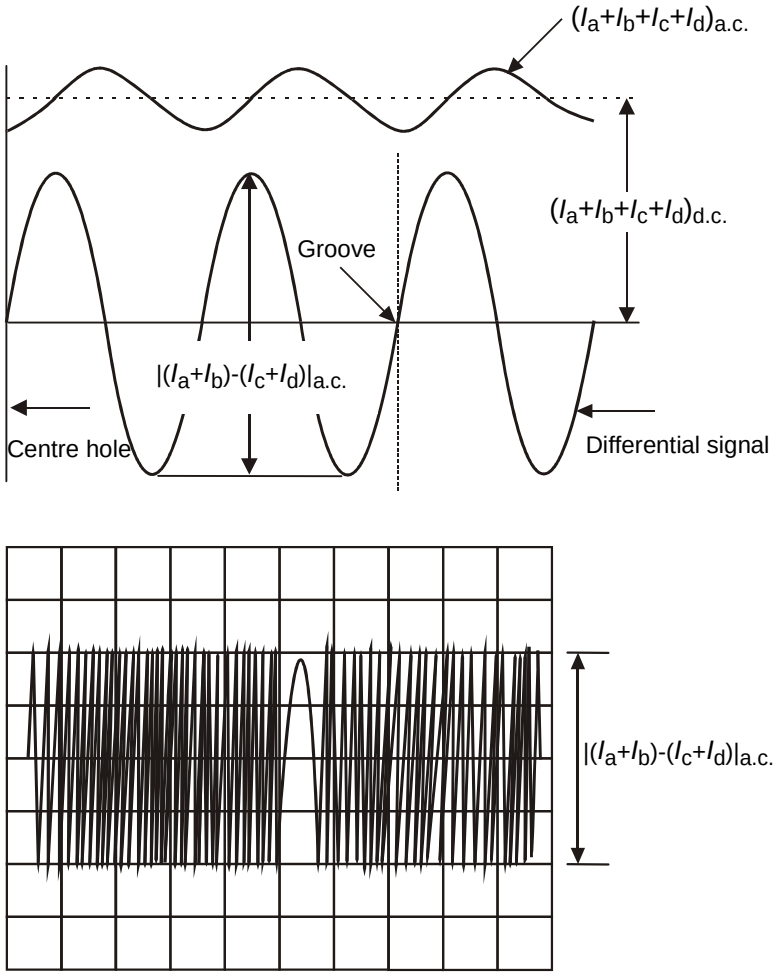

Figure 19 - Radial push-pull tracking error signal

14.4.2 Defects

The requirements shall be as specified in 13.4.3.

14.5 Addressing signals

The output currents of the four quadrants of the split photo detector are I_a, I_b, I_c and I_d as shown in Figure 18.

14.5.1 Land Pre-Pit signal

The Land Pre-Pit signal is derived from the instantaneous level of the differential output when the light beam is following a track and shall be $[(I_a + I_b) - (I_c + I_d)]$. This differential signal shall be measured by the PUH specified in 9.1.2 before and after recording.

The Land Pre-Pit signal amplitude before recording (LPPb) shall be defined as:

$$LPPb = \left|(I_a + I_b) - (I_c + I_d)\right|_{o\text{-}p} / \left|(I_a + I_b + I_c + I_d)\right|_{d.c}.$$

See Figure 19 and 20.

$\left|(I_a + I_b) - (I_c + I_d)\right|_{o\text{-}p}$ shall be measured at the average point of maximum and minimum signals and the bandwidth of the photo-detector amplifiers shall be higher than 20 MHz.

--`,,```,,,,````-`-`,,`,,`,`,,`---

© ISO/IEC 2005 – All rights reserved
Copyright International Organization for Standardization
Reproduced by IHS under license with ISO
No reproduction or networking permitted without license from IHS
Not for Resale

$|(I_a + I_b + I_c + I_d)|_{d.c.}$ shall be measured when the light beam is following a track and shall be low pass filtered with a cut-off frequency of 30 kHz.

The aperture ratio of the Land Pre-Pit after recording (AR) shall be defined as:

AR=APmin. / APmax.

APmin. and APmax. are the minimum and the maximum values of the Land Pre-Pit signal amplitude $AP = |(I_a + I_b) - (I_c + I_d)|$ without the wobble amplitude.

See Figure 20 and Annex P.

The above parameters shall meet the following requirements.

- Signal amplitude before recording : 0,18 < LPPb < 0,28
- Aperture ratio after recording : AR > 15 %
- Block error ratio before recording : BLERb < 3 %
- Block error ratio after recording : BLERa < 5 %

The Half Maximum Full Width of LPPb signal shall be larger than 1T.

The Land Pre-Pit on the outer side of the track shall be detected when the laser beam is following the track.

For the measurement of the Block error ratio of the Land Pre-Pit data, the parity A errors before error correction shall be measured over 1000 ECC Blocks.

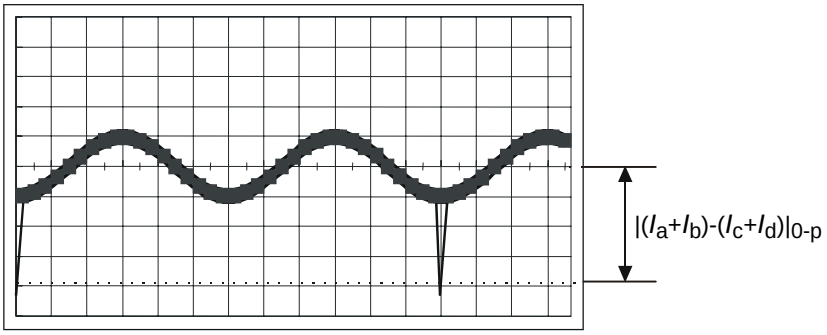

(a) Before recording for measuring LPPb

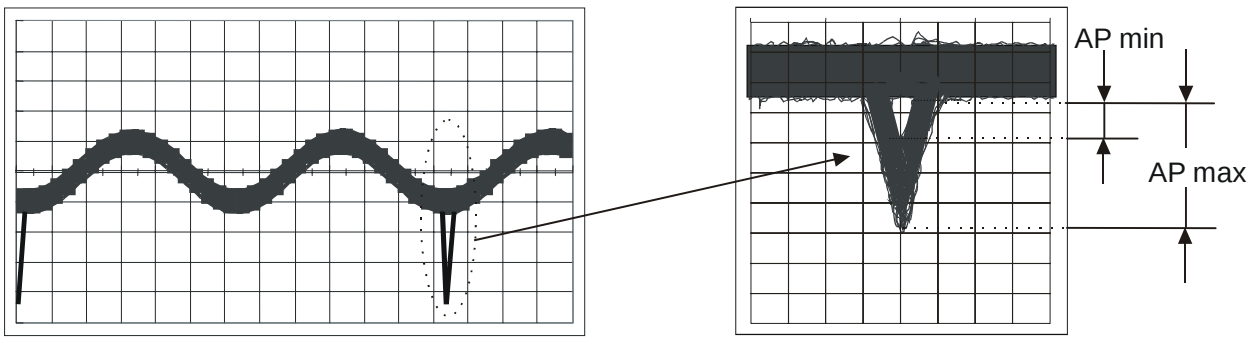

(b) After recording for measuring AR

Figure 20 - Land Pre-Pit signal

Copyright International Organization for Standardization
Reproduced by IHS under license with ISO
No reproduction or networking permitted without license from IHS
Not for Resale
© ISO/IEC 2005 — All rights reserved

14.5.2 Groove wobble signal

The groove wobble signal is derived from the differential output when the light beam is following a track, and is $[(I_a + I_b) - (I_c + I_d)]$. The groove wobble signal shall be measured by the PUH specified in 9.1.2 before and after recording.

The groove wobble signal amplitudes before recording (WOb) and after recording (WOa) are defined as:

WOb, WOa = $[(I_a + I_b) - (I_c + I_d)]_{p\text{-}p}$

The above parameters shall meet the following requirements.

The locking frequency for the groove wobble shall be 8 times the SYNC Frame frequency.

See clause 21.

CNR of WOb shall be greater than 35 dB (RBW = 1 kHz)

CNR of WOa shall be greater than 31 dB (RBW = 1 kHz)

The CNR of WOb and WOa shall be measured for the average value using a spectrum analyser where the Resolution Bandwidth (RBW) setting is 1 kHz, see Figure 21.

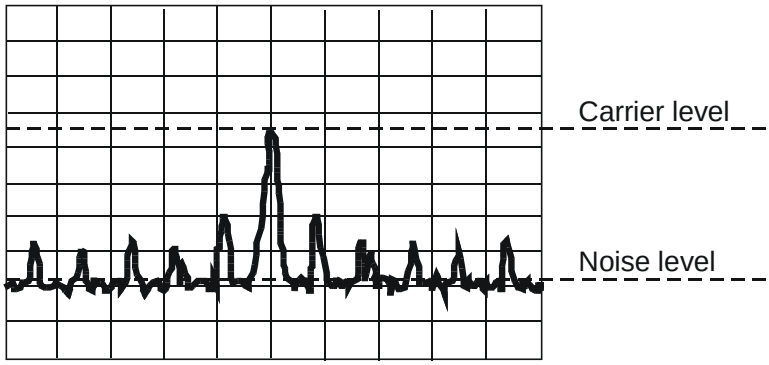

Figure 21 - Measurement of the wobble CNR

The normalized Wobble signal (NWO) is defined to derive the wobble amplitude in nanometres.

NWO = WOb / RPS and its value shall be 0,06 < NWO < 0,12 where RPS is the peak to peak value of the radial push-pull signal $[(I_a + I_b) - (I_c + I_d)]$ before recording, when the light spot crosses the tracks and is low pass filtered with a cut-off frequency 30 kHz.

14.5.3 Relation in phase between wobble and Land Pre-Pit

The groove wobble signal and Land Pre-Pit signal are derived from the differential output currents $[(I_a + I_b) - (I_c + I_d)]$. Therefore, when the photo detector elements (I_a, I_b) are located at the outer side of the disk and groove wobble is regarded as a sine wave, the relation in phase between groove wobble and Land Pre-Pit (PWP) shall meet the following requirement.

PWP = -90° ± 10°

The PWP value shall be measured as the phase difference between the largest amplitude point of the LPP signal and the averaged zero crossing point of the wobble, see Figure 22.

The PWP value shall be measured before recording.

© ISO/IEC 2005 – All rights reserved
Copyright International Organization for Standardization
Reproduced by IHS under license with ISO
No reproduction or networking permitted without license from IHS
Not for Resale

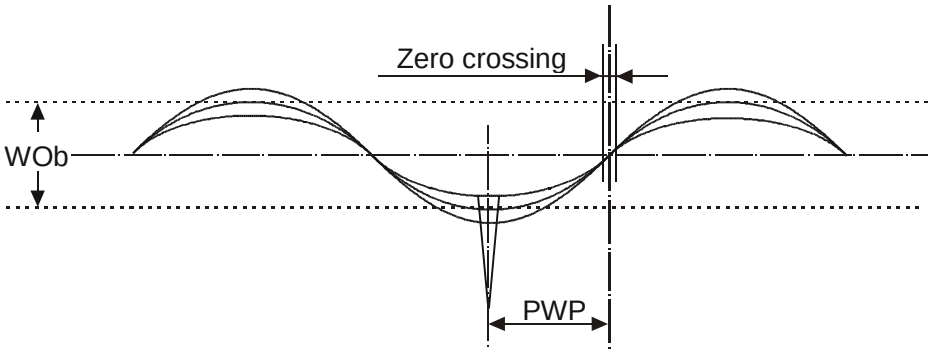

Figure 22 - Relation in phase between wobble and Land Pre-Pit

© ISO/IEC 2005 — All rights reserved
Copyright International Organization for Standardization
Reproduced by IHS under license with ISO
No reproduction or networking permitted without license from IHS
Not for Resale

Section 4 - Data format

15 General

The data received from the host, called Main Data, is formatted in a number of steps before being recorded on the disk. It is transformed successively into

- a Data Frame,
- a Scrambled Frame,
- an ECC Block,
- a Recording Frame,
- a Physical Sector.

These steps are specified in the following clauses.

16 Data Frames

A Data Frame shall consist of 2 064 bytes arranged in an array of 12 rows each containing 172 bytes, see Figure 23. The first row shall start with three fields, called Identification Data (ID), the check bytes of ID Error Detection Code (IED), and RSV, followed by 160 Main Data bytes. The next 10 rows shall each contain 172 Main Data bytes and the last row shall contain 168 Main Data bytes followed by four check bytes of Error Detection Code (EDC). The 2 048 Main Data bytes are identified as D_0 to $D_{2\,047}$.

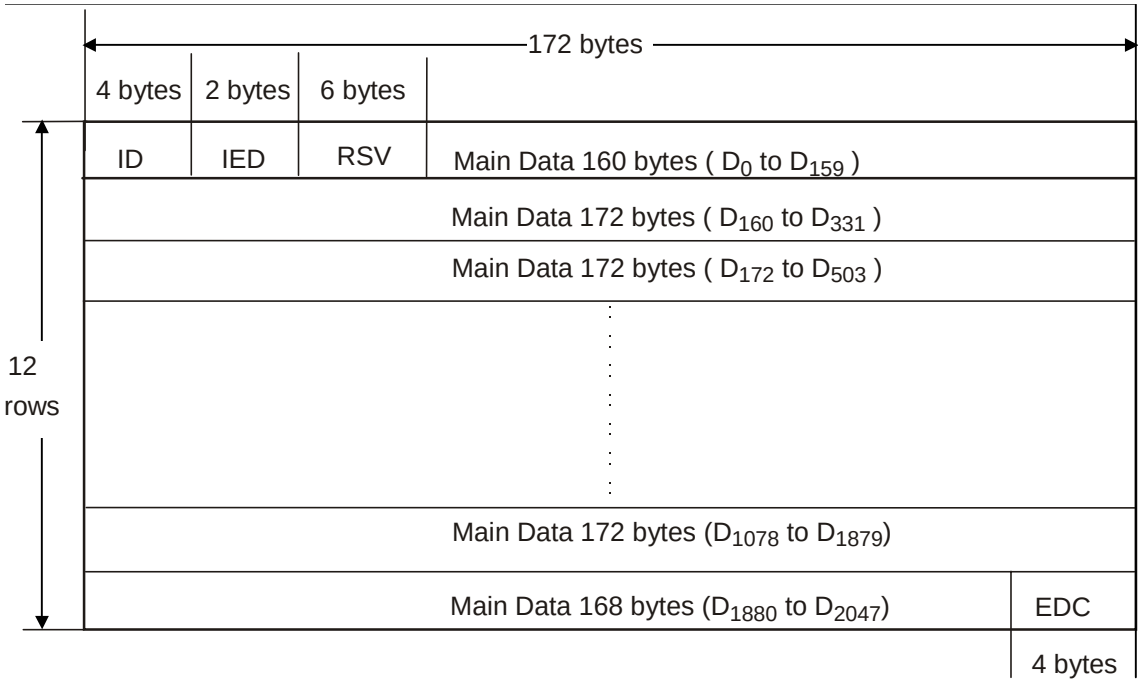

Figure 23 - Data Frame

--`,,```,,,,````-`-`,,`,,`,`,,`---
© ISO/IEC 2005 – All rights reserved
Copyright International Organization for Standardization
Reproduced by IHS under license with ISO
No reproduction or networking permitted without license from IHS
Not for Resale

16.1 Identification Data (ID)

This field shall consist of four bytes. Within these bytes the bits shall be numbered consecutively from b_0 (lsb) to b_{31} (msb), see Figure 24.

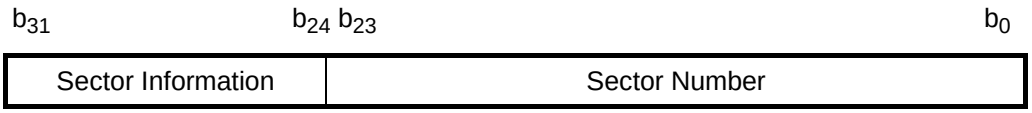

Figure 24 - Identification Data (ID)

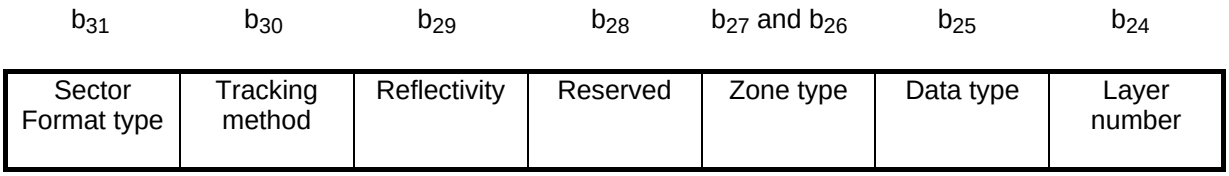

Figure 25 - Sector Information of the Identification Data (ID)

The least significant three bytes, bits b_0 to b_{23}, shall specify the sector number in binary notation. The sector number of the first sector of an ECC Block of 16 sectors shall be a multiple of 16.

The bits of the most significant byte shown in Figure 25, the Sector Information, shall be set as follows.

a) Sector format type — bit b_{31} — shall be set to ZERO, indicating the CLV format type specified for Read-only disk and Recordable disk.

b) Tracking method — bit b_{30} — shall be set to ZERO, indicating Differential Phase tracking.

c) Reflectivity — bit b_{29} — shall be set to ZERO, indicating the reflectivity is greater than 40%, measured with PBS PUH.

d) Reserved — bit b_{28} — shall be set to ZERO.

e) Zone type — bit b_{27} and bit b_{26} — shall be set to ZERO ZERO in the Data Zone.
shall be set to ZERO ONE in the Lead-in Zone.
shall be set to ONE ZERO in the Lead-out Zone.

f) Data type — bit b_{25} — shall be set to ZERO, indicating Read-Only data
shall be set to ONE, indicating Linking data (see clause 23).

g) Layer number — bit b_{24} — shall be set to ZERO, indicating that through an entrance surface only one recording layer can be accessed.

Other settings are prohibited by this International Standard.

Copyright International Organization for Standardization
Reproduced by IHS under license with ISO
No reproduction or networking permitted without license from IHS
Not for Resale
© ISO/IEC 2005 — All rights reserved

16.2 ID Error Detection Code

When identifying all bytes of the array shown in Figure 23 as $C_{i,j}$ for i = 0 to 11 and j = 0 to 171, the check bytes for ID Error Detection code (IED) are represented by $C_{0,j}$ for j = 4 to 5. Their setting shall be obtained as follows.

$$\mathrm{IED}(x) = \sum_{j=4}^{5} C_{0,j}\, x^{5-j} = \mathrm{I}(x)\, x^2 \bmod G_E(x)$$

where

$$\mathrm{I}(x) = \sum_{j=0}^{3} C_{0,,\mathrm{j}}\, x^{3-j}$$

$$G_E(x) = \prod_{k=0}^{1} (x + \alpha^k)$$

α represents the primitive root of the primitive polynomial

$$P(x) = x^8 + x^4 + x^3 + x^2 + 1$$

16.3 RSV

This field shall consist of 6 bytes. Their setting is application dependent, for instance a video application. If this setting is not specified by the application, the default setting shall be all ZEROs.

16.4 Error Detection Code

This field shall contain four check bytes of Error Detection Code (EDC) computed over the preceding 2 060 bytes of the Data Frame. Considering the Data Frame as a single bit field starting with the most significant bit of the first byte of the ID field and ending with the least significant bit of the EDC field, then this msb will be $b_{16\,511}$ and the lsb will be b_0. Each bit b_i of the EDC shall be as follows for i = 31 to 0

$$\mathrm{EDC}(x) = \sum_{i=31}^{0} b_i\, x^i = \mathrm{I}(x) \bmod G(x)$$

where:

$$\mathrm{I}(x) = \sum_{i=16\,511}^{32} b_\mathrm{i}\, x^i$$

$$G(x) = x^{32} + x^{31} + x^4 + 1$$

17 Scrambled Frames

The 2 048 Main Data bytes shall be scrambled by means of the circuit shown in Figure 26 which shall consist of a feedback bit shift register in which bits r_7 (msb) to r_0 (lsb) represent a scrambling byte at each 8-bit shift. At the beginning of the scrambling procedure of a Data Frame, positions r_{14} to r_0 shall be pre-set to the value(s) specified in Table 3. The same pre-set value shall be used for 16 consecutive Data Frames. After 16 groups of 16 Data Frames, the sequence is repeated. The initial pre-set number is equal to the value

--`,,```,,,,````-`-`,,`,,`,`,,`---

© ISO/IEC 2005 – All rights reserved

Copyright International Organization for Standardization
Reproduced by IHS under license with ISO
No reproduction or networking permitted without license from IHS
Not for Resale

represented by bits b_7 (msb) to bit b_4 (lsb) of the ID field of the Data Frame. Table 4 specifies the initial pre-set value of the shift register corresponding to the 16 initial pre-set numbers.

Table 4 – Initial value of shift register

Initial pre-set number	Initial value	Initial pre-set number	Initial value
(0)	(0001)	(8)	(0010)
(1)	(5500)	(9)	(5000)
(2)	(0002)	(A)	(0020)
(3)	(2A00)	(B)	(2001)
(4)	(0004)	(C)	(0040)
(5)	(5400)	(D)	(4002)
(6)	(0008)	(E)	(0080)
(7)	(2800)	(F)	(0005)

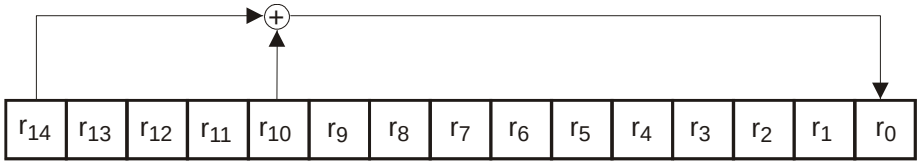

Figure 26 - Feedback shift register for generating scramble data

The part of the initial value of r_7 to r_0 is taken out as scrambling byte S_0. After that, 8-bit shift is repeated 2 047 times and the following 2 047 bytes shall be taken from r_7 to r_0 as scrambling bytes S_1 to S_{2047}. The Main Data bytes D_k of the Data Frame become scrambled bytes D'_k where

$D'_k = D_k \oplus S_k$ for k = 0 to 2 047

$\oplus$ stands for Exclusive OR.

18 ECC Block configuration

An ECC Block is formed by arranging 16 consecutive Scrambled Frames in an array of 192 rows of 172 bytes each, see Figure 27. To each of the 172 columns, 16 bytes of Parity of Outer Code are added, then, to each of the resulting 208 rows, 10 byte of Parity of Inner Code are added. Thus a complete ECC Block comprises 208 rows of 182 bytes each. The bytes of this array are identified as $B_{i,j}$ as follows, where i is the row number and j the column number.

$B_{i,j}$ for i = 0 to 191 and j = 0 to 171 are bytes from the Scrambled Frames

$B_{i,j}$ for i = 192 to 207 and j = 0 to 171 are bytes of the Parity of Outer Code

$B_{i,j}$ for i = 0 to 207 and j = 172 to 181 are bytes of the Parity of Inner Code

© ISO/IEC 2005 — All rights reserved
Copyright International Organization for Standardization
Reproduced by IHS under license with ISO
No reproduction or networking permitted without license from IHS
Not for Resale

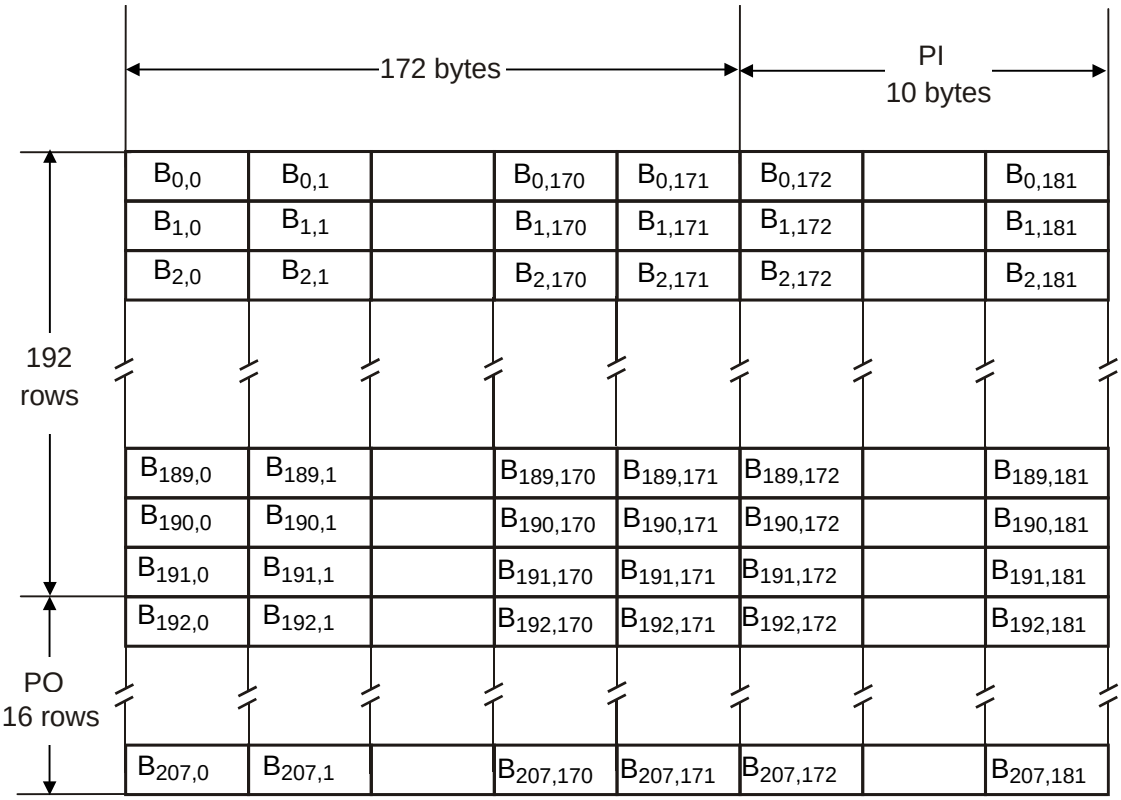

Figure 27 - ECC Block

The PO and PI bytes shall be obtained as follows.

In each of columns j = 0 t§o 171, the 16 PO bytes are defined by the remainder polynomial $R_j(x)$ to form the outer code RS (208,192,17).

$$R_j(x) = \sum_{i=192}^{207} B_{i,,j}\, x^{207-i} = I_j(x)\, x^{16} \bmod G_{PO}(x)$$

where:

$$I_j(x) = \sum_{i=0}^{191} B_{i,,j}\, x^{191-i}$$

$$G_{PO}(x) = \prod_{k=0}^{15} (x + \alpha^k)$$

In each of rows i = 0 to 207, the 10 PI bytes are defined by the remainder polynomial $R_i(x)$ to form the inner code RS (182,172,11).

$$R_i(x) = \sum_{j=172}^{181} B_{i,,j}\, x^{181-j} = I_i(x)\, x^{10} \bmod G_{PI}(x)$$

where:

Copyright International Organization for Standardization All rights reserved
Reproduced by IHS under license with ISO
No reproduction or networking permitted without license from IHS
Not for Resale

$$I_i(x) = \sum_{j=0}^{171} B_{i,j}\, x^{171-j}$$

$$G_{PI}(x) = \prod_{k=0}^{9} (x + \alpha^k)$$

α is the primitive root of the primitive polynomial $P(x) = x^8 + x^4 + x^3 + x^2 + 1$.

19 Recording Frames

Sixteen Recording Frames shall be obtained by interleaving one of the 16 PO rows at a time after every 12 rows of an ECC Block, see Figure 28. This is achieved by re-locating the bytes $B_{i,j}$ of the ECC Block as $B_{m,n}$ for

m = i + int [i / 12] and n = j for $i \leq 191$

m = 13 (i - 191) - 1 and n = j for i ≥ 192

where int [x] represents the largest integer not greater than x.

Thus the 37 856 bytes of an ECC Block are re-arranged into 16 Recording Frames of 2 366 bytes. Each Recording Frame consists of an array of 13 rows of 182 bytes.

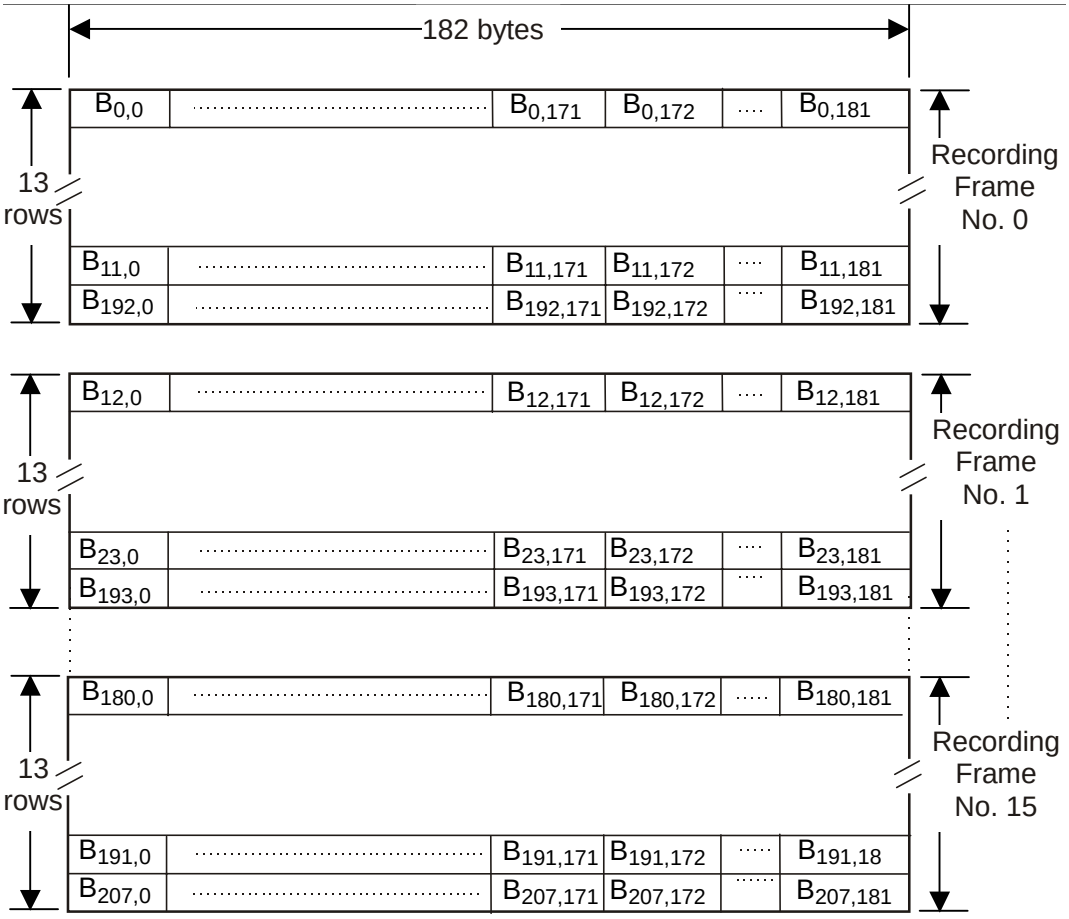

Figure 28 - Recording Frames obtained from an ECC Block

© ISO/IEC 2005 — All rights reserved
Copyright International Organization for Standardization
Reproduced by IHS under license with ISO
No reproduction or networking permitted without license from IHS
Not for Resale

20 Modulation

The 8-bit bytes of each Recording Frame shall be transformed into 16-bit Code Words with the run length limitation that between 2 ONEs there shall be at least 2 ZEROs and at most 10 ZEROs (RLL 2,10). Annex G specifies the conversion Tables to be applied. The Main Conversion Table and the Substitution Table specify a 16-bit Code Word for each 8-bit bytes with one of 4 States. For each 8-bit byte, the Tables indicate the corresponding Code Word, as well as the State for the next 8-bit byte to be encoded.

The 16-bit Code Words shall be NRZI-converted into Channel bits before recording on the disk, see Figure 29.

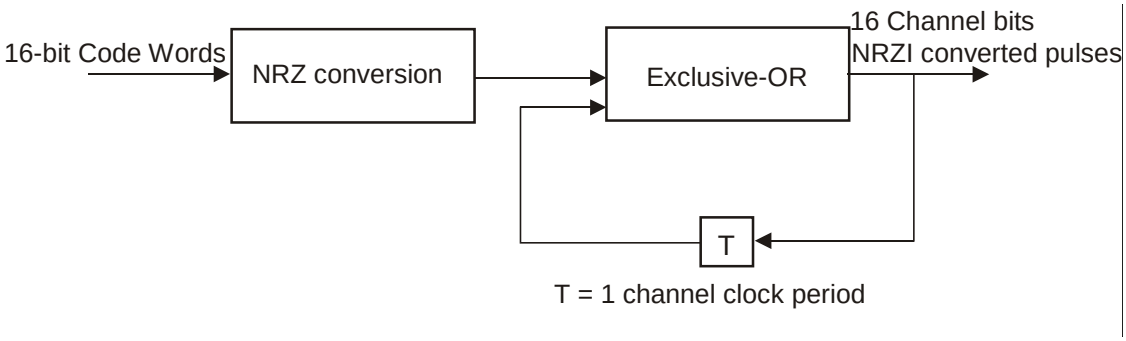

Figure 29 - NRZI conversion

21 Physical Sectors

The structure of a Physical Sector is shown in Figure 30. It shall consist of 13 rows, each comprising two Sync Frames. A Sync Frame shall consist of a SYNC Code from Table 4 and 1 456 Channel bits representing the first, respectively the second 91 8-bit bytes of a row of a Recording Frame. The first row of the Recording Frame is represented by the first row of the Physical Sector, the second by the second, and so on.

© ISO/IEC 2005 – All rights reserved
Copyright International Organization for Standardization
Reproduced by IHS under license with ISO
No reproduction or networking permitted without license from IHS
Not for Resale

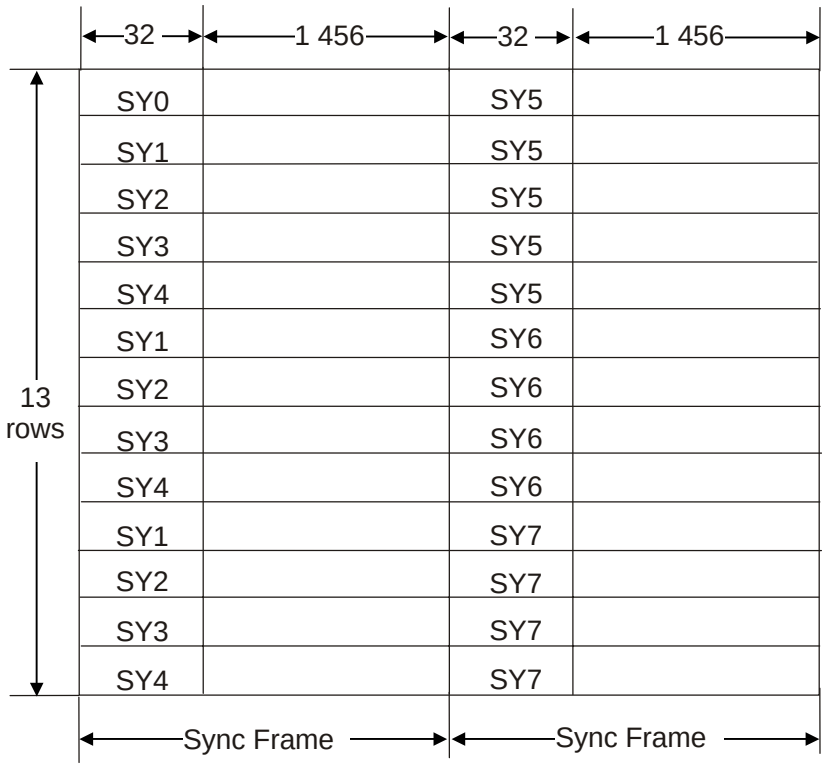

Figure 30 - Physical Sector

Recording shall start with the first Sync Frame of the first row, followed by the second Sync Frame of that row, and so on row-by-row.

Copyright International Organization for Standardization
Reproduced by IHS under license with ISO
No reproduction or networking permitted without license from IHS
Not for Resale
© ISO/IEC 2005 — All rights reserved

Table 5 – SYNC Codes

State 1 and State 2					
	Primary SYNC Codes			Secondary SYNC Codes	
	(msb)	(lsb)	(msb)		(lsb)
SY0 =	0001001001000100	0000000000010001 /	0001001000000100	0000000000010001	
SY1 =	0000010000000100	0000000000010001 /	0000010001000100	0000000000010001	
SY2 =	0001000000000100	0000000000010001 /	0001000001000100	0000000000010001	
SY3 =	0000100000000100	0000000000010001 /	0000100001000100	0000000000010001	
SY4 =	0010000000000100	0000000000010001 /	0010000001000100	0000000000010001	
SY5 =	0010001001000100	0000000000010001 /	0010001000000100	0000000000010001	
SY6 =	0010010010000100	0000000000010001 /	0010000010000100	0000000000010001	
SY7 =	0010010001000100	0000000000010001 /	0010010000000100	0000000000010001	

State 3 and State 4					
	Primary SYNC Codes			Secondary SYNC Codes	
	(msb)	(lsb)	(msb)		(lsb)
SY0 =	1001001000000100	0000000000010001 /	1001001001000100	0000000000010001	
SY1 =	1000010001000100	0000000000010001 /	1000010000000100	0000000000010001	
SY2 =	1001000001000100	0000000000010001 /	1001000000000100	0000000000010001	
SY3 =	1000001001000100	0000000000010001 /	1000001000000100	0000000000010001	
SY4 =	1000100001000100	0000000000010001 /	1000100000000100	0000000000010001	
SY5 =	1000100100000100	0000000000010001 /	1000000100000100	0000000000010001	
SY6 =	1001000010000100	0000000000010001 /	1000000001000100	0000000000010001	
SY7 =	1000100010000100	0000000000010001 /	1000000010000100	0000000000010001	

The Physical Sector is a sector after the modulation by 8/16 conversion which adds a SYNC Code to the head of every 91 bytes in the Recording Frame.

22 Suppress control of the d.c. component

To ensure a reliable radial tracking and a reliable detection of the HF signals, the low frequency content of the stream of Channel bit patterns should be kept as low as possible. In order to achieve this, the Digital Sum Value (DSV, see 4.7) shall be kept as low as possible. At the beginning of the modulation, the DSV shall be set to 0.

--`,,```,,,,````-`-`,,`,,`,`,,`---
© ISO/IEC 2005 – All rights reserved
Copyright International Organization for Standardization
Reproduced by IHS under license with ISO
No reproduction or networking permitted without license from IHS
Not for Resale

The different ways of diminishing the current value of the DSV are as follows.

a) Choice of SYNC Codes between Primary or Secondary SYNC Codes.

b) For the 8-bit bytes in the range 0 to 87, the Substitution Table offers an alternative 16-bit Code Word for all States.

c) For the 8-bit bytes in the range 88 to 255, when the prescribed State is 1 or 4, then the 16-bit Code Word can be chosen either from State 1 or from State 4, so as to ensure that the RLL requirement is met.

In order to use these possibilities, two data streams, Stream 1 and Stream 2, are generated for each Sync Frame. Stream 1 shall start with the Primary SYNC Code and Stream 2 with the

Secondary SYNC Code of the same category of SYNC Codes. As both streams are modulated individually, they generate a different DSV because of the difference between the bit patterns of the Primary and Secondary SYNC Codes.

In the cases b) and c), there are two possibilities to represent an 8-bit byte. The DSV of each stream is computed up to the 8-bit byte preceding the 8-bit byte for which there is this choice. The stream with the lowest $|DSV|$ is selected and duplicated to the other stream. Then, one of the representations of the next 8-bit byte is entered into Stream 1 and the other into Stream 2. This operation is repeated each time case b) or c) occurs.

Whilst case b) always occurs at the same pattern position in both streams, case c) may occur in one of the streams and not in the other because, for instance, the next State prescribed by the previous 8-bit byte can be 2 or 3 instead of 1 or 4. In that case the following 3-step procedure shall be applied.

1) Compare the $|DSV|$s of both streams.

2) If the $|DSV|$ of the stream in which case c) occurs is smaller than that of the other stream, then the stream in which case c) has occurred is chosen and duplicated to the other stream. One of the representations of the next 8-bit byte is entered into this stream and the other into the other stream.

3) If the $|DSV|$ of the stream in which case c) has occurred is larger than that of the other stream, then case c) is ignored and the 8-bit byte is represented according to the prescribed State.

In both cases b) and c), if the $|DSV|$s are equal, the decision to choose Stream 1 or Stream 2 is implementation-defined.

The procedure for case a) shall be as follows. At the end of a Sync Frame, whether or not case b) and or case c) have occurred, the DSV of the whole Sync Frame is computed and the stream with the lower $|DSV|$ is selected. If this DSV is greater than + 63 or smaller than -64, then the SYNC Code at the beginning of the Sync Frame changed from Primary to Secondary or vice versa. If this yields a smaller $|DSV|$, the change is permanent, if the $|DSV|$ is not smaller, the original SYNC Code is retained. During the DSV computation, the actual values of the DSV may vary between -1 000 and +1 000, thus it is recommended that the count range for the DSV be at least from -1 024 to +1 023.

23 Linking scheme

The linking scheme is specified for appending data in the Incremental recording mode. It consists of three types of linking methods named 2K-Link, 32K-Link and Lossless-Link.

23.1 Structure of linking

The appended data shall be recorded from or to the Linking sector, which is the first Physical Sector of the ECC Block and it contains the linking point.

© ISO/IEC 2005 — All rights reserved
Copyright International Organization for Standardization
Reproduced by IHS under license with ISO
No reproduction or networking permitted without license from IHS
Not for Resale

On each linking operation, the data recording shall be terminated at the 16th byte in the first Sync Frame of the Linking sector and shall be started at the 15th to 17th byte in the first Sync Frame of Linking sector. When a disk is in the case of Figure 31 (b), Block SYNC Guard Area shall be located in the first ECC Block before linking and becomes a part of the Linking Loss Area after linking.

23.2 2K-Link and 32K-Link

A Linking Loss Area shall be allocated in cases of 2K-Link and 32K-Link to prevent any degradation of the data reliability due to the influence of linking. It may contain padding sectors as shown in Figures 32 (2K-Link) and 33 (32K-Link) and shall have a minimum size of 2 048 bytes and 32 768 bytes respectively. All Main data in the Linking Loss Area shall be set to (00).

The Data type bit (see 16.1) of the sector followed by a sector belonging to the Linking Loss Area shall be set to ONE, but the Data type bit of the Linking sector is always set to ZERO. See Figures 32 and 33.

The last recorded sector in each RZone shall be recorded by using 2K-Link or 32K-Link and its Data type bit shall be set to ONE.

23.3 Lossless-Link

The linking without Linking Loss Area, as shown in Figure 34, is allowed and referred to as Lossless-Link. There is no sector which has the Data type bit of ONE in this linking scheme.

© ISO/IEC 2005 – All rights reserved

Copyright International Organization for Standardization
Reproduced by IHS under license with ISO
No reproduction or networking permitted without license from IHS
Not for Resale

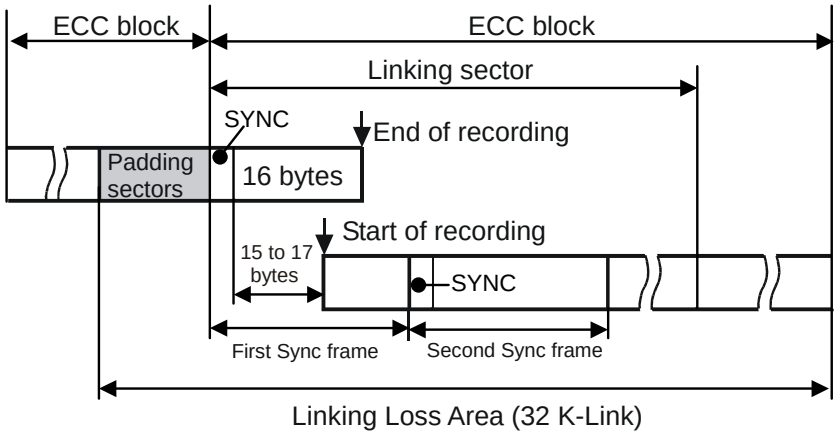

(a) Linking at just after the Recorded Area

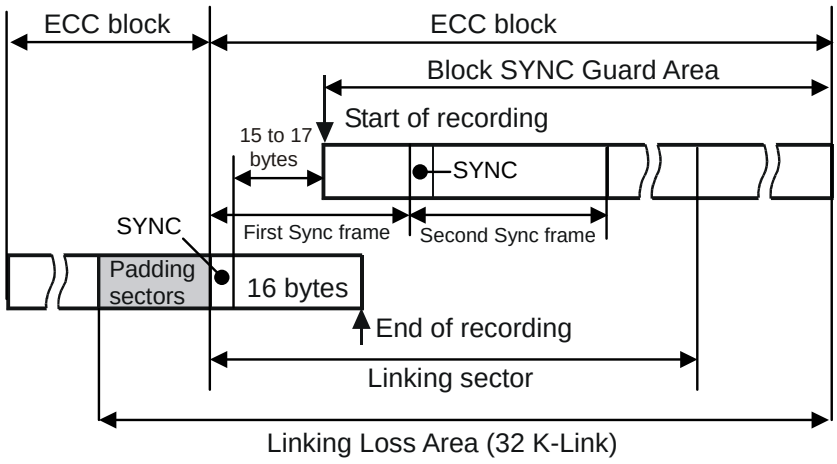

(b) Linking at just before the Recorded Area

Figure 31 - Structure of Linking

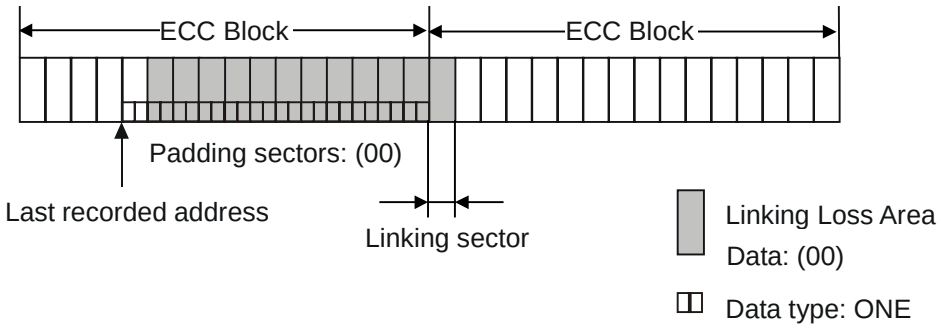

Figure 32 - Structure of ECC Block with Linking Loss Area of 2 048 bytes (2K-Link)

© ISO/IEC 2005 — All rights reserved
Copyright International Organization for Standardization
Reproduced by IHS under license with ISO
No reproduction or networking permitted without license from IHS
Not for Resale

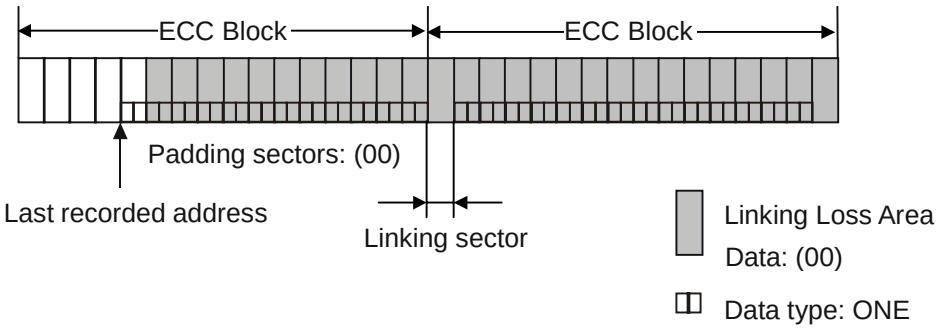

Figure 33 - Structure of ECC Block with Linking Loss Area of 32 768 bytes (32K-Link)

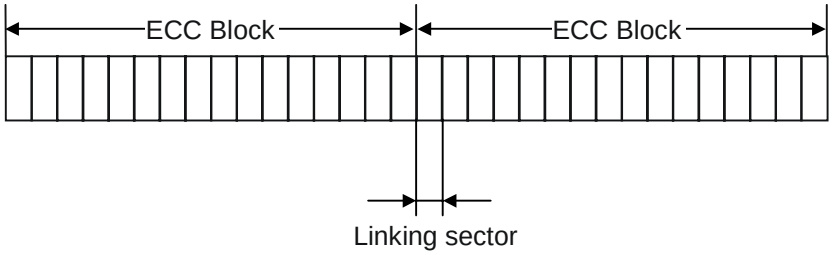

Figure 34 - Structure of ECC Block without Linking Loss Area (Lossless-Link)

© ISO/IEC 2005 – All rights reserved
Copyright International Organization for Standardization
Reproduced by IHS under license with ISO
No reproduction or networking permitted without license from IHS
Not for Resale

Section 5 - Format of the Information Zone

24 General description of the Information Zone

The Information Zone shall be divided in three parts: the Lead-in Zone, the Data Zone and the Lead-out Zone. The Data Zone is intended for the recording of Main Data. The Lead-in Zone contains control information. The Lead-out Zone allows for a continuous smooth read-out.

24.1 Layout of the Information Zone

The Information Zone shall be sub-divided as shown in Table 6. The values of the radii indicated are nominal values for the first Physical Sector and the last track of the last Physical Sector of a zone.

Table 6 – Layout of the Information Zone

	Nominal radius in mm			Start Sector Number	Number of Physical Sectors
Lead-in Zone Initial Zone				(022FA0)	45664
Buffer Zone 0				(02E200)	512
R-Physical Format Information Zone				(02E400)	3 072
Reference Code Zone				(02F000)	32
Buffer Zone 1				(02F020)	480
Control Data Zone				(02F200)	3 072
Extra Border Zone				(02FE00)	512
Data Zone	24,0 to r_1			(030000)	
Lead-out Zone for 120 mm disk	r_1 to 35,0 min. when $r_1 < 34,0$	r_1 to (r_1 + 1,0) when $34,0 \le r_1 \le 57,5$	r_1 to 58,5 when $57,5 \le r_1 \le 58,0$		
Lead-out Zone for 80 mm disk	r_1 to 35,0 min. when $r_1 < 34,0$	r_1 to (r_1 + 1,0) when $34,0 \le r_1 \le 37,5$	r_1 to 38,5 when $37,5 \le r_1 \le 38,0$		

24.2 Physical Sector numbering

The first Physical Sector of the Data Zone shall have the sector number (030000). Physical Sectors do not comprise gaps. They follow each other continuously from the beginning of the Lead-in Zone to the end of the Lead-out Zone. The Physical Sector Number (PSN) increases continuously from the beginning of the Lead-in Zone to the end of the Lead-out Zone. See Figure 35.

© ISO/IEC 2005 — All rights reserved
Copyright International Organization for Standardization
Reproduced by IHS under license with ISO
No reproduction or networking permitted without license from IHS
Not for Resale

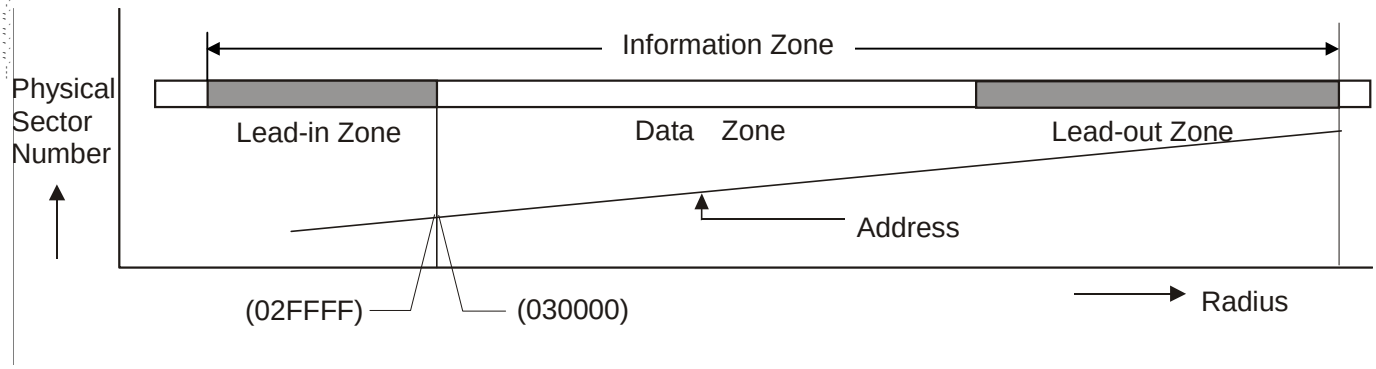

Figure 35 - Physical Sector numbering

25 Lead-in and Lead-out Zone

25.1 Lead-in Zone

The Lead-in Zone is the innermost zone of the Information Zone. It shall consist of the following parts, see Figure 36.

- Initial Zone,
- Buffer Zone 0,
- R-Physical Format Information Zone,
- Reference Code Zone,
- Buffer Zone 1,
- Control Data Zone,
- Extra Border Zone.

The Sector number of the first Physical Sector of each part is indicated in Figure 36 in hexadecimal notation.

	Initial Zone In all Physical Sectors the Main Data is set to (00)	Sector No.(022FA0) (Lead-in start)
Sector No.188 928	Buffer Zone 0 512 Physical Sectors with the Main Data set to (00)	Sector No.(02E200)
Sector No.189 440	R-Physical Format Information Zone 3 072 Physical Sectors	Sector No.(02E400)
Sector No.192 512	Reference Code Zone 32 Physical Sectors	Sector No.(02F000)
Sector No. 192 544	Buffer Zone 1 480 Physical Sectors with the Main Data set to (00)	Sector No.(02F020)
Sector No.193 024	Control Data Zone 3 072 Physical Sectors	Sector No.(02F200)
Sector No.196 096	Extra Border Zone 512 Physical Sectors	Sector No.(02FE00)
Sector No.196 608	Data Zone	Sector No.(030000)

Figure 36 - Lead-in Zone

© ISO/IEC 2005 – All rights reserved

Copyright International Organization for Standardization
Reproduced by IHS under license with ISO
No reproduction or networking permitted without license from IHS
Not for Resale

25.1.1 Initial Zone

The Main Data of the Data Frames eventually recorded as Physical Sectors in the Initial Zone shall be set to (00).

25.1.2 Buffer Zone 0

This zone shall consist of 512 sectors from 32 ECC Blocks. The Main Data of the Data Frames eventually recorded as Physical Sectors in this zone shall be set to (00).

25.1.3 R-Physical Format Information Zone

The R-Physical format information zone shall consist of 192 ECC Blocks (3 072 sectors) starting from Sector number (02E400).

The content of the 16 sectors of each R-Physical format information block is repeated 192 times. The structure of a R-Physical format information block shall be as shown in Figure 37.

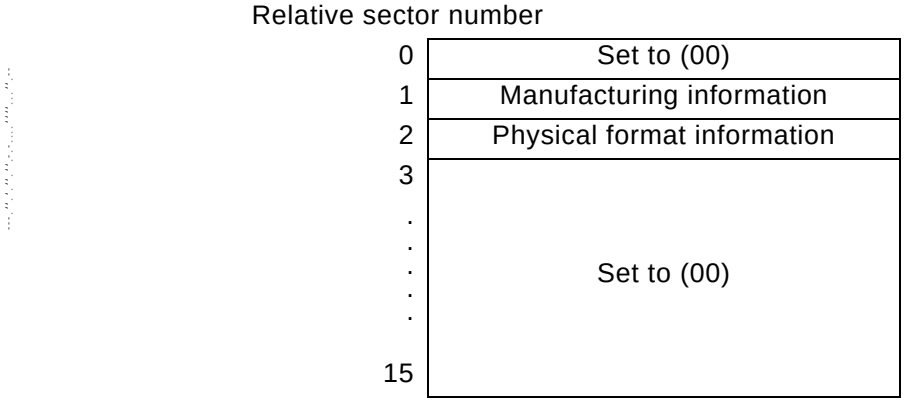

Figure 37 - Structure of a R-Physical format information block

25.1.3.1 Manufacturing information

This International Standard does not specify the format and the content of these 2 048 bytes. Unless otherwise agreed to by the interchange parties, this content shall be ignored in interchange.

25.1.3.2 Physical format information

This information shall comprise the 2 048 bytes shown in Table 7 and described below.

Table 7 – Physical format information

BP	Content	Number of bytes
0	Disk Category and Version Number	1
1	Disk size and maximum transfer rate of the disk	1
2	Disk structure	1
3	Recorded density	1
4 to 15	Data Zone allocation	12
16	NBCA descriptor	1
17 to 31	Set to (00)	15
32 to 39	Sector Number of the first sector of the Border Zone	8
40 to 2 047	Set to (00)	2 008

© ISO/IEC 2005 — All rights reserved
Copyright International Organization for Standardization
Reproduced by IHS under license with ISO
No reproduction or networking permitted without license from IHS
Not for Resale

Byte 0 – Disk Category and Version Number

Bits b_0 to b_3 shall specify the Version Number.

They shall be set to 0101, indicating this International Standard.

Bits b_4 to b_7 shall specify the Disk Category.

These bits shall be set to 0010, indicating a Recordable disk.

Other settings are prohibited by this International Standard.

Byte 1 – Disk size and maximum transfer rate of the disk

Bits b_0 to b_3 shall specify the Maximum transfer rate of the disk:

If set to 0000, they specify a maximum transfer rate of 2,52 Mbits/s.
If set to 0001, they specify a maximum transfer rate of 5,04 Mbits/s.
If set to 0010, they specify a maximum transfer rate of 10,08 Mbits/s.
If set to 1111, they do not specify a maximum transfer rate.

Bits b_4 to b_7 shall specify the Disk size:

If the diameter of the disk is 120 mm, they shall be set to 0000.
If the diameter of the disk is 80 mm, they shall be set to 0001.

Other settings are prohibited by this International Standard.

Byte 2 – Disk structure

Bits b_0 to b_3 shall specify the Layer type.

They shall be set to 0010, indicating that the disk contains Recordable user data Zone(s).

Bit b_4 shall specify the Track path. It shall be set to ZERO.

Bits b_5 and b_6 shall specify the Number of recorded layers. These bits shall be set to 00.

Bit b_7 shall be set to ZERO.

Other settings are prohibited by this International Standard.

Byte 3 – Recorded density

Bits b_0 to b_3 shall specify the Average track pitch.

They shall be set to 0000, indicating the average track pitch of 0,74 µm.

Bits b_4 to b_7 shall specify the Average Channel bit length.

They shall be set to 0000, indicating 0,133 µm.

Other settings are prohibited by this International Standard.

Bytes 4 to 15 – Data Zone allocation

Byte 4 shall be set to (00).

© ISO/IEC 2005 – All rights reserved

Copyright International Organization for Standardization
Reproduced by IHS under license with ISO
No reproduction or networking permitted without license from IHS
Not for Resale

Bytes 5 to 7 shall be set to (030000) to specify the Sector number 196 608 of the first Physical Sector of the Data Zone.

Byte 8 shall be set to (00).

Bytes 9 to 11 shall specify the Last recorded address in the last RZone in the Bordered area (see Annex M).

When the Lead-in Zone is recorded in the Disk at once recording mode, these bits shall specify the End sector number of the Data Zone.

Bytes 12 to 15 shall be set to (00).

Other settings are prohibited by this International Standard.

Byte 16 – NBCA descriptor

Bit b_7 shall specify whether or not there is NBCA on the disk, see Annex L.

If NBCA does not exist, it shall be set to ZERO.

If NBCA exist, it shall be set to ONE.

Bit b_6 to b_0 shall be set to 000 0000.

Other settings are prohibited by this International Standard.

Bytes 17 to 31

These bytes shall be set to (00).

Bytes 32 to 39 – Sector Number of the first sector of the Border Zone (See Annex M)

Bytes 32 to 35 shall specify the Start sector number of the Current Border-out.

Bytes 36 to 39 shall specify the Start sector number of the Next Border-in.

When the Lead-in Zone is recorded in the Disk at once recording mode, this filed shall be set to (00). In the case of Incremental recording mode, “Start sector number of the current Border-out” field specify the start sector number of the Border-out of the current Bordered zone and “Start sector number of the next Border-in” field shall specify the start sector number of the Border-in of the next Bordered zone. In the case that this field is set to (00), the next Bordered zone shall not be recorded.

Bytes 40 to 2 047

These bytes shall be set to (00).

25.1.4 Reference Code Zone

The Reference Code Zone shall consist of the 32 Physical Sectors from two ECC Blocks which generate specific Channel bit patterns (3T-6T-7T) on the disk. This shall be achieved by setting to (AC) all 2 048 Main Data bytes of each corresponding Data Frame. Moreover, no scrambling shall be applied to these Data Frames, except to the first 160 Main Data bytes of the first Data Frame of each ECC Block.

25.1.5 Buffer Zone 1

This zone shall consist of 480 Physical Sectors from 30 ECC Blocks. The Main Data of the Data Frames eventually recorded as Physical Sectors in this zone shall be set to (00). The last ECC Block of Buffer Zone 1

© ISO/IEC 2005 — All rights reserved
Copyright International Organization for Standardization
Reproduced by IHS under license with ISO
No reproduction or networking permitted without license from IHS
Not for Resale

shall be Block SYNC Guard Area. The Block SYNC Guard Area shall become a part of the Linking Loss Area after linking.

The pre-recorded area shall start from the linking sector of the Block SYNC Guard Area. The linking scheme shall be applied for the recording of the Buffer Zone 1 to connect to the Control Data Zone.

25.1.6 Control Data Zone

The Control Data Zone shall comprise 192 ECC Blocks (3 072 sectors) starting from Sector number 193 024, (02 F200) and each ECC Block of the Control Data Zone (Control data block) shall be pre-recorded or embossed.

The structure of a Control data block shall be as shown in Figure 38.

The first and second sectors in each Control data block shall contain the Pre-recorded Physical format information and the Disk manufacturing information respectively, and the contents of the Pre-recorded Physical format information shall be repeated 192 times.

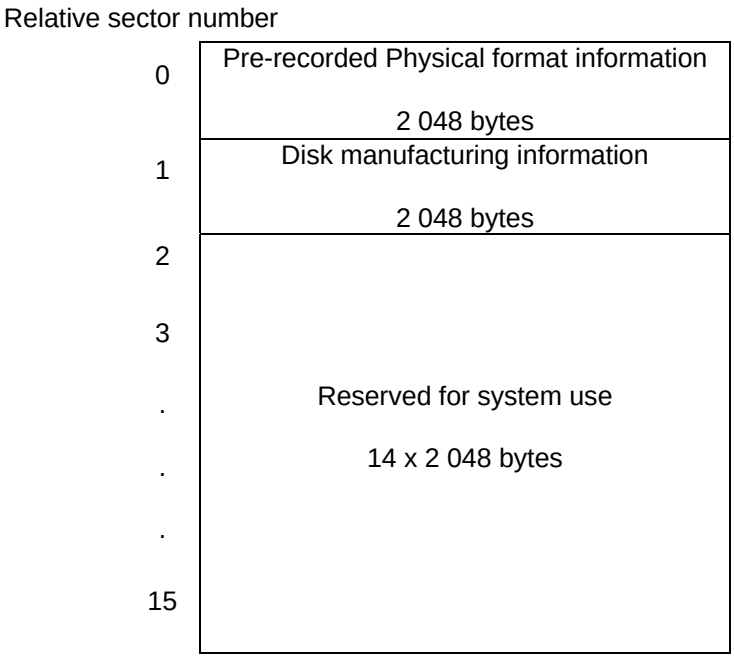

Figure 38 - Structure of a Control data block

25.1.6.1 Pre-recorded Physical format information

This information shall comprise the 2 048 bytes shown in Table 8 and described below.

© ISO/IEC 2005 – All rights reserved
Copyright International Organization for Standardization
Reproduced by IHS under license with ISO
No reproduction or networking permitted without license from IHS
Not for Resale

Table 8 – Pre-recorded Physical format information

BP	Content	Number of bytes
0	Disk Category and Version Number	1
1	Disk size and maximum transfer rate	1
2	Disk structure	1
3	Recorded density	1
4 to 15	Data Zone allocation	12
16	NBCA descriptor	1
17 to 31	Set to (00)	15
32 to 39	Sector number of the 1st sector of the Extra Border Zone	8
40 to 2 047	Set to (00)	2 008

Byte 0 – Disk Category and Version Number

Bits b_0 to b_3 shall specify the Version Number.

They shall be set to 0101, indicating this International Standard.

Bits b_4 to b_7 shall specify the Disk Category.

These bits shall be set to 0010, indicating a Recordable disk.

Other settings are prohibited by this International Standard.

Byte 1 – Disk size and maximum transfer rate of the disk

Bits b_0 to b_3 shall specify the Maximum transfer rate of the disk.

They shall be set to 1111, indicating Not specified.

Bits b_4 to b_7 shall specify the Disk size:

If the diameter of the disk is 120 mm, they shall be set to 0000.
If the diameter of the disk is 80 mm, they shall be set to 0001.

Other settings are prohibited by this International Standard.

Byte 2 – Disk structure

Bits b_0 to b_3 shall specify the Layer type.

They shall be set to 0010, indicating that the disk contains Recordable user data Zone(s).

Bit b_4 shall specify the Track path. It shall be set to ZERO.

Bits b_5 and b_6 shall specify the Number of layers. These bits shall be set to 00.

Bit b_7 shall be set to ZERO.

Other settings are prohibited by this International Standard.

© ISO/IEC 2005 — All rights reserved
Copyright International Organization for Standardization
Reproduced by IHS under license with ISO
No reproduction or networking permitted without license from IHS
Not for Resale

Byte 3 – Recorded density

Bits b_0 to b_3 shall specify the Average track pitch.

They shall be set to 0000, indicating the average track pitch of 0,74 µm.

Bits b_4 to b_7 shall specify the Channel bit length.

They shall be set to 0000, indicating 0,133 µm.

Other settings are prohibited by this International Standard.

Bytes 4 to 15 – Data Zone allocation

Byte 4 shall be set to (00).

Bytes 5 to 7 shall be set to (030000) to specify the Sector Number 196 608 of the first Physical Sector of the Data Zone.

Byte 8 shall be set to (00).

Bytes 9 to 11 shall specify the Outer limit of Data Recordable zone. These bytes shall be set to the sector number corresponding to the ECC Block address specified in the pre-pit information for Pre-pit data block of Field ID1. See 27.3.5.3.

Byte 12 shall be set to (00).

Bytes 13 to 15 shall be set to (00).

Other settings are prohibited by this International Standard.

Byte 16 – NBCA descriptor

Bit b_7 shall specify whether or not there is NBCA on the disk, see Annex L.

If NBCA does not exist, it shall be set to ZERO.

If NBCA exists, it shall be set to ONE.

Bit b_6 to b_0 shall be set to 000 0000.

Other settings are prohibited by this International Standard.

Bytes 17 to 31

These bytes shall be set to (00).

Bytes 32 to 39 – Sector number of the 1st sector of the extra Border Zone

Bytes 32 to 35 shall specify the Start sector number of Current RMD in Extra Border Zone.

They shall be set to (02FE10).

Bytes 36 to 39 shall specify the Start sector number of Physical format information blocks in Extra Border Zone.

They shall be set to (02FFA0).

Bytes 40 to 2 047

These bytes shall be set to (00).

--`,,```,,,,````-`-`,,`,,`,`,,`---
© ISO/IEC 2005 – All rights reserved
Copyright International Organization for Standardization
Reproduced by IHS under license with ISO
No reproduction or networking permitted without license from IHS
Not for Resale

25.1.6.2 Disk manufacturing information

This International Standard does not specify the format and the content of these 2 048 bytes. Unless otherwise agreed to by the interchange parties, they shall be ignored in interchange.

25.1.6.3 Reserved for system use

The bit setting in this field is application dependent, for instance a video application. If this setting is not specified by the application, the default setting shall be all ZEROs.

25.1.7 Extra Border Zone

The configuration of Extra Border Zone shall be as shown in Table 9.

Table 9 – Structure of Extra Border Zone

Unit Position	Contents	
0	Linking Loss Area (All (00))	
1 to 5	Current RMD	
6 to 25	Reserved (Set to (00))	
26 to 30	Physical format information blocks	
31	Reserved (Set to (00))*	Block SYNC Guard Area**

* Disk at once recording mode **Incremental recording mode

Unit Position indicates the relative ECC block position from the beginning of Extra Border Zone.

The Data type bit of the sector just before each Sector 0 in the 5 copies of current RMD shall be set to ZERO.

Physical format information block shall be recorded five times with a data structure as shown in Figure 39.

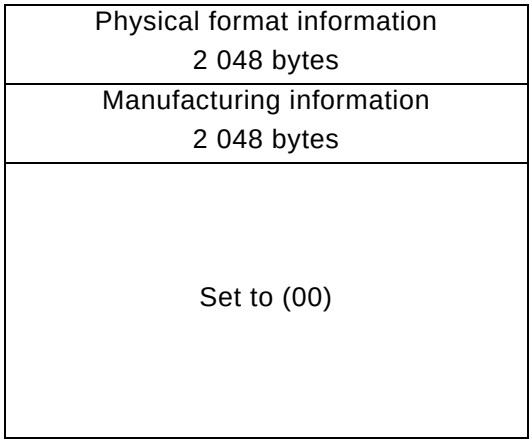

Figure 39 - Structure of Physical format information block

Physical format information shall be as specified in 25.1.3.2.

Manufacturing information shall be as specified in 25.1.3.1.

25.2 Lead-out Zone

The Main Data of the Data Frames eventually recorded as Physical Sectors in the Lead-out Zone shall be set to (00). This International Standard does not specify the number of Physical Sectors in the Lead-out Zone.

© ISO/IEC 2005 — All rights reserved
Copyright International Organization for Standardization
Reproduced by IHS under license with ISO
No reproduction or networking permitted without license from IHS
Not for Resale

Section 6 - Format of the Unrecorded Zone

26 General description of the Unrecorded Zone

A continuous spiral pre-groove that extends from the inner part of the disk to the outer diameter of the disk forms the track of the Unrecorded Zone. The track is wobbled at a specified frequency to control the drive functions. The precise address information for an unrecorded disk is embossed on the land between adjacent grooved regions.

The Unrecorded Zone shall be divided into two parts: the R-Information Zone and the Information Zone.

The R-Information Zone shall be divided into two parts: the Power Calibration Area and the Recording Management Area.

The Information Zone shown in Figure 40 shall be divided into three parts. Starting from the inner radius, these zones are the Lead-in Zone, the Data Recordable Zone, and the Lead-out Zone. The allocation of the Lead-out Zone will be determined by finalization. These three zones are essential and identical in principle to the same zones on a DVD-Read-Only disk.

The recording data shall be recorded in the pre-groove guided by the wobble and Pre-pit Information that is embossed in the land.

The accurate start address before recording shall be determined by decoding the Pre-pit Information on the land.

26.1 Layout of the Unrecorded Zone

The Unrecorded Zone shall be sub-divided as shown in Table 10. The ECC Block address (see clause 26.2) of the first block of each zone is shown in Table 10.

Table 10 – Layout of the Unrecorded Zone

		ECC Block address of the first block of the Zone	Number of blocks
R-Information Zone	Power Calibration Area	(FFE17F)	443
	Recording Management Area	(FFDFC3)	701
Lead-in Zone		(FFDD05)	3 334
Data Zone		(FFCFFF)	…..

26.2 ECC Block address

The ECC Block address (see 4.10 and 27.3.2) shall be the absolute physical address of the track.

The start and stop positions of each zone shall be defined using the ECC Block address.

The address shall decrease from the inside to outside diameter of the disk.

The address shall be embossed on the land as the Pre-pit Information.

© ISO/IEC 2005 – All rights reserved
Copyright International Organization for Standardization
Reproduced by IHS under license with ISO
No reproduction or networking permitted without license from IHS
Not for Resale

26.3 ECC Block numbering

The ECC Block address shall decrease continuously from the inner radius to the outer radius of the disk. The ECC Block address shall be calculated by setting the ECC Block address so that the block placed at the beginning of the Data Zone shall be (FFCFFF). This first block of the Data Zone shall be located after the Lead-in Zone.

The Power Calibration Area and Recording Management Area shown in Figure 40 shall be located before the Lead-in Zone.

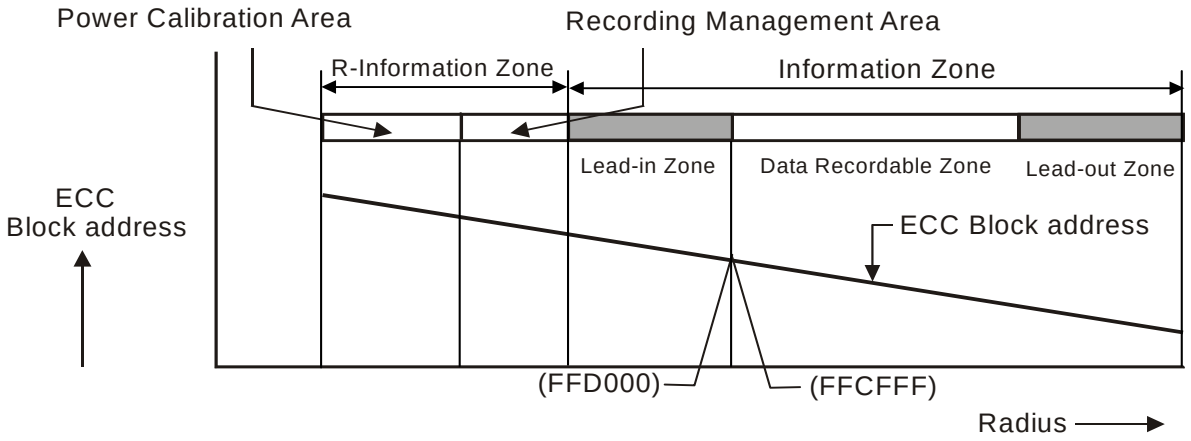

Figure 40 – Pre-pit sector layout and ECC Block numbering

27 Pre-pit Data format

27.1 General description

The Pre-pit Data is embossed as a sequence of Pre-pits on the land. The Pre-pit Data sequence corresponds to 16 sectors of the same physical size as 1 ECC Block to be recorded in the groove.

One set of Pre-pits shall be given by 3 bits (b_2, b_1, b_0) every two SYNC Frames. The first set of Pre-pits in a Pre-pit physical sector is the Pre-pit SYNC Code. The first bit of the 3 bits is called the frame SYNC bit. In the Incremental recording mode, the frame SYNC bit shall be located at the special position of the recorded SYNC Code of the 16-bit Code Words in the groove. The assignment of these bits shall be as shown in Table 11.

Table 11 – Assignment of Land Pre-pit

	b_2	b_1	b_0
Pre-pit SYNC Code in Even position	1	1	1
Pre-pit SYNC Code in Odd position	1	1	0
Pre-pit data set to ONE	1	0	1
Pre-pit data set to ZERO	1	0	0

The assigned position of Pre-pits and the SYNC pattern of 16-bit Code words shall be as shown in Figures 41 and 42. The relation in phase between wobble and Land Pre-pit also shall be as specified in 14.5.3.

--`,,```,,,,````-`-`,,`,,`,`,,`---
Copyright International Organization for Standardization
Reproduced by IHS under license with ISO
No reproduction or networking permitted without license from IHS
Not for Resale
© ISO/IEC 2005 — All rights reserved

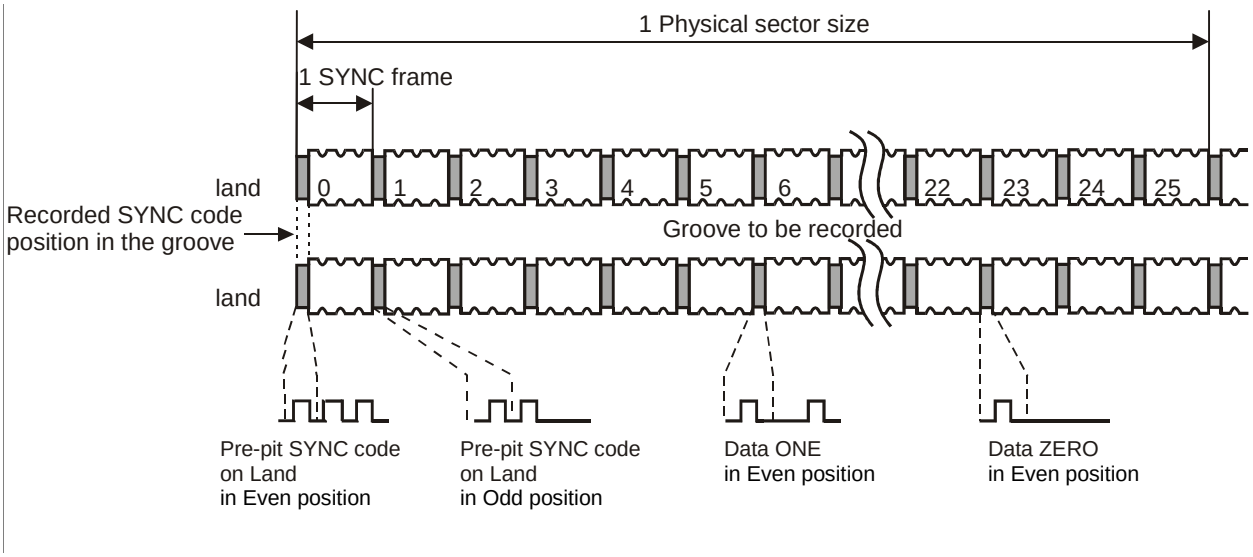

Figure 41 - Track formation

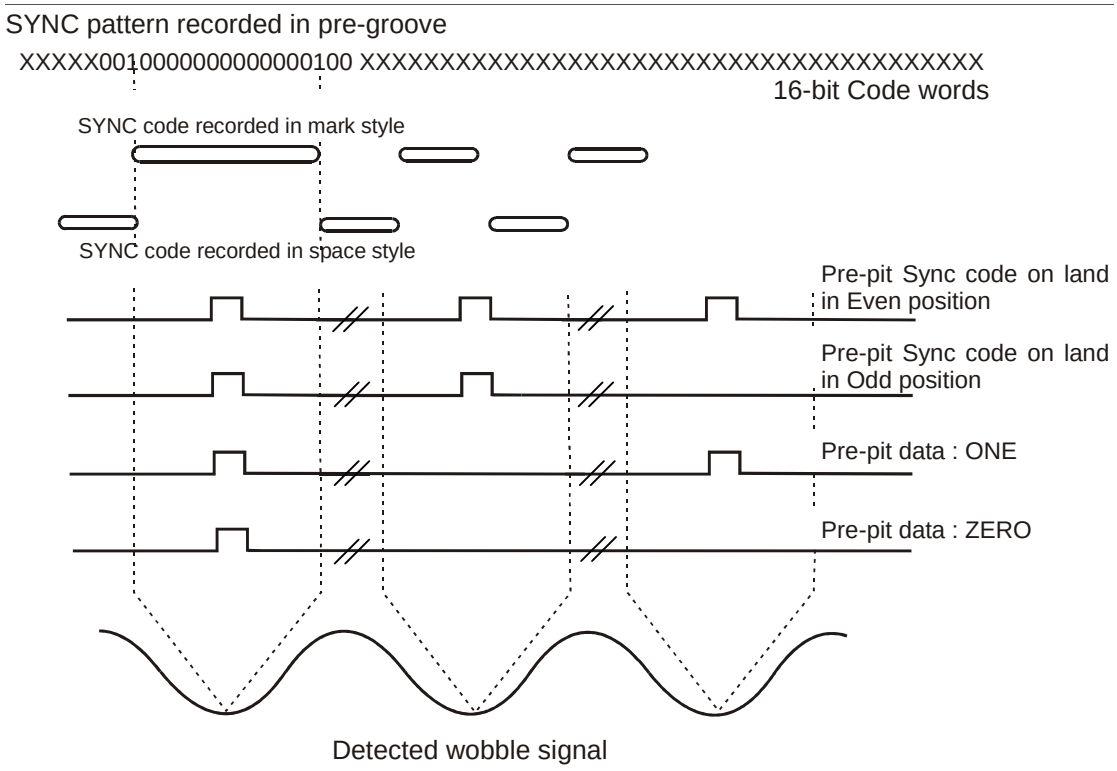

Figure 42 - Relationship of signals recorded in groove and land

There are two cases of Pre-pit position in two SYNC Frames called Even position and Odd position. Normally the Pre-pit should be recorded at the Even position. In mastering, when there is already a Pre-pit on the neighbouring land, the position of the Pre-pits shall be shifted to the Odd position sequence. Such a case is described in Figure 43.

The Pre-pits position can be shifted in a Pre-pit physical sector.

© ISO/IEC 2005 – All rights reserved

Copyright International Organization for Standardization
Reproduced by IHS under license with ISO
No reproduction or networking permitted without license from IHS
Not for Resale

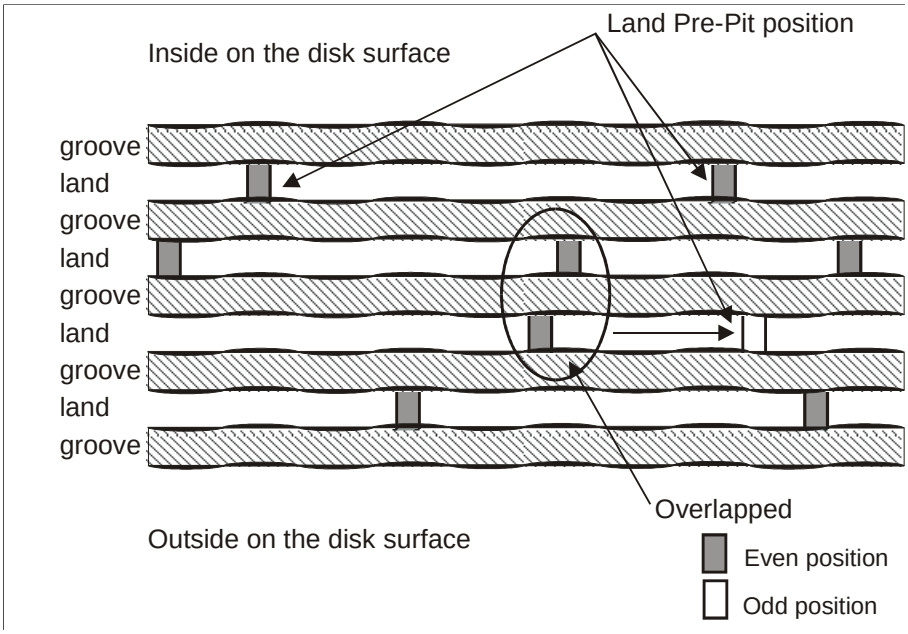

Figure 43 - Layout of land Pre-pit positioning

The Pre-pit data frame shall consist of 4 bits of relative address specified in 27.3.1 and 8 bits of user data.

Pre-pit data shall be recorded in the user data area of the Pre-pit data frame. The Pre-pit data frame shall be as shown in Figure 44.

The Pre-pit physical sector shall be a Pre-pit data frame after transforming 1 bit into 3 bits and adding Pre-pit SYNC Code. The Pre-pit physical sector shall be recorded on the land as part of the Land Pre-Pit recording. See Figure 45 and Table 11.

Relative address	User data
4 bits	8 bits

Figure 44 - Pre-pit data frame structure

Pre-pit SYNC Code	Transformed relative address	Transformed user data
3 bits	12 bits	24 bits

Figure 45 - Pre-pit physical sector structure

27.2 Pre-pit block structure

A Pre-pit data block shall be constructed with 16 Pre-pit data frames.

The Pre-pit data block shall have two data parts, part A and part B.

© ISO/IEC 2005 — All rights reserved
Copyright International Organization for Standardization
Reproduced by IHS under license with ISO
No reproduction or networking permitted without license from IHS
Not for Resale

Part A shall consist of 3 bytes of ECC Block address (see 27.3.2) and 3 bytes of parity A (see 27.3.3), and relative address 0000 to 0101 (see 27.3.1), thus Part A is constructed with 6 Pre-pit data frames.

Part B shall consist of 1 byte of Field ID, 6 bytes of disk information and 3 bytes of parity B and relative address 0110 to 1111. Thus Part B is constructed with 10 Pre-pit data frames.

The Pre-pit physical block shall be constructed with 16 Pre-pit physical sectors which are constructed by transforming each 1 bit of Pre-pit data block to 3 bits and adding the Pre-pit SYNC Code.

This signal processing shall be as shown in Figure 46.

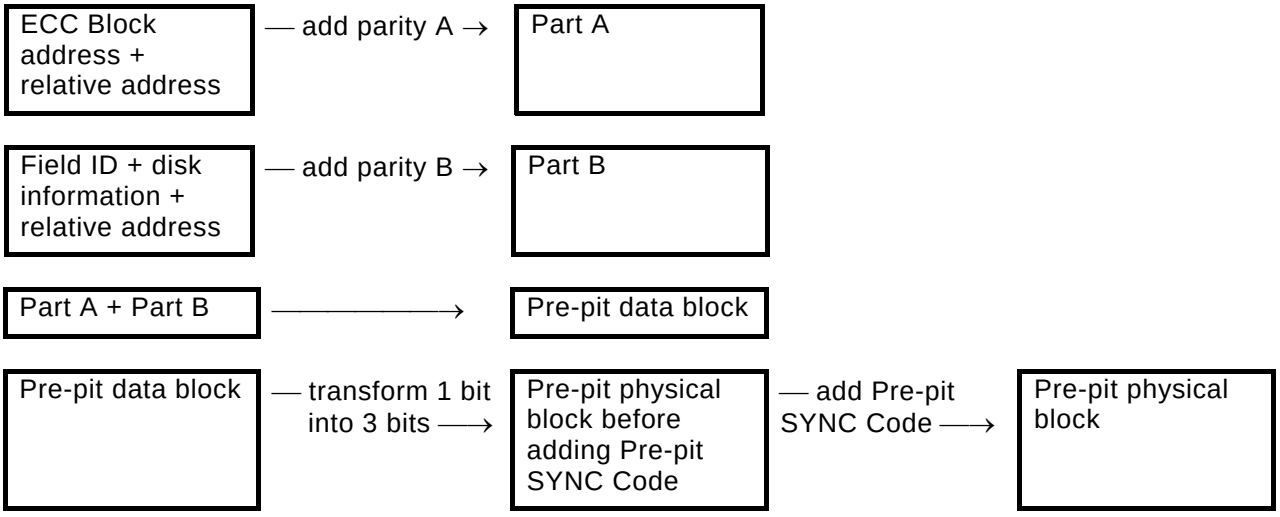

Figure 46 - Processing order to construct a Pre-pit block

The Pre-pit block structure shall be as shown in Figure 47.

	Pre-pit physical block (using transformed Pre-pit data block, see Table 11)		
	Pre-pit data block		
Pre-pit SYNC Code	Relative address 0000 to 0101	ECC Block address (3 bytes)	Part A
		Parity A (3 bytes)	
	Relative address 0110 to 1111	Pre-pit field ID and disk information (7 bytes)	Part B
		Parity B (3 bytes)	

Figure 47 - Pre-pit block structure

© ISO/IEC 2005 – All rights reserved
Copyright International Organization for Standardization
Reproduced by IHS under license with ISO
No reproduction or networking permitted without license from IHS
Not for Resale

A Pre-pit physical block shall be as shown schematically in Figure 48.

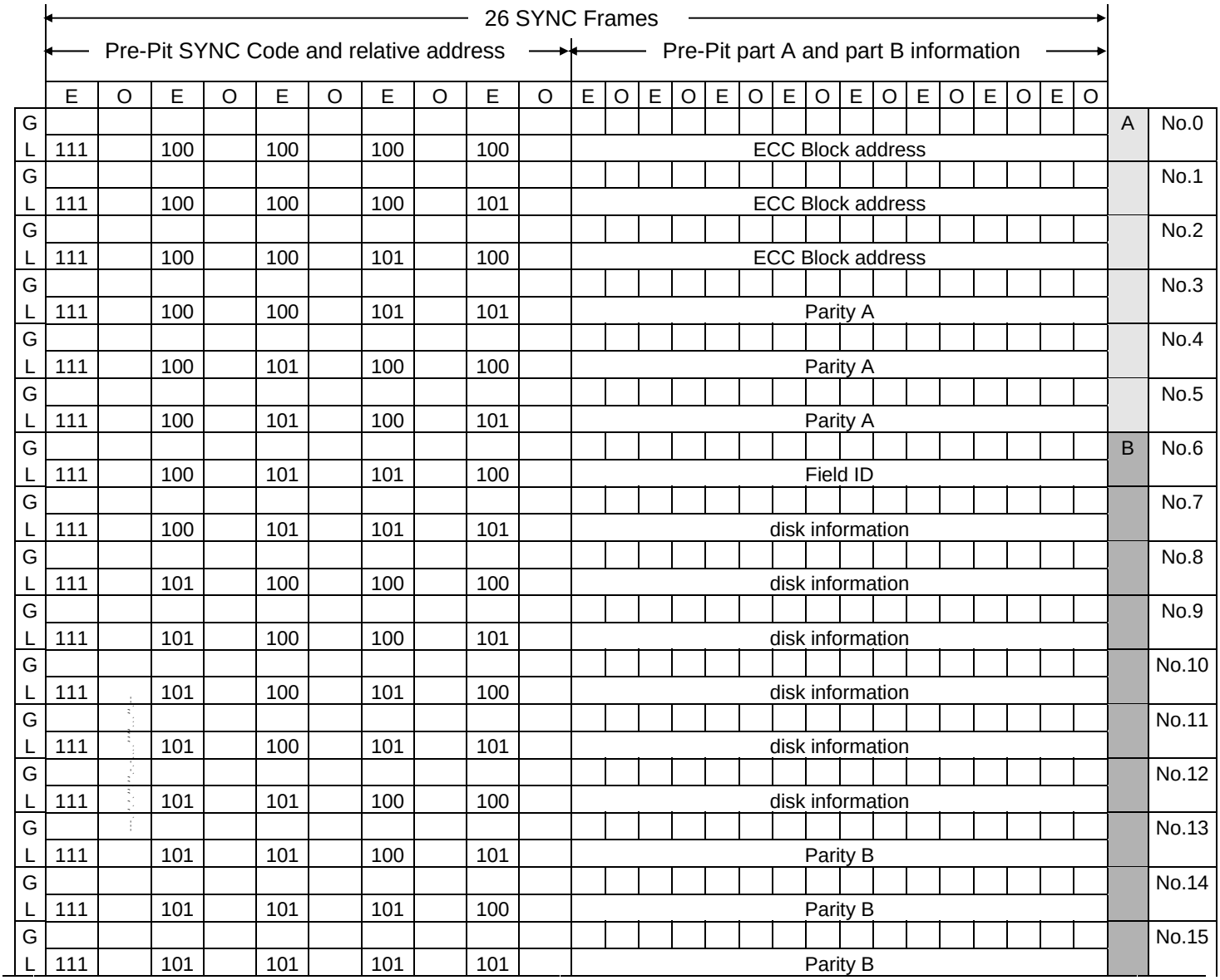

Legend:

i. G means groove, L means land, E means even position, O means odd position.

ii. Pre-pits SYNC Code is shown in even position in this representation. Relative address Pre-pit Data ONE is represented by 101 and Pre-pit Data ZERO is represented by 100 in this representation. The assignment of land Pre-pits is specified in Table 11.

iii. Last column is the Pre-pit Physical Sector Number in a Pre-pit physical block.

iv. Second from last column denotes the part A and part B of the Pre-pit physical block structure.

Figure 48 - Pre-pit physical block

27.3 Pre-pit data block configuration

User data of Part A and Part B is called Pre-pit information. Pre-pit information of Part A shall be the ECC Block address. Pre-pit information of Part B shall be recorded in the disk information fields of Part B.

© ISO/IEC 2005 — All rights reserved
Copyright International Organization for Standardization
Reproduced by IHS under license with ISO
No reproduction or networking permitted without license from IHS
Not for Resale

The contents of the disk information in Part B are classified and shall be distinguished by Field ID. Therefore each Pre-pit data block including the classified Part B shall be distinguished by a Field ID.

The classification and the location of the Pre-pit data blocks shall be as shown in Table 12.

Table 12 – Classification and location of Pre-pit data blocks

Field ID	Contents of disk information in Part B	Location
0	ECC Block address	All Zones
1	Application code / Physical data	Lead-in Zone
2	OPC suggested code / 1st field of Write Strategy code	Lead-in Zone
3	1st field of Manufacturer ID	Lead-in Zone
4	2nd field of Manufacturer ID	Lead-in Zone
5	2nd field of Write Strategy code	Lead-in Zone

In the Lead-in Zone, Pre-pit data blocks of Field ID 1 to 5 shall be recorded as shown in Figure 49.

Field ID	Location	ECC Block address
Field ID1	Start of the Lead-in Zone	(FFDD05)
Field ID2		
Field ID3		
Field ID4		
Field ID5		
Field ID1		
Field ID2		
Field ID3		
Field ID4		
Field ID5		
Field ID1		
:		
:		
:		
Field ID4		
Field ID5		
Field ID0		(FFD003)
Field ID0		(FFD002)
Field ID0		(FFD001)
Field ID0	End of the Lead-in Zone	(FFD000)
Field ID0		(FFCFFF)

Figure 49 - Layout of Pre-pit data blocks in the Lead- in Zone

27.3.1 Relative address

The Pre-pit data frame contains a relative address. The relative address shows the position of 16 Pre-pit data frames (one Pre-pit data block). Four bits shall be used to specify the relative address.

0000 First Pre-pit data frame
0001 Second Pre-pit data frame

© ISO/IEC 2005 – All rights reserved

Copyright International Organization for Standardization
Reproduced by IHS under license with ISO
No reproduction or networking permitted without license from IHS
Not for Resale

:
:
1111 Last Pre-pit data frame

The relative address number shall be equal to the decimal value represented by the least significant 4 bits of the Physical Sector Number recorded in the groove. The relative address shall not have error detection and error correction code.

27.3.2 ECC Block address data configuration

The ECC Block address shall be equal to the bit-inverted decimal value represented by b_{23} to b_4 of the Physical Sector Number recorded in the adjacent inner groove. The ECC Block address at the start of Data Zone shall be (FFCFFF) as shown in Figure 50.

The ECC Block address shall have parity. Therefore error correction is possible.

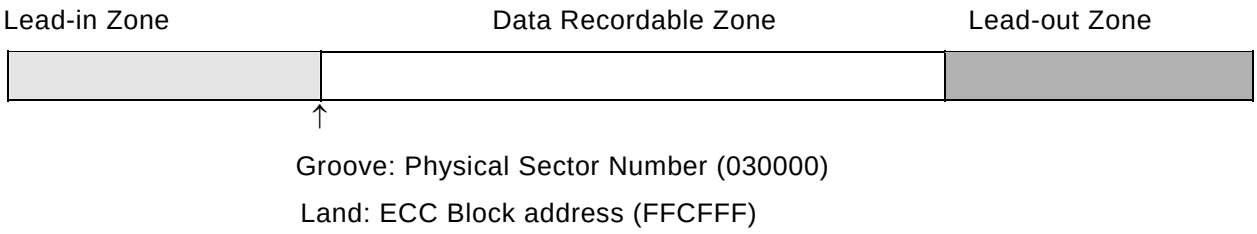

Figure 50 - Relation between Physical Sector Number and ECC Block address

The allocation of the Lead-out Zone shall be determined by finalization.

NOTE The "ECC Block address" definition is specific to this Standard.

27.3.3 Parity A and Parity B

When in Figure 51, each byte allocated in the matrix is C_j (j = 0 to 15), then each byte for parity,

C_j (j = 3 to 5 and j = 13 to 15), shall be as follows.

Parity A :

$$\text{Parity A}(x) = \sum_{j=3}^{5} C_j x^{5-j} = I(x)\, x^3 \bmod G_E(x)$$

where

$$I(x) = \sum_{j=0}^{2} C_j x^{2-j}$$

$$G_E(x) = \prod_{k=0}^{2} (x + \alpha^k)$$

α is the primitive root of the primitive polynomial $Gp(x) = x^8 + x^4 + x^3 + x^2 + 1$.

Copyright International Organization for Standardization
Reproduced by IHS under license with ISO
No reproduction or networking permitted without license from IHS
© ISO/IEC 2005 — All rights reserved
Not for Resale

Parity B:

$$\text{Parity B}(x) = \sum_{j=13}^{15} C_j\, x^{15-j} = I(x)\, x^3 \bmod G_E(x)$$

where

$$I(x) = \sum_{j=6}^{12} C_j\, x^{12-j}$$

$$G_E(x) = \prod_{k=0}^{2} (x + \alpha^k)$$

α is the primitive root of the primitive polynomial $Gp(x) = x^8 + x^4 + x^3 + x^2 + 1$.

27.3.4 Field ID0

The Pre-pit data block configuration of Field ID0 shall be as shown in Figure 51.

Pre-pit data frame number	Bit Position			
	0	1 to 4	5 (msb) to 12 (lsb)	
0	Pre-pit SYNC Code*	0000	First byte of ECC Block address	Part A
1		0001	Second byte of ECC Block address	
2		0010	Third byte of ECC Block address	
3		0011	First byte of Parity A	
4		0100	Second byte of Parity A	
5		0101	Third byte of Parity A	
6		0110	Field ID (00)	Part B
7		0111	First byte of ECC Block address	
8		1000	Second byte of ECC Block address	
9		1001	Third byte of ECC Block address	
10		1010	Set to (00)	
11		1011	Set to (00)	
12		1100	Set to (00)	
13		1101	First byte of Parity B	
14		1110	Second byte of Parity B	
15		1111	Third byte of Parity B	

* The Pre-pit SYNC Code shall be added to the Pre-pit data block to construct the Pre-pit physical block

Figure 51 - Pre-pit data block configuration of Field ID0

--`,,```,,,,````-`-`,,`,,`,`,,`---

© ISO/IEC 2005 - All rights reserved
Copyright International Organization for Standardization
Reproduced by IHS under license with ISO
No reproduction or networking permitted without license from IHS
Not for Resale

27.3.5 Field ID1

The Pre-pit block configuration of Field ID1 shall be as shown in Figure 52.

Pre-pit data frame number	Bit Position			
	0	1 to 4	5 (msb) to 12 (lsb)	
0	Pre-pit SYNC Code*	0000	First byte of ECC Block address	Part A
1		0001	Second byte of ECC Block address	
2		0010	Third byte of ECC Block address	
3		0011	First byte of Parity A	
4		0100	Second byte of Parity A	
5		0101	Third byte of Parity A	
6		0110	Field ID (01)	Part B
7		0111	Application code	
8		1000	Disk physical code	
9		1001	First byte of Last address of Data Recordable Zone	
10		1010	Second byte of Last address of Data Recordable Zone	
11		1011	Third byte of Last address of Data Recordable Zone	
12		1100	Version number / Extension code	
13		1101	First byte of Parity B	
14		1110	Second byte of Parity B	
15		1111	Third byte of Parity B	

* The Pre-pit SYNC Code shall be added to the Pre-pit data block to construct the Pre-pit physical block

Figure 52 - Pre-pit data block configuration of Field ID1

27.3.5.1 Application code

The Application code shall be specified as follows.

Bit Position 5 set to ZERO

Bit Position 6 set to ZERO : Disk for restricted use

Bit Position 7 to 12 set to 000000 : General purpose disk for use in general purpose drives.

Bit Position 7 to 12 set to others : Special purpose disk for use only in special drives.

Bit Position 6 set to ONE : Disk for unrestricted use

Bit Position 7 to 12 set to 000000 : Consumer purpose disk for use in consumer purpose drives

Bit Position 7 to 12 set to others : Reserved

27.3.5.2 Disk physical code

Basic physical characteristics of the disk shall be specified in the Disk physical code field as shown in Table 13.

--`,,```,,,,````-`-`,,`,,`,`,,`---
© ISO/IEC 2005 — All rights reserved
Copyright International Organization for Standardization
Reproduced by IHS under license with ISO
No reproduction or networking permitted without license from IHS
Not for Resale

Table 13 – Disk physical code

Bit position	Content	Bit settings and meaning
5 (msb)	Track pitch	Set to ONE, indicating the track pitch is 0,74 μm
6	Reference velocity	Set to ONE, indicating the reference velocity is 3,49 m/s
7	Disk diameter	ZERO = 120 mm ONE = 80 mm
8	Reflectivity(1)	Set to ZERO, indicating the reflectivity is 45 % to 85 %
9	Reflectivity(2)	Set to ZERO
10	Media type(1)	ZERO = Organic dye ONE = others
11	Media type(2)	Set to ZERO, indicating Recordable media
12 (lsb)	Recording wavelength	Set to One, indicating the laser wavelength is 650nm

27.3.5.3 Last address of Data Recordable Zone

The last ECC Block address of the Data Recordable Zone shall be specified in hexadecimal notation in the Last Address of Data Recordable Zone field.

The last ECC Block address shall be defined to ensure the user data capacity of 4,70 Gbytes per side for 12 cm disk, and 1,46 Gbytes per side for 8 cm disk respectively.

The Last address of Data Recordable Zone does not indicate the minimum ECC Block address of the disk but indicates the outer limit of the Data Recordable Zone. The Pre-pit physical block shall extend toward the outer diameter of the disk, beyond the zone indicated by the last address of Data Recordable Zone.

27.3.5.4 Version Number

These bits shall be set to 0101, indicating this International Standard.

Other settings are prohibited by this International Standard.

27.3.5.5 Extension code

These bits shall be set to 0000, indicating this International Standard.

Other settings are prohibited by this International Standard.

© ISO/IEC 2005 – All rights reserved

Copyright International Organization for Standardization
Reproduced by IHS under license with ISO
No reproduction or networking permitted without license from IHS
Not for Resale

27.3.6 Field ID2 and ID5

The Pre-pit data block configuration of Field ID2 and ID5 shall be as shown in Figure 53 and 54.

Pre-pit data frame number	Bit position			
	0	1 to 4	5 (msb) to 12 (lsb)	
0	Pre-pit SYNC Code*	0000	First byte of ECC Block address	Part A
1		0001	Second byte of ECC Block address	
2		0010	Third byte of ECC Block address	
3		0011	First byte of Parity A	
4		0100	Second byte of Parity A	
5		0101	Third byte of Parity A	
6		0110	Field ID (02)	Part B
7		0111	OPC suggested code (β value) / OPC suggested code (Recording Power)	
8		1000	Wavelength code	
9		1001	First byte of Write strategy code	
10		1010	Second byte of Write strategy code	
11		1011	Third byte of Write strategy code	
12		1100	Fourth byte of Write strategy code	
13		1101	First byte of Parity B	
14		1110	Second byte of Parity B	
15		1111	Third byte of Parity B	

* The Pre-pit SYNC Code shall be added to the Pre-pit data block to construct the Pre-pit physical block

Figure 53 - Pre-pit data block configuration of Field ID2

Pre-pit data frame number	Bit position			
	0	1 to 4	5 (msb) to 12 (lsb)	
0	Pre-pit SYNC Code*	0000	First byte of ECC Block address	Part A
1		0001	Second byte of ECC Block address	
2		0010	Third byte of ECC Block address	
3		0011	First byte of Parity A	
4		0100	Second byte of Parity A	
5		0101	Third byte of Parity A	
6		0110	Field ID (05)	Part B
7		0111	Fifth byte of Write strategy code	
8		1000	Sixth byte of Write strategy code	
9		1001	Seventh byte of Write strategy code	
10		1010	Eighth byte of Write strategy code	
11		1011	Ninth byte of Write strategy code	
12		1100	Tenth byte of Write strategy code (Basic Write Strategy code)	
13		1101	First byte of Parity B	
14		1110	Second byte of Parity B	
15		1111	Third byte of Parity B	

* The Pre-pit SYNC Code shall be added to the Pre-pit data block to construct the Pre-pit physical block

Figure 54 - Pre-pit data block configuration of Field ID5

--`,,```,,,,````-`-`,,`,,`,`,,`---
Copyright International Organization for Standardization
Reproduced by IHS under license with ISO
No reproduction or networking permitted without license from IHS
© ISO/IEC 2005 — All rights reserved
Not for Resale

27.3.6.1 OPC suggested code

The OPC suggested code field shall specify the optimum β value and the recording power for the disk. The β value and the recording power codes shall consist of upper and lower 4 bits in this field respectively, as shown in Table 14 and 15.

If each code is not specified, each 4 bits shall be set to 0000. See Annex H.

Table 14 – OPC suggested code (β value)

OPC suggested code	β value
0000	Not specified
0001	- 0,02
0010	- 0,01
0011	0,00
0100	0,01
0101	0,02
0110	0,03
0111	0,04
1000	0,05
1001	0,06
1010	0,07
1011	0,08
1100	0,09
1101	0,10
1110	0,11
1111	0,12

Table 15 – OPC suggested code (Recording Power)

OPC suggested code	Recording Power in mW
0000	Not specified
0001	6,0
0010	6,5
0011	7,0
0100	7,5
0101	8,0
0110	8,5
0111	9,0
1000	9,5
1001	10,0
1010	10,5
1011	11,0
1100	11,5
1101	12,0

Other settings are prohibited by this International Standard.

© ISO/IEC 2005 – All rights reserved

Copyright International Organization for Standardization
Reproduced by IHS under license with ISO
No reproduction or networking permitted without license from IHS
Not for Resale

27.3.6.2 Wavelength code

The wavelength code field shall specify the wavelength of the laser for the recommended recording power as shown in Table 16. If the OPC suggested code is set to (00), then all bytes of this field shall be set to (00).

Table 16 – Wavelength code

Wavelength code	Wavelength in nm
(00)	not specified
(01)	645
(02)	646
(03)	647
(04)	648
(05)	649
(06)	650
(07)	651
(08)	652
(09)	653
(0A)	654
(0B)	655
(0C)	656
(0D)	657
(0E)	658
(0F)	659
(10)	660

Other settings are prohibited by this International Standard.

27.3.6.3 Write strategy code

The write strategy code field indicates the optimum Write Strategy for the disk. The Write Strategy code field consists of 10 bytes of user data, located in Field ID2 and ID5, as shown in Table 17.

The first field of the Write Strategy code, located in Field ID2, shall indicate the basic parameters of the Write Strategy. The second field of the Write Strategy code, located in Field ID5 except the Pre-pit data frame number 12, shall indicate the adaptive parameters of the Write Strategy.

If the first byte in the Write Strategy code field in Figure 53 is set to (00), the other Write Strategy code fields are invalid and all of the bytes of these fields (i.e. the second byte of the Write Strategy code field to the ninth byte) shall be set to (00).

Regardless of the value of the first byte in the Write Strategy code field, the Pre-pit data frame number 12 shall indicate the Basic Write Strategy code, see 27.3.6.3.5.

--`,,```,,,,````-`-`,,`,,`,`,,`---
© ISO/IEC 2005 — All rights reserved
Copyright International Organization for Standardization
Reproduced by IHS under license with ISO
No reproduction or networking permitted without license from IHS
Not for Resale

Table 17 – Write Strategy code field

Field ID	Pre-pit data frame number	Content			
ID2	9	T_{top}			
	10	$3T_{dtp}$		$4T_{dtp}$	
	11	$5T_{dtp}$		$6T_{dtp}$ to $11T_{dtp}$ and $14T_{dtp}$	
	12	T_{mp}		Reserved	
ID5	7	$3 – 3T_{ld}$	$3 – 3T_{tr}$	$3 – 4T_{ld}$	$3 – 4T_{tr}$
	8	$3 – 5T_{ld}$	$3 – 5T_{tr}$	$4 – 3T_{ld}$	$4 – 3T_{tr}$
	9	$4 – 4T_{ld}$	$4 – 4T_{tr}$	$4 – 5T_{ld}$	$4 – 5T_{tr}$
	10	$5 – 3T_{ld}$	$5 – 3T_{tr}$	$5 – 4T_{ld}$	$5 – 4T_{tr}$
	11	$5 – 5T_{ld}$	$5 – 5T_{tr}$	Reserved	
	12	Basic Write Strategy code			

The Write Strategy code shall consist of 1 byte of T_{top} code, 4 bits of nT_{dtp} code, 4 bits of T_{tmp} code, 18 bits of m-nT_{ld} code and 18 bits of T_{tr} Code.

27.3.6.3.1 T_{top} field

This field shall specify the T_{top} code selected out of Table 18.

T_{top} is the reference top pulse width of the write pulse and shall be independent of the recording data length, see Annex M.

Table 18 – T_{top} code

T_{top} code	Top pulse width
(01)	0,70T
(02)	0,75T
(03)	0,80T
(04)	0,85T
(05)	0,90T
(06)	0,95T
(07)	1,00T
(08)	1,05T
(09)	1,10T
(0A)	1,15T
(0B)	1,20T
(0C)	1,25T
(0D)	1,30T
(0E)	1,35T
(0F)	1,40T
(10)	1,45T
(11)	1,50T
(12)	1,55T
(13)	1,60T
(14)	1,65T
(15)	1,70T

Other settings are prohibited by this International Standard.

© ISO/IEC 2005 – All rights reserved
Copyright International Organization for Standardization
Reproduced by IHS under license with ISO
No reproduction or networking permitted without license from IHS
Not for Resale

27.3.6.3.2 nT_{dtp} fields (n = 3 to 11 and 14)

These fields shall specify the $3T_{dtp}$, $4T_{dtp}$, $5T_{dtp}$ and ($6T_{dtp}$ to $11T_{dtp}$ and $14T_{dtp}$) code selected out of Table 19. nT_{dtp} is the difference of the top pulse width from Ttop when recording the nT data (n = 3 to 11 and 14), see Annex M. By using T_{top} and nT_{dtp} codes, the actual top pulse width (nT_{top}) are represented as follows.

$nT_{top} = T_{top} + nT_{dtp}$ (n = 3 to 1 and 14)

Table 19 – nT_{dtp} code

nT_{dtp} code	Difference from Top
0001	- 0,35T
0010	- 0,30T
0011	- 0,25T
0100	- 0,20T
0101	- 0,15T
0110	- 0,10T
0111	- 0,05T
1000	± 0,00T
1001	+ 0,05T
1010	+ 0,10T
1011	+ 0,15T
1100	+ 0,20T
1101	+ 0,25T
1110	+ 0,30T
1111	+ 0,35T

27.3.6.3.3 T_{mp} field

This field shall specify the T_{mp} code selected out of Table 20. T_{mp} is the multi-pulse width, see Annex M.

Table 20 – T_{mp} code

T_{mp} code	Multi-pulse width
0001	0,30T
0010	0,35T
0011	0,40T
0100	0,45T
0101	0,50T
0110	0,55T
0111	0,60T
1000	0,65T
1001	0,70T
1010	0,75T
1011	0,80T
1100	0,85T
1101	0,90T
1110	0,95T
1111	1,00T

© ISO/IEC 2005 — All rights reserved
Copyright International Organization for Standardization
Reproduced by IHS under license with ISO
No reproduction or networking permitted without license from IHS
Not for Resale

27.3.6.3.4 m-nT_{ld} and m-nT_{tr} fields (m = 3,4,5 and n = 3,4,5)

These fields shall specify T_{ld} code and T_{tr} code which are selected from Table 21 and Table 22 according to the combination of the preceding space length and the recording data length, see Annex M.

In the case that the preceding space length is mT and the recording data length is nT, T_{ld} shall be identified as m-nT_{ld} and T_{tr} shall be described as m-nT_{tr} (m = 3, 4, 5 and n = 3, 4, 5).

Where m or n are equal to 5, then the feature over 5T (5T to 11T and 14T) are indicated.

Table 21 – T_{ld} code

Code	T_{ld}
00	0,00T
01	0,05T
10	-0,05T
11	-0,10T

Table 22 – T_{tr} code

Code	T_{tr}
00	0,00T
01	0,05T
10	-0,05T
11	-0,10T

27.3.6.3.5 Basic Write Strategy code

This field shall specify the Basic Write Strategy code for the disk, as shown in Table 23.

See 14.3.

Table 23 – Basic Write Strategy code

Basic Write Strategy code	Parameter
(01)	Type 1
(02)	Type 2
(03)	Type 3

Other settings are prohibited by this International Standard.

27.3.7 Field ID3 and Field ID4

The Pre-pit data block configuration of Field ID3 and Field ID4 shall be as shown in Figures 55 and 56.

This International Standard does not specify the content of the 12 bytes designated as Manufacturer ID. Unless otherwise agreed to by the interchange parties, this content shall be ignored in interchange.

© ISO/IEC 2005 – All rights reserved

Copyright International Organization for Standardization
Reproduced by IHS under license with ISO
No reproduction or networking permitted without license from IHS
Not for Resale

Pre-pit data frame number	Bit position			
	0	1 to 4	5 (msb) to 12 (lsb)	
0	Pre-pit SYNC Code*	0000	First byte of ECC Block address	Part A
1		0001	Second byte of ECC Block address	
2		0010	Third byte of ECC Block address	
3		0011	First byte of Parity A	
4		0100	Second byte of Parity A	
5		0101	Third byte of Parity A	
6		0110	Field ID (03)	Part B
7		0111	First byte of Manufacturer ID	
8		1000	Second byte of Manufacturer ID	
9		1001	Third byte of Manufacturer ID	
10		1010	Fourth byte of Manufacturer ID	
11		1011	Fifth byte of Manufacturer ID	
12		1100	Sixth byte of Manufacturer ID	
13		1101	First byte of Parity B	
14		1110	Second byte of Parity B	
15		1111	Third byte of Parity B	

* The Pre-pit SYNC Code shall be added to the Pre-pit data block to construct the Pre-pit physical block

Figure 55 - Pre-pit data block configuration of Field ID3

Pre-pit data frame number	Bit position			
	0	1 to 4	5 (msb) to 12 (lsb)	
0	Pre-pit SYNC Code*	0000	First byte of ECC Block address	Part A
1		0001	Second byte of ECC Block address	
2		0010	Third byte of ECC Block address	
3		0011	First byte of Parity A	
4		0100	Second byte of Parity A	
5		0101	Third byte of Parity A	
6		0110	Field ID (04)	Part B
7		0111	Seventh byte of Manufacturer ID	
8		1000	Eighth byte of Manufacturer ID	
9		1001	Ninth byte of Manufacturer ID	
10		1010	Tenth byte of Manufacturer ID	
11		1011	Eleventh byte of Manufacturer ID	
12		1100	Twelfth byte of Manufacturer ID	
13		1101	First byte of Parity B	
14		1110	Second byte of Parity B	
15		1111	Third byte of Parity B	

* The Pre-pit SYNC Code shall be added to the Pre-pit data block to construct the Pre-pit physical block

Figure 56 - Pre-pit data block configuration of Field ID4

--`,,```,,,,````-`-`,,`,,`,`,,`---

Copyright International Organization for Standardization
Reproduced by IHS under license with ISO
No reproduction or networking permitted without license from IHS
© ISO/IEC 2005 — All rights reserved
Not for Resale

28 Data structure of R-Information Zone

28.1 Layout of Power Calibration Area and Recording Management Area

The Power Calibration Area and Recording Management Area shown in Figure 57 are located in front of the Lead-in Zone.

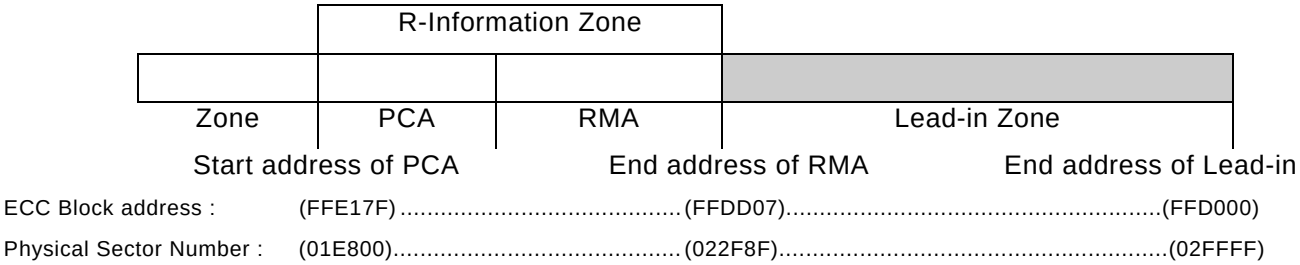

Figure 57 - Address layout of the R-Information Zone

28.2 Structure of the Power Calibration Area

The Power Calibration Area shall be located from ECC Block address (FFE17F) to (FFDFC5).

The minimum segment for a power calibration shall be one Pre-pit physical sector and is referred to as a power calibration sector. The power calibration process shall be performed continuously from the start to the end of the power calibration sector.

It is recommended that signal with enough readout amplitude should be recorded at the innermost used sector on each power calibration process to find out the boundary with unused area easily. The signal should have a length of at least 4 consecutive Sync Frames of power calibration sector and at least 0,5 of Modulation amplitude (I_{14}/I_{14H}) or equivalent. See Figure 10. This signal should be recorded at the innermost used sector, and at least once in every 32 consecutive sectors.

The power Calibration Area shall be constructed with 7 088 power calibration sectors.

The structure of the Power Calibration Area is shown in Figure 58.

This International Standard does not specify the power calibration process in the PCA for disk manufacturers, but it is recommended that at least 8 ECC Blocks in this area should be kept unrecorded to make the recording of the first RMD stable.

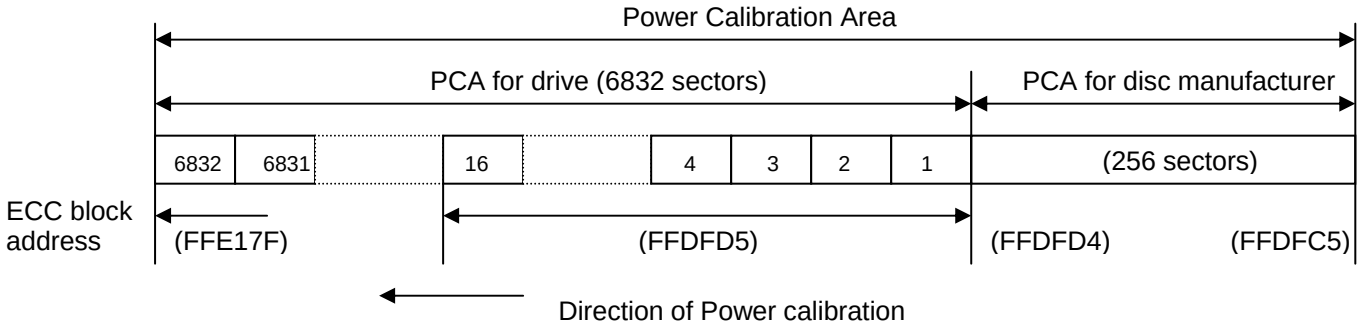

Figure 58 - Structure of the Power Calibration Area

© ISO/IEC 2005 – All rights reserved
Copyright International Organization for Standardization
Reproduced by IHS under license with ISO
No reproduction or networking permitted without license from IHS
Not for Resale

28.3 Data configuration of the Recording Management Area (RMA)

28.3.1 Sector format of the Recording Management Area

The Recording Management Area shall be located from ECC block address (FFDFC3) to (FFDD07), see Figure 59.

The RMA shall be constructed with a RMA Lead-in and Recording Management Data (RMD).

The size in bytes of the RMA Lead-in is 32 768 bytes and is constructed with the System Reserved Field of size 16 384 bytes and the Unique Identifier (ID) Field of size 16 384 bytes.

The data in the System Reserved Field shall be set to (00).

The Unique ID Field shall be constructed with eight units which have the same 2 048 bytes size and contents. The byte assignment of each unit shall be as shown in Table 24.

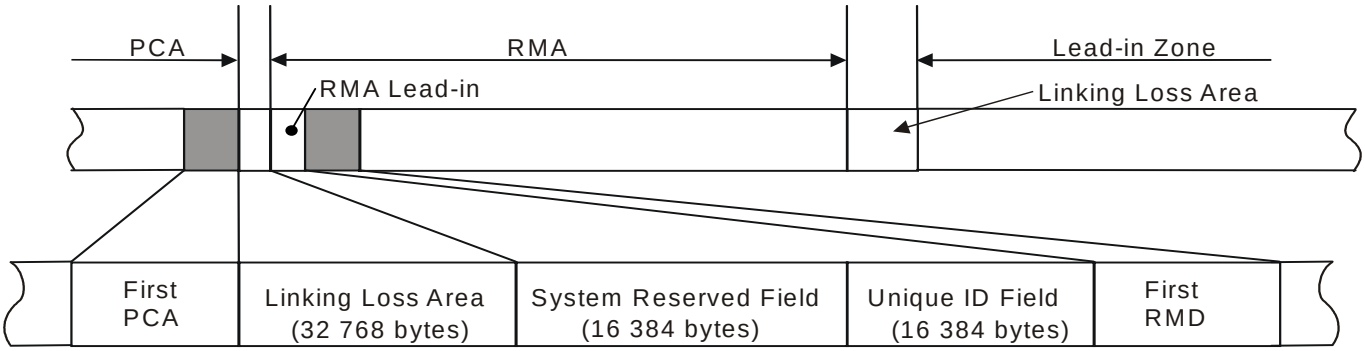

Figure 59 - Layout of the Recording Management Area

Table 24 – Contents of Unique ID Field

BP	Content
0 to 31	Drive manufacturer ID
32 to 39	Set to (00)
40 to 55	Serial Number
56 to 63	Set to (00)
64 to 79	Model Number
80 to 87	Set to (00)
88 to 105	Drive manufacturer ID
106 to 2 047	Set to (00)

Byte 0 to byte 31 – Drive manufacturer ID

This International Standard does not specify the content of these 32 bytes. Unless otherwise agreed to by the interchange parties, this content shall be ignored in interchange.

© ISO/IEC 2005 — All rights reserved
Copyright International Organization for Standardization
Reproduced by IHS under license with ISO
No reproduction or networking permitted without license from IHS
Not for Resale

Byte 32 to byte 39

These bytes shall be set to (00).

Byte 40 to byte 55 - Serial number

This International Standard does not specify the content of these 16 bytes. Unless otherwise agreed to by the interchange parties, this content shall be ignored in interchange.

Byte 56 to byte 63

These bytes shall be set to (00).

Byte 64 to byte 79 - Model number

This International Standard does not specify the content of these 16 bytes. Unless otherwise agreed to by the interchange parties, this content shall be ignored in interchange.

Byte 80 to byte 87

These bytes shall be set to (00).

Byte 88 to byte 105 - Drive manufacturer ID

This International Standard does not specify the content of these 18 bytes. Unless otherwise agreed to by the interchange parties, this content shall be ignored in interchange.

Byte 106 to byte 2 047

These bytes shall be set to (00).

28.3.2 Recording Management Data (RMD)

Recording Management Data (RMD) shall contain the information about the recordings on the disk. The size of the RMD shall be 32 768 bytes. The data structure of the RMD shall be as shown in Table 25.

© ISO/IEC 2005 – All rights reserved

Copyright International Organization for Standardization
Reproduced by IHS under license with ISO
No reproduction or networking permitted without license from IHS
Not for Resale

Table 25 – Data structure of the Recording Management Data

Sector Number	Field
Sector 0	Linking Loss Area
Sector 1	RMD Field0
Sector 2	RMD Field1
Sector 3	RMD Field2
Sector 4	RMD Field3
Sector 5	RMD Field4
Sector 6	RMD Field5
Sector 7	RMD Field6
Sector 8	RMD Field7
Sector 9	RMD Field8
Sector 10	RMD Field9
Sector 11	RMD Field10
Sector 12	RMD Field11
Sector 13	RMD Field12
Sector 14	RMD Field13
Sector 15	RMD Field14

Each RMD field shall be 2 048 bytes of Main Data and shall be recorded through the signal processing according to Section 4.

In order to record RMD incrementally, 2K-Link shall be selected. See clause 23.

28.3.2.1 RMD Field0

RMD Field0 shall specify general information of the disk and the contents of this field shall be as specified in Table 26.

Table 26 – RMD Field0

BP	Contents	Number of bytes
0 and 1	RMD format	2
2	Disk status	1
3	Set to (00)	1
4 to 21	Drive manufacturer ID	18
22 to 85	Copy of Pre-pit Information	64
86 to 2047	Set to (00)	42

Bytes 0 and 1 - RMD format

These bytes shall be set to (0001).

Byte 2 - Disk status

This field shall specify the disk status as follows.

If set to (00), they specify that the disk is empty.

© ISO/IEC 2005 — All rights reserved
Copyright International Organization for Standardization
Reproduced by IHS under license with ISO
No reproduction or networking permitted without license from IHS
Not for Resale

If set to (01), they specify that the disk is in Disk at once recording mode.

If set to (02), they specify that the disk is in Incremental recording mode.

If set to (03), they specify that the disk is a finalized disk in the case of Incremental recording.

Other settings are prohibited by this International Standard.

Byte 3

This byte shall be set to (00).

Byte 4 to byte 21- Drive manufacturer ID

This International Standard does not specify the content of these 18 bytes. Unless otherwise agreed to by the interchange parties, this content shall be ignored in interchange.

Byte 22 to byte 85 - Copy of Pre-pit Information

The copy of Pre-pit Information that is specified in 27.3 shall be recorded in this field. The recording format shall be as shown in Table 27.

Table 27 – Copy of Pre-pit Information

BP	Contents	
22	Field ID set to (01)	
23	Application code	
24	Disk physical code	
25 to 27	Last address of Data Recordable Zone (see 27.3.5.3)	
28	Part Version	Extension code
29	Set to (00)	
30	Field ID set to (02)	
31	OPC suggested code (β value)	OPC suggested code (Recording Power)
32	Wavelength code	
33 to 36	1st field of Write strategy code	
37	Set to (00)	
38	Field ID set to (03)	
39 to 44	1st field of Manufacturer ID	
45	Set to (00)	
46	Field ID set to (04)	
47 to 52	2nd field of Manufacturer ID	
53	Set to (00)	
54	Field ID set to (05)	
55 to 60	2nd field of Write strategy code	
61 to 85	Set to (00)	

Byte 86 to byte 2047

These bytes shall be set to (00).

© ISO/IEC 2005 – All rights reserved

Copyright International Organization for Standardization
Reproduced by IHS under license with ISO
No reproduction or networking permitted without license from IHS
Not for Resale

28.3.2.2 RMD Field1

RMD Field1 shall contain OPC related information. In RMD Field1 it is possible to record OPC related information for up to 4 drives that may coexist in a system. See Table 28.

In the case of a single drive system, OPC related information shall be recorded in field No.1 and the other fields shall be set to (00). In every case, the unused fields of RMD Field1 shall be set to (00).

--`,,```,,,,````-`-`,,`,,`,`,,`---

© ISO/IEC 2005 — All rights reserved
Copyright International Organization for Standardization
Reproduced by IHS under license with ISO
No reproduction or networking permitted without license from IHS
Not for Resale

Table 28 –RMD Field1

BP	Contents		Number of bytes
0 to 31	No. 1	Drive manufacturer ID	32
32 to 47		Serial number	16
48 to 63		Model number	16
64 to 67		1st field of Write Strategy code	4
68 to 71		Recording power	4
72 to 79		Time stamp	8
80 to 83		Power calibration address	4
84 to 107		Running OPC information	24
108 to 113		2nd field of Write Strategy code	6
114 to 115		DSV	2
116 to 127		Set to (00)	12
128 to 159	No.2	Drive manufacturer ID	32
160 to 175		Serial number	16
176 to 191		Model number	16
192 to 195		1st field of Write Strategy code	4
196 to 199		Recording power	4
200 to 207		Time stamp	8
208 to 211		Power calibration address	4
212 to 235		Running OPC information	24
236 to 241		2nd field of Write Strategy code	6
242 to 243		DSV	2
244 to 255		Set to (00)	12
256 to 287	No.3	Drive manufacturer ID	32
288 to 303		Serial number	16
304 to 319		Model number	16
320 to 323		1st field of Write Strategy code	4
324 to 327		Recording power	4
328 to 335		Time stamp	8
336 to 339		Power calibration address	4
340 to 363		Running OPC information	24
364 to 369		2nd field of Write Strategy code	6
370 to 371		DSV	2
372 to 383		Set to (00)	12
384 to 415	No.4	Drive manufacturer ID	32
416 to 431		Serial number	16
432 to 447		Model number	16
448 to 451		1st field of Write Strategy code	4
452 to 455		Recording power	4
456 to 463		Time stamp	8
464 to 467		Power calibration address	4
468 to 491		Running OPC information	24
492 to 497		2nd field of Write Strategy code	6
498 to 499		DSV	2
500 to 511		Set to (00)	12
512 to 2047	Set to (00)		1 536

© ISO/IEC 2005 – All rights reserved

Copyright International Organization for Standardization
Reproduced by IHS under license with ISO
No reproduction or networking permitted without license from IHS
Not for Resale

Bytes 0 to 31, 128 to 159, 256 to 287, 384 to 415 – Drive manufacturer ID

This International Standard does not specify the content of these fields. Unless otherwise agreed to by the interchange parties, this content shall be ignored in interchange.

Bytes 32 to 47, 160 to 175, 288 to 303, 416 to 431 – Serial number

This International Standard does not specify the content of these fields. Unless otherwise agreed to by the interchange parties, this content shall be ignored in interchange.

Bytes 48 to 63, 176 to 191, 304 to 319, 432 to 447 – Model number

This International Standard does not specify the content of these fields. Unless otherwise agreed to by the interchange parties, this content shall be ignored in interchange.

Bytes 64 to 67, 192 to 195, 320 to 323, 448 to 451 – 1st field of Write Strategy code

These fields shall specify the basic parameters of the Write Strategy code in the Pre-pit data block of Field ID2. See clause 27.3.6.3.

Bytes 68 to 71, 196 to 199, 324 to 327, 452 to 455 – Recording power

This International Standard does not specify the content of these fields. Unless otherwise agreed to by the interchange parties, this content shall be ignored in interchange.

Bytes 72 to 79, 200 to 207, 328 to 335, 456 to 463 – Time stamp

This International Standard does not specify the content of these fields. Unless otherwise agreed to by the interchange parties, this content shall be ignored in interchange.

Bytes 80 to 83, 208 to 211, 336 to 339, 464 to 467 - Power calibration address

These fields shall specify the start ECC Block address of the PCA where the last power calibration was performed. If these fields are set to (00), they shall be ignored in interchange.

Bytes 84 to 107, 212 to 235, 340 to 363, 468 to 491 - Running OPC information

This International Standard does not specify the content of these fields. Unless otherwise agreed to by the interchange parties, this content shall be ignored in interchange.

Bytes 108 to 113, 236 to 241, 364 to 369, 492 to 497 – 2nd field of Write Strategy code

These fields shall specify the adaptive parameters of the Write Strategy code in the Pre-pit data block of Field ID5. See 27.3.6.3.

Bytes 114 to 115, 242 to 243, 370 to 371, 498 to 499

These fields shall specify the last DSV in binary notation when the Incremental recording mode is selected. If these fields are set to (00), they are invalid.

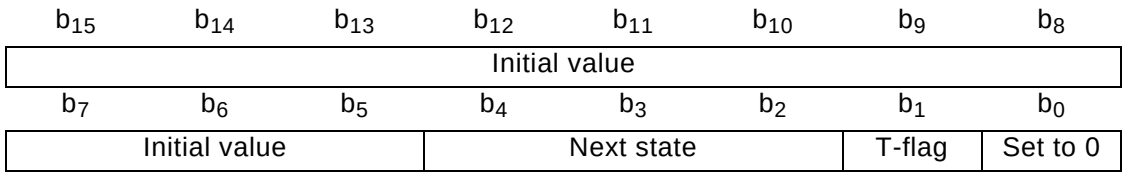

Figure 60 - DSV field

--`,,```,,,,````-`-`,,`,,`,`,,`---

© ISO/IEC 2005 — All rights reserved
Copyright International Organization for Standardization
Reproduced by IHS under license with ISO
No reproduction or networking permitted without license from IHS
Not for Resale

The first byte and bit b_7 to b_5 of the second byte shall be used to indicate the initial DSV of the next Incremental recording. This field represents ± 1023 at the maximum, using 11 bits. See clause 22. Bit b_4 to b_2 of the second byte shall be used to indicate the next state of the 16-bit Code word. This field represents 1 to 4 according to the specified state. See clause 21. Bit b_1 of the second byte shall be used to indicate the last bit value in the 16-bit Cord word (ONE or ZERO). ONE represents a space and ZERO represents a recorded mark.

The DSV shall be determined from the initial state of the second Sync frame in the Linking Sector of the previous recording.

Bytes 116 to 127, 244 to 255, 372 to 383, 500 to 511, 512 to 2 047

These bytes shall be set to (00).

28.3.2.3 RMD Field2

RMD Field2 may specify user specific data. If this field is not used, it shall be set to (00).

This International Standard does not specify the content of these bytes unless otherwise agreed to by the interchange parties, this content shall be ignored in interchange.

28.3.2.4 RMD Field3

If a Border-out is recorded, Border Zone information shall be recorded in RMD Field3 as shown in Table 29. These fields shall indicate the start sector number of the Border-out, unless they are set to (00).

If the RMD is recorded before the first Border closing or no Borders are recorded, all fields of RMD Field3 shall be set to (00).

Table 29 – RMD Field3

BP	Contents	Number of bytes
0 to 3	Start sector number of the Border-out Area No.1	4
4 to 7	Start sector number of the Border-out Area No.2	4
:	:	:
:	:	:
2 044 to 2 047	Start sector number of the Border-out Area No.n	4

Bytes 0 to 3, …, 2 044 to 2 047 - Start sector number of Border-out No.n
(n = 1, 2, …, 512)

These fields, unless they are set to (00), indicate the start sector number of the Border-out.

28.3.2.5 RMD Field4

RMD Field4 shall specify the information of RZone and the contents of this field shall be as specified in Table 30.

The portion of the Data Recordable Zone that is reserved for recording user data is called the RZone. The RZone shall be divided into 2 types depending on the recording conditions. In an Open RZone, the additional data can be appended. In a Complete RZone, no further user data can be appended. There shall not be more than two Open RZones in a Data Recordable Zone.

© ISO/IEC 2005 – All rights reserved

Copyright International Organization for Standardization
Reproduced by IHS under license with ISO
No reproduction or networking permitted without license from IHS
Not for Resale

The portion of the Data Recordable Zone that is not yet reserved for recording data is called the Invisible RZone. The zones for subsequent RZones can be reserved in the Invisible RZone.

If no further data can be appended, no Invisible RZone exists.

Table 30 – RMD Field4

BP	Contents	Number of bytes
0 and 1	Invisible RZone number	2
2 and 3	First Open RZone number	2
4 and 5	Second Open RZone number	2
6 to15	Set to (00)	10
16 to 19	Start sector number of RZone No.1	4
20 to 23	Last recorded address of RZone No.1	4
24 to 27	Start sector number of RZone No.2	4
28 to 31	Last recorded address of RZone No.2	4
:	:	:
:	:	:
2 040 to 2 043	Start sector number of RZone No.254	4
2 044 to 2 047	Last recorded address of RZone No.254	4

Bytes 0 and 1 - Invisible RZone number

This field shall specify the Invisible RZone number.

The Invisible RZone number shall be the total number of Invisible RZones, Open RZones and Complete RZones.

Bytes 2 and 3 - First Open RZone number

This field shall specify the first Open RZone number.

If there is no first Open RZone, this field shall be set to (00).

Bytes 4 and 5 - Second Open RZone number

This field shall specify the second Open RZone number. If there is no second Open RZone, this field shall be set to (00).

Bytes 6 to 15

These bytes shall be set to (00).

Bytes 16 to 19, 24 to 27,..., 2 040 to 2 043 - Start sector number of RZone No.n (n = 1, 2,..., 254)

These fields shall specify the start sector number of the RZone. If these fields are set to (00), there is no RZone for this RZone number.

Bytes 20 to 23, 28 to 31,... , 2 044 to 2 047 - Last recorded address of RZone No.n (n = 1, 2,... , 254)

These fields shall specify the last recorded sector number of the RZone. If these fields are set to (00), there is no RZone for this RZone number.

--`,,```,,,,````-`-`,,`,,`,`,,`---

© ISO/IEC 2005 — All rights reserved
Copyright International Organization for Standardization
Reproduced by IHS under license with ISO
No reproduction or networking permitted without license from IHS
Not for Resale

28.3.2.6 RMD Field5 to RMD Field12

RMD Field5 to RMD Field12 shall specify the information of the RZone and the contents of this field shall be as specified in Table 31.

If these fields are not used, they shall all be set to (00).

Table 31 – RMD Field5 to RMD Field12

BP	Contents	Number of bytes
0 to 3	Start sector number of the RZone No.n	4
4 to 7	Last recorded address of the RZone No.n	4
8 to 11	Start sector number of the RZone No.n+1	4
12 to 15	Last recorded address of the RZone No.n+1	4
: :	: :	: :
2 044 to 2 047	Last recorded address of the RZone No.n+255	4

Each No.n of RMD Field5 to RMD Field12 shall be as follows.

RMD Field5 : No.n = 255
RMD Field6 : No.n = 511
RMD Field7 : No.n = 767
RMD Field8 : No.n = 1 023
RMD Field9 : No.n = 1 279
RMD Field10 : No.n = 1 535
RMD Field11 : No.n = 1 791
RMD Field12 : No.n = 2 047

28.3.2.7 RMD Field13 and RMD Field14

RMD Field13 and RMD Field14 shall be set to (00).

© ISO/IEC 2005 – All rights reserved

Copyright International Organization for Standardization
Reproduced by IHS under license with ISO
No reproduction or networking permitted without license from IHS
Not for Resale

Annex A
(normative)

Measurement of the angular deviation α

The angular deviation is the angle α formed by an incident beam perpendicular to the Reference Plane P with the reflected beam. See Figure A.1.

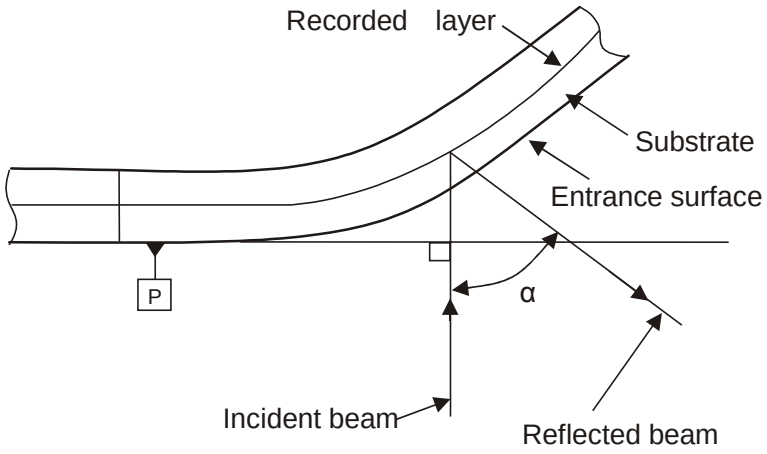

Figure A.1 - Angular deviation α

For measuring the angular deviation α, the disk shall be clamped between two concentric rings covering most of the Clamping Zone. The top clamping area shall have the same diameters as the bottom clamping area.

$$d_{in} = 22{,}3 \text{ mm} \begin{matrix} +\ 0{,}5 \text{ mm} \\ -\ 0{,}0 \text{ mm} \end{matrix}$$

$$d_{out} = 32{,}7 \text{ mm} \begin{matrix} +\ 0{,}0 \text{ mm} \\ -\ 0{,}5 \text{ mm} \end{matrix}$$

The total clamping force shall be $F_1 = 2{,}0 \text{ N} \pm 0{,}5 \text{ N}$. In order to prevent warping of the disk under the moment of force generated by the clamping force and the chucking force F_2 exerted on the rim of the centre hole of the disk, F_2 shall not exceed 0,5 N. See Figure A.2. This measurement shall be made under the conditions of 8.1.1.a).

Copyright International Organization for Standardization
Reproduced by IHS under license with ISO
No reproduction or networking permitted without license from IHS
© ISO/IEC 2005 — All rights reserved
Not for Resale

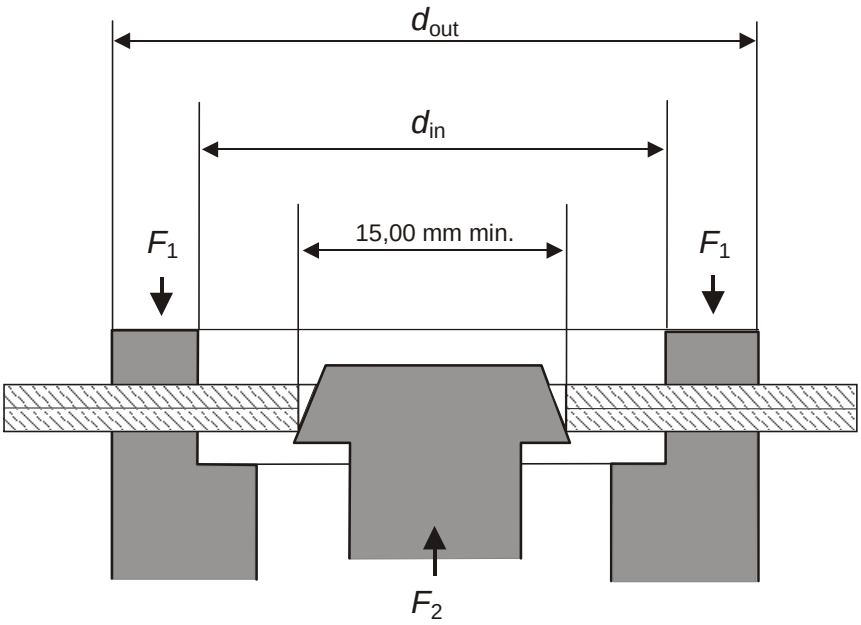

Figure A.2 - Clamping and chucking conditions

© ISO/IEC 2005 – All rights reserved
Copyright International Organization for Standardization
Reproduced by IHS under license with ISO
No reproduction or networking permitted without license from IHS
Not for Resale

Annex B
(normative)

Measurement of birefringence

B.1 Principle of the measurement

In order to measure the birefringence, circularly polarized light in a parallel beam is used. The phase retardation is measured by observing the ellipticity of the reflected light.

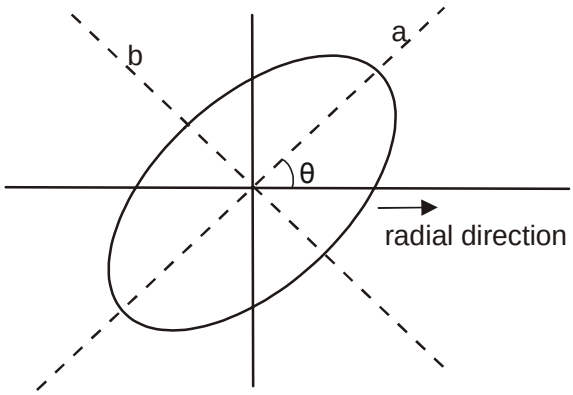

Figure B.1 - Ellipse with ellipticity e = b/a and orientation θ

The orientation θ of the ellipse is determined by the orientation of the optical axis

$$\theta = \gamma - \pi/4 \qquad \text{(I)}$$

where γ is the angle between the optical axis and the radial direction.

The ellipticity $e = b/a$ is a function of the phase retardation δ

$$e = \tan\left[\frac{1}{2}\left(\frac{\pi}{2} - \delta\right)\right] \qquad \text{(II)}$$

When the phase retardation δ is known the birefringence *BR* can be expressed as a fraction of the wavelength

$$BR = \frac{\lambda}{2\pi}\delta \quad \text{nm} \qquad \text{(III)}$$

Thus, by observing the elliptically polarized light reflected from the disk, the birefringence can be measured and the orientation of the optical axis can be assessed as well.

B.2 Measurements conditions

The measurement of the birefringence specified above shall be made under the following conditions.

Mode of measurement in reflection, double pass through the substrate

© ISO/IEC 2005 — All rights reserved
Copyright International Organization for Standardization
Reproduced by IHS under license with ISO
No reproduction or networking permitted without license from IHS
Not for Resale

Wavelength λ of the laser light	640 nm ± 15 nm
Beam diameter (FWHM)	1,0 mm ± 0,2 mm
Angle β of incidence in radial direction relative to the radial plane perpendicular to Reference Plane P	7,0° ± 0,2°
Clamping and chucking conditions	as specified by Annex A
Disk mounting	horizontally
Rotation	less than 1 Hz
Temperature and relative humidity	as specified in 8.1.1b)

B.3 Example of a measuring set-up

Whilst this International Standard does not prescribe a specific device for measuring birefringence, the device shown schematically in Figure B.2 as an example, is well suited for this measurement.

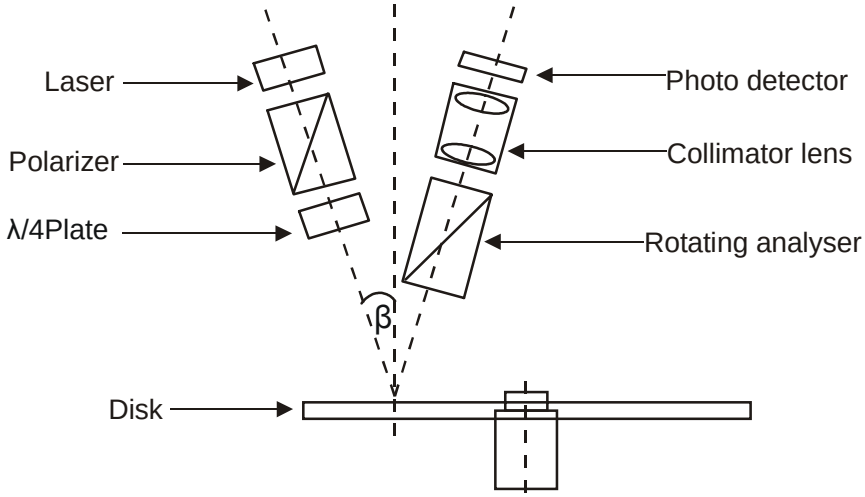

Figure B.2 - Example of a device for the measurement of birefringence

Light from a laser source, collimated into a polarizer (extinction ratio ≈ 10^{-5}), is made circular by a λ/4 plate. The ellipticity of the reflected light is analyzed by a rotating analyzer and a photo detector. For every location on the disk, the minimum and the maximum values of the intensity are measured. The ellipticity can then be calculated as

$$e^2 = I_{min} / I_{max} \qquad \text{(IV)}$$

Combining equations II, III and IV yields

$$BR = \frac{\lambda}{4} - \frac{\lambda}{\pi} \arctan \sqrt{\frac{I_{min}}{I_{max}}}$$

© ISO/IEC 2005 – All rights reserved
Copyright International Organization for Standardization
Reproduced by IHS under license with ISO
No reproduction or networking permitted without license from IHS
Not for Resale

This device can be easily calibrated as follows

- I_{min} is set to 0 by measuring a polarizer or a $\lambda/4$ plate,
- $I_{min} = I_{max}$ when measuring a mirror

Apart of the d.c. contribution of the front surface reflection, a.c. components may occur, due to the interference of the reflection(s) of the front surface with the reflection(s) from the recorded layer. These a.c. reflectance effects are significant only if the disk substrate has an extremely accurate flatness and if the light source has a high coherence.

© ISO/IEC 2005 — All rights reserved
Copyright International Organization for Standardization
Reproduced by IHS under license with ISO
No reproduction or networking permitted without license from IHS
Not for Resale

Annex C
(normative)

Measurement of the differential phase tracking error

C.1 Measuring method for the differential phase tracking error

The reference circuit for the measurement of the tracking error shall be that shown in Figure C.1. Each output of the diagonal pairs of elements of the quadrant photo detector shall be digitized independently after equalization of the waveform defined by

$$H(s) = (1 + 1{,}6 \times 10^{-7}\ i\omega) / (1 + 4{,}7 \times 10^{-8}\ i\omega)$$

The gain of the comparators shall be sufficient to reach full saturation on the outputs, even with minimum signal amplitudes. Phases of the digitized pulse signal edges (signals B_1 and B_2) shall be compared to each other to produce a time-lead signal C_1 and a time-lag signal C_2. The phase comparator shall react to each individual edge with signal C_1 or C_2, depending on the sign of Δt_i. A tracking error signal shall be produced by smoothing the C_1, C_2 signals with low-pass filters and by subtracting by means of a unity gain differential amplifier. The low-pass filters shall be 1st order filters with a cut-off frequency of (-3 dB) 30 kHz.

Special attention shall be given to the implementation of the circuit because very small time differences have to be measured, indeed 1 % of T equals only 0,38 ns. Careful averaging is needed.

The average time difference between two signals from the diagonal pairs of elements of the quadrant detector shall be

$$\overline{\Delta t} = 1/N \sum \Delta t_i$$

where N is the number of edges both rising and falling.

C.2 Measurement of $\overline{\Delta t}$ /T without time interval analyzer

The relative time difference $\overline{\Delta t}$ /T is represented by the amplitude of the tracking error signal provided that the amplitudes of the C_1 and C_2 signals and the frequency component of the read-out signals are normalized. The relation between the tracking error amplitude $\overline{\Delta TVE}$ and the time difference is given by

$$\overline{\Delta TVE} = \frac{\sum \Delta t_i}{\sum T_i} \mathrm{Vpc} = \frac{\sum \Delta t_i}{N n \mathrm{T}} \mathrm{Vpc} = \frac{\overline{\Delta t}}{\mathrm{T}} \times \frac{\mathrm{Vpc}}{\mathrm{n}}$$

where

Vpc is the amplitude of the C_1 and C_2 signals

T_i is the actual length of the read-out signal in the range 3T to 14T

nT is the weighted average value of the actual lengths

$N\ n$ T is the total averaging time

Assuming that Vpc equals ≈ 5 V and that the measured value of n equals ≈ 5, then the above relation between the tracking error amplitude $\overline{\Delta TVE}$ and the time difference $\overline{\Delta t}$ can be simplified to

$$\overline{\Delta TVE} = \overline{\Delta t} / \mathrm{T}$$

© ISO/IEC 2005 – All rights reserved
Copyright International Organization for Standardization
Reproduced by IHS under license with ISO
No reproduction or networking permitted without license from IHS
Not for Resale

The specification for the tracking gain can now be rewritten by using the tracking error amplitude as follows

$$0{,}5\ (\text{Vpc/n}) \leq \overline{\Delta TVE} \leq 1{,}1\ (\text{Vpc/n})$$

at 0,1 μm radial offset.

C.3 Calibration of $\overline{\Delta t}$ /T

As the gain of the phase comparator tends to vary, special attention shall be given to the calibration of the gain of the phase comparator. The following check and calibration method shall be applied for the measurement of the DPD tracking error signal.

a) Checking the measurement circuit

   a.1) Measure the relation between the amplitude of the first comparator input (3T) and the amplitude of the tracking error signal.

   a.2) Check the current gain of the amplifier, using the saturation area (see Figure C.2).

b) Determination of the calibration factor K

   b.1) Generate two sinusoidal signals A1 and A2 of frequency 2,616 MHz (corresponding to 5T) with phase difference, and feed them into two equalizer circuits.

   b.2) Measure the relation between $\overline{\Delta t}$/T and $\overline{\Delta TVE}$ / Vpc.

($\overline{\Delta TVE}$ / Vpc) K = ($\overline{\Delta t}$ / T) / *n*

K = (0,2 $\overline{\Delta t}$ /T) / ($\overline{\Delta TVE}$ / Vpc)

for *n* = 5

The relation between $\overline{\Delta t}$ /T and $\overline{\Delta TVE}$ / Vpc is linear (see Figure C.3).

c) Compare the measured $\overline{\Delta t}$ /T with the calculated one

   c.1) Measure $\overline{\Delta t}$ /T using the method of C.1.

   c.2) Calculate $\overline{\Delta t}$ /T(real) as follows

$$\overline{\Delta t}\ /\text{T (real)} = \text{K} \times \overline{\Delta t}\ /\text{T (measured)}$$

© ISO/IEC 2005 — All rights reserved
Copyright International Organization for Standardization
Reproduced by IHS under license with ISO
No reproduction or networking permitted without license from IHS
Not for Resale

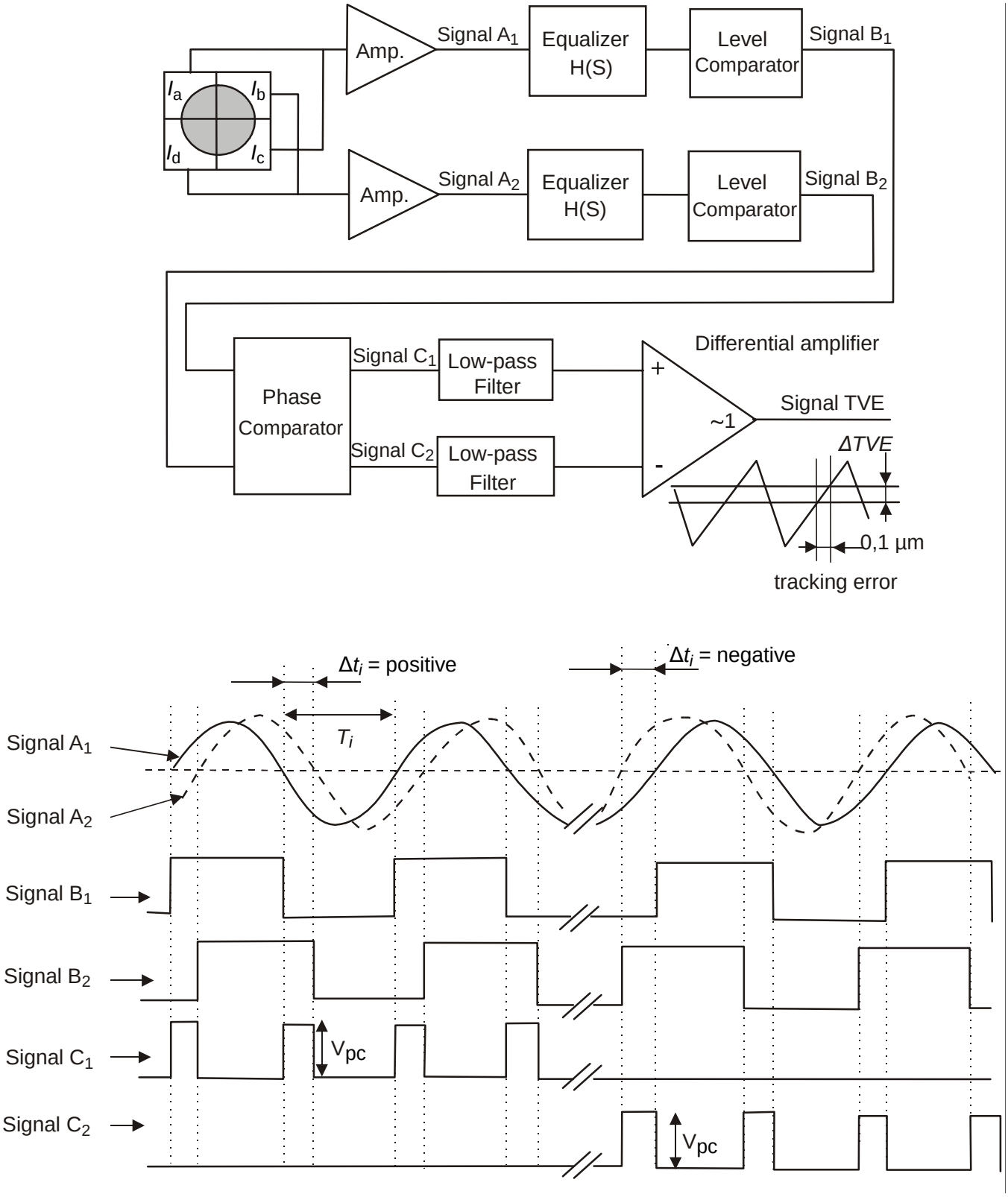

Figure C.1 - Circuit for tracking error measurements

© ISO/IEC 2005 All rights reserved
Copyright International Organization for Standardization
Reproduced by IHS under license with ISO
No reproduction or networking permitted without license from IHS
Not for Resale

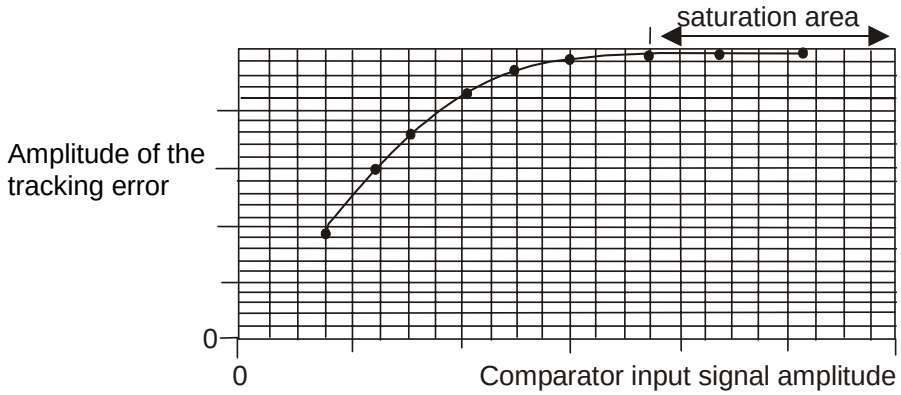

Figure C.2 - Comparator input signal amplitude vs. tracking error signal amplitude

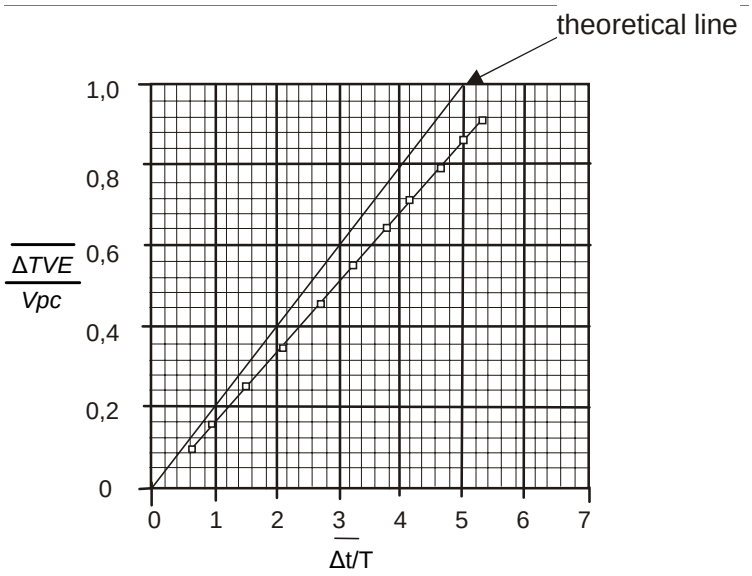

Figure C.3 - Δt /T vs. ΔTVE / Vpc

© ISO/IEC 2005 — All rights reserved
Copyright International Organization for Standardization
Reproduced by IHS under license with ISO
No reproduction or networking permitted without license from IHS
Not for Resale

Annex D
(normative)

Measurement of light reflectance

D.1 Calibration method

A good reference disk shall be chosen, for instance 0,6 mm glass disk with a golden reflective mirror. This reference disk shall be measured by a parallel beam as shown in Figure D.1.

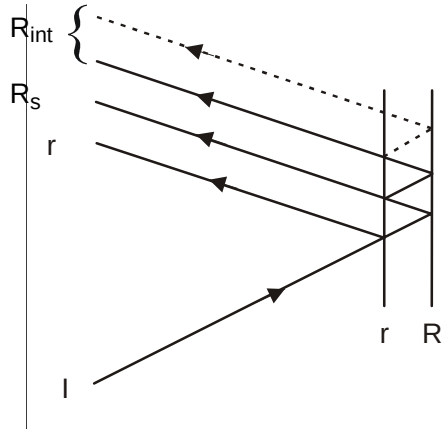

Figure D.1 - Reflectance calibration

In this Figure the following applies:

I = incident beam

r = reflectance of the entrance surface

R_s = main reflectance of the recorded layer

R_{int} = other reflectances of the entrance surface and of the recorded layer

$R_{//}$ = measured value, using the arrangement of Figure D.1

$R_{//} = r + R_s + R_{int}$

$r = ((n-1) / (n+1))^2$ where n is the refraction index of the substrate

$R_s = R_{//} - r - R_{int}$

$R_s = [(1-r)^2 \times (R_{//} - r)] / [1-r \times (2 - R_{//})]$

© ISO/IEC 2005 – All rights reserved
Copyright International Organization for Standardization
Reproduced by IHS under license with ISO
No reproduction or networking permitted without license from IHS
Not for Resale

The reference disk shall be measured on a reference drive and I_{mirror} measured by the focused beam is equated to R_S as determined above.

Now the arrangement is calibrated and the focused reflectivity is a linear function of the reflectivity of the recorded layer, independently from the reflectivity of the entrance surface.

D.2 Measuring method

The measuring method comprises the following steps:

a) Measure the reflective light power D_S from the reference disk with calibrated reflectivity R_S

b) Measure I_{14H} in the Information Zone of the disk (see 13.3)

c) Calculate the reflectivity as follows:

$$R_{14H} = R_S \times \frac{I_{14H}}{D_S}$$

© ISO/IEC 2005 — All rights reserved
Copyright International Organization for Standardization
Reproduced by IHS under license with ISO
No reproduction or networking permitted without license from IHS
Not for Resale

Annex E
(normative)

Tapered cone for disk clamping

The device used for centring the disk for measurement shall be a cone with a taper angle $\beta = 40{,}0° \pm 0{,}5°$ (see Figure E.1).

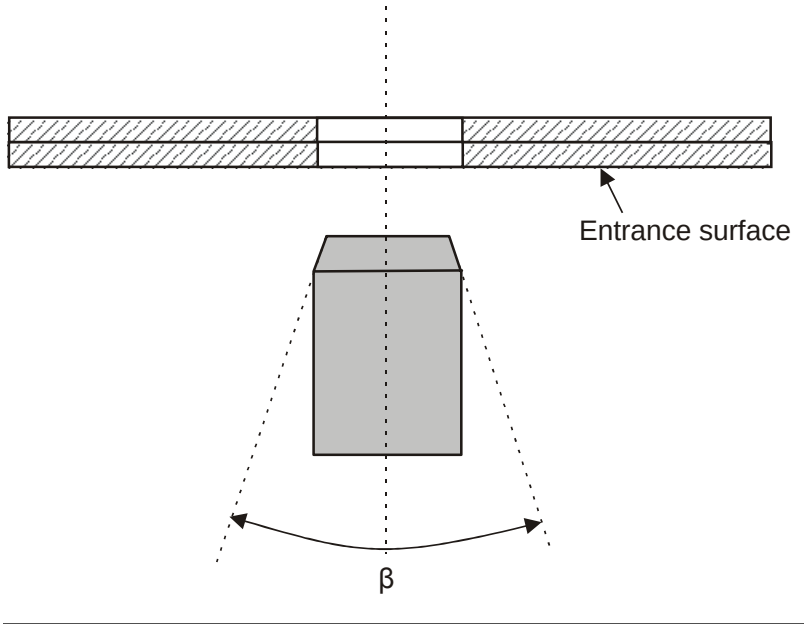

Figure E.1 - Tapered cone

© ISO/IEC 2005 – All rights reserved
Copyright International Organization for Standardization
Reproduced by IHS under license with ISO
No reproduction or networking permitted without license from IHS
Not for Resale

Annex F
(normative)

Measurement of jitter

Jitter shall be measured under the conditions of 9.1 with the additional conditions specified in this Annex.

F.1 System diagram for jitter measurement

The general system diagram for jitter measurement shall be as shown in Figure F.1.

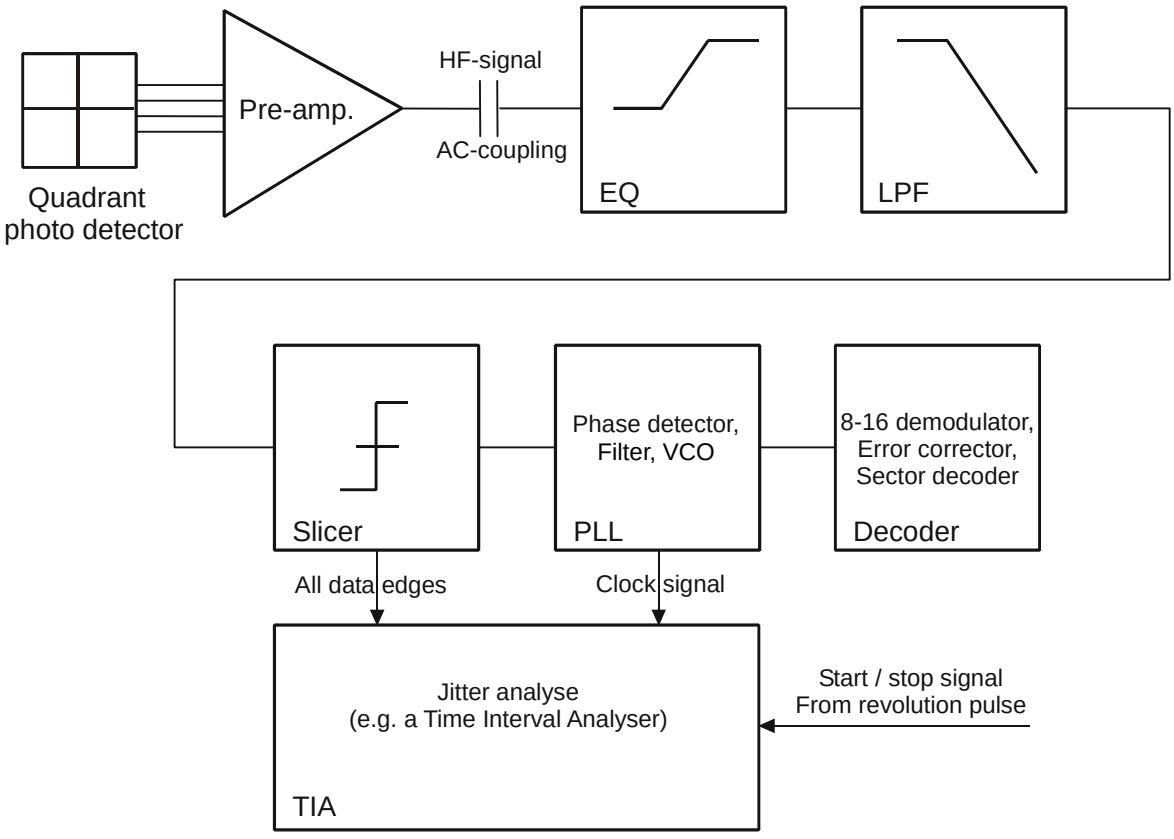

Figure F.1 - General diagram for jitter measurement

Copyright International Organization for Standardization
Reproduced by IHS under license with ISO
No reproduction or networking permitted without license from IHS
Not for Resale
© ISO/IEC 2005 — All rights reserved

F.2 Open loop transfer function for PLL

The open-loop transfer function for the PLL shown in Figure F.1 shall be as shown in Figure F.2.

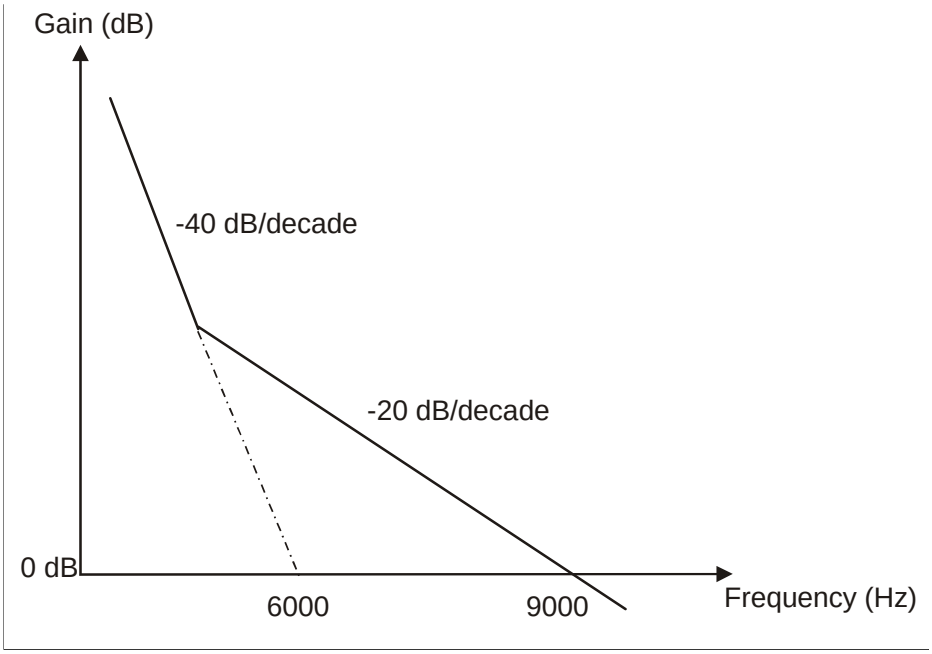

Figure F.2 - Schematic representation of the open-loop transfer function for PLL

F.3 Slicer

The slicer shall be a feed-back auto-slicer with a -3 dB closed-loop bandwidth of 5 kHz, 1st order integrating.

F.4 Conditions for measurement

The bandwidth of the pre-amplifier of the photo detector shall be greater than 20 MHz in order to prevent group-delay distortion. (See Figure F.3).

Low-pass filter: 6th order Bessel filter, f_c (-3 dB) = 8,2 MHz

Example of an analogue equalizer: 3-tap transversal filter with transfer function

$H(z) = 1{,}35\, z^{-2{,}093} - 0{,}175\,(1 + z^{-4{,}186})$

Filtering and equalization:

- Gain variation: 1 dB max. (below 7 MHz)
- Group delay variation: 3 ns max. (below 6,5 MHz)
- (Gain at 5,0 MHz - Gain at 0 Hz) = 3,2 dB $\pm$ 0,3 dB

a.c. coupling (high-pass filter) = 1st order, f_c (-3 dB) = 1 kHz

Correction of the angular deviation: only d.c. deviation.

© ISO/IEC 2005 – All rights reserved

Copyright International Organization for Standardization
Reproduced by IHS under license with ISO
No reproduction or networking permitted without license from IHS
Not for Resale

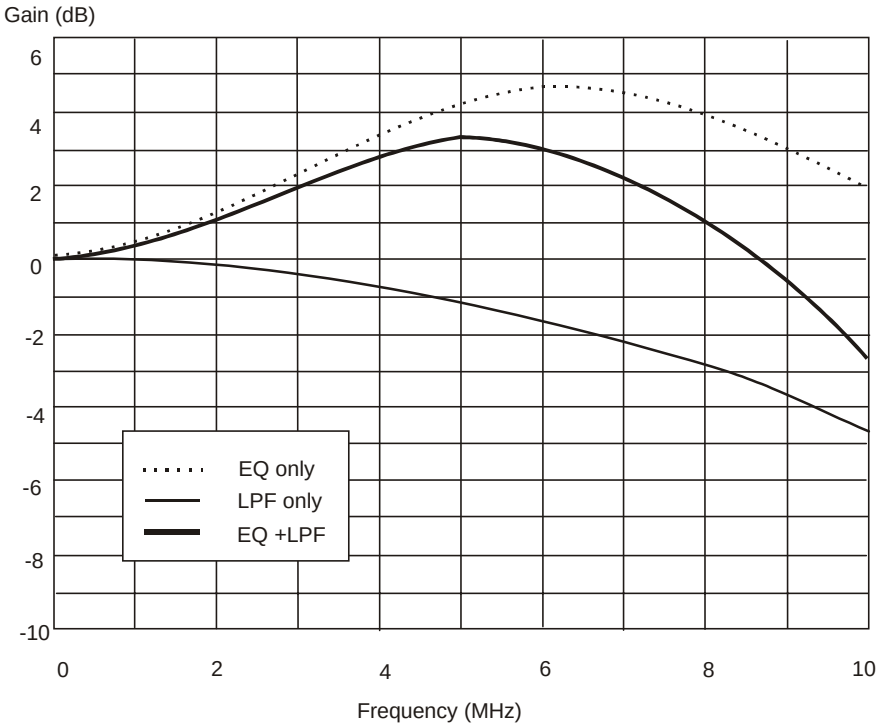

Figure F.3 - Frequency characteristics for the equalizer and the low-pass filter

F.5 Measurement

The jitter of all leading and trailing edges over one rotation shall be measured.

Under this measurement, the jitter shall be less than 8,0 % of the Channel bit clock period.

© ISO/IEC 2005 — All rights reserved
Copyright International Organization for Standardization
Reproduced by IHS under license with ISO
No reproduction or networking permitted without license from IHS
Not for Resale

Annex G
(normative)

8-to-16 Modulation with RLL (2,10) requirements

Tables G.1 and G.2 list the 16-bit Code Words into which the 8-bit coded Data bytes have to be transformed. Figure G.1 shows schematically how the Code Words and the associated State specification are generated.

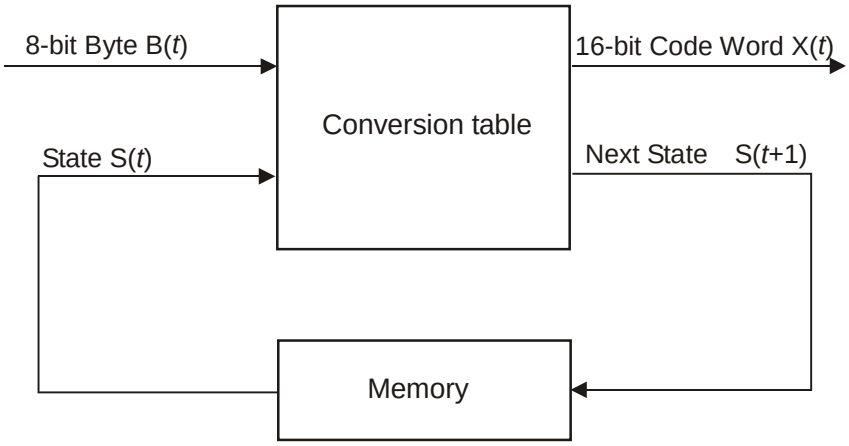

Figure G.1 - Code Words generation

In this Figure:

$X(t) = H\{B(t), S(t)\}$ $\quad X_{15}(t)$ = msb and $X_0(t)$ = lsb
$S(t+1) = G\{B(t), S(t)\}$
H is the output function
G is the next-state function

The Code Words leaving the States shall be chosen so that the concatenation of Code Words entering a State and those leaving that State satisfy the requirement that between two ONEs there shall be at least 2 and at most 10 ZEROs.

As additional requirements:

- Code Words leaving State 2 shall have both bit x_{15} and bit x_3 set to ZERO, and
- in Code Words leaving State 3 bit x_{15} or bit x_3 or both shall be set to ONE.

This means that the Code Word sets of States 2 and 3 are disjoint.

--`,,```,,,,````-`-`,,`,,`,`,,`---
© ISO/IEC 2005 – All rights reserved
Copyright International Organization for Standardization
Reproduced by IHS under license with ISO
No reproduction or networking permitted without license from IHS
Not for Resale

Code Word X(t)	Next State S(t+1)	Code Word X(t+1)
Ends with 1 or no trailing ZERO	State 1	Starts with 2 or up to 9 leading ZEROs
Ends with 2 or up to 5 trailing ZEROs	State 2	Starts with 1 or up to 5 leading ZEROs, and X_{15} (t+1),X_3 (t+1) = 0,0
Ends with 2 or up to 5 trailing ZEROs	State 3	Starts with none or up to 5 leading ZEROs, and X_{15} (t+1),X_3 (t+1) ≠ 0,0
Ends with 6 or up to 9 trailing ZEROs	State 4	Starts with 1 or no leading ZERO

Figure G.2 - Determination of States

Note that when decoding the recorded data, knowledge about the encoder is required to be able to reconstitute the original main Data.

$$B(t) = H^{-1} \{X(t), S(t)\}$$

Because of the involved error propagation, such state-dependent decoding is to be avoided. In the case of this 8-to-16 modulation, the conversion Tables have been chosen in such a way that knowledge about the State is not required in most cases. As can be gathered from the Tables, in some cases, two 8-bit bytes, for instance the 8-bit bytes 5 and 6 in States 1 and 2 in Table G.1, generate the same 16-bit Code Words. The construction of the Tables allows to solve this apparent ambiguity. Indeed, if two identical Code Words leave a State, one of them goes to State 2 and the other to State 3. Because the setting of bits X_{15} and X_3 is always different in these two States, any Code Word can be uniquely decoded by analysing the Code Word itself together with bits X_{15} and X_3 of the next Code Word:

$$B(t) = H^{-1} \{ X(t), X_{15} (t+1), X_3 (t+1) \}$$

In the Tables, the 8-bit bytes are identified by their decimal value.

© ISO/IEC 2005 — All rights reserved
Copyright International Organization for Standardization
Reproduced by IHS under license with ISO
No reproduction or networking permitted without license from IHS
Not for Resale

Table G.1 – Main Conversion Table

8-bit	State 1		State 2		State 3		State 4	
byte	Code Word	Next	Code Word	Next	Code Word	Next	Code Word	Next
	msb lsb	State	msb lsb	State	msb lsb	State	msb lsb	State
0	0010000000001001	1	0100000100100000	2	0010000000001001	1	0100000100100000	2
1	0010000000010010	1	0010000000010010	1	1000000100100000	3	1000000100100000	3
2	0010000100100000	2	0010000100100000	2	1000000000010010	1	1000000000010010	1
3	0010000001001000	2	0100010010000000	4	0010000001001000	2	0100010010000000	4
4	0010000010010000	2	0010000010010000	2	1000000100100000	2	1000000100100000	2
5	0010000000100100	2	0010000000100100	2	1001001000000000	4	1001001000000000	4
6	0010000000100100	3	0010000000100100	3	1000100100000000	4	1000100100000000	4
7	0010000001001000	3	0100000000010010	1	0010000001001000	3	0100000000010010	1
8	0010000010010000	3	0010000010010000	3	1000010010000000	4	1000010010000000	4
9	0010000100100000	3	0010000100100000	3	1001001000000001	1	1001001000000001	1
10	0010010010000000	4	0010010010000000	4	1000100100000001	1	1000100100000001	1
11	0010001001000000	4	0010001001000000	4	1000000010010000	3	1000000010010000	3
12	0010010010000001	1	0010010010000001	1	1000000010010000	2	1000000010010000	2
13	0010001001000001	1	0010001001000001	1	1000010010000001	1	1000010010000001	1
14	0010000001001001	1	0100000000100100	3	0010000001001001	1	0100000000100100	3
15	0010000100100001	1	0010000100100001	1	1000001001000001	1	1000001001000001	1
16	0010000010010001	1	0010000010010001	1	1000000100100001	1	1000000100100001	1
17	0010000000100010	1	0010000000100010	1	1000001001000000	4	1000001001000000	4
18	0001000000001001	1	0100000010010000	2	0001000000001001	1	0100000010010000	2
19	0010000000010001	1	0010000000010001	1	1001000100000000	4	1001000100000000	4
20	0001000000010010	1	0001000000010010	1	1000100010000000	4	1000100010000000	4
21	0000100000000010	1	0000100000000010	1	1000000010010001	1	1000000010010001	1
22	0000010000000001	1	0000010000000001	1	1000000001001001	1	1000000001001001	1
23	0010001000100000	2	0010001000100000	2	1000000001001000	2	1000000001001000	2
24	0010000100010000	2	0010000100010000	2	1000000001001000	3	1000000001001000	3
25	0010000010001000	2	0100000000100100	2	0010000010001000	2	0100000000100100	2
26	0010000001000100	2	0010000001000100	2	1000000000100010	1	1000000000100010	1
27	0001000100100000	2	0001000100100000	2	1000000000010001	1	1000000000010001	1
28	0010000000001000	2	0100000010010000	3	0010000000001000	2	0100000010010000	3
29	0001000010010000	2	0001000010010000	2	1001001000000010	1	1001001000000010	1
30	0001000001001000	2	0100000100100000	3	0001000001001000	2	0100000100100000	3
31	0001000000100100	2	0001000000100100	2	1001000100000001	1	1001000100000001	1
32	0001000000000100	2	0001000000000100	2	1000100100000010	1	1000100100000010	1
33	0001000000000100	3	0001000000000100	3	1000100010000001	1	1000100010000001	1
34	0001000000100100	3	0001000000100100	3	1000000000100100	2	1000000000100100	2
35	0001000001001000	3	0100001001000000	4	0001000001001000	3	0100001001000000	4
36	0001000010010000	3	0001000010010000	3	1000000000100100	3	1000000000100100	3
37	0001000100100000	3	0001000100100000	3	1000010001000000	4	1000010001000000	4
38	0010000000001000	3	0100100100000001	1	0010000000001000	3	0100100100000001	1
39	0010000001000100	3	0010000001000100	3	1001000010000000	4	1001000010000000	4
40	0010000010001000	3	0100010010000001	1	0010000010001000	3	0100010010000001	1
41	0010000100010000	3	0010000100010000	3	1000010010000010	1	1000010010000010	1
42	0010001000100000	3	0010001000100000	3	1000001000100000	2	1000001000100000	2
43	0010010001000000	4	0010010001000000	4	1000010001000001	1	1000010001000001	1
44	0001001001000000	4	0001001001000000	4	1000001000100000	3	1000001000100000	3
45	0000001000000001	1	0100010001000000	4	1000001001000010	1	0100010001000000	4

--`,,```,,,,````-`-`,,`,,`,`,,`---

© ISO/IEC 2005 – All rights reserved

Copyright International Organization for Standardization
Reproduced by IHS under license with ISO
No reproduction or networking permitted without license from IHS
Not for Resale

Table G.1 – Main Conversion Table (continued)

8-bit byte	State 1		State 2		State 3		State 4	
	Code Word msb lsb	Next State	Code Word msb lsb	Next State	Code Word msb lsb	Next State	Code Word msb lsb	Next State
46	0010010010000010	1	0010010010000010	1	1000001000100001	1	1000001000100001	1
47	0010000010001001	1	0100001001000001	1	0010000010001001	1	0100001001000001	1
48	0010010001000001	1	0010010001000001	1	1000000100010000	2	1000000100010000	2
49	0010001001000010	1	0010001001000010	1	1000000010001000	2	1000000010001000	2
50	0010001000100001	1	0010001000100001	1	1000000100010000	3	1000000100010000	3
51	0001000001001001	1	0100000100100001	1	0001000001001001	1	0100000100100001	1
52	0010000100100010	1	0010000100100010	1	1000000100100010	1	1000000100100010	1
53	0010000100010001	1	0010000100010001	1	1000000100010001	1	1000000100010001	1
54	0010000010010010	1	0010000010010010	1	1000000010010010	1	1000000010010010	1
55	0010000001000010	1	0010000001000010	1	1000000010001001	1	1000000010001001	1
56	0010000000100001	1	0010000000100001	1	1000000001000010	1	1000000001000010	1
57	0000100000001001	1	0100000010010001	1	0000100000001001	1	0100000010010001	1
58	0001001001000001	1	0001001001000001	1	1000000000100001	1	1000000000100001	1
59	0001000100100001	1	0001000100100001	1	0100000001001001	1	0100000001001001	1
60	0001000010010001	1	0001000010010001	1	1001001000010010	1	1001001000010010	1
61	0001000000100010	1	0001000000100010	1	1001001000001001	1	1001001000001001	1
62	0001000000010001	1	0001000000010001	1	1001000100000010	1	1001000100000010	1
63	0000100000010010	1	0000100000010010	1	1000000001000100	2	1000000001000100	2
64	0000010000000010	1	0000010000000010	1	0100000001001000	2	0100000001001000	2
65	0010010000100000	2	0010010000100000	2	1000010000100000	2	1000010000100000	2
66	0010001000010000	2	0010001000010000	2	1000001000010000	2	1000001000010000	2
67	0010000100001000	2	0100000000100010	1	0010000100001000	2	0100000000100010	1
68	0010000010000100	2	0010000010000100	2	1000000100001000	2	1000000100001000	2
69	0010000000010000	2	0010000000010000	2	1000000010000100	2	1000000010000100	2
70	0001000010001000	2	0100001000100000	2	0001000010001000	2	0100001000100000	2
71	0001001000100000	2	0001001000100000	2	0100000010001000	2	0100000010001000	2
72	0001000000001000	2	0100000100010000	2	0001000000001000	2	0100000100010000	2
73	0001000100010000	2	0001000100010000	2	1000000001000100	3	1000000001000100	3
74	0001000001000100	2	0001000001000100	2	0100000001001000	3	0100000001001000	3
75	0000100100100000	2	0000100100100000	2	1000010000100000	3	1000010000100000	3
76	0000100010010000	2	0000100010010000	2	1000001000010000	3	1000001000010000	3
77	0000100001001000	2	0100000001000100	2	0000100001001000	2	0100000001000100	2
78	0000100000100100	2	0000100000100100	2	1000000100001000	3	1000000100001000	3
79	0000100000000100	2	0000100000000100	2	1000000010000100	3	1000000010000100	3
80	0000100000000100	3	0000100000000100	3	0100000010001000	3	0100000010001000	3
81	0000100000100100	3	0000100000100100	3	1000100001000000	4	1000100001000000	4
82	0000100001001000	3	0100000001000100	3	0000100001001000	3	0100000001000100	3
83	0000100010010000	3	0000100010010000	3	1000000010001000	3	1000000010001000	3
84	0000100100100000	3	0000100100100000	3	1001001001001000	2	1001001001001000	2
85	0001000000001000	3	0100000100010000	3	0001000000001000	3	0100000100010000	3
86	0001000001000100	3	0001000001000100	3	1001001000100100	2	1001001000100100	2
87	0001000010001000	3	0100001000100000	3	0001000010001000	3	0100001000100000	3
88	0001000100010000	3	0001000100010000	3	1001001001001000	3	1001001001001000	3
89	0001001000100000	3	0001001000100000	3	1001000010000001	1	1001000010000001	1
90	0010000000010000	3	0010000000010000	3	1000100100010010	1	1000100100010010	1
91	0010000010000100	3	0010000010000100	3	1000100100001001	1	1000100100001001	1
92	0010000100001000	3	0100000000010001	1	0010000100001000	3	0100000000010001	1
93	0010001000010000	3	0010001000010000	3	1000100010000010	1	1000100010000010	1
94	0010010000100000	3	0010010000100000	3	1000100001000001	1	1000100001000001	1

© ISO/IEC 2005 — All rights reserved
Copyright International Organization for Standardization
Reproduced by IHS under license with ISO
No reproduction or networking permitted without license from IHS
Not for Resale

Table G.1 – Main Conversion Table (continued)

8-bit byte	State 1		State 2		State 3		State 4	
	Code Word msb lsb	Next State	Code Word msb lsb	Next State	Code Word msb lsb	Next State	Code Word msb lsb	Next State
95	0000001000000010	1	0100100100000010	1	1000010010010010	1	0100100100000010	1
96	0000000100000001	1	0100100010000001	1	1000010010001001	1	0100100010000001	1
97	0010010010001001	1	0100010000100000	2	0010010010001001	1	0100010000100000	2
98	0010010010010010	1	0010010010010010	1	1001001000000100	2	1001001000000100	2
99	0010010001000010	1	0010010001000010	1	1001001000100100	3	1001001000100100	3
100	0010010000100001	1	0010010000100001	1	1000010001000010	1	1000010001000010	1
101	0010001001001001	1	0100010010000010	1	0010001001001001	1	0100010010000010	1
102	0010001000100010	1	0010001000100010	1	1000010000100001	1	1000010000100001	1
103	0010001000010001	1	0010001000010001	1	1000001001001001	1	1000001001001001	1
104	0010000100010010	1	0010000100010010	1	1000001000100010	1	1000001000100010	1
105	0010000010000010	1	0010000010000010	1	1000001000010001	1	1000001000010001	1
106	0010000100001001	1	0100001000010000	2	0010000100001001	1	0100001000010000	2
107	0010000001000001	1	0010000001000001	1	1000000100010010	1	1000000100010010	1
108	0001001001000010	1	0001001001000010	1	1000000100001001	1	1000000100001001	1
109	0001001000100001	1	0001001000100001	1	1000000010000010	1	1000000010000010	1
110	0001000100100010	1	0001000100100010	1	1000000001000001	1	1000000001000001	1
111	0001000100010001	1	0001000100010001	1	0100000010001001	1	0100000010001001	1
112	0001000010010010	1	0001000010010010	1	1001001001001001	1	1001001001001001	1
113	0001000001000010	1	0001000001000010	1	1001001000100010	1	1001001000100010	1
114	0001000010001001	1	0100010000100000	3	0001000010001001	1	0100010000100000	3
115	0001000000100001	1	0001000000100001	1	1001001000010001	1	1001001000010001	1
116	0000100100100001	1	0000100100100001	1	1001000100010010	1	1001000100010010	1
117	0000100010010001	1	0000100010010001	1	1001000100001001	1	1001000100001001	1
118	0000100001001001	1	0100010001000001	1	0000100001001001	1	0100010001000001	1
119	0000100000100010	1	0000100000100010	1	1000100100100100	2	1000100100100100	2
120	0000100000010001	1	0000100000010001	1	1000100100000100	2	1000100100000100	2
121	0000010000001001	1	0100001001000010	1	0000010000001001	1	0100001001000010	1
122	0000010000010010	1	0000010000010010	1	1000100000100000	2	1000100000100000	2
123	0010010010000100	2	0010010010000100	2	1000010010000100	2	1000010010000100	2
124	0010010000010000	2	0010010000010000	2	1000010000010000	2	1000010000010000	2
125	0010001000001000	2	0100001000100001	1	0010001000001000	2	0100001000100001	1
126	0010001001000100	2	0010001001000100	2	1000001001000100	2	1000001001000100	2
127	0001000100001000	2	0100000100100010	1	0001000100001000	2	0100000100100010	1
128	0010000100100100	2	0010000100100100	2	1000001000001000	2	1000001000001000	2
129	0000100010001000	2	0100000100010001	1	0000100010001000	2	0100000100010001	1
130	0010000100000100	2	0010000100000100	2	1000000100100100	2	1000000100100100	2
131	0010000000100000	2	0010000000100000	2	1001001000000100	3	1001001000000100	3
132	0001001000010000	2	0001001000010000	2	1000100100100100	3	1000100100100100	3
133	0000100000001000	2	0100000010010010	1	0000100000001000	2	0100000010010010	1
134	0001000010000100	2	0001000010000100	2	1000100000100000	3	1000100000100000	3
135	0001000000010000	2	0001000000010000	2	1000010010000100	3	1000010010000100	3
136	0000100100010000	2	0000100100010000	2	1000010000010000	3	1000010000010000	3
137	0000100001000100	2	0000100001000100	2	1000001001000100	3	1000001001000100	3
138	0000010001001000	2	0100000001000010	1	0000010001001000	2	0100000001000010	1
139	0000010010010000	2	0000010010010000	2	1000001000001000	3	1000001000001000	3
140	0000010000100100	2	0000010000100100	2	1001000010000010	1	1001000010000010	1
141	0000010000000100	2	0000010000000100	2	1000000100000100	2	1000000100000100	2
142	0000010000000100	3	0000010000000100	3	1000000100100100	3	1000000100100100	3
143	0000010000100100	3	0000010000100100	3	1000000100000100	3	1000000100000100	3

© ISO/IEC 2005 – All rights reserved
Copyright International Organization for Standardization
Reproduced by IHS under license with ISO
No reproduction or networking permitted without license from IHS
Not for Resale

Table G.1 – Main Conversion Table (continued)

8-bit byte	State 1		State 2		State 3		State 4	
	Code Word msb lsb	Next State	Code Word msb lsb	Next State	Code Word msb lsb	Next State	Code Word msb lsb	Next State
144	0000010001001000	3	0100000010000100	2	0000010001001000	3	0100000010000100	2
145	0000010010010000	3	0000010010010000	3	1001000001000000	4	1001000001000000	4
146	0000100000001000	3	0100000000010000	2	0000100000001000	3	0100000000010000	2
147	0000100001000100	3	0000100001000100	3	1000000000100000	2	1000000000100000	2
148	0000100010001000	3	0100000010000100	3	0000100010001000	3	0100000010000100	3
149	0000100100010000	3	0000100100010000	3	1000000000100000	3	1000000000100000	3
150	0001000000010000	3	0001000000010000	3	0100000100001000	3	0100000100001000	3
151	0001000010000100	3	0001000010000100	3	1000000001000000	4	1000000001000000	4
152	0001000100001000	3	0100001000010000	3	0001000100001000	3	0100001000010000	3
153	0001001000010000	3	0001001000010000	3	1001000001000001	1	1001000001000001	1
154	0010000000100000	3	0010000000100000	3	0100000100001000	2	0100000100001000	2
155	0010000100000100	3	0010000100000100	3	1001000100100100	3	1001000100100100	3
156	0010000100100100	3	0010000100100100	3	1000100100100010	1	1000100100100010	1
157	0010001000001000	3	0100000000100001	1	0010001000001000	3	0100000000100001	1
158	0010001001000100	3	0010001001000100	3	1000100100000100	3	0100100100000000	4
159	0010010000010000	3	0010010000010000	3	1001001001000100	2	1001001001000100	2
160	0010010010000100	3	0010010010000100	3	1001001000001000	2	1001001000001000	2
161	0000001000010010	1	0100000000010000	3	1000100100010001	1	0100000000010000	3
162	0000001000001001	1	0100100100100100	2	1000100010010010	1	0100100100100100	2
163	0000000100000010	1	0100100100100100	3	1000100010001001	1	0100100100100100	3
164	0000000010000001	1	0100100100010010	1	1000100001000010	1	0100100100010010	1
165	0010010010010001	1	0010010010010001	1	1001000100100100	2	1001000100100100	2
166	0010010000100010	1	0010010000100010	1	1001000100000100	2	1001000100000100	2
167	0010010001001001	1	0100100100000100	2	0010010001001001	1	0100100100000100	2
168	0010010000010001	1	0010010000010001	1	1001001001000100	3	1001001001000100	3
169	0010001000010010	1	0010001000010010	1	1000100000100001	1	1000100000100001	1
170	0010000100000010	1	0010000100000010	1	1000010010010001	1	1000010010010001	1
171	0010001000001001	1	0100100000100000	3	0010001000001001	1	0100100000100000	3
172	0010000010000001	1	0010000010000001	1	1000010001001001	1	1000010001001001	1
173	0001001000100010	1	0001001000100010	1	1000010000100010	1	1000010000100010	1
174	0001001000010001	1	0001001000010001	1	1000010000010001	1	1000010000010001	1
175	0001000100010010	1	0001000100010010	1	1000001000010010	1	1000001000010010	1
176	0001000010000010	1	0001000010000010	1	1000001000001001	1	1000001000001001	1
177	0001001001001001	1	0100100010000010	1	0001001001001001	1	0100100010000010	1
178	0001000001000001	1	0001000001000001	1	1000000100000010	1	1000000100000010	1
179	0000100100100010	1	0000100100100010	1	1000000010000001	1	1000000010000001	1
180	0000100100010001	1	0000100100010001	1	0100100100001001	1	0100100100001001	1
181	0001000100001001	1	0100100000100000	2	0001000100001001	1	0100100000100000	2
182	0000100010010010	1	0000100010010010	1	0100010010001001	1	0100010010001001	1
183	0000100001000010	1	0000100001000010	1	0100001001001001	1	0100001001001001	1
184	0000100010001001	1	0100010010000100	3	0000100010001001	1	0100010010000100	3
185	0000100000100001	1	0000100000100001	1	1001000000100000	2	1001000000100000	2
186	0000010010010001	1	0000010010010001	1	1000100100001000	2	1000100100001000	2
187	0000010000100010	1	0000010000100010	1	1000100010000100	2	1000100010000100	2
188	0000010001001001	1	0100100001000001	1	0000010001001001	1	0100100001000001	1
189	0000010000010001	1	0000010000010001	1	1000100000010000	2	1000100000010000	2
190	0000001001001000	2	0100010010000100	2	1000010010001000	2	0100010010000100	2
191	0000001000100100	2	0100010000010000	2	1000010001000100	2	0100010000010000	2
192	0000001000000100	2	0100001001000100	2	1000010000001000	2	0100001001000100	2

© ISO/IEC 2005 — All rights reserved
Copyright International Organization for Standardization
Reproduced by IHS under license with ISO
No reproduction or networking permitted without license from IHS
Not for Resale

Table G.1 – Main Conversion Table (continued)

8-bit byte	State 1		State 2		State 3		State 4	
	Code Word msb lsb	Next State	Code Word msb lsb	Next State	Code Word msb lsb	Next State	Code Word msb lsb	Next State
193	0010010010001000	2	0100010000010000	3	0010010010001000	2	0100010000010000	3
194	0010010001000100	2	0010010001000100	2	1000001001001000	2	1000001001001000	2
195	0010010000001000	2	0100010010010010	1	0010010000001000	2	0100010010010010	1
196	0010001000100100	2	0010001000100100	2	1000001000100100	2	1000001000100100	2
197	0010001000000100	2	0010001000000100	2	1000001000000100	2	1000001000000100	2
198	0010001001001000	2	0100010001000010	1	0010001001001000	2	0100010001000010	1
199	0001001001000100	2	0001001001000100	2	0100001000001000	2	0100001000001000	2
200	0001000100100100	2	0001000100100100	2	1001000000100000	3	1001000000100000	3
201	0001000100000100	2	0001000100000100	2	1000100100001000	3	1000100100001000	3
202	0001001000001000	2	0100010000100001	1	0001001000001000	2	0100010000100001	1
203	0001000000100000	2	0001000000100000	2	1000100010000100	3	1000100010000100	3
204	0000100010000100	2	0000100010000100	2	1000010010001000	3	1000010010001000	3
205	0000100000010000	2	0000100000010000	2	1000010001000100	3	1000010001000100	3
206	0000100100001000	2	0100001000100010	1	0000100100001000	2	0100001000100010	1
207	0000010010001000	2	0100001000010001	1	0000010010001000	2	0100001000010001	1
208	0000010001000100	2	0000010001000100	2	1000001000100100	3	1000001000100100	3
209	0000010000001000	2	0100000100010010	1	0000010000001000	2	0100000100010010	1
210	0000001000000100	3	0100000010000010	1	1000010000001000	3	0100000010000010	1
211	0000001000100100	3	0100000100100100	2	1000001001001000	3	0100000100100100	2
212	0000001001001000	3	0100000100000100	2	1000001000000100	3	0100000100000100	2
213	0000010000001000	3	0100000001000001	1	0000010000001000	3	0100000001000001	1
214	0000010001000100	3	0000010001000100	3	0100001000001000	3	0100001000001000	3
215	0000010010001000	3	0100000000100000	2	0000010010001000	3	0100000000100000	2
216	0000100000010000	3	0000100000010000	3	1001001000010000	3	1001001000010000	3
217	0000100010000100	3	0000100010000100	3	1001000100000100	3	1001000100000100	3
218	0000100100001000	3	0100000100000100	3	0000100100001000	3	0100000100000100	3
219	0001000000100000	3	0001000000100000	3	0100000100001001	1	0100000100001001	1
220	0001000100000100	3	0001000100000100	3	1001001000010000	2	1001001000010000	2
221	0001000100100100	3	0001000100100100	3	1001000100001000	2	1001000100001000	2
222	0001001000001000	3	0100000100100100	3	0001001000001000	3	0100000100100100	3
223	0001001001000100	3	0001001001000100	3	1001001000001000	3	1001001000001000	3
224	0010001000000100	3	0010001000000100	3	1000100000010000	3	1000100000010000	3
225	0010001000100100	3	0010001000100100	3	1001001001000010	1	1001001001000010	1
226	0010001001001000	3	0100001001000100	3	0010001001001000	3	0100001001000100	3
227	0010010000001000	3	0100100100000100	3	0010010000001000	3	0100100100000100	3
228	0010010001000100	3	0010010001000100	3	1001000100001000	3	1001000100001000	3
229	0010010010001000	3	0100000000100000	3	0010010010001000	3	0100000000100000	3
230	0010000001000000	4	0010000001000000	4	1001001000100001	1	1001001000100001	1
231	0000001001001001	1	0100100100100010	1	1001000100100010	1	0100100100100010	1
232	0000001000100010	1	0100100010000100	2	1001000100010001	1	0100100010000100	2
233	0000001000010001	1	0100100000010000	2	1001000010010010	1	0100100000010000	2
234	0000000100010010	1	0100000001000000	4	1001000010001001	1	0100000001000000	4
235	0000000100001001	1	0100100100010001	1	1001000001000010	1	0100100100010001	1
236	0000000010000010	1	0100100010010010	1	1001000000100001	1	0100100010010010	1
237	0000000001000001	1	0100100001000010	1	1000100100100001	1	0100100001000010	1
238	0010010000010010	1	0010010000010010	1	1000100010010001	1	1000100010010001	1
239	0010001000000010	1	0010001000000010	1	1001000010000100	3	1001000010000100	3
240	0010010000001001	1	0100100010000100	3	0010010000001001	1	0100100010000100	3
241	0010000100000001	1	0010000100000001	1	1001000010000100	2	1001000010000100	2

© ISO/IEC 2005 – All rights reserved

Copyright International Organization for Standardization
Reproduced by IHS under license with ISO
No reproduction or networking permitted without license from IHS
Not for Resale

Table G.1 – Main Conversion Table (concluded)

8-bit byte	State 1		State 2		State 3		State 4	
	Code Word msb lsb	Next State	Code Word msb lsb	Next State	Code Word msb lsb	Next State	Code Word msb lsb	Next State
242	0001001000010010	1	0001001000010010	1	1000000010000000	4	1000000010000000	4
243	0001000100000010	1	0001000100000010	1	1000100001001001	1	1000100001001001	1
244	0001001000001001	1	0100100000100001	1	0001001000001001	1	0100100000100001	1
245	0001000010000001	1	0001000010000001	1	1000100000100010	1	1000100000100010	1
246	0000100100010010	1	0000100100010010	1	1000100000010001	1	1000100000010001	1
247	0000100010000010	1	0000100010000010	1	1000010000010010	1	1000010000010010	1
248	0000100100001001	1	0100010010010001	1	0000100100001001	1	0100010010010001	1
249	0000100001000001	1	0000100001000001	1	1000010000001001	1	1000010000001001	1
250	0000010010010010	1	0000010010010010	1	1000001000000010	1	1000001000000010	1
251	0000010001000010	1	0000010001000010	1	1000000100000001	1	1000000100000001	1
252	0000010010001001	1	0100010000100010	1	0000010010001001	1	0100010000100010	1
253	0000010000100001	1	0000010000100001	1	0100100010001001	1	0100100010001001	1
254	0000001001000100	2	0100010000010001	1	1001000000010000	2	0100010000010001	1
255	0000001000001000	2	0100001000010010	1	1000100100010000	2	0100001000010010	1

© ISO/IEC 2005 — All rights reserved
Copyright International Organization for Standardization
Reproduced by IHS under license with ISO
No reproduction or networking permitted without license from IHS
Not for Resale

Table G.2 – Substitution Table

8-bit byte	State 1		State 2		State 3		State 4	
	Code Word msb lsb	Next State	Code Word msb lsb	Next State	Code Word msb lsb	Next State	Code Word msb lsb	Next State
0	0000010010000000	4	0000010010000000	4	0100100001001000	2	0100100001001000	2
1	0000100100000000	4	0000100100000000	4	0100100001001000	3	0100100001001000	3
2	0001001000000000	4	0001001000000000	4	0100100000001001	1	0100100000001001	1
3	0000001001000000	4	0100010000000001	1	1000001000000000	4	0100010000000001	1
4	0000000100100000	3	0100100000000010	1	1001000000000100	3	0100100000000010	1
5	0000000010010000	3	0100001000000000	4	1001000000100100	3	0100001000000000	4
6	0000000001001000	3	0100100000000100	2	1001000001001000	3	0100100000000100	2
7	0000000001001000	2	0100000100000000	4	1001000000000100	2	0100000100000000	4
8	0000000010010000	2	0100100010010000	3	1001000000100100	2	0100100010010000	3
9	0000000100100000	2	0100100000100100	2	1001000001001000	2	0100100000100100	2
10	0000010001000000	4	0000010001000000	4	1001001001000000	4	1001001001000000	4
11	0000100010000000	4	0000100010000000	4	1000100001001000	3	1000100001001000	3
12	0001000100000000	4	0001000100000000	4	0100010001001000	3	0100010001001000	3
13	0010001000000000	4	0010001000000000	4	1000100000000100	3	1000100000000100	3
14	0000001000100000	3	0100100000000100	3	1001000010010000	3	0100100000000100	3
15	0000000100010000	3	0100100010010000	2	1001000100100000	3	0100100010010000	2
16	0000000010001000	3	0100001000000001	1	0100100000001000	3	0100001000000001	1
17	0000000001000100	3	0100010000000010	1	0100100010001000	3	0100010000000010	1
18	0000000001000100	2	0100100000100100	3	1001000010010000	2	0100100000100100	3
19	0000000010001000	2	0100100100100000	3	1001000100100000	2	0100100100100000	3
20	0000000100010000	2	0100100100100000	2	0100010001001000	2	0100100100100000	2
21	0000001000100000	2	0100100000010010	1	0100100000001000	2	0100100000010010	1
22	0000010010000001	1	0000010010000001	1	1000100000100100	3	1000100000100100	3
23	0000100100000001	1	0000100100000001	1	1000100010010000	3	1000100010010000	3
24	0001001000000001	1	0001001000000001	1	0100100010001000	2	0100100010001000	2
25	0010010000000001	1	0010010000000001	1	1000100000000100	2	1000100000000100	2
26	0000000001001001	1	0100010000000100	3	1000010000000001	1	0100010000000100	3
27	0000000010010001	1	0100000100000001	1	1000100000000010	1	0100000100000001	1
28	0000000100100001	1	0100010000000100	2	1001000000001001	1	0100010000000100	2
29	0000001001000001	1	0100001000000010	1	1001000000010010	1	0100001000000010	1
30	0000100001000000	4	0000100001000000	4	1000100000100100	2	1000100000100100	2
31	0001000010000000	4	0001000010000000	4	1000100001001000	2	1000100001001000	2
32	0010000100000000	4	0010000100000000	4	0100010000001001	1	0100010000001001	1
33	0000010000100000	3	0000010000100000	3	0100100001001001	1	0100100001001001	1
34	0000001000010000	3	0100010000010010	1	1000100100100000	3	0100010000010010	1
35	0000000100001000	3	0100100000010001	1	1001000000001000	3	0100100000010001	1
36	0000000010000100	3	0100000010000000	4	1001000001000100	3	0100000010000000	4
37	0000010000100000	2	0000010000100000	2	1000001000000001	1	1000001000000001	1
38	0000000010000100	2	0100010000100100	3	1000100010010000	2	0100010000100100	3
39	0000000100001000	2	0100010000100100	2	1000100100100000	2	0100010000100100	2
40	0000001000010000	2	0100100000100010	1	1001000000001000	2	0100100000100010	1
41	0000010001000001	1	0000010001000001	1	1000010000000010	1	1000010000000010	1
42	0000010010000010	1	0000010010000010	1	1000000100000000	4	1000000100000000	4
43	0000100010000001	1	0000100010000001	1	1001000001000100	2	1001000001000100	2
44	0000100100000010	1	0000100100000010	1	1000100000001001	1	1000100000001001	1
45	0001000100000001	1	0001000100000001	1	1001000010001000	3	1001000010001000	3
46	0001001000000010	1	0001001000000010	1	1001000100010000	3	1001000100010000	3

© ISO/IEC 2005 – All rights reserved
Copyright International Organization for Standardization
Reproduced by IHS under license with ISO
No reproduction or networking permitted without license from IHS
Not for Resale

Table G.2 – Substitution Table (concluded)

8-bit byte	State 1		State 2		State 3		State 4	
	Code Word msb lsb	Next State	Code Word msb lsb	Next State	Code Word msb lsb	Next State	Code Word msb lsb	Next State
47	0010001000000001	1	0010001000000001	1	1000100000010010	1	1000100000010010	1
48	0010010000000010	1	0010010000000010	1	0100010000001000	3	0100010000001000	3
49	0000000001000010	1	0100100010010001	1	1001000000010001	1	0100100010010001	1
50	0000000010001001	1	0100100001000100	3	1001000000100010	1	0100100001000100	3
51	0000000010010010	1	0100010010010000	3	1001000001001001	1	0100010010010000	3
52	0000000100010001	1	0100010010010000	2	1001000010010001	1	0100010010010000	2
53	0000000100100010	1	0100100001000100	2	1001000100100001	1	0100100001000100	2
54	0000001000100001	1	0100100100100001	1	1001001001000001	1	0100100100100001	1
55	0000001001000010	1	0100100100010000	3	0100001000001001	1	0100100100010000	3
56	0001000001000000	4	0001000001000000	4	1001001000100000	3	1001001000100000	3
57	0010000010000000	4	0010000010000000	4	1001000010001000	2	1001000010001000	2
58	0010010010010000	3	0010010010010000	3	1001000100010000	2	1001000100010000	2
59	0010010001001000	3	0100100100010000	2	0010010001001000	3	0100100100010000	2
60	0010010000100100	3	0010010000100100	3	1001001000100000	2	1001001000100000	2
61	0010010000000100	3	0010010000000100	3	0100001001001000	2	0100001001001000	2
62	0001001001001000	3	0100000010000001	1	0001001001001000	3	0100000010000001	1
63	0001001000100100	3	0001001000100100	3	0100001001001000	3	0100001001001000	3
64	0001001000000100	3	0001001000000100	3	0100010010001000	3	0100010010001000	3
65	0000100100100100	3	0000100100100100	3	0100100100001000	3	0100100100001000	3
66	0000100100000100	3	0000100100000100	3	1000010000000100	3	1000010000000100	3
67	0000100000100000	3	0000100000100000	3	1000010000100100	3	1000010000100100	3
68	0000010010000100	3	0000010010000100	3	1000010001001000	3	1000010001001000	3
69	0000010000010000	3	0000010000010000	3	1000010010010000	3	1000010010010000	3
70	0000001001000100	3	0100001000000100	2	1000100000001000	3	0100001000000100	2
71	0000001000001000	3	0100100000010000	3	1000100010001000	3	0100100000010000	3
72	0000000100100100	3	0100010001000100	3	1000100100010000	3	0100010001000100	3
73	0000000100000100	3	0100001000100100	3	1001000000010000	3	0100001000100100	3
74	0000010000010000	2	0000010000010000	2	1000100001000100	3	1000100001000100	3
75	0001001001001000	2	0100001000000100	3	0001001001001000	2	0100001000000100	3
76	0000010010000100	2	0000010010000100	2	0100010000001000	2	0100010000001000	2
77	0000100000100000	2	0000100000100000	2	0100010010001000	2	0100010010001000	2
78	0010010001001000	2	0100000100000010	1	0010010001001000	2	0100000100000010	1
79	0000100100000100	2	0000100100000100	2	0100100100001000	2	0100100100001000	2
80	0000100100100100	2	0000100100100100	2	1000010000000100	2	1000010000000100	2
81	0001001000000100	2	0001001000000100	2	1000010000100100	2	1000010000100100	2
82	0001001000100100	2	0001001000100100	2	1000010001001000	2	1000010001001000	2
83	0010010000000100	2	0010010000000100	2	1000010010010000	2	1000010010010000	2
84	0010010000100100	2	0010010000100100	2	1000100000001000	2	1000100000001000	2
85	0010010010010000	2	0010010010010000	2	0100010001001001	1	0100010001001001	1
86	0000000100000100	2	0100001000100100	2	1000100001000100	2	0100001000100100	2
87	0000000100100100	2	0100010001000100	2	1000100010001000	2	0100010001000100	2

Copyright International Organization for Standardization
Reproduced by IHS under license with ISO
No reproduction or networking permitted without license from IHS
Not for Resale
© ISO/IEC 2005 — All rights reserved

Annex H
(normative)

Optimum Power Control

The laser power used for recording a disk is dependent on both the disk and the recorder that are being used, therefore this power shall be determined for the combination of each recorder and disk. Such a determination of the actual optimum recording power P_o is called Optimum Power Control (OPC).

To facilitate the OPC, a reference values for the recording power is given. This value is encoded as special information in the pre-pits in Lead-in Zone (see clause 27). This value is the OPC suggested code for a wavelength specified as the Wavelength Code at the reference speed.

The OPC shall be performed in an area on the disk that is specially reserved for this purpose: the Power Calibration Area (PCA, see clause 28).

The optimum recording power is the laser power at which jitter is minimized at the measuring conditions of the recorded disk specifications (see clause 13).

One example of OPC procedure which makes the determination of P_o easier for practical device electronics is described below.

The asymmetry of the recorded 8/16 modulated data is different for different recording powers, therefore, the optimum recording power for the specific combination of device and disk can be obtained by test recording 8/16 modulated data with different recording powers, and by measuring the resulting asymmetry in the HF signal. But directly using the definition of asymmetry is too complicated for the device electronics, therefore, a different parameter is defined as a representation of asymmetry. This parameter β is based on using the AC coupled HF signal before equalisation, and is defined as follows:

$\beta = (A_1+A_2) / (A_1-A_2)$

where (A_1+A_2) : the difference between the peak levels A_1 and A_2 of the HF signal

(A_1-A_2): the peak-to-peak value of the HF signal

See Figures H1 to H3.

Zero asymmetry of the measured HF signal results in $\beta = 0$.

β shall be measured with the PUH for recording as specified in 9.1.2, and asymmetry shall be measured with the PUH for reading as specified in 9.1.1 respectively. This means that for each design, a conversion shall be made from recorder read-out conditions to the conditions of the read-only pick-up.

© ISO/IEC 2005 – All rights reserved
Copyright International Organization for Standardization
Reproduced by IHS under license with ISO
No reproduction or networking permitted without license from IHS
Not for Resale

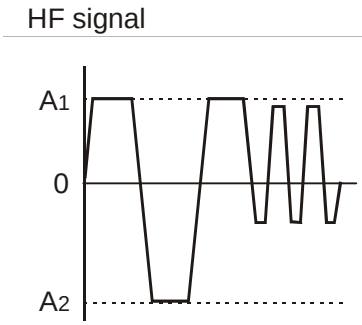

Figure H.1 - β < 0 (Low power)

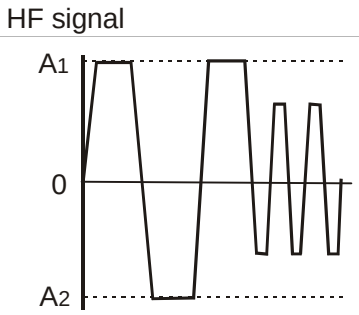

Figure H.2 - β = 0

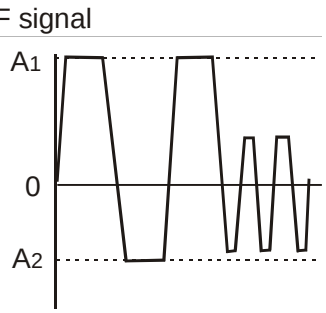

Figure H.3 - β > 0 (High power)

© ISO/IEC 2005 — All rights reserved
Copyright International Organization for Standardization
Reproduced by IHS under license with ISO
No reproduction or networking permitted without license from IHS
Not for Resale

Annex J
(normative)

Measurement of the groove wobble amplitude

The wobble amplitude in nanometres shall be derived from the Normalized Wobble signal (NWO) as shown below.

J.1 Wobble signal (WOb)

The wobble signal shall be calculated from the following equation.

$$WOb / 2 = (RPS / 2) \sin (2\pi a/T_p)$$

therefore

$$WOb = RPS \sin (2\pi a/T_p) \qquad (I)$$

where (see Figure J.1)

WOb : the peak to peak value of the wobble signal when neighbouring wobbles are in phase (minimum value)

RPS : the peak to peak value of the radial push-pull signal

a : wobble amplitude in nanometres

T_p : track pitch in nm

therefore

$$NWO = WOb / RPS = \sin (2\pi a/ T_p) \qquad (II)$$

Due to this normalization, the dependency on groove geometry, spot shape and optical aberrations have been eliminated.

J.2 Wobble amplitude

By the definition in equation (II) above, the relation between NWO and the wobble amplitude for the track pitch of 0,74 µm is:

Lower limit: 0,06 which corresponds to 7 nm
Upper limit: 0,12 which corresponds to 14 nm

© ISO/IEC 2005 – All rights reserved

Copyright International Organization for Standardization
Reproduced by IHS under license with ISO
No reproduction or networking permitted without license from IHS
Not for Resale

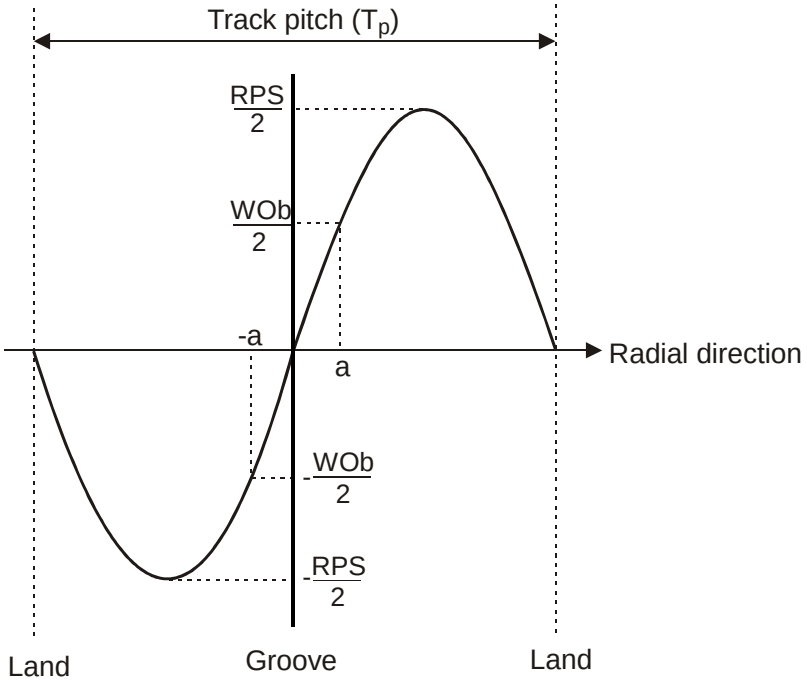

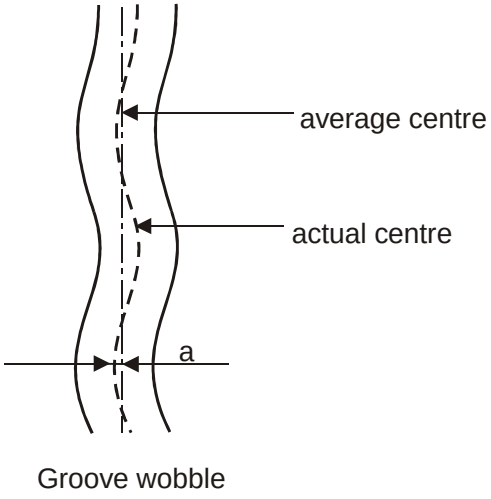

Figure J.1 - Groove wobble signal

© ISO/IEC 2005 — All rights reserved
Copyright International Organization for Standardization
Reproduced by IHS under license with ISO
No reproduction or networking permitted without license from IHS
Not for Resale

Annex K
(normative)

Measurement methods for the operational signals for an unrecorded disk

The following measurement methods shall be used for the measurement of the operational signals of an unrecorded disk:

- Focusing method : Astigmatic method
- Tracking method : Push-pull method
- Land Pre-Pit detection method : Push-pull method
- Wobble signal detection method : Push-pull method

K.1 Condition of the summing amplifier in the measurement circuit

For the measurements of

Radial push-pull tracking error signal,

Land Pre-Pit amplitude,

the output level of the summing amplifier shall be set to zero when the laser diode on the PUH is turned on and no disk is set on the spindle.

K.2 Condition of the differential amplifier in the measurement circuit

For the measurements of

Radial push-pull tracking error signal,

Land Pre-Pit amplitude,

Wobble signal,

the output gain of each photo-detector pre-amplifier and the differential balance shall be adjusted to equalize each AC signal amplitude.

K.3 Output gain of the summing and the differential amplifiers

For the normalization of

Radial push-pull tracking error signal,

Land Pre-Pit amplitude,

the output gain of the summing and the differential amplifiers shall be exactly equal.

© ISO/IEC 2005 – All rights reserved

Copyright International Organization for Standardization
Reproduced by IHS under license with ISO
No reproduction or networking permitted without license from IHS
Not for Resale

Annex L
(normative)

NBCA Code

L.1 Location of NBCA and Lead-in Zone

The NBCA shall be located between 22,71 ± 0,06 mm and 23,51 ± 0,06 mm from the centre of the centre hole, see Figure L.1. The recordings in the Lead-in Zone shall be performed from the sector number (02DA80) when the NBCA-Code is applied.

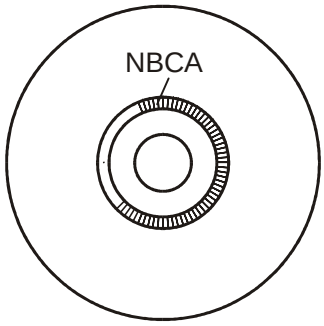

Figure L.1 - Outline of NBCA

L.2 Writing form

The NBCA shall be written with a series of low reflectance stripes arranged in the circumferential direction.

Each of the stripes shall extend fully across the NBCA in the radial direction.

L.3 Modulation method

Data bits written in the NBCA-Code are encoded by phase encoding into NBCA-Code channel bits. In the phase encoding, a data bit ZERO shall be changed into NBCA-Code channel bits of 01 and a data bit ONE shall be changed into NBCA-Code channel bits of 10. The NBCA-Code channel bit train shall be modulated by the RZ modulation method. The low reflectance stripes shall be formed corresponding to pulses after the RZ modulation process. The low reflectance stripes shall not exceed half of the NBCA-Code channel bit period.

The phase encoding method specified above shall be applied to information data, 4 check bytes of Error Detection Code (EDC_{NBCA}) and 16 bytes of Error Correction Code (ECC_{NBCA}) in NBCA-Data field. In other fields of NBCA-Data structure, a data bit ZERO shall be changed into NBCA-Code channel bits of 10 and a data bit ONE shall be changed into NBCA-Code channel bits of 01. See L.4 and Figure L.2.

L.4 NBCA-Code structure

The data in the NBCA-Code consists of a NBCA-Preamble field, a NBCA-Data field and a NBCA-Postamble field. All these fields shall be continuously written without gaps, as shown in Figure L.2.

© ISO/IEC 2005 — All rights reserved
Copyright International Organization for Standardization
Reproduced by IHS under license with ISO
No reproduction or networking permitted without license from IHS
Not for Resale

L.4.1 NBCA-Preamble field

The NBCA-Preamble field shall consist of 4 bytes of (00) preceded by a NBCA-Sync-Byte (SB_{NBCA}).

L.4.2 NBCA-Data field

In the NBCA-Data field, 16n – 4 bytes of information data (I_0, I_1...I_{16n-5}), 4 check bytes of Error Detection Code (D_0, D_1, D_2, D_3) and 16 bytes of Error Correction Code (C_{00}...C_{03}, C_{10}...C_{13},..., C_{30}...C_{33}) shall be written in this order. Where n is a positive integer not greater than 12.

A NBCA-Resync (RS_{NBCA}) shall be inserted before every 4 bytes throughout this field.

L.4.3 NBCA-Postamble field

The NBCA-Postamble field shall consist of 4 bytes of (55) preceded and followed by NBCA-Resync (RS_{NBCA}).

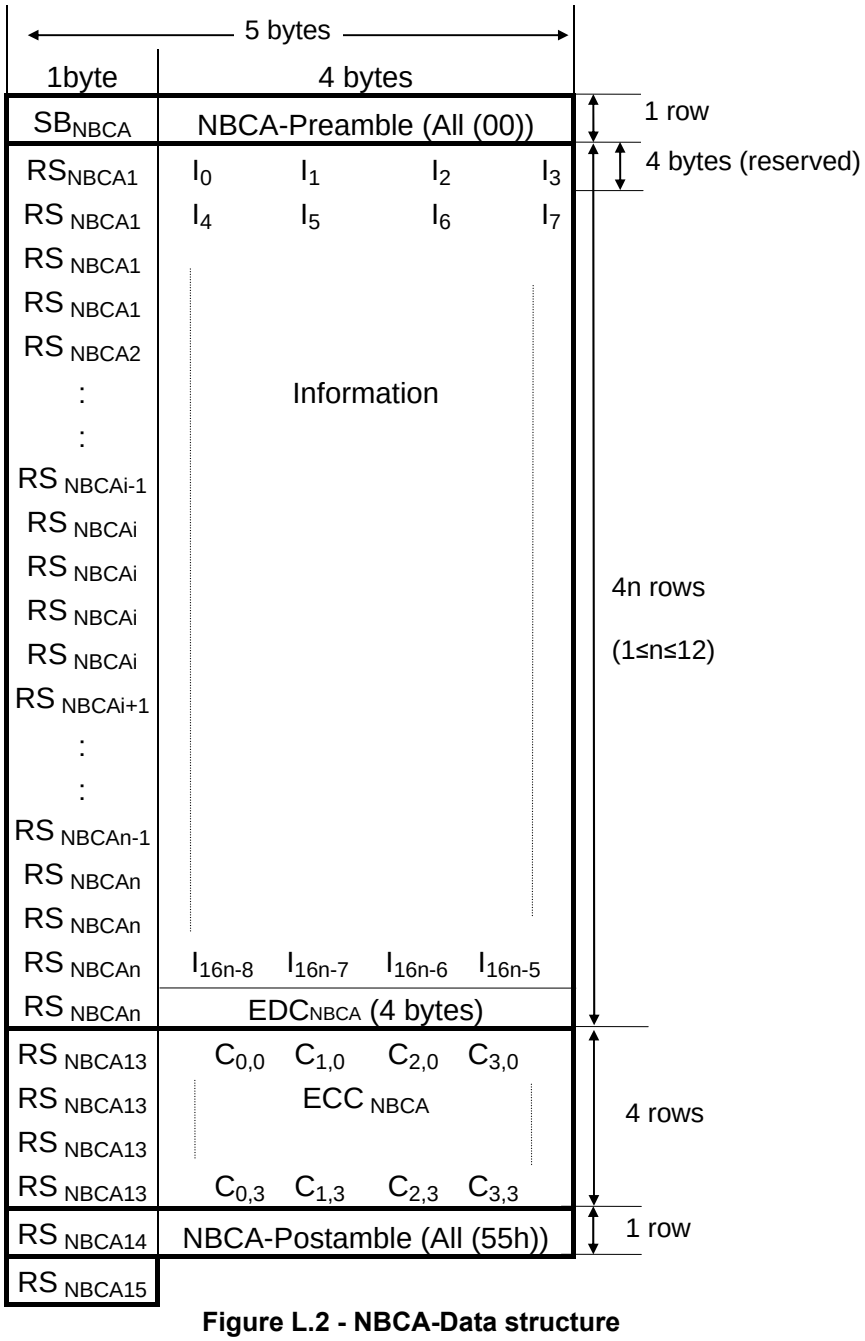

Figure L.2 - NBCA-Data structure

-`,,```,,,,````-`-,,`,,`,`,,`---
© ISO/IEC 2005 – All rights reserved
Copyright International Organization for Standardization
Reproduced by IHS under license with ISO
No reproduction or networking permitted without license from IHS
Not for Resale

L.5 NBCA Error Detection Code (EDC_{NBCA})

4 check bytes of Error Detection Code (D_0, D_1, D_2, D_3) (EDC_{NBCA}) shall be attached to the information data (I_0, I_1....I_{16n-5}). Polynomials $EDC_{NBCA}(x)$ and $I_{NBCA}(x)$ are defined as follows:

$$EDC_{NBCA}(x) = \sum_{i=0}^{31} b_i x^i$$

$$I_{NBCA}(x) = \sum_{i=32}^{128n-1} b_i x^i$$

where, i is the bit number starting with 0 and incremented from the LSB of the last byte of EDC_{NBCA} toward the MSB of the first byte of the information data, and b_i represents the value of i-th bit.

The polynomial $EDC_{NBCA}(x)$ shall be calculated as follows:

$EDC_{NBCA}(x) = I_{NBCA}(x) \bmod G(x)$

where, $G(x) = x^{32} + x^{31} + x^4 + 1$.

L.6 NBCA Error Correction Code (ECC_{NBCA})

A Reed-Solomon type ECC with 4-way interleaving shall be used for the information data and the EDC_{NBCA}.

Polynomials $R_{NBCAj}(x)$ and $I_{NBCAj}(x)$ are defined as follows:

$$R_{NBCAj}(x) = \sum_{i=0}^{3} C_{j,i} x^{3-i}$$

$$I_{NBCAj}(x) = \sum_{i=0}^{4n-2} I_{(j+4i)} x^{51-i} + D_j x^{52-4n}$$

where, I_m represents the value of the m-th information data byte and D_k represents the value of k-th EDC_{NBCA} byte.

The polynomial $R_{NBCAj}(x)$ shall be calculated as follows:

$R_{NBCAj}(x) = I_{NBCAj}(x) \bmod G_{pNBCA}(x)$

$$G_{pNBCA}(x) = \prod_{k=0}^{3} (x + \alpha^k)$$

where, α represents the root of the polynomial;

$G_p(x) = x^8 + x^4 + x^3 + x^2 + 1$

© ISO/IEC 2005 — All rights reserved
Copyright International Organization for Standardization
Reproduced by IHS under license with ISO
No reproduction or networking permitted without license from IHS
Not for Resale

L.7 NBCA-Sync-Byte (SB_{NBCA}) and NBCA-Resync (RS_{NBCA})

The NBCA-Sync-Byte (SB_{NBCA}) precedes the NBCA-Preamble. The NBCA-Resync (RS_{NBCA}) shall be inserted before every 4 information bytes, before the EDC_{NBCA}, before the ECC_{NBCA}, and before and after the NBCA-Postamble.

The NBCA-Sync-Byte and the NBCA-Resync shall have patterns as shown in Table L.1.

Table L. 1 – Bit pattern of NBCA-Sync-Byte and NBCA-Resync

Sync Byte /Resync	Bit pattern											
	Fixed pattern (Channel bit)								Sync Code (Data bit)			
	C_{15}	C_{14}	C_{13}	C_{12}	C_{11}	C_{10}	C_9	C_8	b_3	b_2	b_1	b_0
SB_{NBCA}	0	1	0	0	0	1	1	0	0	0	0	0
RS_{NBCA1}	0	1	0	0	0	1	1	0	0	0	0	1
RS_{NBCA2}	0	1	0	0	0	1	1	0	0	0	1	0
⋮				⋮						⋮		
RS_{NBCAi}	0	1	0	0	0	1	1	0	i			
⋮				⋮						⋮		
RS_{NBCA15}	0	1	0	0	0	1	1	0	1	1	1	1
	Recorded in RZ mod.								Recorded in PE-RZ mod.			

L.8 NBCA signal specifications

The read-out signal from the NBCA by an optical pick-up specified in the measuring conditions in 9.1.1 and 9.1.2 shall satisfy the NBCA signal specifications. The NBCA read-out signal shall be obtained by summing the currents of the four elements of the quadrant photo detector, when the light beam crosses the tracks.

L.8.1 NBCA signal amplitude

The signal level corresponding to a high and a low reflectance shall be IBH and IBL respectively and the zero level shall be the signal level obtained from the measuring device when no disk is inserted, as shown in Figure L.3.

These signals shall satisfy the following specification.

IBL / IBH: 0,50 max.

L.8.2 NBCA time period

The edge position of the NBCA signal shall be the position at which the NBCA signal crosses the averaged level between IBH and IBL. The time period of NBCA shall satisfy the following specifications, when the rotation speed of a disk is 1 440 rpm (24 Hz). See Figure L.3.

Leading edge time period (TPl) : 8,89n µs ± 2,00 µs (n = 1, 2, 3 or 4)

Pulse length (TL) : 3,00 µs ± 1,50 µs

© ISO/IEC 2005 – All rights reserved

Copyright International Organization for Standardization
Reproduced by IHS under license with ISO
No reproduction or networking permitted without license from IHS
Not for Resale

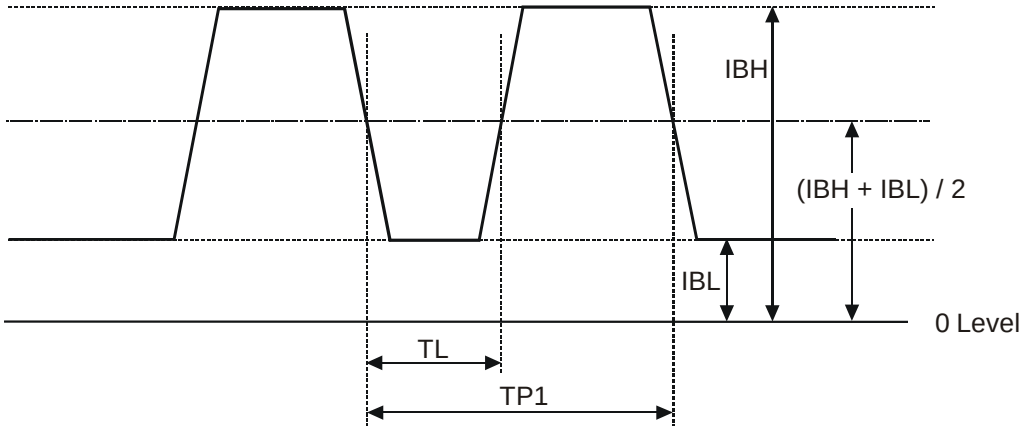

Figure L.3 - Read-out signal from NBCA

L.8.3 NBCA jitter value

The jitter value shall be defined as the normalized standard deviation of the Leading edge time period (TPl) and shall satisfy the following specification.

Jitter value < 8 %

Measuring method:

a) Signal condition: Raw NBCA signal without filtering

b) Rotation speed: 1 440 rpm (24 Hz)

c) Measuring position: r = 23,1 mm (around the centre of NBCA lines)

d) Slice level of Time Interval Analyser shall be set to the half depth of NBCA pulse signal

e) Jitter value: σ/ 8,89

where σ[μs] is the standard deviation of TPl when n = 1

8,89 [μs] is the standard value of TPl when n = 1

L.9 Logical format of information data

The NBCA-Data field shall have (16n – 4) bytes of information data (I_0, I_1...I_{16n-5}) as specified in L.4.2. This information data shall be recorded on a unit of NBCA Record. The length of NBCA Record shall be a multiple of 4 bytes. Each NBCA Record shall consist of NBCA Record ID field, Version number field, Data length field and Record data field as shown in Table L.2.

Table L.2 – NBCA Record format

Relative Byte Position (RBP)	Contents	Number of bytes
0 to 1	NBCA Record ID	2 bytes
2	Version number	1 byte
3	Data length	1 byte
4 to 4m+3	Record data	4m bytes

m: positive integer

© ISO/IEC 2005 — All rights reserved
Copyright International Organization for Standardization
Reproduced by IHS under license with ISO
No reproduction or networking permitted without license from IHS
Not for Resale

RBP 0 to 1 - NBCA Record ID

This field shall be the NBCA Record ID assigned uniquely for each NBCA Record.

RBP 2 - Version number

This field shall be the Version number assigned for each NBCA Record independently.

RBP 3 - Data length

This field shall specify the length of Record data.

RBP 4 to 4m+3 - Record data

This field shall be a multiple of 4 bytes and shall contain the Record data only.

The NBCA Record ID shall be defined commonly for all DVD Physical Specifications, and shall be classified into two categories as shown in Table L.3.

Table L.3 – Categories of NBCA Record ID

NBCA Record ID	Definition
(0000) – (7FFF)	Assigned for authorized applications
(8000) – (FFFF)	Assigned for notified applications

When two or more NBCA Records are recorded in the NBCA-Data field, each NBCA Record shall have a different NBCA Record ID and shall be recorded in ascending order of NBCA Record ID. The trailing zeros may be padded in order to adjust for (16n – 4) bytes of information data. An example of information data is shown in Table L.4.

Table L.4 – An example of information data

Byte Position	Contents	Number of bytes
0 to 11	NBCA Record No.1 (Record data length of 8 bytes)	12 bytes
12 to 31	NBCA Record No.2 (Record data length of 16 bytes)	20 bytes
32 to 43	Trailing zeros	12 bytes

© ISO/IEC 2005 – All rights reserved
Copyright International Organization for Standardization
Reproduced by IHS under license with ISO
No reproduction or networking permitted without license from IHS
Not for Resale

Annex M
(normative)

Border Zone

M.1 Border Zone construction

The Border Zone is a linking region that prevents the optical pick-up from over running on an unrecorded area in an intermediate state, during read out by read-only drives.

The Border Zone shall consist of the current Border-out and the next Border-in (see Figure M1).

The Border Zone shall have 3 Next Border Markers to denote the next Bordered area.

When a disk in an intermediate state is played back on read-only drives, a disk shall have the Border-out and/or Border-in.

The Border-out followed by the Lead-out Zone is allowed to consist of the first 37 ECC blocks (Unit Position of 0 to 36, see Figure M.6 and Table M.6).

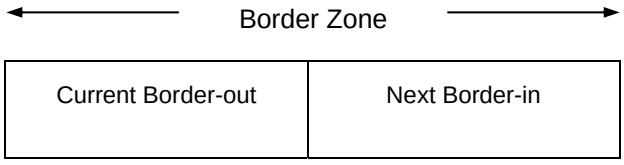

Figure M.1 - Structure of Border Zone

The Border Zone for various states in different areas of the disk shall be as shown in Figure M.2.

© ISO/IEC 2005 — All rights reserved
Copyright International Organization for Standardization
Reproduced by IHS under license with ISO
No reproduction or networking permitted without license from IHS
Not for Resale

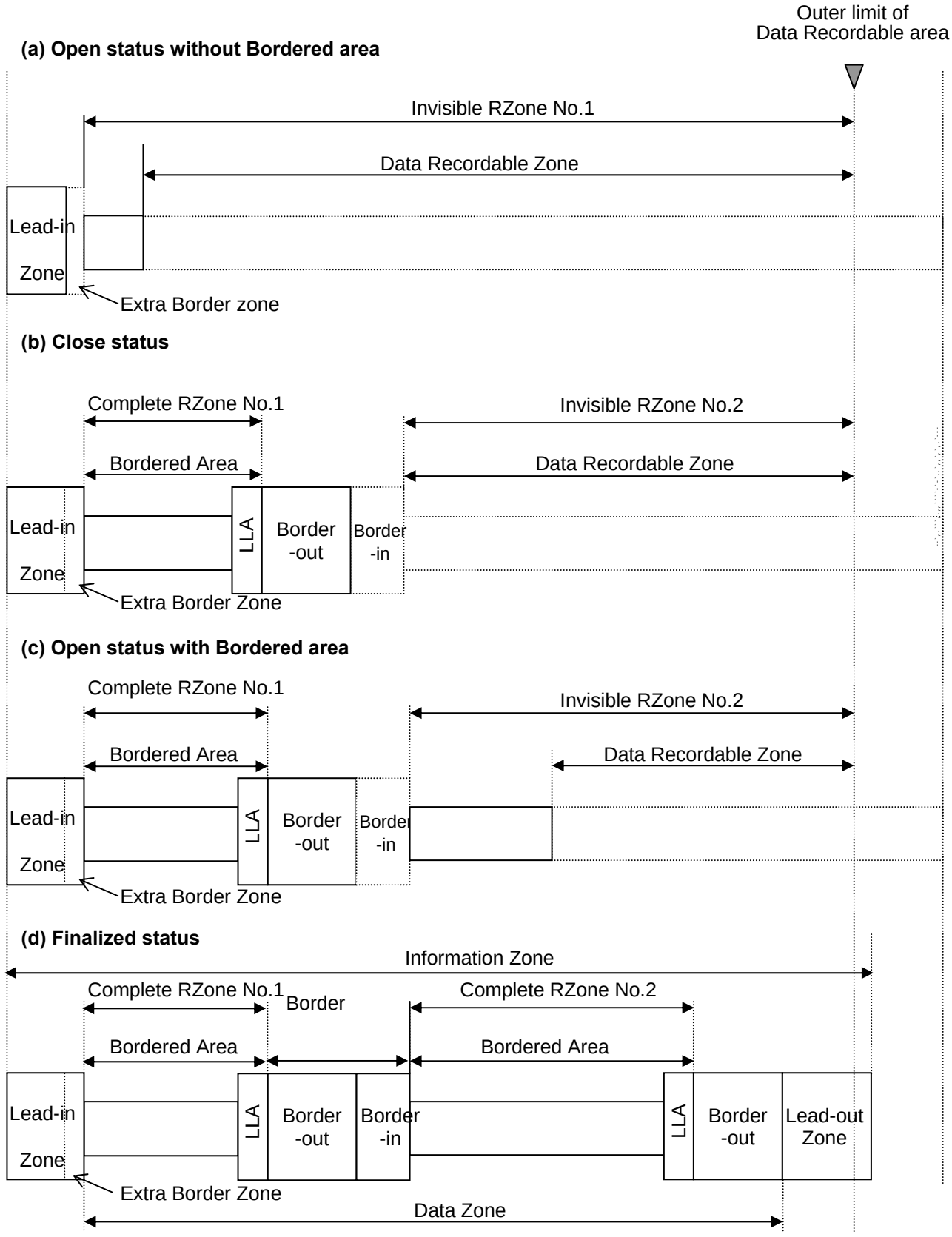

LLA: Linking Loss Area

Figure M.2 - Examples of Border Recording in Information Zone

© ISO/IEC 2005 - All rights reserved

Copyright International Organization for Standardization
Reproduced by IHS under license with ISO
No reproduction or networking permitted without license from IHS
Not for Resale

M.2 Border Zone Size

The size of a Border Zone shall depend on its location and order.

The sector number of a Border-out shall be larger than (03 FEFF).

A Border-out shall be started at an ECC Block boundary.

The size of a Border Zone shall be as shown in Table M.1.

Table M.1 – Border Zone Size

First PSN of a Border-out	(03FF00) to (0B25FF)	(0B2600) to (1656FF)	(16 5700) to outer limit of Data Recordable Zone – (Border Zone size + Truncated Border-out size)
First Border Zone size	56 MB 1792 ECC Blocks	74 MB 2368 ECC Blocks	92 MB 2944 ECC Blocks
Other Border Zone size	12 MB 384 ECC Blocks	15 MB 480 ECC Blocks	19 MB 608 ECC Blocks

M.3 Border Zone Information

M.3.1 Border Zone Information Structure

The Border Zone Information Structure shall be as shown in Figure M.3.

The contents of each unit shall be as shown in Table M.2.

Each unit shall consist of 1 ECC Block.

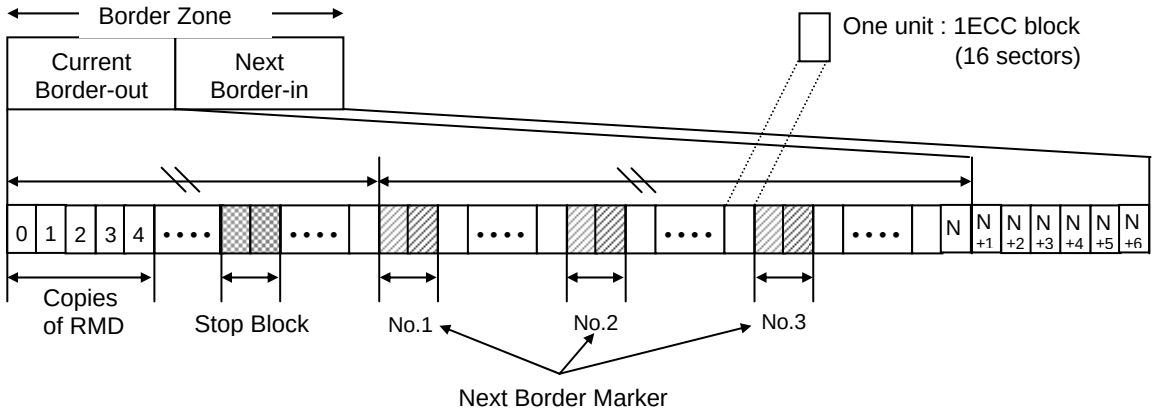

Figure M.3 - Border Zone Information Structure

The address of the first Next Border Marker is calculated as follows:

Address of the first Next Border Marker = ((Start sector number of the next Border-in) + (Start sector number of the current Border-out)) / 2

The start sector number of the next Border-in and the start sector number of the current Border-out shall be recorded in the Lead-in Zone or the Border-in.

© ISO/IEC 2005 — All rights reserved
Copyright International Organization for Standardization
Reproduced by IHS under license with ISO
No reproduction or networking permitted without license from IHS
Not for Resale

Table M.2 – Content of Border Zone Information

	Unit Position (UP)	Contents
Border-out	0 to 4	Current RMD
	5 to 36	Reserved
	37, 38	Stop Block
	39 to M-1	Reserved
	M to M+1	Next Border Marker No.1
	M+2	Block SYNC Guard Area No.1
	M+3 to M+9	Reserved
	M+10 to M+11	Next Border Marker No.2
	M+12	Block SYNC Guard Area No.2
	M+13 to M+19	Reserved
	M+20 to M+21	Next Border Marker No.3
	M+22	Block SYNC Guard Area No.3
	M+23 to N-1	Reserved
	N	Linking Loss Area
Border-in	N+1 to N+5	Updated Physical format information blocks
	N+6	Block SYNC Guard Area

Unit Position corresponds to the relative position from the beginning of Border Zone.

M and N depend on the location and order of each Border Zone.

(UP 0 to 4) Current RMD

In this area, 5 copies of the latest RMD shall be recorded from the beginning of the Border-out.

The Data type bit of the sectors in 5 copies of the Current RMD shall be set to ZERO.

(UP 5 to 36)

Reserved.

(UP 37, 38) Stop Block

The area type of the Stop Block shall be a Lead-out attribute and the Main Data of this block shall be set to (00).

(UP 39 to M-1)

Reserved.

(UP M to M+1) Next Border Marker No.1

The Next Border Marker shall be arranged in the Border-out of Border Zone, to indicate whether the next Bordered Area is followed to this Border Zone or not.

If there is no next Bordered Area, the Next Border Marker shall not be recorded.

--`,,```,,,,````-`-`,,`,,`,`,,`---

© ISO/IEC 2005 – All rights reserved

Copyright International Organization for Standardization
Reproduced by IHS under license with ISO
No reproduction or networking permitted without license from IHS
Not for Resale

If there is a next Bordered Area, the Next Border Marker shall be recorded with (00) or the data that is identical with the recorded data in Updated Physical format information block in the same Border Zone, see Table M.2.

The structure of the Next Border Marker shall be as shown in Figure M.4.

When the Updated Physical format information block is recorded on the Next Border Marker, it shall be recorded two times by Lossless-Link scheme on each Next Border Marker (No.1 to No.3). See 23.3.

When a disk is finalized, the contents of each Next Border Marker shall be set to (00) with Lead-out attribute.

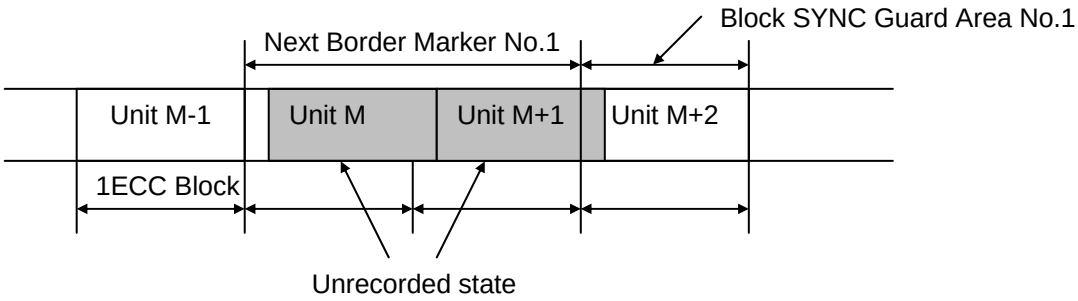

Figure M.4 - Structure of Next Border Marker

(UP M+2) Block SYNC Guard Area No.1

The Block SYNC Guard Area shall be used to read data in the following ECC blocks. After recording of the Next Border Marker, this block shall be the Linking Loss Area. See clause 23.

(UP M+3 to M+9)

Reserved.

(UP M+10 to M+11) Next Border Marker No.2

This field shall be as specified in (UP M to M+1) Next Border Marker No.1.

(UP M+12) Block SYNC Guard Area No.2

This field shall be as specified in (UP M+2) Block SYNC Guard Area No.1.

(UP M+13 to M+19)

Reserved.

(UP M+20 to M+21) Next Border Marker No.3

This field shall be as specified in (UP M to M+1) Next Border Marker No.1.

(UP M+22) Block SYNC Guard Area No.3

This field shall be as specified in (UP M+2) Block SYNC Guard Area No.1.

(UP M+23 to N-1)

Reserved.

(UP N) Linking Loss Area

--`,,```,,,,````-`-`,,`,,`,`,,`---

© ISO/IEC 2005 — All rights reserved
Copyright International Organization for Standardization
Reproduced by IHS under license with ISO
No reproduction or networking permitted without license from IHS
Not for Resale

See clause 23.

(UP N+1 to N+5) Updated Physical format information blocks

This block shall be as shown in Figure M.5. The same block shall be recorded five times in this field.

This block shall specify the Updated Physical format information that contains Updated Data area allocation (BP 4 to 15), Updated Start sector number of the current Border-out (BP 32 to 35) and Updated Start sector number of the next Border-in (BP 36 to 39), as shown in Table M.3.

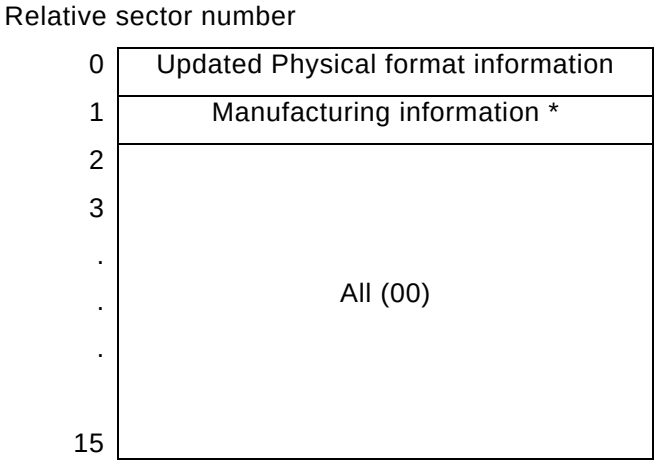

Figure M.5 - Structure of Updated Physical format information block

Table M.3 – Updated Physical format information

BP	Contents	Number of bytes
0	Disk Category and Version Number	1
1	Disk size and Maximum transfer rate of the disk	1
2	Disk structure	1
3	Recorded density	1
4 to 5	Updated Data area allocation	12
16	NBCA descriptor	1
17 to 31	Reserved	15
32 to 39	Updated Start sector number of Border Zone	8
40 to 2047	Reserved	2008

(BP 0) Disk Category and Version Number

This field shall be as specified in 25.1.3.2.

(BP 1) Disk size and Maximum transfer rate of the disk.

This field shall be as specified in 25.1.3.2.

© ISO/IEC 2005 – All rights reserved
Copyright International Organization for Standardization
Reproduced by IHS under license with ISO
No reproduction or networking permitted without license from IHS
Not for Resale

(BP 2) Disk structure

This field shall be as specified in 25.1.3.2.

(BP 3) Recorded density

This field shall be as specified in 25.1.3.2.

(BP 4 to 15) Updated Data area allocation

This field shall be as defined in Table M.4.

Table M.4 – Updated Data area allocation

BP	Contents
4	(00)
5 to7	Start sector number of the Data area (030000)
8	(00)
9 to 11	Last recorded address of last RZone in the Bordered area
12	(00)
13 to 15	(000000)

(BP 16) NBCA descriptor

This field shall be as specified in 25.1.3.2.

(BP 17 to 31)

This field shall be as specified in 25.1.3.2.

(BP 32 to 39) Updated Start sector number of Border Zone

This field shall be as defined in Table M.5.

Table M.5 – Updated Start sector number of Border Zone

BP	Contents
32 to 35	Start sector number of the current Border-out
36 to 39	Start sector number of the next Border-in

The Start sector number of the current Border-out field shall specify the start sector number of the Border-out of the current Bordered Area.

The Start sector number of the next Border-in field shall specify the start sector number of the Border-in of the next Bordered Area. In the case that this field is set to (00), the next Bordered Area shall not be recorded.

(BP 40 to 2047) reserved

This field shall be as specified in 25.1.3.2.

(UP N+6) Block SYNC Guard Area

This field shall be as specified in (UP M to M+1) Next Border Marker No.1.

© ISO/IEC 2005 — All rights reserved
Copyright International Organization for Standardization
Reproduced by IHS under license with ISO
No reproduction or networking permitted without license from IHS
Not for Resale

M.4 Border-out and Truncated Border-out

Border-out and Truncated Border-out that are followed by Lead-out Zone, are regions that prevent the optical pick up from over running on an unrecorded area during reading.

The construction of Border-out and Truncated Border-out are defined in Table M.6.

Bordered Area shall be located between Extra Border Zone or Border-in and Border-out or Truncated Border-out. At the end of Data Zone, Lead-out Zone shall be located after Border-out or Truncated Border-out on the disk instead of Border Zone, when the disk is finalized in the Incremental recording mode. The example structures after Finalization in the Incremental recording mode are shown in Figure M.6.

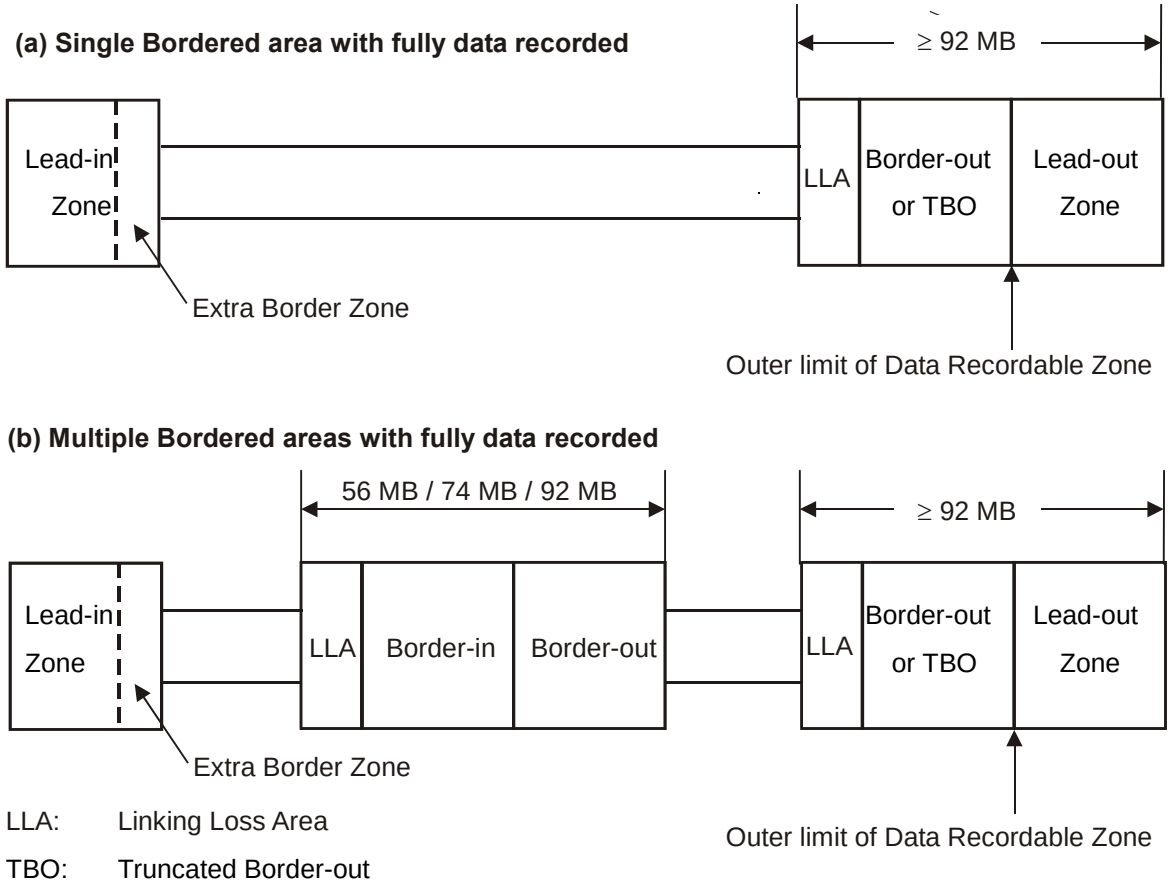

Figure M.6 - Examples of the Information Zone structure after Finalization

M.4.1 Minimum size of Border-out and Truncated Border-out followed by Lead-out Zone

The size of a Border-out or Truncated Border-out, and Lead-out Zone shall be as shown in Table M.6.

Table M.6 – Minimum size of Border-out or Truncated Border-out, and Lead-out Zone

The first Physical sector number of a Border-out or Truncated Border-out	(03FF00) to (0B25FF)	(0B2600) to (1656FF)	(165700) to outer limit of Data Recordable Zone – (Size of Border-out or Size of Truncated Border-out)
Size of Border-out or Truncated Border-out, and Lead-out Zone	56 MB 1792 ECC Blocks	74 MB 2368 ECC Blocks	92 MB 2944 ECC Blocks

© ISO/IEC 2005 – All rights reserved

Copyright International Organization for Standardization
Reproduced by IHS under license with ISO
No reproduction or networking permitted without license from IHS
Not for Resale

M.4.2 Construction of Border-out and Truncated Border-out

The contents of each unit shall be as shown in Table M.7.

Each unit shall consist of 1 ECC block.

Table M.7 - Configuration of Border-out and Truncated Border-out followed by Lead-out Zone

Unit position	Contents	
	Border-out	Truncated Border-out
0 to 4	Current RMD	Current RMD
5 to 36	Set to (00)	Set to (00)
37, 38	Stop Block	(Lead-out Zone)
39 to M-1	Reserved	
M to M+1	Next Border Marker No.1 (all (00))	
M+2	Block SYNC Guard Area No.1	
M+3 to M+9	Reserved	
M+10 to M+11	Next Border Marker No.2 (all (00))	
M+12	Block SYNC Guard Area No.2	
M+13 to M+19	Reserved	
M+20 to M+21	Next Border Marker No.3 (all (00))	
M+22	Block SYNC Guard Area No.3	
M+23 to N-1	Reserved	
N	Linking Loss Area	
N+1 to	(Lead-out Zone)	

Unit position corresponds to the relative position from the beginning of Border Zone.

M and N depend on the location and order of each Border Zone.

Content of each Unit Position is the same as that of Table M.2.

© ISO/IEC 2005 — All rights reserved
Copyright International Organization for Standardization
Reproduced by IHS under license with ISO
No reproduction or networking permitted without license from IHS
Not for Resale

Annex N
(normative)

Write Strategy variations

In addition to the Basic Write Strategy, specified in 14.3, the following variations of write strategy are recommended. See Figure N.1.

Each write pulse of length 4T to 11T and 14T consists of two parts, a top pulse and a multiple-pulse train with T representing the length of one clock period.

The write pulse of length 3T uses the top pulse only.

The top pulse shall start after the leading edge of the recording data and shall end always 3T after this leading edge (with T representing the clock period). The top pulse width (T_{top}) shall be selected according to the recording data length (T_{wd}), as specified by the Write Strategy code, see 27.3.6.3.

The leading and trailing edges of the top pulse can move along the time axis independently. The shift of the leading edge (T_{ld}) and of the trailing edge (T_{tr}) shall be selected according to the preceding space length (T_{sp}) and the recording data length (T_{wd}). The detailed parameters are given in Write Strategy code, see 27.3.6.3.

The multiple-pulse train shall start 3T after the leading edge of the recording data and shall end at the trailing edge of the recording data. The pulse period of the multi-pulse train shall be T. Its width (T_{mp}) shall be independent of the recording data length. This parameter is given in the Write Strategy code, see 27.3.6.3.

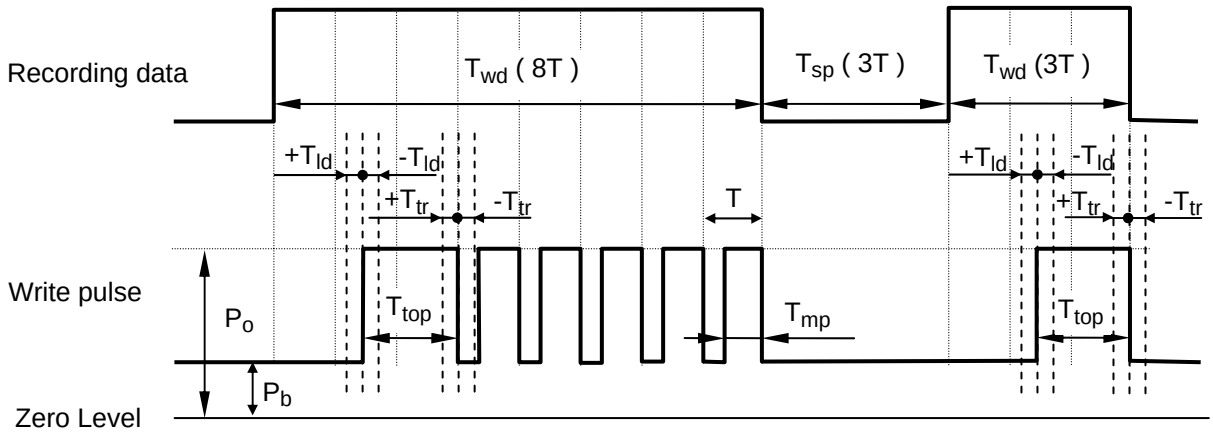

Figure N.1 - Write Strategy variations

© ISO/IEC 2005 – All rights reserved
Copyright International Organization for Standardization
Reproduced by IHS under license with ISO
No reproduction or networking permitted without license from IHS
Not for Resale

Annex P
(normative)

Measurement method of the Land Pre-Pit signal

The measurement method block diagram for measuring the Land Pre-Pit signal is shown in Figure P.1. An example of the Land Pre-Pit detector is shown in Figure P.2.

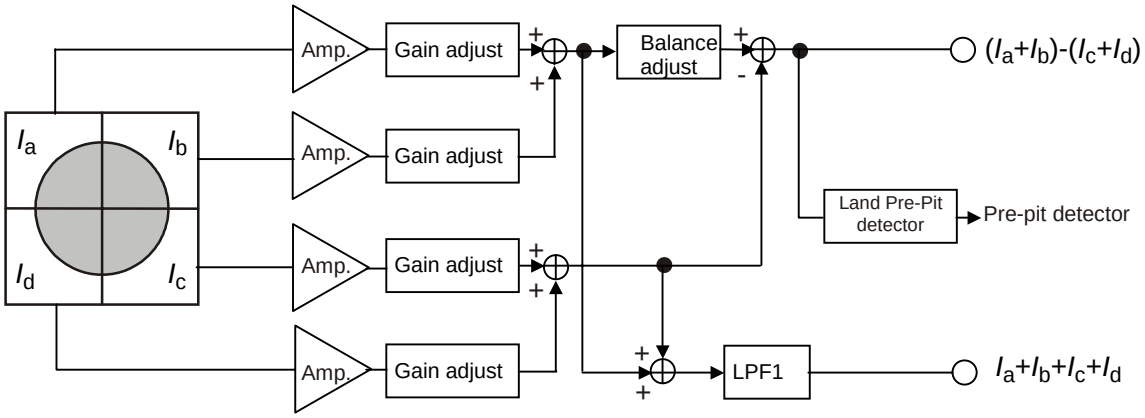

Figure P.1 - Block diagram for measuring the Land Pre-Pit signal

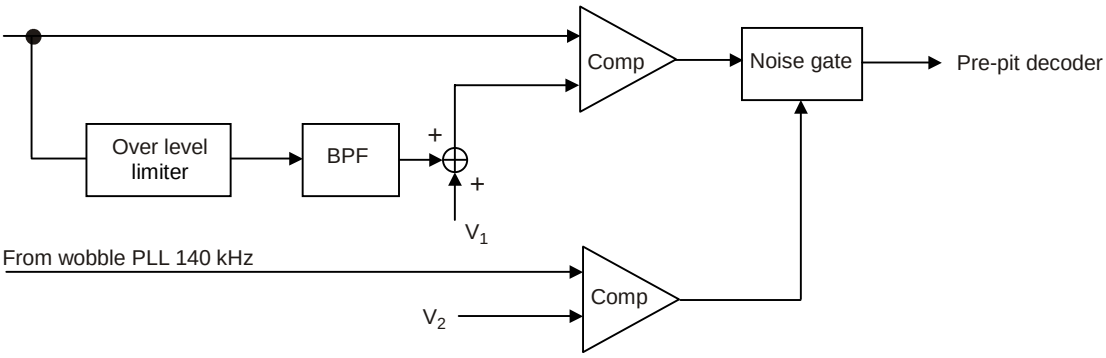

Figure P.2 - Example of the Land Pre-Pit detector

The over level limiter is provided to exclude noise larger than the wobble amplitude.

V_1 and V_2 are proper voltage for each equipment.

Band Pass Filter : 4th order

centre frequency = 140,6 kHz (wobble frequency)

cut-off frequency = ± 42,2 kHz (–3 dB)

© ISO/IEC 2005 — All rights reserved
Copyright International Organization for Standardization
Reproduced by IHS under license with ISO
No reproduction or networking permitted without license from IHS
Not for Resale

Annex Q
(informative)

Transportation

Q.1 General

As transportation occurs under a wide range of temperature and humidity variations, for differing periods, by many methods of transport and in all parts of the world, it is not possible to specify mandatory conditions for transportation or for packaging.

Q.2 Packaging

The form of packaging should be agreed between sender and recipient or, in absence of such an agreement, is the responsibility of the sender. It should take into account the following hazards.

Q.2.1 Temperature and humidity

Insulation and wrapping should be designed to maintain the conditions for storage over the estimated period of transportation.

Q.2.2 Impact loads and vibrations

a) Avoid mechanical loads that would distort the shape of the disk.

b) Avoid dropping the disk.

c) Disks should be packed in a rigid box containing adequate shock-absorbent material.

d) The final box should have a clean interior and a construction that provides sealing to prevent the ingress of dirt and moisture.

--`,,```,,,,````-`-`,,`,,`,`,,`---

© ISO/IEC 2005 – All rights reserved

Copyright International Organization for Standardization
Reproduced by IHS under license with ISO
No reproduction or networking permitted without license from IHS
Not for Resale

ICS 35.220.30

Price based on 135 pages

--`,,```,,,,````-`-`,,`,,`,`,,`---

© ISO/IEC 2005 – All rights reserved
Copyright International Organization for Standardization
Reproduced by IHS under license with ISO
No reproduction or networking permitted without license from IHS

Not for Resale