INTERNATIONAL STANDARD

ISO/IEC 22092

First edition
2002-07-01

Information technology — Data interchange on 130 mm magneto-optical disk cartridges — Capacity: 9,1 Gbytes per cartridge

Technologies de l'information — Échange de données sur cartouches de disque optique magnétique de 130 mm *— Capacité: 9,1 Gbytes par cartouche*

Reference number
ISO/IEC 22092:2002(E)

© ISO/IEC 2002

Copyright International Organization for Standardization
Reproduced by IHS under license with ISO
No reproduction or networking permitted without license from IHS

Not for Resale

PDF disclaimer

This PDF file may contain embedded typefaces. In accordance with Adobe's licensing policy, this file may be printed or viewed but shall not be edited unless the typefaces which are embedded are licensed to and installed on the computer performing the editing. In downloading this file, parties accept therein the responsibility of not infringing Adobe's licensing policy. The ISO Central Secretariat accepts no liability in this area.

Adobe is a trademark of Adobe Systems Incorporated.

Details of the software products used to create this PDF file can be found in the General Info relative to the file; the PDF-creation parameters were optimized for printing. Every care has been taken to ensure that the file is suitable for use by ISO member bodies. In the unlikely event that a problem relating to it is found, please inform the Central Secretariat at the address given below.

© ISO/IEC 2002

All rights reserved. Unless otherwise specified, no part of this publication may be reproduced or utilized in any form or by any means, electronic or mechanical, including photocopying and microfilm, without permission in writing from either ISO at the address below or ISO's member body in the country of the requester.

ISO copyright office
Case postale 56 • CH-1211 Geneva 20
Tel. + 41 22 749 01 11
Fax + 41 22 749 09 47
E-mail copyright@iso.ch
Web www.iso.ch

Printed in Switzerland

Copyright International Organization for Standardization
Reproduced by IHS under license with ISO
No reproduction or networking permitted without license from IHS

© ISO/IEC 2002 – All rights reserved

Not for Resale

Contents

Section 1 - General **1**

1 Scope **1**

2 Conformance **1**
2.1 Optical Disk Cartridge (ODC) **1**
2.2 Generating system **1**
2.3 Receiving system **1**
2.4 Compatibility statement **1**

3 Normative reference **2**

4 Terms and definitions **2**
4.1 asymmetry **2**
4.2 band **2**
4.3 case **2**
4.4 clamping zone **2**
4.5 control track **2**
4.6 Cyclic Redundancy Check (CRC) **2**
4.7 defect management **2**
4.8 disk reference plane **2**
4.9 emulation **2**
4.10 entrance surface **2**
4.11 Error Correction Code (ECC) **2**
4.12 format **2**
4.13 hub **2**
4.14 interleaving **2**
4.15 Kerr rotation **3**
4.16 land and groove **3**
4.17 logical track **3**
4.18 mark **3**
4.19 mark edge **3**
4.20 mark edge recording **3**
4.21 optical disk **3**
4.22 optical disk cartridge (ODC) **3**
4.23 physical track **3**
4.24 polarization **3**
4.25 pre-recorded mark **3**
4.26 read power **3**
4.27 recording layer **3**
4.28 recording track **3**
4.29 Reed-Solomon code **3**
4.30 space **3**
4.31 spindle **4**
4.32 substrate **4**
4.33 track pitch **4**
4.34 write-inhibit hole **4**
4.35 write-once functionality **4**
4.36 zone **4**

©ISO/IEC 2002 - All rights reserved

Copyright International Organization for Standardization
Reproduced by IHS under license with ISO
No reproduction or networking permitted without license from IHS
Not for Resale

5	Conventions and notations	**4**
5.1	Representation of numbers	**4**
5.2	Names	**4**
6	List of acronyms	**4**
7	General description of the optical disk cartridge	**5**
8	General requirements	**5**
8.1	Environments	**5**
8.1.1	Test environment	**5**
8.1.2	Operating environment	**5**
8.1.3	Storage environment	**6**
8.1.4	Transportation	**6**
8.2	Temperature shock	**6**
8.3	Safety requirements	**6**
8.4	Flammability	**6**
9	Reference Drive	**6**
9.1	Optical system	**7**
9.2	Optical beam	**8**
9.3	Read channels	**8**
9.4	Tracking	**8**
9.5	Rotation of the disk	**8**
Section 2 - Mechanical and physical characteristics		**9**
10	Dimensional and physical characteristics of the case	**9**
10.1	General description of the case	**9**
10.2	Relationship of Sides A and B	**9**
10.3	Reference axes and case reference planes	**9**
10.4	Case drawings	**9**
10.5	Dimensions of the case	**9**
10.5.1	Overall dimensions	**9**
10.5.2	Location hole	**10**
10.5.3	Alignment hole	**10**
10.5.4	Surfaces on Reference Planes P	**11**
10.5.5	Insertion slots and detent features	**12**
10.5.6	Gripper slots	**12**
10.5.7	Write-inhibit holes	**12**
10.5.8	Media sensor holes	**13**
10.5.9	Head and motor window	**14**
10.5.10	Shutter	**14**
10.5.11	Slot for shutter opener	**14**
10.5.12	Shutter sensor notch	**15**
10.5.13	User label areas	**15**
10.6	Mechanical characteristics	**16**
10.6.1	Materials	**16**
10.6.2	Mass	**16**
10.6.3	Edge distortion	**16**
10.6.4	Compliance	**16**
10.6.5	Shutter opening force	**16**
10.7	Drop test	**16**
11	Dimensional, mechanical and physical characteristics of the disk	**16**
11.1	General description of the disk	**16**
11.2	Reference axis and plane of the disk	**16**
11.3	Dimensions of the disk	**16**
11.3.1	Hub dimension	**17**
11.4	Mechanical characteristics	**18**

©ISO/IEC 2002 - All rights reserved
Copyright International Organization for Standardization
Reproduced by IHS under license with ISO
No reproduction or networking permitted without license from IHS
Not for Resale

11.4.1 Material **18**
11.4.2 Mass **18**
11.4.3 Moment of inertia **18**
11.4.4 Imbalance **18**
11.4.5 Axial deflection **18**
11.4.6 Axial acceleration **18**
11.4.7 Radial runout **19**
11.4.8 Radial acceleration **19**
11.4.9 Tilt **19**
11.5 Optical characteristics **19**
11.5.1 Index of refraction **19**
11.5.2 Thickness **19**
11.5.3 Birefringence **19**
11.5.4 Vertical Birefringence **19**
11.5.5 Reflectance **20**

12 Interface between cartridge and drive **20**
12.1 Clamping method **20**
12.2 Clamping force **20**
12.3 Capture cylinder **20**
12.4 Disk position in the operating condition **21**

Section 3 - Format of information **35**

13 Track and Header geometry **35**
13.1 Track and Header shape **35**
13.2 Direction of track spiral **36**
13.3 Track pitch **36**
13.4 Logical track number **36**

14 Track format **36**
14.1 Physical track layout **36**
14.2 Logical track layout **39**
14.3 Radial alignment **39**
14.4 Sector number **39**

15 Sector format **39**
15.1 Sector layout **39**
15.2 Sector Mark **40**
15.3 VFO fields **41**
15.4 Address Mark (AM) **41**
15.5 ID fields **41**
15.6 Postamble (PA_1) **42**
15.7 Transition Area (TA_1) **42**
15.8 Gap **42**
15.9 Auto Laser Power Control (ALPC) **42**
15.10 Sync **42**
15.11 Data field **43**
15.11.1 User data bytes **43**
15.11.2 CRC and ECC bytes **43**
15.11.3 Bytes for Sector Written Flag (SWF) **43**
15.11.4 Resync bytes **43**
15.12 Postamble field (PA_2) **43**
15.13 Buffer field **43**
15.14 Transition Area (TA_2) **43**

16 Recording code **44**

17 Formatted Zone **45**
17.1 General description of the Formatted Zone **45**

©ISO/IEC 2002 - All rights reserved

Copyright International Organization for Standardization
Reproduced by IHS under license with ISO
No reproduction or networking permitted without license from IHS
Not for Resale

17.2 Division of the Formatted Zone **45**
17.2.1 Lead-in Zone **46**
17.2.2 Manufacturer Zones **46**
17.2.3 User Zone **48**
17.2.4 Reflective Zone **48**
17.2.5 Control Track Zones **48**
17.3 Control Track PEP Zone **48**
17.3.1 Recording in the PEP Zone **48**
17.3.2 Format of the tracks of the PEP Zone **49**
17.4 Control Track SFP Zones **52**
17.4.1 Duplicate of the PEP information **53**
17.4.2 Media information **53**
17.4.3 System Information **54**

18 Layout of the User Zone **56**
18.1 General description of the User Zone **56**
18.2 Divisions of the User Zone **56**
18.3 User Area **56**
18.4 Defect Management Areas (DMAs) **63**
18.5 Disk Definition Structure (DDS) **64**
18.6 Rewritable Zone **66**
18.6.1 Location **67**
18.6.2 Partitioning **67**
18.7 Write Once Zone **67**
18.7.1 Location **67**
18.7.2 Partitioning **67**

19 Defect Management in the Rewritable and Write Once Zones **67**
19.1 Initialization of the disk **67**
19.2 Certification **67**
19.2.1 Slipping Algorithm **67**
19.2.2 Linear Replacement Algorithm **68**
19.3 Disks not certified **68**
19.4 Write procedure **68**
19.5 Primary Defect List (PDL) **68**
19.6 Secondary Defect List (SDL) **69**

Section 4 - Characteristics of embossed information **70**

20 Method of testing **70**
20.1 Environment **70**
20.2 Use of the Reference Drive **70**
20.2.1 Optics and mechanics **70**
20.2.2 Read power **70**
20.2.3 Read channels **71**
20.2.4 Tracking **71**
20.3 Definition of signals **71**

21 Signal from grooves **72**
21.1 Ratio of Groove to Land **72**
21.2 Push-pull signal **72**
21.3 Divided push-pull signal **73**
21.4 Track location **73**

22 Signals from Headers **73**
22.1 Sector Mark Signals **73**
22.2 VFO signals **73**
22.3 Address Mark, ID and PA signals **74**
22.4 Timing jitter **74**
22.5 Asymmetry **74**

©ISO/IEC 2002 - All rights reserved
Copyright International Organization for Standardization
Reproduced by IHS under license with ISO
No reproduction or networking permitted without license from IHS
Not for Resale

23 Signals from Control Track PEP marks **74**

Section 5 - Characteristics of the recording layer **75**

24 Method of testing **75**
24.1 Environment **75**
24.2 Reference Drive **75**
24.2.1 Optics and mechanics **75**
24.2.2 Read power **75**
24.2.3 Read Channel **75**
24.2.4 Tracking **76**
24.2.5 Signal detection for testing purposes **76**
24.3 Write conditions **76**
24.3.1 Write pulse and power **76**
24.3.2 Write magnetic field **76**
24.3.3 Pulse power determination **76**
24.3.4 Media power sensitivity **77**
24.4 Erase conditions **77**
24.4.1 Erase power **77**
24.4.2 Erase magnetic field **77**
24.5 Definition of signals **77**

25 Magneto-optical characteristics **77**
25.1 Figure of merit for magneto-optical signal **77**
25.2 Imbalance of magneto-optical signal **78**

26 Write characteristics **78**
26.1 Resolution **78**
26.2 Narrow-band signal-to-noise ratio **78**
26.3 Cross-talk ratio **79**
26.3.1 Rewritable track test method **79**
26.4 Timing Jitter **79**
26.5 Media thermal interaction **79**

27 Erase power determination **80**

Section 6 - Characteristics of user data **80**

28 Method of testing **80**
28.1 Environment **80**
28.2 Reference Drive **80**
28.2.1 Optics and mechanics **80**
28.2.2 Read power **80**
28.2.3 Read Channel **81**
28.2.4 Mark Quality **81**
28.2.5 Channel bit clock **81**
28.2.6 Binary-to-digital converters **81**
28.2.7 Error correction **81**
28.2.8 Tracking **81**

29 Minimum quality of a sector **81**
29.1 Headers **81**
29.1.1 Sector Mark **81**
29.1.2 ID fields **81**
29.2 User-written data **82**
29.2.1 Recording field **82**
29.2.2 Byte errors **82**
29.2.3 Asymmetry **82**
29.2.4 Timing jitter **82**

30 Data interchange requirements **82**

©ISO/IEC 2002 - All rights reserved

Copyright International Organization for Standardization
Reproduced by IHS under license with ISO
No reproduction or networking permitted without license from IHS
Not for Resale

30.1 Tracking **82**
30.2 User-written data **82**
30.3 Quality of disk **82**

Annexes

A - Air cleanliness class 100 000 **83**

B - Edge distortion test **84**

C - Compliance test **86**

D - Test method for measuring the adsorbent force of the hub **88**

E - CRC for ID fields **90**

F - Interleave, CRC, ECC, Resync for the data field **91**

G - Determination of Resync pattern **97**

H - Read Channel for measuring jitter **102**

J - Timing jitter measuring procedure **103**

K - Definition of write pulse shape **104**

L - Measurement of figure of merit **105**

M - Implementation Independent Mark Quality Determination (IIMQD) for the interchange of recorded media **106**

N - Requirements for interchange **108**

P - Measurement implementation for Cross-track signal **110**

Q - Asymmetry measuring definition **111**

R - Office environment **113**

S - Derivation of the operating climatic environment **114**

T - Transportation **119**

U - Sector retirement guidelines **120**

V - Track deviation measurement **121**

W - Values to be implemented in existing and future standards **125**

X - Measurement of the vertical birefringence of the substrate **126**

Y - Guidelines for the use of Type WO ODCs **128**

Z - Laser power calibration for evaluation of media power sensitivity **129**

AA - 512-byte, 1 024-byte Sector Emulation **133**

©ISO/IEC 2002 - All rights reserved
Copyright International Organization for Standardization
Reproduced by IHS under license with ISO
No reproduction or networking permitted without license from IHS
Not for Resale

Foreword

ISO (the International Organization for Standardization) and IEC (the International Electrotechnical Commission) form the specialized system for worldwide standardization. National bodies that are members of ISO or IEC participate in the development of International Standards through technical committees established by the respective organization to deal with particular fields of technical activity. ISO and IEC technical committees collaborate in fields of mutual interest. Other international organizations, governmental and non-governmental, in liaison with ISO and IEC, also take part in the work. In the field of information technology, ISO and IEC have established a joint technical committee, ISO/IEC JTC 1.

International Standards are drafted in accordance with the rules given in the ISO/IEC Directives, Part 3.

The main task of the joint technical committee is to prepare International Standards. Draft International Standards adopted by the joint technical committee are circulated to national bodies for voting. Publication as an International Standard requires approval by at least 75 % of the national bodies casting a vote.

Attention is drawn to the possibility that some of the elements of this International Standard may be the subject of patent rights. ISO and IEC shall not be held responsible for identifying any or all such patent rights.

ISO/IEC 22092 was prepared by ECMA (as ECMA-322) and was adopted, under a special “fast-track procedure”, by Joint Technical Committee ISO/IEC JTC 1, *Information technology*, in parallel with its approval by national bodies of ISO and IEC.

Annexes A to Q form a normative part of this International Standard. Annexes R to AA are for information only.

© ISO/IEC 2002 – All rights reserved

Copyright International Organization for Standardization
Reproduced by IHS under license with ISO
No reproduction or networking permitted without license from IHS
Not for Resale

Copyright International Organization for Standardization
Reproduced by IHS under license with ISO
No reproduction or networking permitted without license from IHS
Not for Resale

Information technology - Data interchange on 130 mm magneto-optical disk cartridges - Capacity: 9,1 Gbytes per cartridge

Section 1 - General

1 Scope

This International Standard specifies the mechanical, physical, and optical characteristics of a 130 mm optical disk cartridge (ODC) that employs thermo-magnetic and magneto-optical effects to enable data interchange between such disks.

This International Standard specifies two Types, viz.

Type R/W provides for data to be written, read and erased many time over the recording surface(s) of the disk.

Type WO provides for data once written to be read a multiplicity of times. Data shall not be erased nor amended. Multisession (incremental write operations) recording may be performed on type WO disks.

The disk shall be of the same Type if recorded on both sides, A and B. Each side shall have a nominal capacity of 4,58 Gbytes, irrespective of the Type. The format specifies two sector sizes and allows for emulation of two further sizes.

This International Standard specifies

- the conditions for conformance testing and the Reference Drive;
- the environments in which the cartridges are to be operated and stored;
- the mechanical, physical and dimensional characteristics of the cartridge so as to provide mechanical interchangeability between data processing systems;
- the format of the information on the disk, both embossed and user-written, including the physical disposition of the tracks and sectors, the error correction codes, the modulation methods used;
- the characteristics of the embossed information on the disk;
- the thermo-magnetic and magneto-optical characteristics of the disk, enabling processing systems to write data onto the disk;
- the minimum quality of user-written data on the disk, enabling data processing systems to read data from the disk.

This International Standard provides for interchange between optical disk drives. Together with a standard for volume and file structure it provides for full data interchange between data processing systems.

2 Conformance

2.1 Optical Disk Cartridge (ODC)

An ODC shall be in conformance with this International Standard if it meets all mandatory requirements specified therein.

A claim of conformance with this International Standard shall specify the Type implemented.

2.2 Generating system

A claim of conformance with this International Standard shall specify which of Type(s) of R/W and WO is (are) supported. A system generating an ODC for interchange shall be in conformance with this International Standard if it meets the mandatory requirements of this International Standard for the Type(s) supported.

2.3 Receiving system

A claim of conformance with this International Standard shall specify which Type is implemented.

A system receiving an ODC for interchange shall be in conformance with this International Standard if it is able to process any recording made on the cartridge according to 2.1 on the Type(s) specified.

2.4 Compatibility statement

A claim of conformance with this International Standard shall include a statement listing any other Optical Disk Cartridge Standard supported by the system for which conformance is claimed. This statement shall specify the number of the Standard(s), including, where appropriate, the ODC Type(s), or the Types of side, and whether support includes reading only or both reading and writing.

©ISO/IEC 2002 - All rights reserved

Copyright International Organization for Standardization
Reproduced by IHS under license with ISO
No reproduction or networking permitted without license from IHS Not for Resale

3 Normative reference

The following normative document contains provisions which, through reference in this text, constitute provisions of this International Standard. For dated references, subsequent amendments to, or revisions of, any of these publications do not apply. However, parties to agreements based on this International Standard are encouraged to investigate the possibility of applying the most recent edition of the normative document indicated below. For undated references, the latest edition of the normative document referred to applies. Members of ISO and IEC maintain registers of currently valid International Standards.

IEC 60950-1, *Information technology equipment — Safety — Part 1: General requirements*

4 Terms and definitions

For the purposes of this International Standard, the following terms and definitions apply.

4.1 asymmetry

The deviation between the centre levels of the signals which give maximum and minimum amplitude.

4.2 band

An annular area within the user zone on the disk having a constant clock frequency.

4.3 case

The housing for an optical disk that protects the disk and facilitates disk interchange.

4.4 clamping zone

The annular part of the disk within which the clamping force is applied by the clamping device.

4.5 control track

A track containing the information on media parameters and format necessary for writing, reading and erasing the remaining tracks on the optical disk.

4.6 Cyclic Redundancy Check (CRC)

A method for detecting errors in data.

4.7 defect management

A method for handling the defective areas on the disk.

4.8 disk reference plane

A plane defined by the perfectly flat annular surface of an ideal spindle onto which the clamping zone of the disk is clamped, and which is normal to the axis of rotation.

4.9 emulation

Technique whereby a number of lesser size logical sectors may be recorded into a single larger size physical sector.

4.10 entrance surface

The surface of the disk on to which the optical beam first impinges.

4.11 Error Correction Code (ECC)

An error-detecting code designed to correct certain kinds of errors in data.

4.12 format

The arrangement or layout of information on the disk.

4.13 hub

The central feature on the disk, which interacts with the spindle of the disk drive to provide radial centering and the clamping force.

4.14 interleaving

The process of allocating the physical sequence of units of data so as to render the data more immune to burst errors.

©ISO/IEC 2002 - All rights reserved
Copyright International Organization for Standardization
Reproduced by IHS under license with ISO
No reproduction or networking permitted without license from IHS
Not for Resale

4.15 Kerr rotation

The rotation of the plane of polarization of an optical beam upon reflection from the recording layer as caused by the magneto-optical Kerr effect.

4.16 land and groove

A trench-like feature of the disk, applied before the recording of any information, and used to define the track location. The groove is located nearer to the entrance surface than the land with which it is paired to form a track. Recording is performed on both land and groove.

4.17 logical track

A number of logical sectors that are grouped together and defined to constitute a uniquely addressable track to the recording system. The first sector of each logical track is assigned sector number 0.

4.18 mark

A feature of the recording layer which may take the form of a magnetic domain, a pit, or any other type or form that can be sensed by the optical system. The pattern of marks represents the data on the disk.

NOTE - Subdivisions of a sector which are named "mark" are not marks in the sense of this definition.

4.19 mark edge

The transition between a region with a mark and one without a mark or vice versa, along the track.

4.20 mark edge recording

A recording method which uses a mark edge to represent a Channel bit.

4.21 optical disk

A disk that will accept and retain information in the form of marks in a recording layer, that can be read with an optical beam.

4.22 optical disk cartridge (ODC)

A device consisting of a case containing an optical disk.

4.23 physical track

The path which is followed by the focus of the optical beam during one revolution of the disk. This path is not directly addressable.

4.24 polarization

The direction of polarization of an optical beam is the direction of the electric vector of the beam.

NOTE - The plane of polarization is the plane containing the electric vector and the direction of propagation of the beam. The polarization is right-handed when to an observer looking in the direction of propagation of the beam, the end-point of the electric vector would appear to describe an ellipse in the clockwise sense.

4.25 pre-recorded mark

A mark so formed as to be unalterable by magneto-optical means.

4.26 read power

The read power is the optical power, incident at the entrance surface of the disk, used when reading.

4.27 recording layer

A layer of the disk on, or in, which data is written during manufacture and/or use.

4.28 recording track

Either a land or groove feature of the disk where recording may be performed.

4.29 Reed-Solomon code

An error detection and/or correction code which is particularly suited to the correction of errors which occur in bursts or are strongly correlated.

4.30 space

The area between marks along the track.

©ISO/IEC 2002 - All rights reserved

Copyright International Organization for Standardization
Reproduced by IHS under license with ISO
No reproduction or networking permitted without license from IHS
Not for Resale

4.31 spindle

The part of the disk drive which contacts the disk and/or hub.

4.32 substrate

A transparent layer of the disk, provided for mechanical support of the recording layer, through which the optical beam accesses the recording layer.

4.33 track pitch

The distance between land track centrelines to adjacent groove track centerlines, measured in a radial direction.

4.34 write-inhibit hole

A hole in the case which, when detected by the drive to be open, inhibits both write and erase operations.

4.35 write-once functionality

A technique whereby a rewritable MO ODC is restricted to initialization and writing once only.

4.36 zone

An annular area of the disk.

5 Conventions and notations

5.1 Representation of numbers

A measured value is rounded off to the least significant digit of the corresponding specified value. It implies that a specified value of 1,26 with a positive tolerance of +0,01, and a negative tolerance of -0,02 allows a range of measured values from 1,235 to 1,275.

Letters and digits in parentheses represent numbers in hexadecimal notation.

The setting of a bit is denoted by ZERO or ONE.

Numbers in binary notation and bit combinations are represented by strings of the digits 0 and 1.

Numbers in binary notation and bit combinations are shown with the most significant bit to the left.

Negative values of numbers in binary notation are given in TWO's complement.

In each field the data is recorded so that the most significant byte (byte 0) is recorded first. Within each byte the least significant bit is numbered 0 and is recorded last, the most significant bit (numbered 7 in an 8-bit byte) is recorded first. This order of recording applies also to the data input of the Error Detection and Correction circuits and their output.

Unless otherwise stated, groups of decimal digits of the form xx ... x/yy ... y indicate that the value xx ... x applies to 4 096-byte sectors, yy ... y applies to 2 048-byte sectors.

5.2 Names

The names of entities, e.g. specific tracks, fields, etc., are given with a capital initial.

6 List of acronyms

ALPC	Auto Laser Power Control
AM	Address Mark
CRC	Cyclic Redundancy Code
DDS	Disk Definition Structure
DMA	Defect Management Area
DMP	Defect Management Pointers
ECC	Error Correction Code
EDAC	Error Detection And Correction
ID	Identifier
LBA	Logical Block Address
LSB	Least Significant Byte
MO	Magneto-Optical
MSB	Most Significant Byte
ODC	Optical Disk Cartridge

©ISO/IEC 2002 - All rights reserved
Copyright International Organization for Standardization
Reproduced by IHS under license with ISO
No reproduction or networking permitted without license from IHS
Not for Resale

PA	Postamble
PDL	Primary Defect List
PEP	Phase-Encoded Part of the Control Tracks
RLL	Run Length Limited (code)
R-S	Reed-Solomon (code)
R/W	Rewritable
R-S/LDC	Reed-Solomon Long Distance Code
SCSI	Small Computer System Interface
SDL	Secondary Defect List
SFP	Standard Formatted Part of the Control Tracks
SM	Sector Mark
SWF	Sector Written Flag
TA	Transition Area
TIA	Time Interval Analyzer
VFO	Variable Frequency Oscillator
WO	Write Once
ZCAV	Zoned Constant Angular Velocity

7 General description of the optical disk cartridge

The optical disk cartridge which is the subject of this International Standard consists of a case containing an optical disk.

The case is a protective enclosure for the disk. It has access windows covered by a shutter. The windows are automatically uncovered by the drive when the cartridge is inserted into it.

The optical disk consists of two sides assembled together with their recording layers on the inside.

The optical disk may be recordable on both sides. Data can be written onto the disk as marks in the form of magnetic domains in the recording layer and can be erased from it with a focused optical beam, using the thermo-magnetic effect. The data can be read with a focused optical beam, using the magneto-optical effect. The beam accesses the recording layer through the transparent substrate of the disk.

Part of the disk contains read-only data in the form of pre-embossed pits. This data can be read using the diffraction of the optical beam by the embossed pits.

The entire disk may be used for write once recording of data using the thermo-magnetic effect. This data can be read using the magneto-optic effect.

8 General requirements

8.1 Environments

8.1.1 Test environment

The test environment is the environment where the air immediately surrounding the optical disk cartridge has the following properties:

temperature	: 23 °C ± 2 °C
relative humidity	: 45 % to 55 %
atmospheric pressure	: 60 kPa to 106 kPa
air cleanliness	: Class 100 000 (see annex A)

No condensation on or in the optical disk cartridge shall occur. Before testing, the optical disk cartridge shall be conditioned in this environment for 48 hours minimum. It is recommended that, before testing, the entrance surface of the disk be cleaned according to the instructions of the manufacturer of the disk.

Unless otherwise stated, all tests and measurements shall be made in this test environment.

8.1.2 Operating environment

This International Standard requires that an optical disk cartridge which meets all requirements of this Standard in the specified test environment provides data interchange over the specified ranges of environmental parameters in the operating environment. (See also annex R.)

©ISO/IEC 2002 - All rights reserved

Copyright International Organization for Standardization
Reproduced by IHS under license with ISO
No reproduction or networking permitted without license from IHS
Not for Resale

The operating environment is the environment where the air immediately surrounding the optical disk cartridge has the following properties:

temperature	: 5 °C to 55 °C
relative humidity	: 3 % to 85 %
absolute humidity	: 1 g/m^3 to 30 g/m^3
atmospheric pressure	: 60 kPa to 106 kPa
temperature gradient	: 10 °C/h max.
relative humidity gradient	: 10 %/h max.
air cleanliness	: office environment (see also annex R.1)
magnetic field strength at the recording layer for any condition under which a beam is in focus	: 32 000 A/m max. (see also annex R.2)
magnetic field strength at the recording layer during any other condition	: 48 000 A/m max.

No condensation on or in the optical disk cartridge shall occur. If an optical disk cartridge has been exposed to conditions outside those specified in this clause, it shall be acclimatized in an allowed operating environment for at least 2 hours before use. (See also annex S).

8.1.3 Storage environment

The optical disk cartridge without any protective enclosure shall not be stored in an environment outside the range allowed for storage. The storage environment is defined as an environment where the air immediately surrounding the optical disk cartridge has the following properties:

temperature	: -10 °C to 55 °C
relative humidity	: 3 % to 90 %
absolute humidity	: 1 g/m^3 to 30 g/m^3
atmospheric pressure	: 60 kPa to 106 kPa
temperature gradient	: 15 °C/h max.
relative humidity gradient	: 10 %/h max.
air cleanliness	: Office environment (see also annex R.1)
magnetic field strength at the recording layer	: 48 000 A/m max.

No condensation on or in the optical disk cartridge shall occur.

8.1.4 Transportation

This International Standard does not specify requirements for transportation; guidance is given in annex T.

8.2 Temperature shock

The optical disk cartridge shall withstand a temperature shock of up to 20 °C when inserted into, or removed from, the drive.

8.3 Safety requirements

The cartridge shall satisfy the safety requirements of IEC 60950, when used in the intended manner or in any foreseeable use in an information processing system.

8.4 Flammability

The cartridge and its components shall be made from materials that comply with the flammability class for HB materials, or better, as specified in IEC 60950.

9 Reference Drive

The Reference Drive is a drive several critical components of which have well defined properties and which is used to test the write, read and erase parameters of the disk for conformance to this International Standard. The critical components vary from

©ISO/IEC 2002 - All rights reserved
Copyright International Organization for Standardization
Reproduced by IHS under license with ISO
No reproduction or networking permitted without license from IHS
Not for Resale

test to test. This clause gives an outline of all components; components critical for tests in specific clauses are specified in those clauses.

9.1 Optical system

The basic set-up of the optical system of the Reference Drive used for measuring the write, read and erase parameters is shown in figure 1. Different components and locations of components are permitted, provided that the performance remains the same as that of the set-up in figure 1. The optical system shall be such that the detected light reflected from the entrance surface of the disk is minimized so as not to influence the accuracy of the measurements.

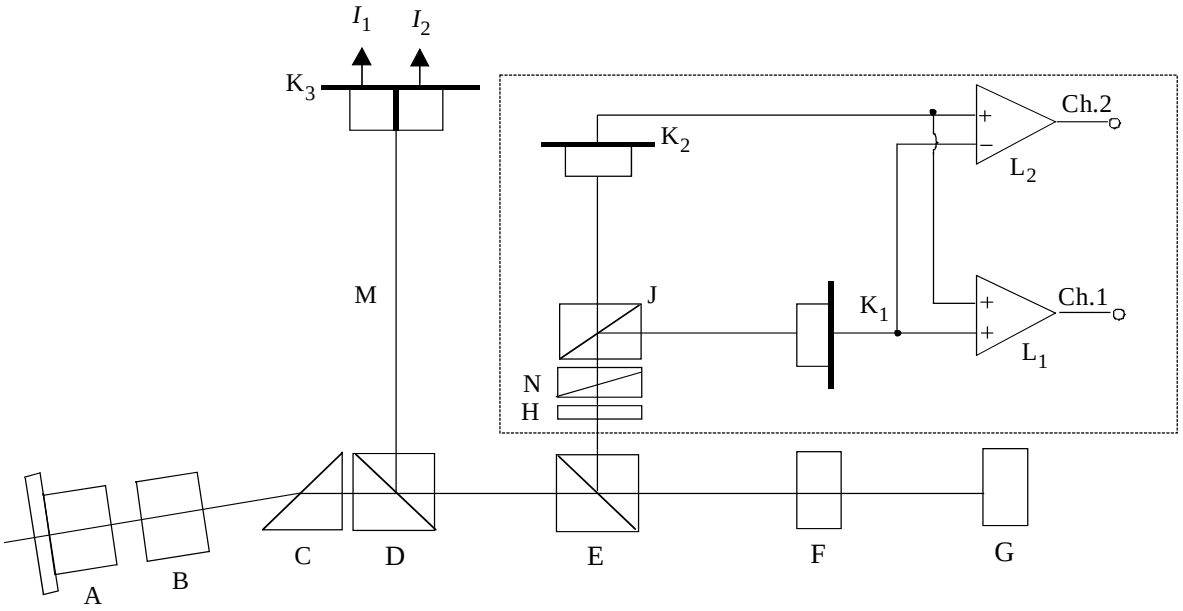

A	Laser diode	G	Optical disk
B	Collimator lens	H	Optional half-wave plate
C	Optional shaping prism	I_1, I_2	Tracking signals from photodiode K_3
Ch.1	Channel 1	J	Polarizing beam splitter
Ch.2	Channel 2	K_1, K_2	Photodiodes for Channels 1 and 2
D	Beam splitter	K_3	Split photodiode
E	Polarizing beam splitter	L_1, L_2	d.c.-coupled amplifiers
F	Objective lens	M	Tracking Channel (see 20.3)
N	Phase retarder		

Figure 1 - Optical system of the Reference Drive

In the absence of polarization changes in the disk, the polarizing beam splitter J shall be aligned to make the signal of detector K_1 equal to that of detector K_2. The direction of polarization in this case is called the neutral direction. The phase retarder N shall be adjusted such that the optical system does not have more than 2,5° phase retardation between the neutral polarization and the polarization perpendicular to it. This position of the retarder is called the neutral position.

The phase retarder can be used for the measurement of the narrow-band signal-to-noise ratio (see 27.2).

The beam splitter J shall have a p-s intensity reflectance ratio of at least 100.

The beam splitter E shall have an intensity reflectance R_p from F to H of nominally 0,30 for the neutral polarization direction. The reflectance R_s for the polarization perpendicular to the neutral direction shall be nominally 0,95. The actual value of R_s shall not be smaller than 0,90.

©ISO/IEC 2002 - All rights reserved

Copyright International Organization for Standardization
Reproduced by IHS under license with ISO
No reproduction or networking permitted without license from IHS
Not for Resale

The imbalance of the magneto-optical signal is specified for a beam splitter with nominal reflectance. If the measurement is made on a drive with reflectance's R_p' and R_s' for beam splitter E, then the measured imbalance shall be multiplied by

$$\sqrt{\frac{R_s R_p'}{R_p R_s'}}$$

to make it correspond to the nominal beam splitter E.

The output of Channel 1 is the sum of the currents through photodiodes K_1 and K_2 , and is used for reading embossed marks. The output of Channel 2 is the difference between photo-diode currents, and is used for reading user-written marks with the magneto-optical effect.

9.2 Optical beam

The focused optical beam used for writing, reading and erasing data shall have the following properties:

a)	Wavelength (λ)	$660\ \text{nm}^{+10\ \text{nm}}_{-10\ \text{nm}}$
b)	Wavelength (λ) divided by the numerical aperture of the objective lens (NA)	λ / NA = 1,148 µm ± 0,017 µm
c)	Filling D/W of the aperture of the objective lens	0,85 ± 0,05
d)	Variance of the wavefront of the optical beam near the recording layer after passing through a substrate having nominal thickness and index of refraction	0 to λ^2/ 330
e)	Polarization	Linear - parallel to the groove where appropriate
f)	Extinction ratio	0,01 max.
g)	The optical power and pulse width for writing, reading and erasing are specified in later clauses of this Standard.	

D is the diameter of the lens aperture and W is the beam diameter of the Gaussian beam where the intensity is $1/e^2$ of the maximum intensity.

The extinction ratio is the ratio of the minimum over the maximum power observed behind a linear polarizer in the optical beam, which is rotated over at least 180°.

9.3 Read channels

Two read channels shall be provided to generate signals from the marks in the recording layer. Channel 1 shall be used for reading the embossed marks, using the diffraction of the optical beam by the marks. Channel 2 shall be used for reading the written marks, using the rotation of the polarization of optical beam due to the magneto-optical effect of the marks. The read amplifiers after the photo-detectors in Channel 1 and Channel 2 shall have a flat response within 1dB from d.c. to 50 MHz.

Unless otherwise stated, the signal of Channel 1 and 2 are not equalized before detection. The signal from both channels shall be low-pass filtered with a 3-pole Butterworth filter with a cut-off frequency of one half the Channel clock frequency.

9.4 Tracking

The Tracking Channel of the drive provides the tracking error signals to control the servos for the axial and radial tracking of the optical beam. The method of generating the axial tracking error is not specified for the Reference Drive. The radial tracking error is generated by a split photodiode detector in the tracking Channel. The division of the diode runs parallel to the image of the tracks on the diode.

The requirements for the accuracy with which the focus of the optical beam must follow the tracks is specified in 20.2.4.

9.5 Rotation of the disk

The spindle shall position the disk as specified in 12.4. It shall rotate the disk at 50,0 Hz ± 0,5 Hz. The direction of rotation of the disk side being tested shall be counter-clockwise when viewed from the objective lens.

©ISO/IEC 2002 - All rights reserved
Copyright International Organization for Standardization
Reproduced by IHS under license with ISO
No reproduction or networking permitted without license from IHS
Not for Resale

Section 2 - Mechanical and physical characteristics

10 Dimensional and physical characteristics of the case

10.1 General description of the case

The case (see figure 3) is a rigid protective container of rectangular shape. It has spindle windows on both sides to allow the spindle of the drive to clamp the disk by its hub. Both sides of the case have a head window, one for the optical head of the drive, the other for the magnetic head providing the necessary magnetic fields. A shutter uncovers the windows upon insertion into the drive, and automatically covers them upon removal from the drive. The case has write-inhibit, reflectance detection, and rotation direction detection features, and gripper slots for an autochanger.

10.2 Relationship of Sides A and B

The features essential for physical interchangeability are represented in figure 3. When Side A of the cartridge faces upwards, Side A of the disk faces downwards. Sides A and B of the case are identical as far as the features given here are concerned, except as noted below. The description is given for one side only. References to Sides A and B can be changed to B or A respectively.

Only the shutter and the slot for the shutter opener, described in 10.5.10 and 10.5.11, are not identical for both sides of the case.

10.3 Reference axes and case reference planes

There is a reference plane P for each side of the case. Each reference plane P contains two orthogonal axes X and Y to which the dimensions of the case are referred. The intersection of the X and Y axes defines the centre of the location hole. The X axis extends through the centre of the alignment hole.

10.4 Case drawings

The case is represented schematically by the following drawings.

Figure 2 shows the hub dimensions.

Figure 3 shows a composite drawing of Side A of the case in isometric form, with the major features identified from Side A.

Figure 4 shows the envelope of the case with respect to a location hole at the intersection of the X and Y axes and reference plane P.

Figure 5 shows the surfaces S1, S2, S3 and S4 which establish the reference plane P.

Figure 5a shows the details of surface S3.

Figure 6 shows the details of the insertion slot and detent.

Figure 7 shows the gripper slots, used for automatic handling.

Figure 8 shows the write-inhibit holes.

Figure 9 shows the media ID sensor holes.

Figure 10 shows the shutter sensor notch.

Figure 11 shows the head and motor window.

Figure 12 shows the shutter opening features.

Figure 13 shows the capture cylinder.

Figure 14 shows the user label areas.

10.5 Dimensions of the case

The dimensions of the case shall be measured in the test environment. The dimensions of the case in an operating environment can be estimated from the dimensions specified in this clause.

10.5.1 Overall dimensions

The total length of the case (see figure 4) shall be

$L_1 = 153{,}0 \text{ mm} \pm 0{,}4 \text{ mm}$

©ISO/IEC 2002 - All rights reserved

Copyright International Organization for Standardization
Reproduced by IHS under license with ISO
No reproduction or networking permitted without license from IHS
Not for Resale

The distance from the top of the case to the reference axis X shall be

L_2 = 127,0 mm ± 0,3 mm

The distance from the bottom of the case to the reference axis X shall be

L_3 = 26,0 mm ± 0,3 mm

The total width of the case shall be

$L_4 = 135{,}0\ \text{mm}\ {}^{+\ 0{,}0\ \text{mm}}_{-\ 0{,}6\ \text{mm}}$

The distance from the left-hand side of the cartridge to the reference axis Y shall be

$L_5 = 128{,}5\ \text{mm}\ {}^{+\ 0{,}0\ \text{mm}}_{-\ 0{,}5\ \text{mm}}$

The distance from the right-hand side of the cartridge to the reference axis Y shall be

L_6 = 6,5 mm ± 0,2 mm

The width shall be reduced on the top by the radius

$R_1 = L_4$

originating from a point defined by L_5 and

L_7 = 101,0 mm ± 0,3 mm

The two corners of the top shall be rounded with a radius

R_2 = 1,5 mm ± 0,5 mm

and the two corners at the bottom with a radius

R_3 = 3,0 mm ± 1,0 mm

The thickness of the case shall be

L_8 = 11,00 mm ± 0,30 mm

The eight long edges of the case shall be rounded with a radius

R_4 = 1,0 mm max

10.5.2 Location hole

The centre of the location hole (see figure 4) shall coincide with the intersection of the reference axes X and Y. It shall have a square form with a side length of

$L_9 = 4{,}10\ \text{mm}\ {}^{+\ 0{,}00\ \text{mm}}_{-\ 0{,}06\ \text{mm}}$

held to a depth of

L_{10} = 1,5 mm (i.e. typical wall thickness)

after which a cavity extends through to the alignment hole on the opposite side of the case.

The lead-in edges shall be rounded with a radius

R_5 = 0,5 mm max

10.5.3 Alignment hole

The centre of the alignment hole (see figure 4) shall lie on reference axis X at a distance of

L_{11} = 122,0 mm ± 0,2 mm

from the reference axis Y.

The dimensions of the hole shall be

©ISO/IEC 2002 - All rights reserved
Copyright International Organization for Standardization
Reproduced by IHS under license with ISO
No reproduction or networking permitted without license from IHS
Not for Resale

$$L_{12} = 4{,}10\ \text{mm}\ {}^{+\ 0{,}00\ \text{mm}}_{-\ 0{,}06\ \text{mm}}$$

and

$$L_{13} = 5{,}0\ \text{mm}\ {}^{+\ 0{,}2\ \text{mm}}_{-\ 0{,}0\ \text{mm}}$$

held to a depth of L_{10}, after which a cavity extends through to the location hole on the opposite side of the case.

The lead-in edges shall be rounded with radius R_5.

10.5.4 Surfaces on Reference Planes P

The reference plane P (see figures 5 and 5a) for a side of the case shall contain four surfaces (S_1, S_2, S_3 and S_4) on that side of the case, specified as follows:

Two circular surfaces S_1 and S_2.

Surface S_1 shall be a circular area centred around the square location hole and have a diameter of

$D_1 = 9{,}0$ mm min

Surface S_2 shall be a circular area centred around the rectangular alignment hole and have a diameter of

$D_2 = 9{,}0$ mm min

Two elongated surfaces S_3 and S_4, that follow the contour of the cartridge and shutter edges.

Surfaces S_3 and S_4 are shaped symmetrically.

Surface S_3 shall be defined by two circular sections with radii

$R_6 = 1{,}5\ \text{mm} \pm 0{,}1\ \text{mm}$

with an origin given by

$L_{14} = 4{,}0\ \text{mm} \pm 0{,}1\ \text{mm}$

$L_{15} = 86{,}0\ \text{mm} \pm 0{,}3\ \text{mm}$

and

$R_7 = 1{,}5\ \text{mm} \pm 0{,}1\ \text{mm}$

with an origin given by

$L_{16} = 1{,}9\ \text{mm} \pm 0{,}1\ \text{mm}$

$L_{17} = 124{,}5\ \text{mm} \pm 0{,}3\ \text{mm}$

The arc with radius R_7 shall continue on the right hand side with radius

$$R_8 = 134{,}0\ \text{mm}\ {}^{+\ 0{,}2\ \text{mm}}_{-\ 0{,}7\ \text{mm}}$$

which is a dimension resulting from $L_5 + L_{14} + R_6$ with an origin given by L_5 and L_7. A straight, vertical line shall smoothly join the arc of R_6 to the arc of R_8.

The left-hand side of S_3 shall be bounded by radius

$R_9 = 4{,}5\ \text{mm} \pm 0{,}3\ \text{mm}$

which is a dimension resulting from $L_{18} + L_{14} - R_6$ with an origin given by

$L_{18} = 2{,}0\ \text{mm} \pm 0{,}1\ \text{mm}$

$L_{19} = 115{,}5\ \text{mm} \pm 0{,}3\ \text{mm}$

The left-hand side of the boundary shall be closed by two straight lines. The first one shall smoothly join the arc of R_6 to the arc of R_9. The second one shall run from the left hand tangent of R_7 to its intersection with R_9. Along the left hand side of

--`,,`,,`-`-`,,`,,`,`,,`---

©ISO/IEC 2002 - All rights reserved

Copyright International Organization for Standardization
Reproduced by IHS under license with ISO
No reproduction or networking permitted without license from IHS
Not for Resale

surface S_3 there shall be a zone to protect S_3 from being damaged by the shutter. In order to keep this zone at a minimum practical width

R_{10} = 4,1 mm max

This radius originates from the same point as R_9.

10.5.5 Insertion slots and detent features

The case shall have two symmetrical insertion slots with embedded detent features (see figure 6). The slots shall have a length of

L_{20} = 26,0 mm ± 0,3 mm

a width of

$L_{21} = 6{,}0\ \text{mm}\ {}^{+\ 0{,}3\ \text{mm}}_{-\ 0{,}0\ \text{mm}}$

and a depth of

L_{22} = 3,0 mm ± 0,1 mm

located

L_{23} = 2,5 mm ± 0,2 mm

from reference plane P.

The slots shall have a lead-in chamfer given by

L_{24} = 0,5 mm max

L_{25} = 5,0 mm max

The detent notch shall be a semi-circle of radius

R_{11} = 3,0 mm ± 0,2 mm

with the origin given by

L_{26} = 13,0 mm ± 0,3 mm

L_{27} = 2,0 mm ± 0,1 mm

L_{73} = 114,0 mm ± 0,3 mm

The dimensions L_2, L_{26}, and L_{73} are interrelated, their values shall be such so that they are all three within specification.

10.5.6 Gripper slots

The case shall have two symmetrical gripper slots (see figure 7) with a depth of

L_{28} = 5,0 mm ± 0,3 mm

from the edge of the case and a width of

L_{29} = 6,0 mm ± 0,3 mm

The upper edge of a slot shall be

L_{30} = 12,0 mm ± 0,3 mm

above the bottom of the case.

10.5.7 Write-inhibit holes

Sides A and B shall each have a write-inhibit hole (see figure 8). The case shall include a device for opening and closing each hole. The hole at the left-hand side of Side A of the case, is the write-inhibit hole for Side A of the disk. The protected side of the disk shall be made clear by inscriptions on the case or by the fact that the device for Side A of the disk can only be operated from Side A of the case.

When writing and erasing on Side A of the disk is not allowed, the write-inhibit hole shall be open all through the case. It shall have a diameter

--`,,`,,`-`-`,,`,,`,`,,`---

©ISO/IEC 2002 - All rights reserved
Copyright International Organization for Standardization
Reproduced by IHS under license with ISO
No reproduction or networking permitted without license from IHS
Not for Resale

D_3 = 4,0 mm min

Its centre shall be specified by

L_{31} = 8,0 mm ± 0,2 mm

L_{32} = 111,0 mm ± 0,3 mm

on Side A of the case.

When writing is allowed on Side A of the disk, the write-inhibit hole shall be closed on Side A of the case, at a depth of typically L_{10}, i.e. the wall thickness of the case. In this state, the opposite side of the same hole, at Side B of the case, shall be closed and not recessed from the reference plane P of Side B of the case by more than

L_{33} = 0,5 mm

The opposite side of the write-inhibit hole for protecting Side B of the disk shall have a diameter D_3. Its centre shall be specified by L_{31} and

L_{34} = 11,0 mm ± 0,2 mm

on Side A of the case.

10.5.8 Media sensor holes

There shall be two sets of four media sensor holes (see figure 9). The set of holes at the lower left hand corner of Side A of the case pertains to Side A of the disk. The holes shall extend through the case, and have a diameter of

$D_4 = 4{,}0\ \text{mm}\ {}^{+\ 0{,}3\ \text{mm}}_{-\ 0{,}0\ \text{mm}}$

the positions of their centres shall be specified by L_{32}, L_{34} and

L_{35} = 19,5 mm ± 0,2 mm

L_{36} = 17,0 mm ± 0,2 mm

L_{37} = 23,0 mm ± 0,2 mm

L_{38} = 29,0 mm ± 0,2 mm

L_{39} = 93,0 mm ± 0,3 mm

L_{40} = 99,0 mm ± 0,3 mm

L_{41} = 105,0 mm ± 0,3 mm

A hole is deemed to be open when there is no obstruction in this hole over a diameter D_4 all through the case.

A hole for Side A of the disk is deemed to be closed, when the hole is closed on both Side A and Side B of the case. The closure shall be recessed from reference plane P by

L_{42} = 0,1 mm max

The holes are numbered consecutively from 1 to 4. Number 1 is the hole closest to the left hand edge of the case.

Holes No. 1, 3, and 4 shall be closed.

Hole No. 2 shall indicate whether Side B shall not be used, in which case the hole shall be open. When Side B shall be used, the hole shall be closed.

An optical disk cartridge conforming to this Standard does not use holes No. 3 and 4. The holes shall be closed. The meaning of the each hole shall be as in table 1.

©ISO/IEC 2002 - All rights reserved

Copyright International Organization for Standardization
Reproduced by IHS under license with ISO
No reproduction or networking permitted without license from IHS
Not for Resale

Table 1 - Media sensor holes

Sensor hole No.	Indication	Closed	Open
1	Not used	Always	-
2	Disk side accessible	Yes	No
3	Not used	Always	-
4	Not used	Always	-

10.5.9 Head and motor window

The case shall have a window on each side to enable the optical head and the motor to access the disk (see figure 11). The dimensions are referenced to a centreline, located at a distance of

L_{46} = 61,0 mm ± 0,2 mm

to the left of reference axis Y.

The width of the head access shall be

L_{47} = 20,00 mm min

L_{48} = 20,00 mm min

and its height shall extend from

L_{49} = 118,2 mm min to

L_{50} = 57,0 mm max

The four inside corners shall be rounded with a radius of

R_{12} = 3,0 mm max

The motor access shall have a diameter of

D_5 = 35,0 mm min

and its centre shall be defined by L_{46} and

L_{51} = 43,0 mm ± 0,2 mm

10.5.10 Shutter

The case shall have a spring-loaded, unidirectional shutter (see figure 12) with an optional latch, designed to completely cover the head and motor windows when closed. A shutter movement of 41,5 mm minimum shall be sufficient to ensure that the head and motor window is opened to the minimum size specified in 10.5.9. The shutter shall be free to slide in a recessed area of the case in such a way as to ensure that the overall thickness of the case and shutter shall not exceed L_8.

The right-hand side of the top of the shutter shall have a lead-in ramp with an angle

A_2 = 16° max

The distance from the reference planes P to the nearest side of the ramp shall be

L_{52} = 2,5 mm max

The left hand side of the shutter shall not extend closer than

L_{52B} = 14,0 mm min

to the datum plane.

10.5.11 Slot for shutter opener

The shutter shall have only one slot (see figure 12) in which the shutter opener of the drive can engage to open the shutter. The slot shall be dimensioned as follows:

When the shutter is closed, the vertical edge used to push the shutter open shall be located at a distance of

©ISO/IEC 2002 - All rights reserved
Copyright International Organization for Standardization
Reproduced by IHS under license with ISO
No reproduction or networking permitted without license from IHS
Not for Resale

L_{53} = 34,5 mm ± 0,5 mm

from reference axis Y on Side B of the case.

The length of the slot shall be

L_{54} = 4,5 mm ± 0,1 mm

and the angle of the lead-out ramp shall be

A_3 = 52,5° ± 7,5°

The depth of the slot shall be

L_{55} = 3,5 mm ± 0,1 mm

The width of the slot from the reference plane P of Side B of the case shall be

L_{56} = 6,0 mm $^{+\ 0,5\ mm}_{-\ 0,0\ mm}$

If a shutter latch is employed, the distance between the latch and reference plane P of Side B of the case shall be

L_{57} = 2,5 mm max

The edges of the case beneath the shutter, upon which the shutter door opening mechanism may slide, shall have a thickness of

B_1 = 1,0 mm min

located at

B_2 = 0,9 mm max

from plane P (see detail A in figure 12).

The four edges shall also be straight to within

STR (straightness of surface) = 0,2 mm

in both planes for length C_1. (Length C_1 is defined by the manufacturer's shutter design. See detail in figure 12.)

10.5.12 Shutter sensor notch

The shutter sensor notch (see figure 10) is used to ensure that the shutter is fully open after insertion of the optical disk cartridge into the drive. Therefore, the notch shall be exposed only when the shutter is fully open.

The dimensions shall be

L_{43} = 3,5 mm ± 0,2 mm

L_{44} = 71,0 mm ± 0,3 mm

and

L_{45} = 9,0 mm $^{+\ 0,0\ mm}_{-\ 2,0\ mm}$

The notch shall have a lead-out ramp with an angle

A_1 = 45° ± 2°

10.5.13 User label areas

The case shall have the following minimum areas for user labels (see figure 14):

on Side A and Side B: 35,0 mm x 65,0 mm

on the bottom side: 6,0 mm x 98,0 mm

These areas shall be recessed by 0,2 mm min. Their positions are specified by the following dimensions and relations between dimensions.

L_{61} = 4,5 mm min

©ISO/IEC 2002 - All rights reserved

Copyright International Organization for Standardization
Reproduced by IHS under license with ISO
No reproduction or networking permitted without license from IHS
Not for Resale

L_{62} - L_{61} = 65,0 mm min

L_{64} - L_{63} = 35,0 mm min

L_{65} = 4,5 mm min

L_{66} - L_{65} = 65,0 mm min

L_{67} + L_{68} = 35,0 mm min

L_8 - L_{71} - L_{72} = 6,0 mm min

L_4 - L_{69} - L_{70} = 98,0 mm min

10.6 Mechanical characteristics

All requirements of this clause shall be met in the operating environment.

10.6.1 Materials

The case shall be constructed from any suitable materials such that it meets the requirements of this International Standard.

10.6.2 Mass

The mass of the case without the optical disk shall not exceed 150 g.

10.6.3 Edge distortion

The cartridge shall meet the requirement of the edge distortion test defined in annex B.

10.6.4 Compliance

The cartridge shall meet the requirement of the compliance (flexibility) test defined in annex C. The requirement guarantees that a cartridge can be constrained in the proper plane of operation within the drive.

10.6.5 Shutter opening force

The spring force on the shutter shall be such that the force required to open the shutter does not exceed 3N. It shall be sufficiently strong to close a free-sliding shutter, irrespective of the orientation of the case.

10.7 Drop test

The optical disk cartridge shall withstand dropping on each surface and on each corner from a height of 760 mm on to a concrete floor covered with a vinyl layer 2 mm thick. The cartridge shall withstand all such impacts without any functional failure.

11 Dimensional, mechanical and physical characteristics of the disk

11.1 General description of the disk

The disk shall consist of two sides.

Each disk side shall consist of a circular substrate with a hub on one face and a recording layer coated on the other face. The recording layer can be protected from environmental influences by a protective layer. The Formatted Zone (see clause 17) of the substrate shall be transparent to allow an optical beam to focus on the recording layer through the substrate.

The two disk sides shall be assembled with the recording layer facing inwards.

The circular hubs are in the centre of the disk. They interact with the spindle of the drive, and provide the radial centering of the clamping force.

11.2 Reference axis and plane of the disk

Some dimensions of the hub are referenced to the Disk Reference Plane D (see figure 2). Disk Reference Plane D is defined as being parallel and coplanar with a perfectly flat annular mounting surface of an ideal spindle onto which the disk substrate interfaces, and which is normal to the axis of rotation of the spindle. This axis A passes through the centre of the centre hole of the hub, and is normal to Disk Reference Plane D.

11.3 Dimensions of the disk

The dimensions of the disk shall be measured in the test environment. The dimensions of the disk in an operating environment can be estimated from the dimensions specified in this clause.

©ISO/IEC 2002 - All rights reserved
Copyright International Organization for Standardization
Reproduced by IHS under license with ISO
No reproduction or networking permitted without license from IHS
Not for Resale

The outer diameter of the disk shall be 130,0 mm nominal. The tolerance is determined by the movement of the disk inside the case allowed by 12.3 and 12.4.

The total thickness of the disk outside the hub area shall be 2,40 mm min. and 2,80 mm max.

NOTE - Disks that conform to ISO/IEC 10089 and ISO/IEC 15486 are known to exist which have a total thickness of 3,2 mm.

The clamping zone is the area on the disk where the clamping mechanism of the optical drive grips the disk and is defined by D_6 and D_7.

The clearance zone is the area between the outer diameter of the clamping zone D_6 and the inner diameter of the reflective zone (see clause 17).

The clearance zone shall be excluded from the total thickness requirement, however there shall be no projection from the Disk Reference Plane D in the direction of the optical system of more than 0,2 mm in this zone.

11.3.1 Hub dimension

The outer diameter of the hub (see figure 2) shall be

$$D_8 = 25{,}0 \text{ mm} \begin{matrix} +\,0{,}0 \text{ mm} \\ -\,0{,}2 \text{ mm} \end{matrix}$$

The height of the hub shall be

$$h_1 = 2{,}2 \text{ mm} \begin{matrix} +\,0{,}0 \text{ mm} \\ -\,0{,}2 \text{ mm} \end{matrix}$$

The diameter of the centre hole of the hub shall be

$$D_9 = 4{,}004 \text{ mm} \begin{matrix} +\,0{,}012 \text{ mm} \\ -\,0{,}000 \text{ mm} \end{matrix}$$

The height of the top of the centering hole at diameter D_9, measured above the Disk Reference Plane D, shall be

h_2 = 1,9 mm min

The centering length at diameter D_9 shall be

h_3 = 0,5 mm min

The hole shall have a diameter larger than, or equal to, D_9 between the centering length and the Disk Reference Plane D. The hole shall extend through the substrate.

There shall be a radius at the rim of the hub at diameter D_9 with height

h_4 = 0,2 mm ± 0,1 mm

At the two surfaces which it intersects, the radius shall be blended to prevent offsets or sharp ridges.

The height of the chamfer at the rim of the hub at diameter D_8 shall be

$$h_5 = 0{,}2 \text{ mm} \begin{matrix} +\,0{,}2 \text{ mm} \\ -\,0{,}0 \text{ mm} \end{matrix}$$

The angle of the chamfer shall be 45°, or a corresponding full radius shall be used.

The outer diameter of the magnetizable ring shall be

D_{10} = 19,0 mm min

The inner diameter of the magnetizable ring shall be

D_{11} = 8,0 mm max

This thickness of the magnetizable material shall be

h_6 = 0,5 mm min

The position of the top of the magnetizable ring relative to the Disk Reference Plane D shall be

©ISO/IEC 2002 - All rights reserved

Copyright International Organization for Standardization
Reproduced by IHS under license with ISO
No reproduction or networking permitted without license from IHS
Not for Resale

$h_7 = 2{,}2 \text{ mm}^{+0{,}0 \text{ mm}}_{-0{,}1 \text{ mm}}$

The outer diameter of the clamping zone shall be

$D_6 = 35{,}0$ mm min

The inner diameter of the zone shall be

$D_7 = 27{,}0$ mm max

11.4 Mechanical characteristics

All requirements in this clause must be met in the operating environment.

11.4.1 Material

The disk shall be made from any suitable materials such that it meets the requirements of this International Standard. The only material properties specified by this International Standard are the magnetic properties of the magnetizable zone in the hub (see 11.3.1) and the optical properties of the substrate in the Formatted Zone (see 11.5).

11.4.2 Mass

The mass of the disk shall not exceed 120 g.

11.4.3 Moment of inertia

The moment of inertia of the disk relative to axis A shall not exceed 0,22 g·m^2.

11.4.4 Imbalance

The imbalance of the disk relative to axis A shall not exceed 0,01 g·m.

11.4.5 Axial deflection

The axial deflection of the disk is measured as the axial deviation of the recording layer. Thus it comprises the tolerances on the thickness of the substrate, on its index of refraction and the deviation of the entrance surface from the Disk Reference Plane D on each side of the disk. The nominal position of the recording layer with respect to the Disk Reference Plane D on each side of the disk is determined by the nominal thickness of the substrate.

The deviation of any point of the recording layer from its nominal position, in a direction normal to the Disk Reference Plane D, shall not exceed 0,19 mm for rotational frequencies of the disk as specified in 9.5. The deviation shall be measured by the optical system defined in clause 9.

11.4.6 Axial acceleration

The maximum allowed axial error e_{max} (see annex V) shall not exceed 0,7 µm , measured using the Reference Servo for axial tracking of the recording layer. The rotational frequency of the disk shall be as specified in 9.5. The stationary part of the motor is assumed to be motionless (no external disturbances). The measurement shall be made using a servo with the transfer function

$$H_s(i\omega) = \frac{1}{3} \times \left(\frac{\omega_0}{i\omega} \right)^2 \times \frac{1 + \frac{3i\omega}{\omega_0}}{1 + \frac{i\omega}{3\omega_0}}$$

where

$\omega = 2\pi f$

$\omega_0 / 2\pi = 1\,550$ Hz

$i = \sqrt{-1}$

or any other servo with $|1+H|$ within 20% of $|1+Hs|$ in the bandwidth of 50 Hz to 170 kHz. Thus, the disk shall not require an acceleration of more than 22 m/s^2 at low frequencies from the servo motor of the Reference Servo.

©ISO/IEC 2002 - All rights reserved
Copyright International Organization for Standardization
Reproduced by IHS under license with ISO
No reproduction or networking permitted without license from IHS
Not for Resale

11.4.7 Radial runout

The radial runout of the tracks in the recording layer in the Information zone is measured as seen by the optical head of the Reference Drive. Thus it includes the distance between the axis of rotation of the spindle and reference axis A, the tolerances on the dimensions between axis A and the location of the track, and effects of non-uniformities in the index of refraction.

The difference between the maximum and the minimum distance of any track from the axis of rotation, measured along a fixed radial line over one physical track of the disk, shall not exceed 50 μm as measured by the optical system under conditions of a hub mounted on a perfect sized test fixture shaft, for rotational frequencies of the disk as specified in 9.5.

11.4.8 Radial acceleration

The maximum allowed radial error e_{max} (see annex V) shall not exceed 0,09 μm, measured using the Reference Servo for radial tracking of the tracks. The rotational frequency of the disk shall be as specified in 9.5. The stationary part of the motor is assumed to be motionless (no external disturbances). The measurement shall be made using a servo with the transfer function

$$H_s(i\omega) = \frac{1}{3} \times \left(\frac{\omega_0}{i\omega} \right)^2 \times \frac{1 + \frac{3i\omega}{\omega_0}}{1 + \frac{i\omega}{3\omega_0}}$$

where

$\omega = 2\pi f$

$\omega_0 / 2\pi = 2\,340$ Hz

$i = \sqrt{-1}$

or any other servo with $|1+H|$ within 20% of $|1+Hs|$ in the bandwidth of 50 Hz to 170 kHz. Thus, the disk shall not require an acceleration of more than 6,5 m/s^2 at low frequencies from the servo motor of the Reference Servo.

11.4.9 Tilt

The tilt angle, defined as the angle which the normal to the entrance surface, averaged over a circular area of 1 mm diameter, makes with the normal to the Disk Reference Plane D, shall not exceed 2.8 mrad.

11.5 Optical characteristics

11.5.1 Index of refraction

Within the Formatted Zone (see clause 17) the index of refraction of the substrate shall be within the range from 1,46 to 1,60.

11.5.2 Thickness

The thickness of the substrate from the entrance surface to the recording layer, within the Formatted Zone shall be:

$$0{,}509\,3 \times \frac{n^3}{n^2 - 1} \times \frac{n^2 + 0{,}265\,0}{n^2 + 0{,}592\,9}\ \text{mm} \pm 0{,}05\ \text{mm}$$

where n is the index of refraction.

11.5.3 Birefringence

The effect of the birefringence of the substrate is included in the measurement of the imbalance of the magneto optical signal in Channel 2 of the Reference Drive (see 26.2)

11.5.4 Vertical Birefringence

The principal vertical birefringence value shall be contained as follows:

$$0 \le \left| N_p - N_z \right| \le 500 \times 10^{-6}$$

where N_p is the index of refraction along any direction in the plane of the disk and N_z is the index of refraction normal to the plane of the disk. (See annex X).

©ISO/IEC 2002 - All rights reserved

Copyright International Organization for Standardization
Reproduced by IHS under license with ISO
No reproduction or networking permitted without license from IHS
Not for Resale

11.5.5 Reflectance

11.5.5.1 General

The reflectance R is the value of the reflectance in a Recording Track of the User Zone, measured through the substrate and does not include the reflectance of the entrance surface.

The nominal value R of the reflectance shall be specified by the manufacturer

– in byte 3 of the Control Track PEP Zone (see 17.3.2.1.4), and

– in byte 19 of the Control Track SFP Zone (see 17.4.2).

11.5.5.2 Measured value

The measured value R_m of the reflectance shall be measured under the conditions a) to f) of 9.2 and those of 20.2.2 using the split photo detector $(I_1+I_2)I_G$.

Measurements shall be made in the User Zone in any Recording Track.

11.5.5.3 Requirement

The value of R at the standard wavelength specified in 9.2 shall lie within the range 0,20 to 0,40 for Type R/W or WO disks.

At any point in the User Zone, the measured reflectance R_m shall meet the following requirement.

$$R\,(1 - 0{,}15) \leq (R_{mmax} + R_{mmin})/2 \leq R\,(1 + 0{,}15)$$

This requirement specifies the acceptable range for R_m, for all disks within the same value R. Additionally, the variation of R_m shall meet the requirement

$$(R_{mmax} - R_{mmin}) / (R_{mmax} + R_{mmin}) \leq 0{,}13$$

where

R_{mmax} is the maximum value of measured reflectance in the User Zone, and

R_{mmin} is the minimum value of measured reflectance in the User Zone.

12 Interface between cartridge and drive

12.1 Clamping method

When the cartridge is inserted into the drive, the shutter of the case is opened and the drive spindle engages the disk. The disk is held against the spindle by an axial clamping force, provided by the magnetizable material in the hub and the magnets in the spindle. The radial positioning of the disk is provided by the centering of the axis of the spindle in the centre hole of the hub. A turntable of the spindle shall support the disk in its clamping zone, determining the axial position of the disk in the case.

12.2 Clamping force

The clamping force exerted by the spindle shall be less than 14 N.

The adsorbent force measured by the test device specified in annex D shall be in the range of 8,0 N to 12,0 N.

12.3 Capture cylinder

The capture cylinder (see figure 13) is defined as the volume in which the spindle can expect the centre of the hole of the hub to be at the maximum height of the hub, just prior to capture. The size of the cylinder limits the allowable play of the disk inside its cavity in the case. This cylinder is referenced to perfectly located and perfectly sized alignment and location pins in the drive, and includes tolerances of dimensions of the case and the disk between the pins mentioned and the centre of the hub. The bottom of the cylinder is parallel to the Reference Plane P, and shall be located at a distance of

$$L_{58} = 0{,}5 \text{ mm min.}$$

above the Reference Plane P of Side B of the case when Side A of the disk is to be used. The top of the cylinder shall be located at a distance of

$$L_{59} = 4{,}3 \text{ mm max.}$$

above the same Reference Plane P, i.e. that of Side B. The diameter of the cylinder shall be

$$D_{12} = 3{,}0 \text{ mm max.}$$

©ISO/IEC 2002 - All rights reserved
Copyright International Organization for Standardization
Reproduced by IHS under license with ISO
No reproduction or networking permitted without license from IHS
Not for Resale

Its centre shall be defined by the nominal values of L_{46} and L_{51}.

12.4 Disk position in the operating condition

When the disk is in the operating condition (see figure 13) within the drive, the position of the active recording layer shall be

L_{60} = 5,35 mm ± 0,15 mm

above the Reference Plane P of that side of the case that faces the optical system. Moreover, the torque to be exerted on the disk in order to maintain a rotational frequency of 50 Hz shall not exceed 0,01 N·m, when the axis of rotation is within a circle of diameter

D_{13} = 0,2 mm max.

and a centre given by the nominal values of L_{46} and L_{51}.

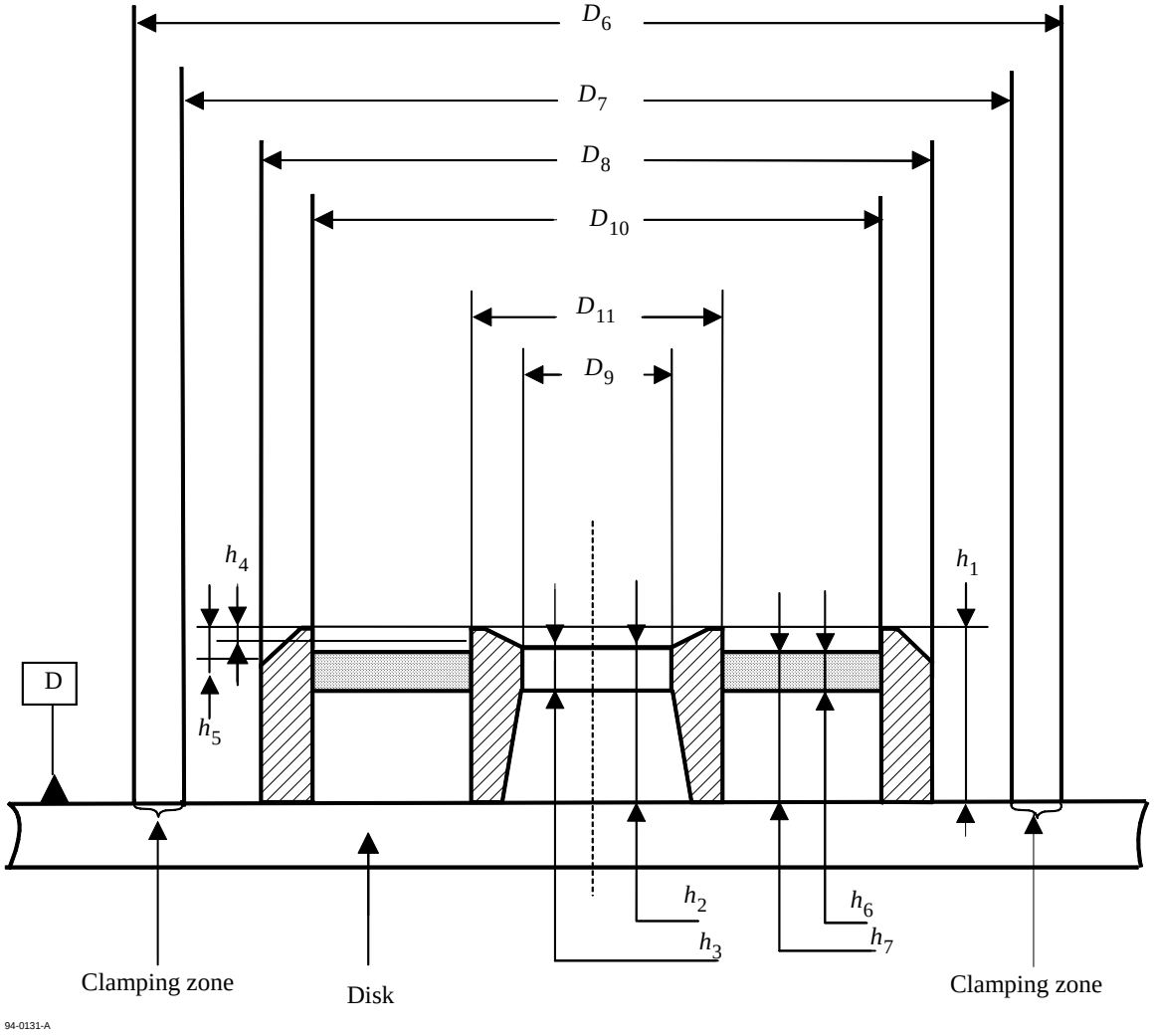

Figure 2 - Hub dimensions

©ISO/IEC 2002 - All rights reserved

Copyright International Organization for Standardization
Reproduced by IHS under license with ISO
No reproduction or networking permitted without license from IHS
Not for Resale

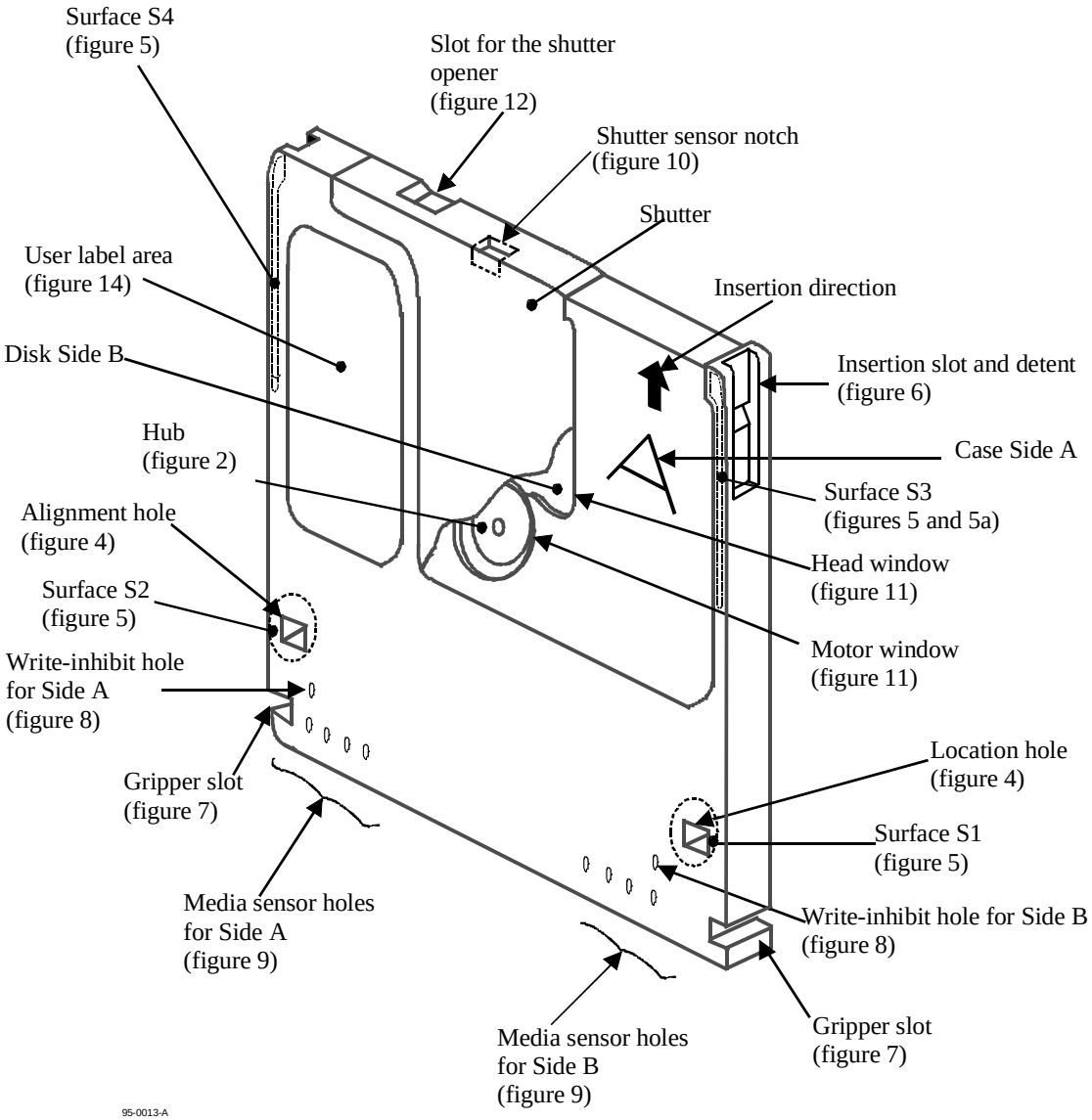

Figure 3 - Case

©ISO/IEC 2002 - All rights reserved
Copyright International Organization for Standardization
Reproduced by IHS under license with ISO
No reproduction or networking permitted without license from IHS
Not for Resale

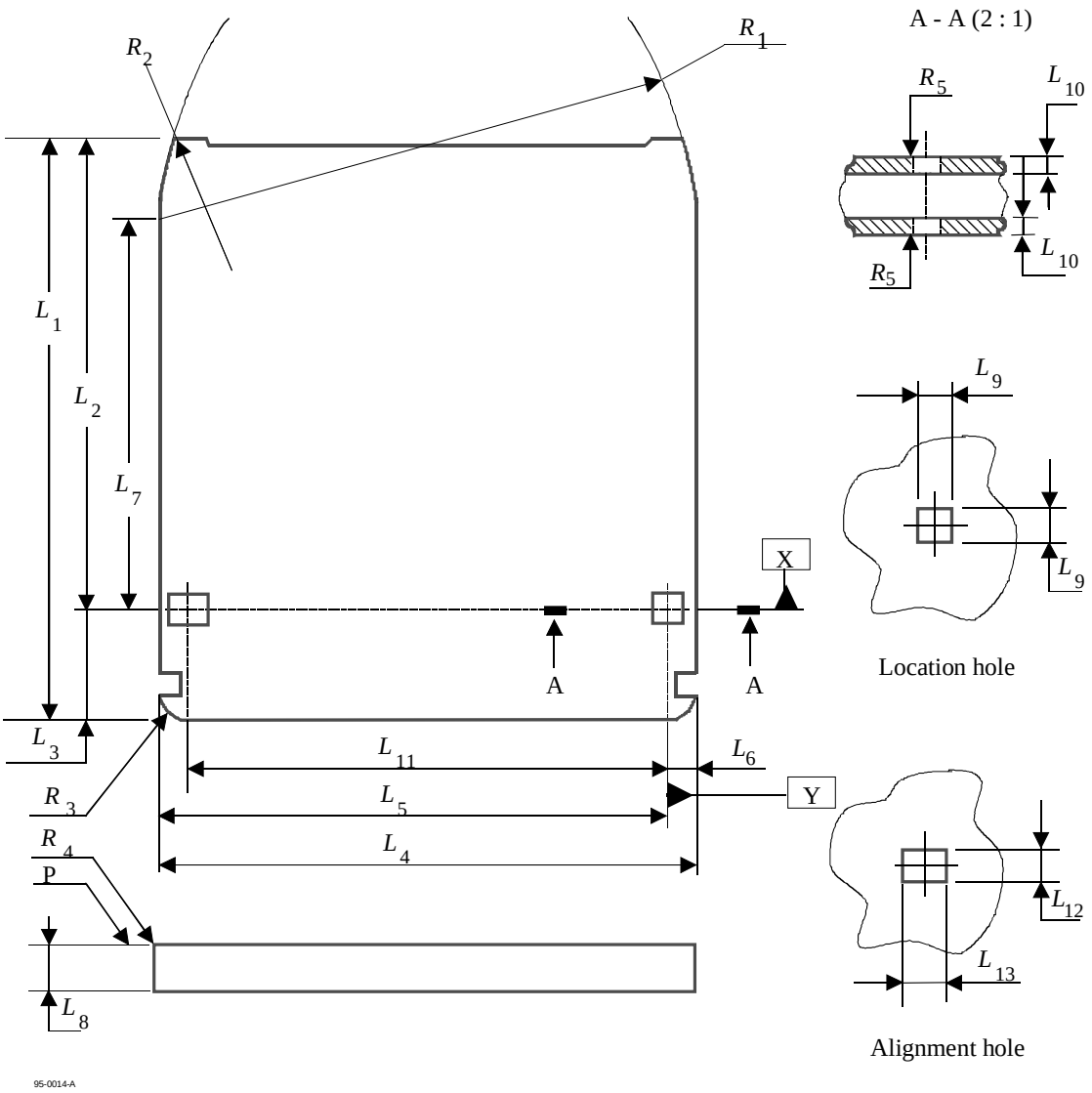

Figure 4 - Overall dimensions and reference axes

©ISO/IEC 2002 - All rights reserved

Copyright International Organization for Standardization
Reproduced by IHS under license with ISO
No reproduction or networking permitted without license from IHS
Not for Resale

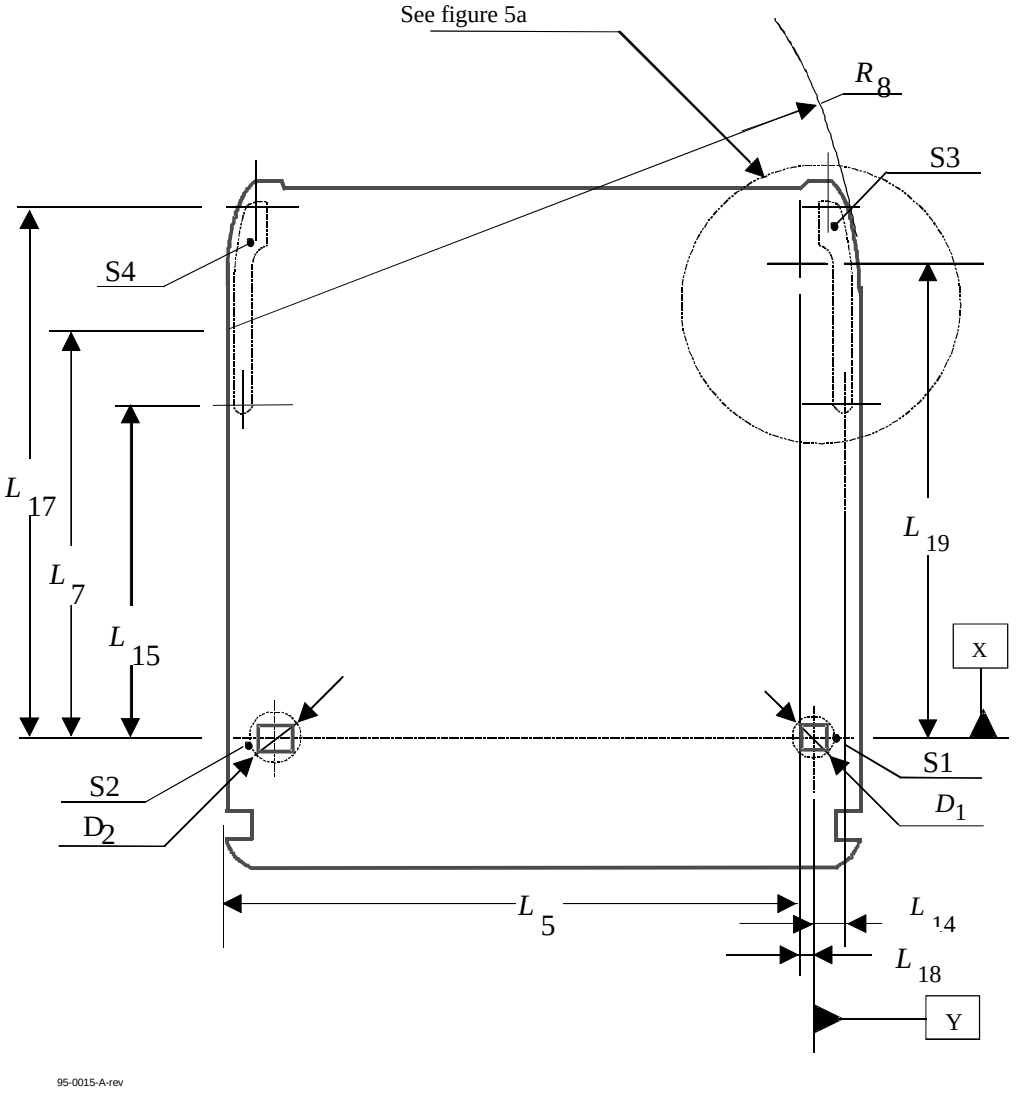

Figure 5 - Surfaces S1, S2, S3 and S4 of the reference plane P

©ISO/IEC 2002 - All rights reserved
Copyright International Organization for Standardization
Reproduced by IHS under license with ISO
No reproduction or networking permitted without license from IHS
Not for Resale

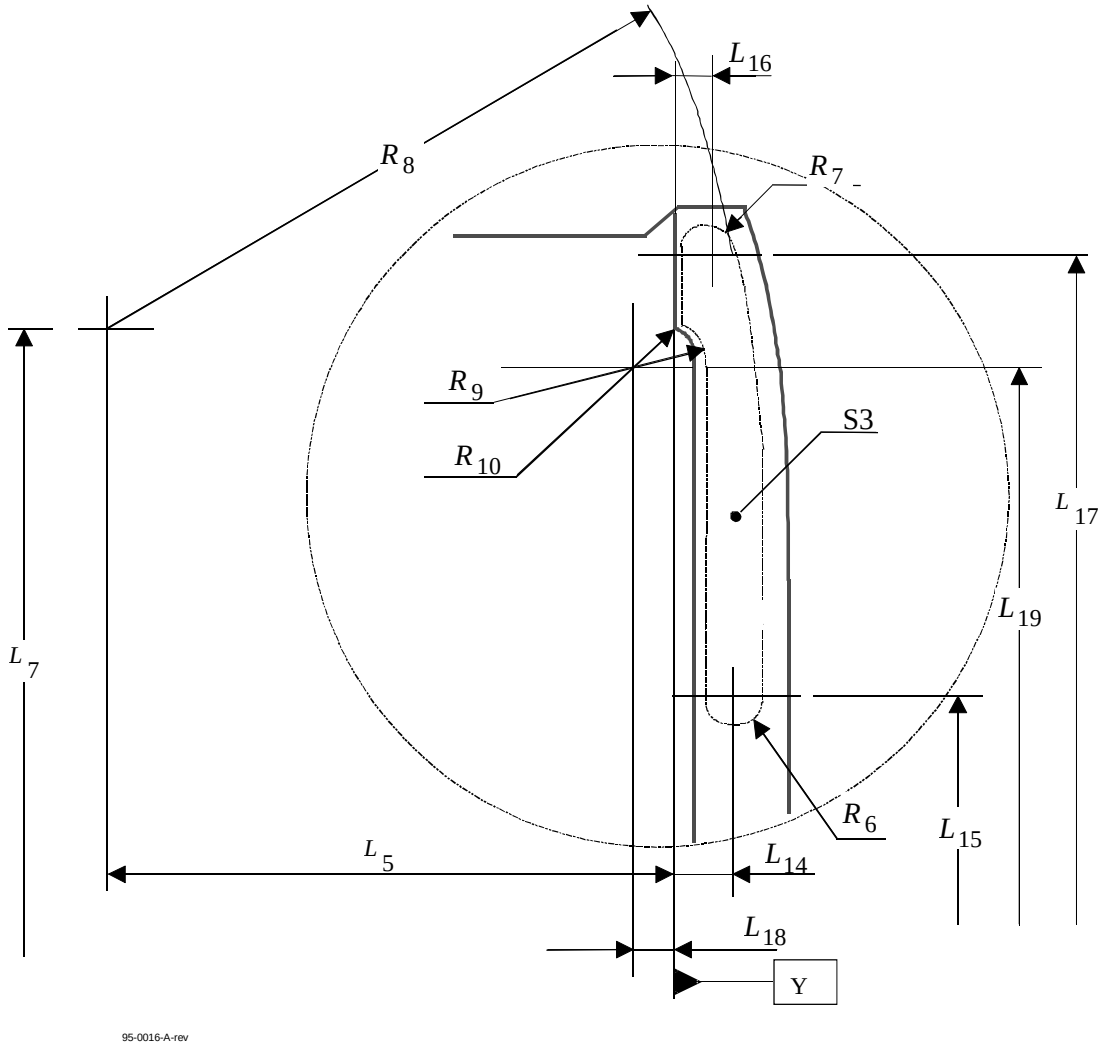

Figure 5a - Detail of surface S3

©ISO/IEC 2002 - All rights reserved

Copyright International Organization for Standardization
Reproduced by IHS under license with ISO
No reproduction or networking permitted without license from IHS
Not for Resale

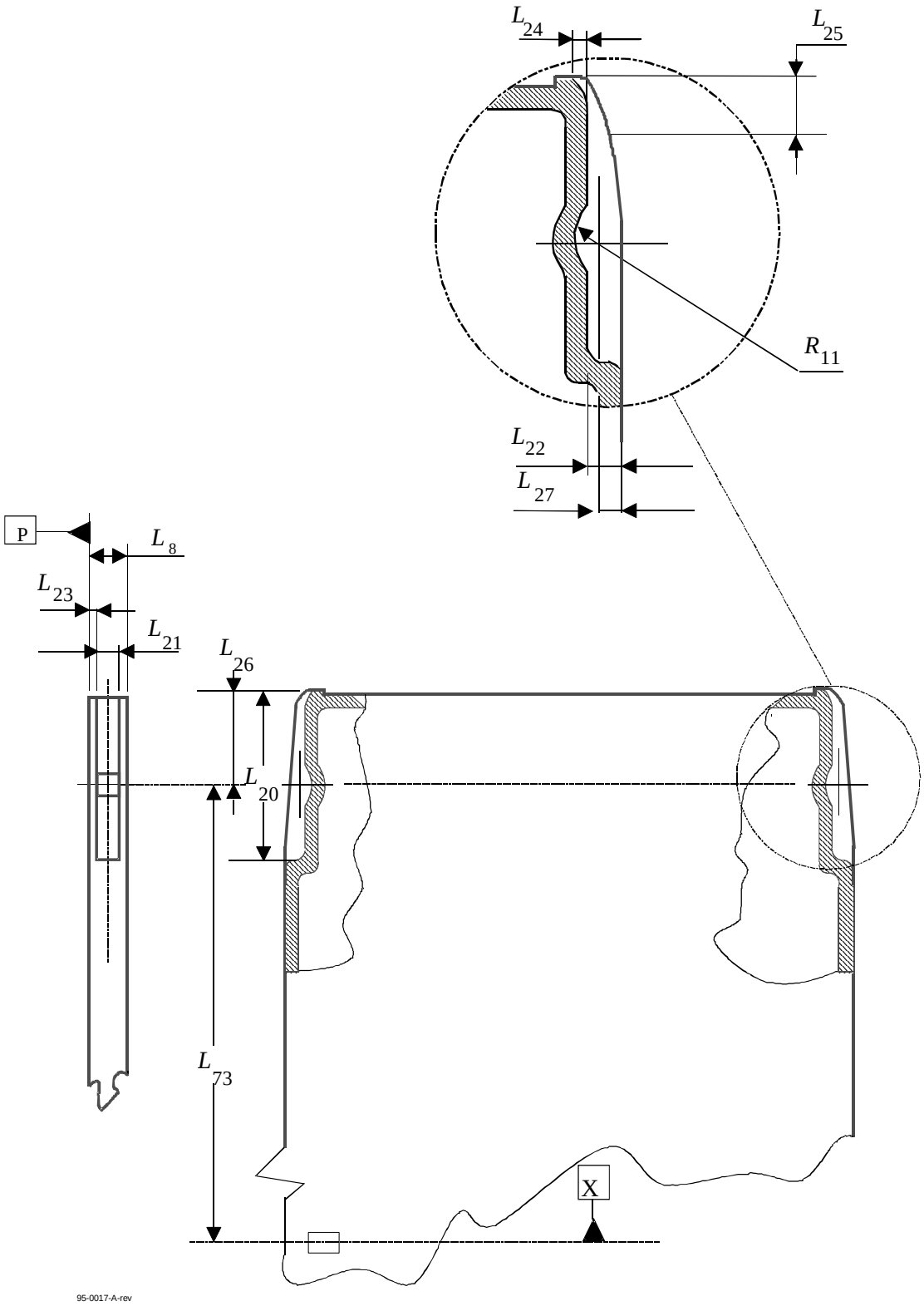

Figure 6 - Insertion slot and detent

©ISO/IEC 2002 - All rights reserved
Copyright International Organization for Standardization
Reproduced by IHS under license with ISO
No reproduction or networking permitted without license from IHS
Not for Resale

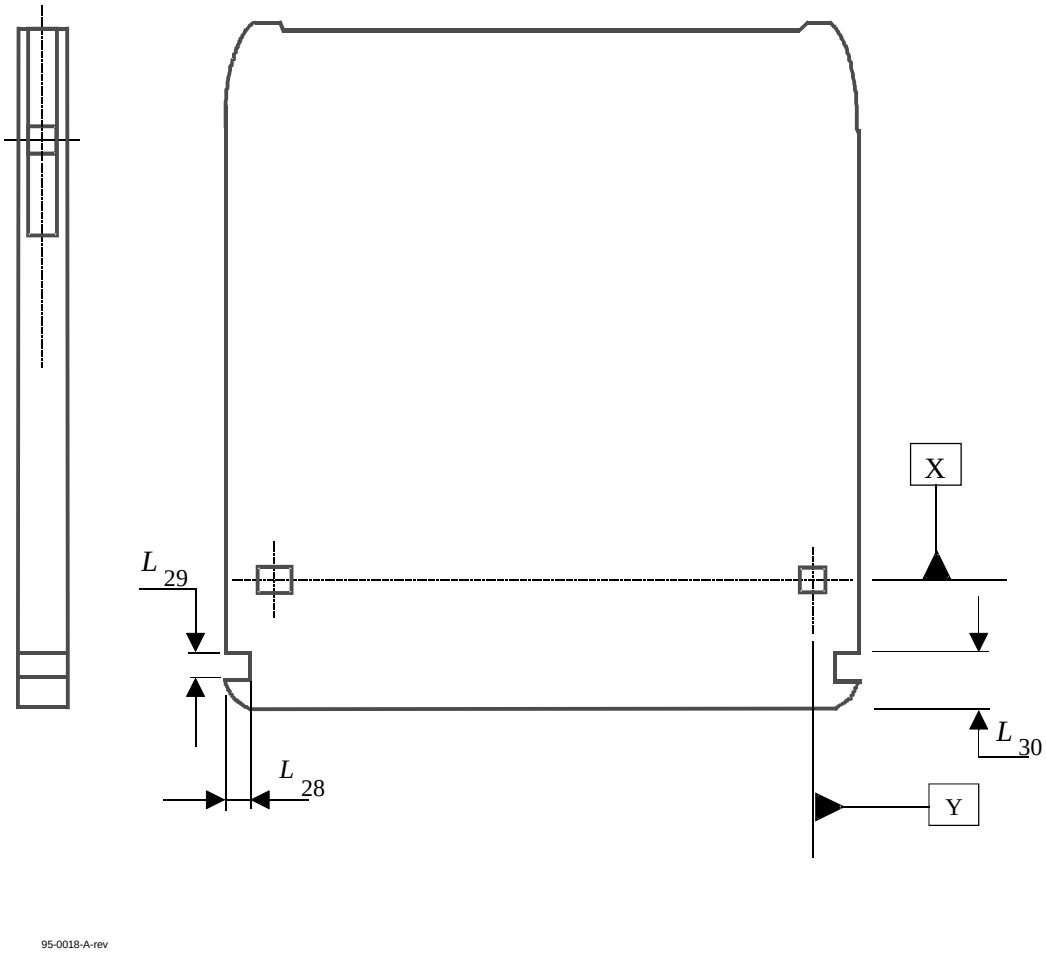

Figure 7 - Gripper slots

©ISO/IEC 2002 - All rights reserved

Copyright International Organization for Standardization
Reproduced by IHS under license with ISO
No reproduction or networking permitted without license from IHS
Not for Resale

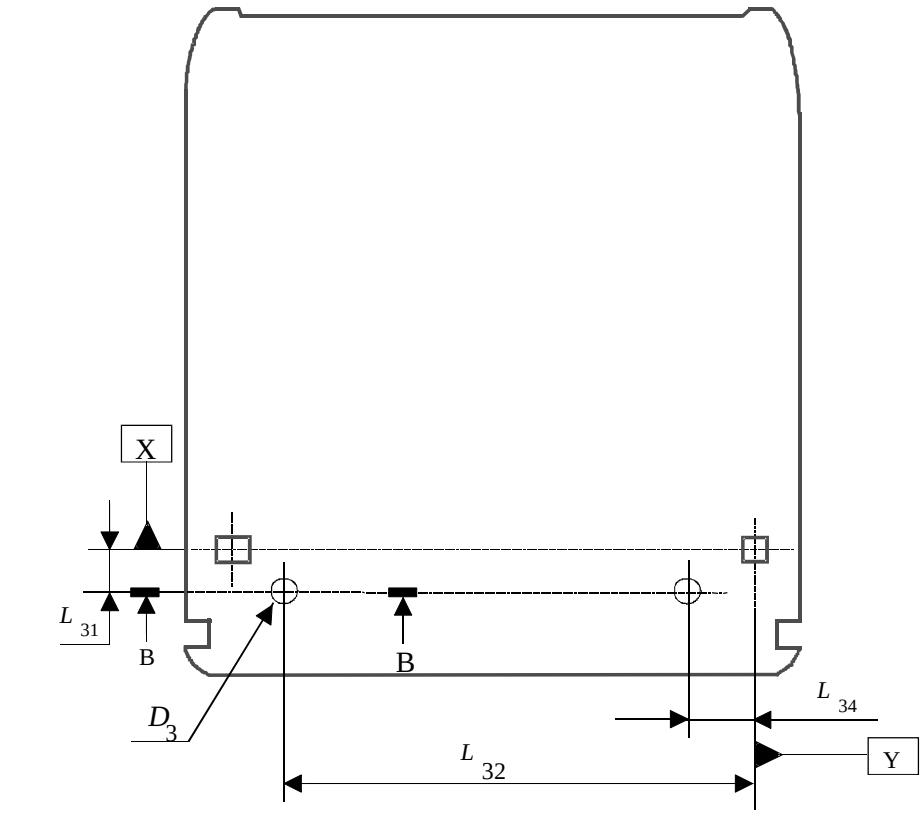

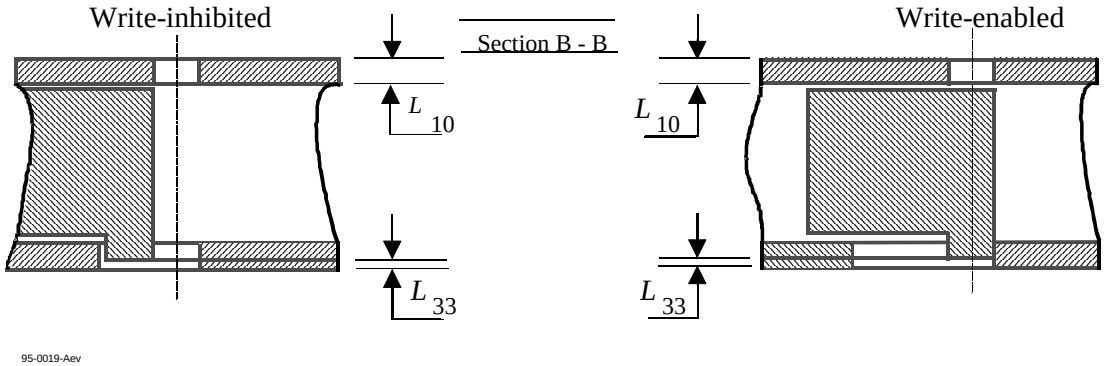

Figure 8 - Write-Inhibit holes

©ISO/IEC 2002 - All rights reserved
Copyright International Organization for Standardization
Reproduced by IHS under license with ISO
No reproduction or networking permitted without license from IHS
Not for Resale

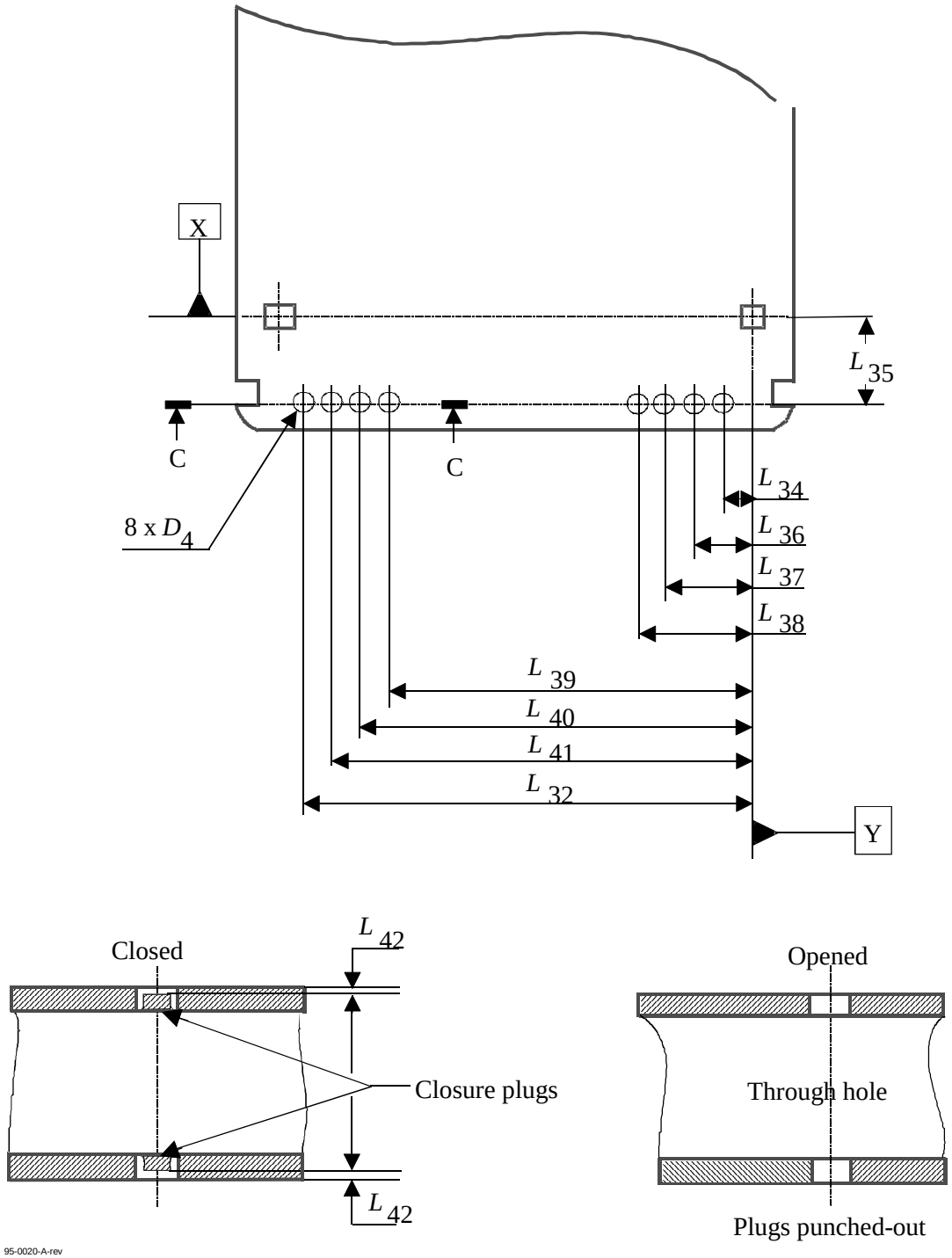

Figure 9 - Media ID sensor holes

©ISO/IEC 2002 - All rights reserved

Copyright International Organization for Standardization
Reproduced by IHS under license with ISO
No reproduction or networking permitted without license from IHS
Not for Resale

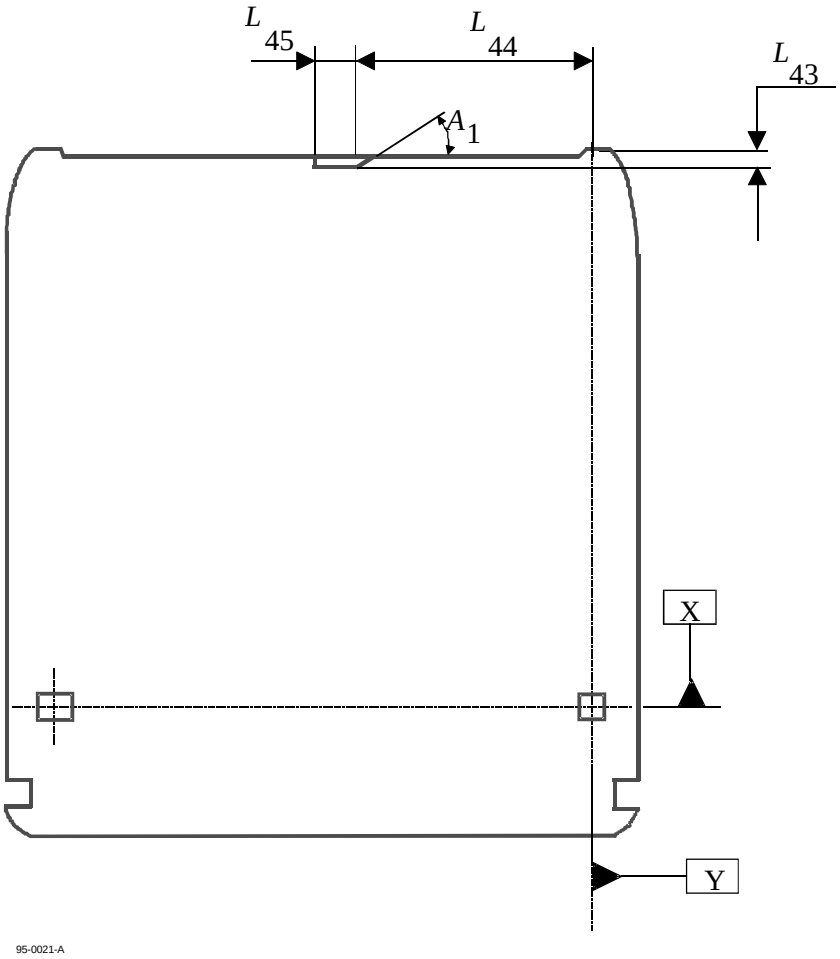

Figure 10 - Shutter sensor notch viewed from Side A

©ISO/IEC 2002 - All rights reserved
Copyright International Organization for Standardization
Reproduced by IHS under license with ISO
No reproduction or networking permitted without license from IHS
Not for Resale

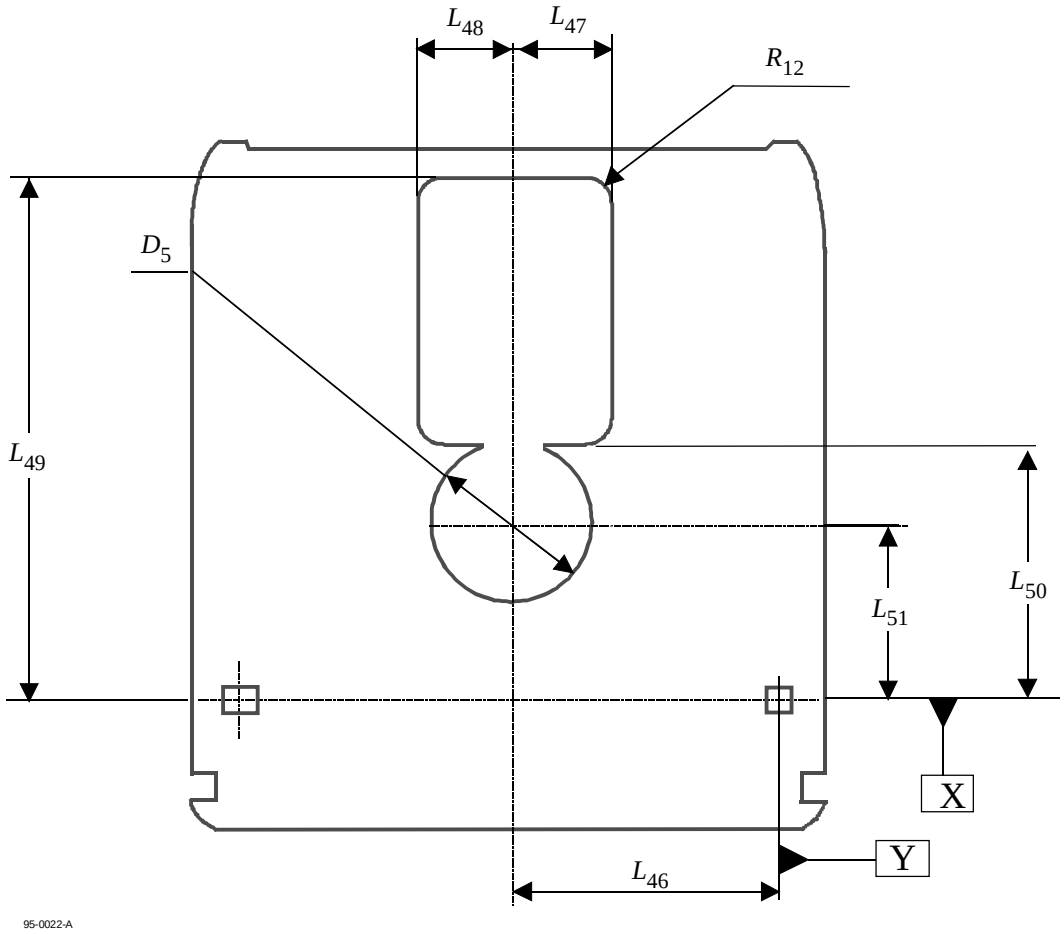

Figure 11 - Head and motor window

©ISO/IEC 2002 - All rights reserved

Copyright International Organization for Standardization
Reproduced by IHS under license with ISO
No reproduction or networking permitted without license from IHS
Not for Resale

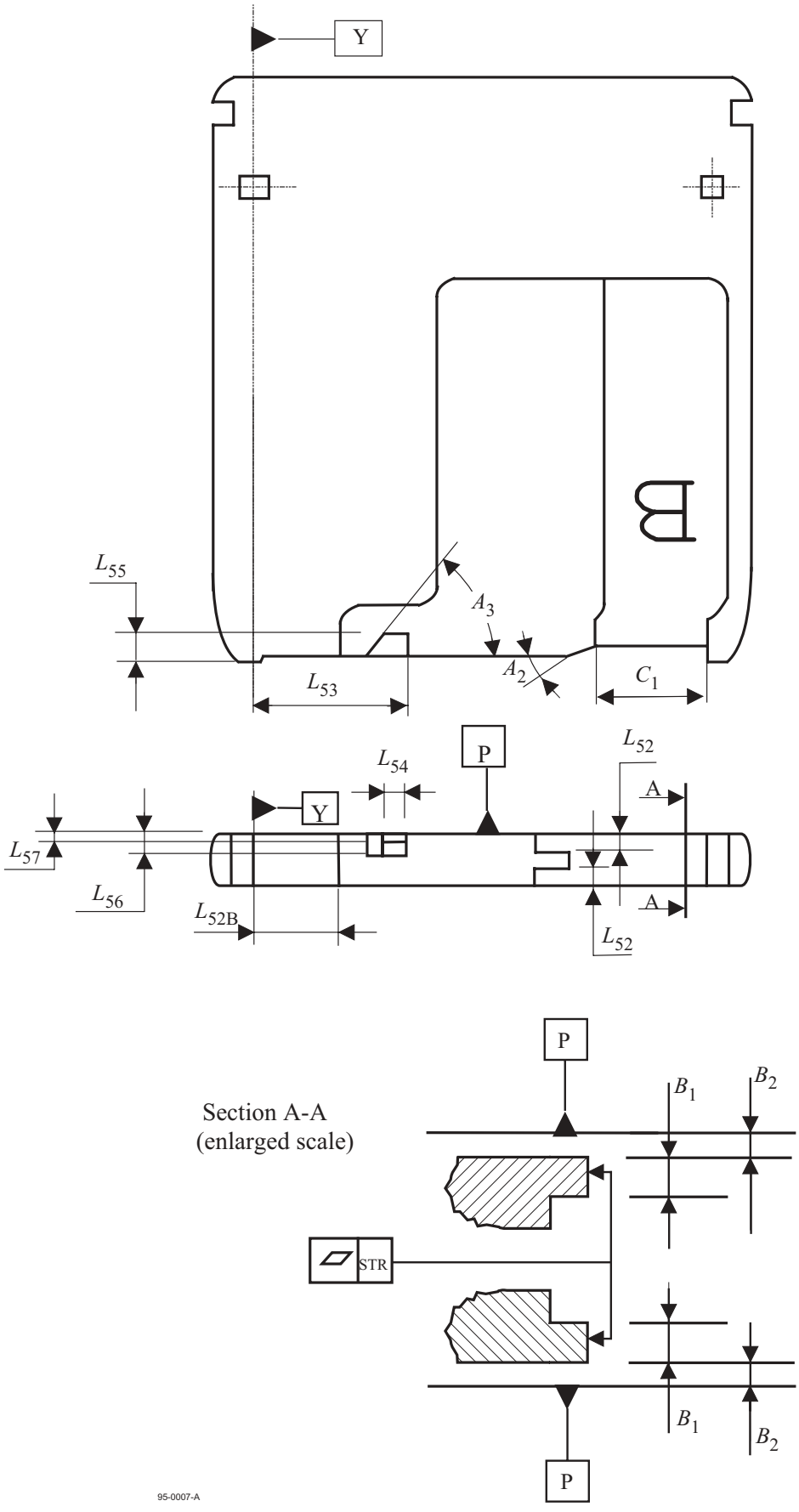

Figure 12 - Shutter opening features

©ISO/IEC 2002 - All rights reserved
Copyright International Organization for Standardization
Reproduced by IHS under license with ISO
No reproduction or networking permitted without license from IHS
Not for Resale

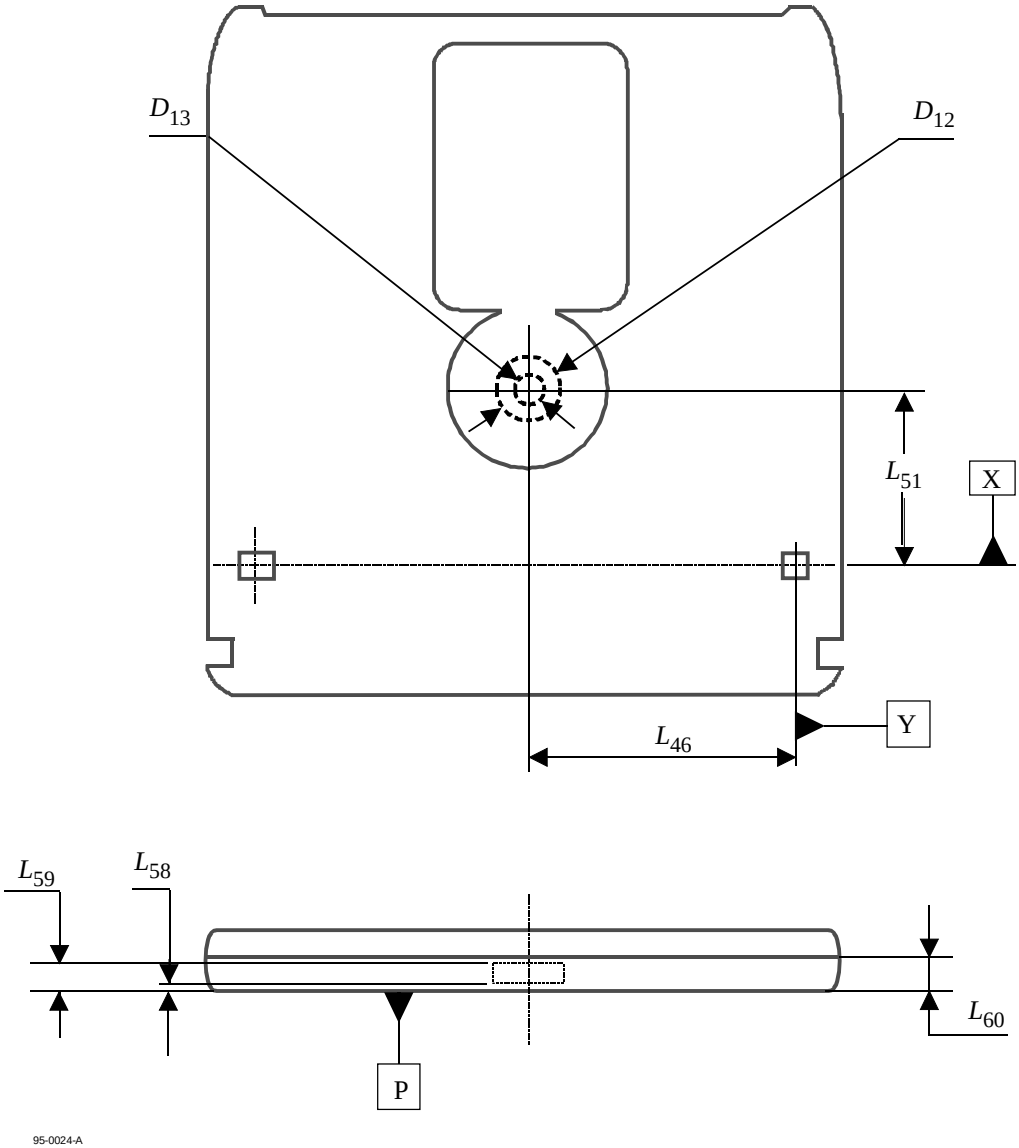

Figure 13 - Capture cylinder

©ISO/IEC 2002 - All rights reserved

Copyright International Organization for Standardization
Reproduced by IHS under license with ISO
No reproduction or networking permitted without license from IHS
Not for Resale

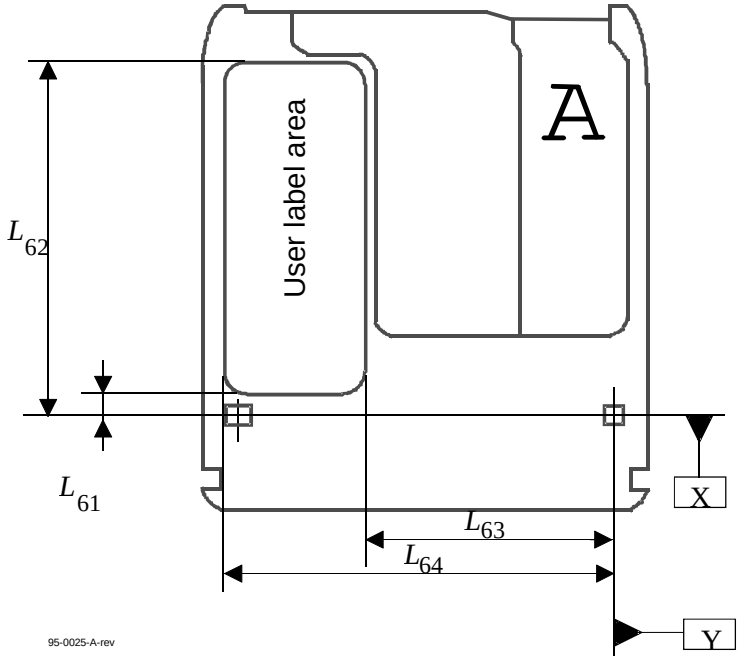

Figure 14a - User label area on Side A

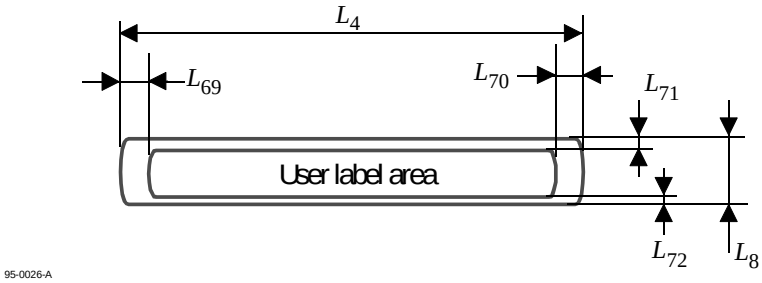

Figure 14b - User label area on bottom surface

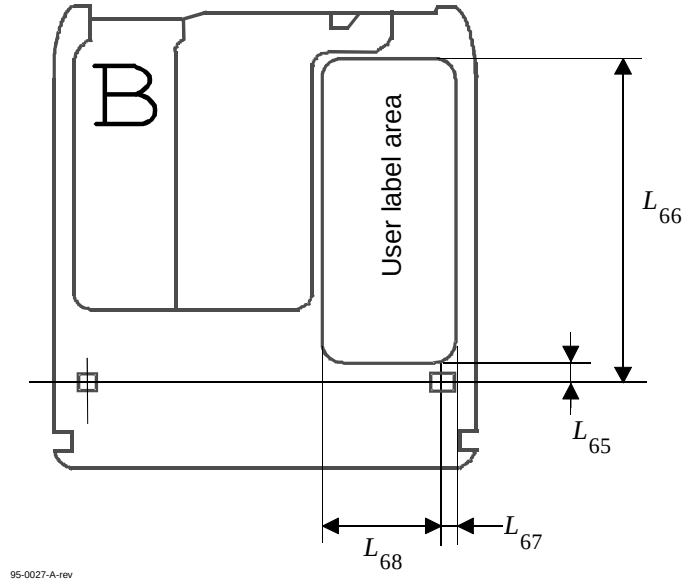

Figure 14c - User label area on Side B

©ISO/IEC 2002 - All rights reserved
Copyright International Organization for Standardization
Reproduced by IHS under license with ISO
No reproduction or networking permitted without license from IHS
Not for Resale

Section 3 - Format of information

13 Track and Header geometry

13.1 Track and Header shape

The Formatted Zone shall contain tracks intended for the continuous servo tracking method. (See table 4).

This International Standard distinguishes between physical and logical tracks. A logical track is a part of a physical track containing a defined number of consecutive sectors (see 14.2).

Physical Tracks consist of adjacent land-groove pairs. Both lands and grooves form continuous 360° spirals except for preformatted Header areas, where pre-recorded marks are formed in non-grooved areas. A groove is a trench-like feature, the bottom of which is located nearer to the entrance surface than the land. Within each land-groove pair, there are two Recording Tracks, one is located on the centreline of the land (Land Track), the other is located on the centerline of the groove (Groove Track). The Sector Mark portions of the preformatted Headers (see 15.2) are aligned with the centrelines of both land and groove Recording Tracks. The Headers 1 and 2 (VFO, AM, ID, and PA) are located on the lines defined by the interfaces between the land and groove pairs. The shape of the land and groove are determined by the requirements in clause 21.

Pre-Formatted Headers

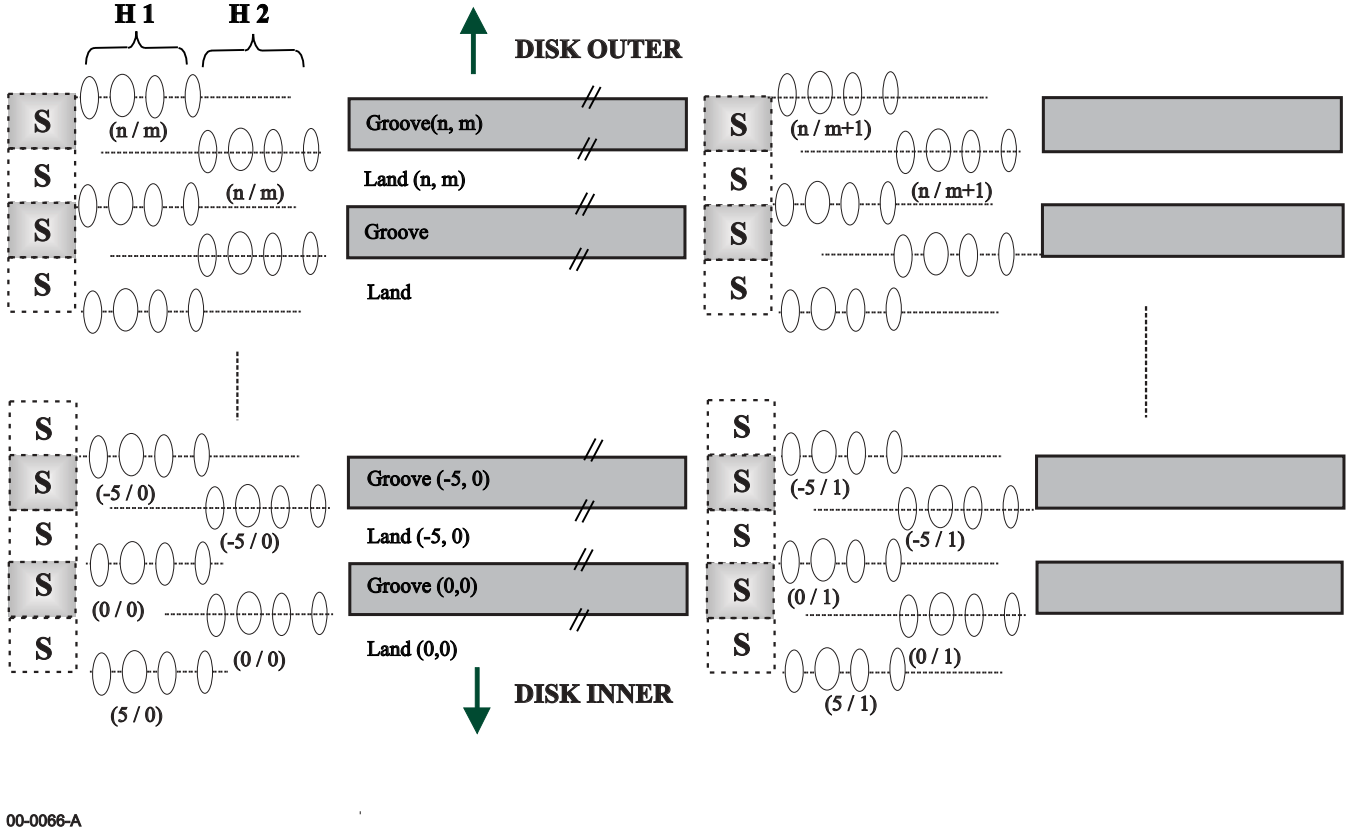

00-0066-A

(n/m) :: ID track number n/sector number m
S :: Sector Mark
H1/H2 :: Header 1/Header 2
if on groove => ID_1 data = ID_2 data, if on land => ID_1 data ≠ ID_2 data

Figure 15a - Track and Header Geometry

©ISO/IEC 2002 - All rights reserved

Copyright International Organization for Standardization
Reproduced by IHS under license with ISO
No reproduction or networking permitted without license from IHS
Not for Resale

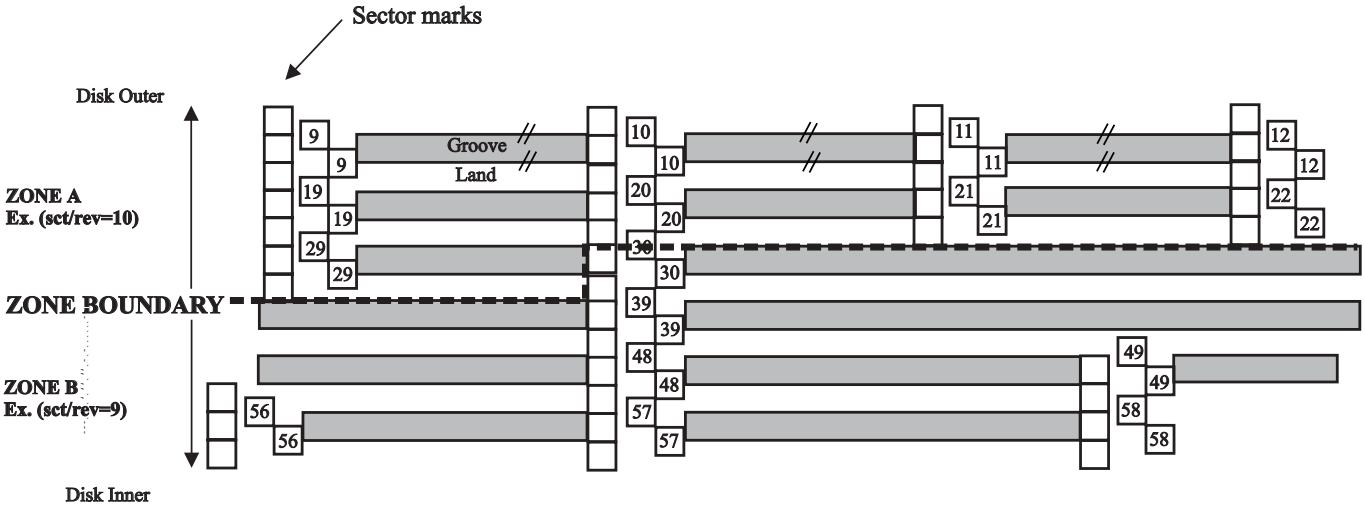

00-0067-A

- There are two lead-in Embossed Tracks in every zone in the user area which contain pre-formatted headers only once per revolution at the zone boundary.
- Sector numbers shown are for illustrative purposes only.

Figure 15b - Track Details at Zone Boundary

Figure 15 - Land and Groove Recording Track Geometry

13.2 Direction of track spiral

The track shall spiral inward from the outer diameter to the inner diameter.

13.3 Track pitch

The track pitch is the distance between adjacent Groove Track centrelines and Land Track centerlines, measured in a radial direction. It shall be 0,652 µm ± 0,03 µm except in the Control Track PEP Zone. The width of a group of bands corresponding to 49 728/49 520 physical tracks shall be 32,4/32,3 mm ± 0,10 mm.

13.4 Logical track number

Each logical track shall be identified by a logical track number (see 15.5). Unless otherwise stated all track numbers refer to logical tracks only.

Track 0 shall be located at radius 62,10 mm ± 0,10 mm.

The logical track numbers of logical tracks located at radii smaller than that of track 0 shall be increased by 1 for each track.

The logical track numbers of logical tracks located at radii larger than that of track 0 shall be negative, and decrease by 1 for each track. Their value is given in TWO's complement, thus track -1 is indicated by (3FFFF).

ID_1 and ID_2 in the Pre-formatted Headers (see 15.5) identify the logical tracks and sectors. The relationship of ID_1, ID_2, logical track, and logical sectors are defined by the tables 7 and 8.

14 Track format

14.1 Physical track layout

All sectors on a disk shall be the same size.

For disks with 4 096-byte sectors, on each physical track there shall be 15 to 30 sectors. Each sector shall comprise 5 048 bytes. The embossed header data is recorded at half the density of MO data. A byte is represented on the disk by 12 Channel bits. Hence, the length of one Channel bit is determined by the requirement that there are (15 to 30) x 5 124 x 12 = 922 320 to 1 844 640 Channel bits on a physical track. The sectors shall be equally spaced over a physical track in such a way that the distance between the first Channel bit of a sector and the first Channel bit of the next sector shall be 60 576 Channel bits ± 5

©ISO/IEC 2002 - All rights reserved
Copyright International Organization for Standardization
Reproduced by IHS under license with ISO
No reproduction or networking permitted without license from IHS
Not for Resale

Channel bits. At the rotational frequency of 50 Hz, the period T_m of the TA, ALPC, Gap, and MO recording field Channel bits equals

$T_m = 10^9 / \{50 \times (922\,320 \text{ to } 1\,844\,640)\}$ ns = 21,68 ns to 10,84 ns

The period T_h of a Channel bit in Preformatted headers equals $T_h = T_m / 2$ = 43,37 ns to 21,68 ns

For disks with 2 048-byte sectors, on each physical track there shall be 28 to 57 sectors. Each sector shall comprise 2 652 bytes. The embossed header data is recorded at half the density of MO data. A byte is represented on the disk by 12 Channel bits. Hence, the length of one Channel bit is determined by the requirement that there are (28 to 57) x 2 728 x 12 = 916 608 to 1 865 952 Channel bits on a physical track. The sectors shall be equally spaced over a physical track in such a way that the distance between the first Channel bit of a sector and the first Channel bit of the next sector shall be 31 824 Channel bits ± 5 Channel bits. At the rotational frequency of 50 Hz, the period T_m of the TA, ALPC, Gap, and MO recording field Channel bit equals

$T_m = 10^9 / \{50 \times (916\,608 \text{ to } 1\,865\,952)\}$ ns = 21,82 ns to 10,72 ns

The period T_h of a Channel bit in Preformatted headers equals $T_h = T_m / 2$ = 43,64 ns to 21,44 ns

Table 2 – Nominal Clock Frequencies and Periods of 4 096-byte sector media at rotational frequency of 50 Hz

Format			**Preformated Header**		**TA, ALPC, Gap, Recording field**	
Zone or Band			**Clock Frequency MHz**	**Period T_h ns**	**Clock Frequency MHz**	**Period T_m ns**
Lead-in Zone			46,12	21,68	92,23	10,84
SFP Zone			46,12	21,68	92,23	10,84
Manufacturer Zone			46,12	21,68	92,23	10,84
	Band	0	46,12	21,68	92,23	10,84
	Band	1	44,58	22,43	89,16	11,22
	Band	2	43,04	23,23	86,08	11,62
	Band	3	41,50	24,09	83,01	12,05
	Band	4	39,97	25,02	79,93	12,51
	Band	5	38,43	26,02	76,86	13,01
	Band	6	36,89	27,11	73,79	13,55
User Zone	Band	7	35,36	28,28	70,71	14,14
	Band	8	33,82	29,57	67,64	14,78
	Band	9	32,28	30,98	64,56	15,49
	Band	10	30,74	32,53	61,49	16,26
	Band	11	29,21	34,24	58,41	17,12
	Band	12	27,67	36,14	55,34	18,07
	Band	13	26,13	38,27	52,26	19,13
	Band	14	24,60	40,66	49,19	20,33
	Band	15	23,06	43,37	46,12	21,68
Manufacturer Zone			23,06	43,37	46,12	21,68
SFP Zone			23,06	43,37	46,12	21,68
Transition Zone			23,06	43,37	46,12	21,68

©ISO/IEC 2002 - All rights reserved

Copyright International Organization for Standardization
Reproduced by IHS under license with ISO
No reproduction or networking permitted without license from IHS
Not for Resale

Table 3 – Nominal Clock Frequencies and Periods of 2 048-byte sector media at rotational frequency of 50 Hz

Format			Preformated Header		TAs,Alpc,Gap,Recording field	
Zone or Band			Clock Frequency MHz	Period T_h ns	Clock Frequency MHz	Period T_m ns
Lead-in Zone			46,65	21,44	93,30	10,72
SFP Zone			46,65	21,44	93,30	10,72
Manufacturer Zone			46,65	21,44	93,30	10,72
	Band	0	46,65	21,44	93,30	10,72
	Band	1	45,83	21,82	91,66	10,91
	Band	2	45,01	22,22	90,02	11,11
	Band	3	44,19	22,63	88,39	11,31
	Band	4	43,38	23,05	86,75	11,53
	Band	5	42,56	23,50	85,11	11,75
	Band	6	41,74	23,96	83,48	11,98
	Band	7	40,92	24,44	81,84	12,22
	Band	8	40,10	24,94	80,20	12,47
	Band	9	39,28	25,46	78,57	12,73
	Band	10	38,46	26,00	76,93	13,00
	Band	11	37,65	26,56	75,29	13,28
	Band	12	36,83	27,15	73,66	13,58
	Band	13	36,01	27,77	72,02	13,89
User Zone	Band	14	35,19	28,42	70,38	14,21
	Band	15	34,37	29,09	68,75	14,55
	Band	16	33,55	29,80	67,11	14,90
	Band	17	32,74	30,55	65,47	15,27
	Band	18	31,92	31,33	63,84	15,67
	Band	19	31,10	32,16	62,20	16,08
	Band	20	30,28	33,02	60,56	16,51
	Band	21	29,46	33,94	58,92	16,97
	Band	22	28,64	34,91	57,29	17,46
	Band	23	27,83	35,94	55,65	17,97
	Band	24	27,01	37,03	54,01	18,51
	Band	25	26,19	38,18	52,38	19,09
	Band	26	25,37	39,42	50,74	19,71
	Band	27	24,55	40,73	49,10	20,36
	Band	28	23,73	42,13	47,47	21,07
	Band	29	22,92	43,64	45,83	21,82
Manufacturer Zone			22,92	43,64	45,83	21,82
SFP Zone			22,92	43,64	45,83	21,82
Transition Zone			22,92	43,64	45,83	21,82

©ISO/IEC 2002 - All rights reserved
Copyright International Organization for Standardization
Reproduced by IHS under license with ISO
No reproduction or networking permitted without license from IHS
Not for Resale

14.2 Logical track layout

On each logical track there shall be 6/7 sectors.

14.3 Radial alignment

The Headers of the sectors in each band shall be radially aligned in such a way that the distance between the first Channel bit of sectors in adjacent physical tracks shall be less than 5 Channel bits.

The Headers of the first sector in all bands shall be radially aligned in such a way that the distance between the first Channel bit of the first sectors of each band shall be less than 120 Channel bits.

14.4 Sector number

The sectors of a logical track shall be numbered consecutively from 0 to 5/6.

15 Sector format

15.1 Sector layout

Sectors shall have one of the two physical layouts shown in figures 16 and 17 depending on the number of user bytes in the Data field. ODCs that are designated as 512 byte and 1 024 byte sector media shall use the 4 096 byte sector physical layout. The number of user bytes per sector is specified by byte 1 of each of the Control Track Zones. The pre-formatted header area of 76 bytes, Transition Area (TA1) area of 1 byte, ALPC and Gap area of 17 bytes, VFO3 of 27 bytes, and Sync pattern of 4 bytes are the same for both sector formats.

On the disk 8-bit bytes shall be represented by 12 Channel bits (see clause 16).

In figures 16 and 17 the numbers below the fields indicate the number of bytes in each field.

SM	VFO_1	AM	ID_1	PA_1	VFO_2	AM	ID_2	PA_2
8	26	1	5	2	26	1	5	2

Header 1 **Header 2**

Pre-formatted Headers

Gap	ALPC
11	6

ALPC and Gap

Pre-formatted Header	TA_1	ALPC, Gap	VFO_3	Sync	Data field	PA_2	Buffer	TA_2
76	1	17	27	4	4 878 User Data, SWF, CRC, Resync	2	42	1

Figure 16 - Sector format for 4 096 user bytes

©ISO/IEC 2002 - All rights reserved

Copyright International Organization for Standardization
Reproduced by IHS under license with ISO
No reproduction or networking permitted without license from IHS
Not for Resale

SM
8

VFO_1	AM	ID_1	PA_1
26	1	5	2

VFO_2	AM	ID_2	PA_2
26	1	5	2

Header 1 **Header 2**

Pre-formatted Headers

Gap	ALPC
11	6

ALPC and Gap

Pre-formatted Header	TA_1	ALPC, Gap	VFO_3	Sync	Data field	PA_2	Buffer	TA_2
76	1	17	27	4	2 498 (User Data, SWF, CRC, Resync)	2	26	1

Figure 17 - Sector format for 2 048 user bytes

15.2 Sector Mark

The Sector Mark shall consist of an embossed pattern that does not occur in RLL (1,7) code (see 16) and is intended to enable the drive to identify the start of the sector without recourse to a phase-locked loop.

The Sector Mark shall have a length of 96 Channel bits and shall consist of pre-recorded, continuous, long marks of different Channel bit lengths followed by a lead-in to the VFO_1 field. This pattern does not exist in data.

There are two kinds of Sector Marks to identify even-numbered bands and odd-numbered bands. The Sector Mark pattern shall be as shown in figure 18, where T corresponds to the time length of one Channel bit. The signal obtained from a mark is less than a signal obtained from space. The lead-in shall have the Channel bit pattern 000101 for odd-numbered bands and 000001 for even-numbered bands.

The Sector Mark pattern used for the Inner Manufacturer Zone, the Inner Control Track SFP, the Transition Zone, and the Inner Guard Band shall be the same pattern as that used in band 15/29. The Sector Mark pattern used for the Lead-in Zone, the Outer Control Track SFP, the Outer Manufacturer Zone, and the Outer Guard Band shall be the same pattern as that used in band 0.

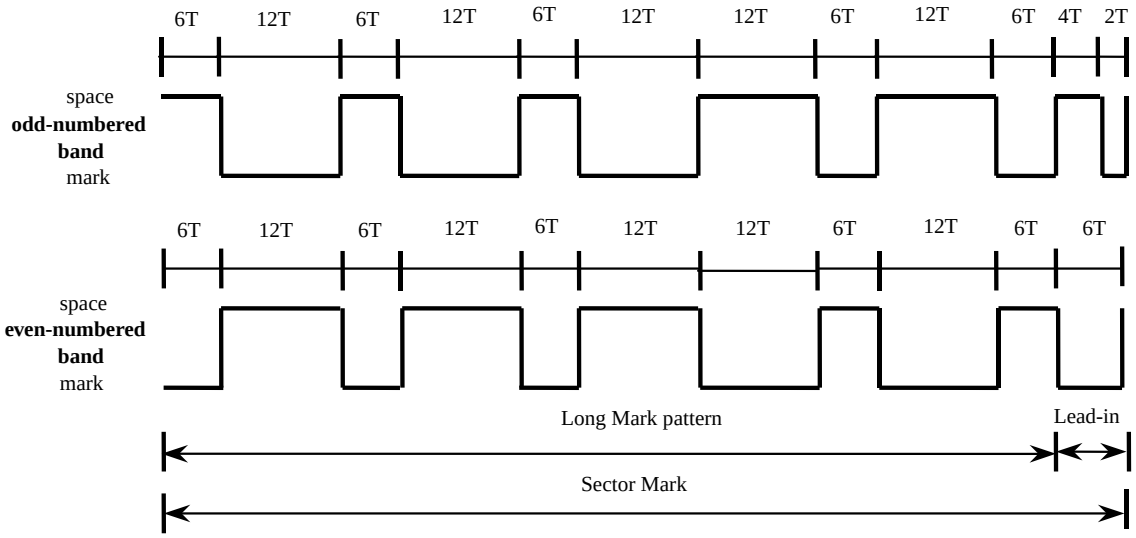

Figure 18 - Sector Mark pattern

©ISO/IEC 2002 - All rights reserved
Copyright International Organization for Standardization
Reproduced by IHS under license with ISO
No reproduction or networking permitted without license from IHS
Not for Resale

15.3 VFO fields

There shall be three fields designated VFO_1, VFO_2 and VFO_3 (figure 19) to synchronize the VFO.

The first two fields, VFO_1 and VFO_2, shall be embossed. The third field, VFO_3, shall be written by the drive when data is written to the sector.

The continuous Channel bit pattern for VFO fields shall be:

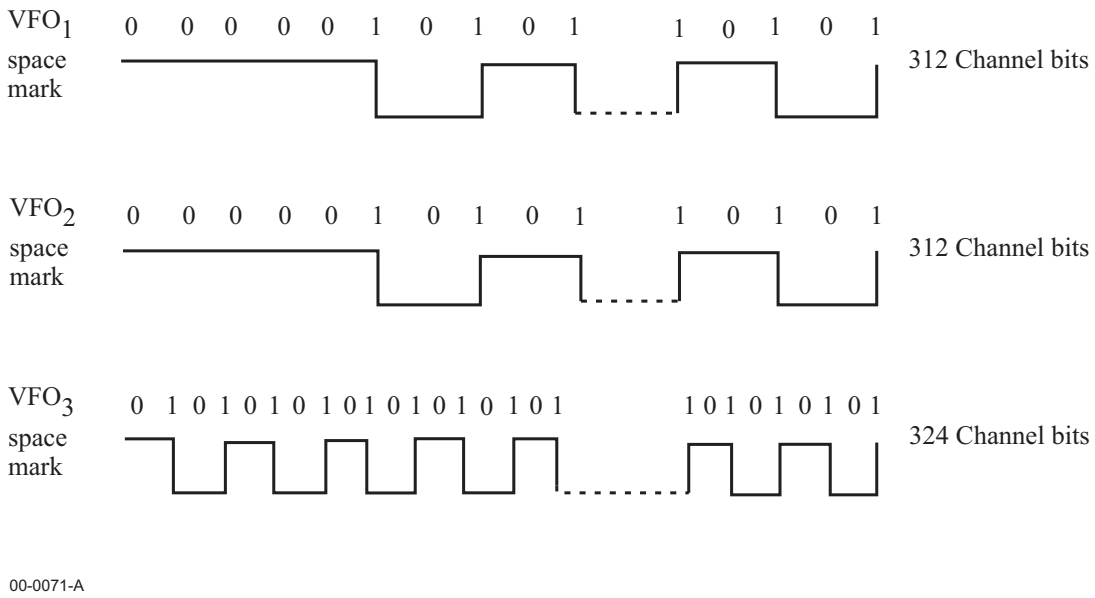

Figure 19 - VFO Field Patterns

The start of the VFO_3 field shall be not more than 6 Channel bits from the ideal position given in this International Standard. This tolerance allows for timing inaccuracies of the optical drive controller and shall be compensated for by the ALPC preceding the VFO_3 field and by the Buffer field at the end of the sector.

15.4 Address Mark (AM)

The Address Mark shall consist of an embossed pattern that does not occur in RLL (1,7) code and which is a run-length violation for this code. The field is intended to give the drive byte synchronization for the following ID field. It shall have a length of 12 Channel bits with the following pattern:

0000 0000 10x0

where the value x shall be determined as follows:

if the first data bits of the following ID field are set to ZERO ZERO, x shall be set to ONE

if the first data bits of the following ID field are not set to ZERO ZERO, x shall be set to ZERO.

Since the last bit of the preceding VFO field is set to ONE, and a bit set to ONE appears in the AM after 8 other Channel bits, this 10-bit sequence constitutes the detection pattern.

15.5 ID fields

The data contained in the two ID fields is used to identify the address of the sector that follows, i.e. ID track number and sector number of the sector, and CRC bytes. ID_1 and ID_2 data shall be either the same (Groove Track Recording) or different (Land Track Recording).

Each field shall consist of five bytes with the following embossed contents:

1st byte

This byte shall specify the second least significant byte of the ID track number.

©ISO/IEC 2002 - All rights reserved

Copyright International Organization for Standardization
Reproduced by IHS under license with ISO
No reproduction or networking permitted without license from IHS
Not for Resale

2nd byte

This byte shall specify the least significant byte of the ID track number.

3rd byte

bit 7	shall specify the ID number. when set to ZERO shall mean the ID_1 field, when set to ONE shall mean the ID_2 field,
bits 6 to 5	shall specify the two most significant bits of the ID track number
bits 4 to 0	shall specify the sector number in binary notation .

4th and 5th bytes

These two bytes shall specify a 16-bit CRC computed over the first three bytes of this field (see annex E).

The first two data bits of the ID field shall be encoded using table 2. When doing this, the last Channel bit from the AM shall be used as input to the encoder.

The first three Channel bits of the ID field shall be decoded using table 3. When doing this, the last two Channel bits from the AM shall be used as input to the decoder.

15.6 Postamble (PA_1)

This field shall be equal in length to 24 Channel bits following the ID_2 field and shall be set as shown in figure 20.

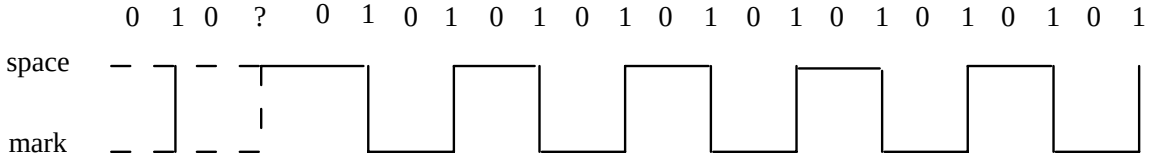

Figure 20 - Postamble pattern

The starting bits of the PA shall be ZERO ONE ZERO and considered as encoded from input bits ONE ZERO.

The value of the 4th bit (identified by ?) shall be such as to end this field in the trailing edge of an embossed mark such that the following gap field is always recorded as a space. Due to the use of the RLL (1,7) encoding scheme (see 16), the framing of the last byte of the CRC in the ID_2 field is uncertain within a few bit times. The Postamble allows the last byte of the CRC to achieve closure and permits the ID field to always end in a predictable manner. This is necessary in order to locate the following field in a consistent manner.

15.7 Transition Area (TA_1)

There shall be two Transition Areas in each sector. Each Transition Area shall be equal in length to 12 channel bits.

This area is used for transition from embossed headers to grooved areas. This area shall not contain user information.

15.8 Gap

There is a Gap field in each sector.

The Gap shall be equal in length to 132 Channel bits. It is the first field after TA_1 and gives the drive some time for processing after it has finished reading the header. The contents of the Gap field is not specified, and shall be ignored in interchange.

15.9 Auto Laser Power Control (ALPC)

This field shall be equal in length to 72 Channel bits. It is intended for testing the laser power level.

In the case of R/W or WO sectors the contents of this field are not specified, and shall be ignored in interchange.

15.10 Sync

The sync field is intended to allow the drive to obtain byte synchronization for the following Data field. It shall have a length of 48 Channel bits and be recorded with the bit pattern

0100 0010 0100 0010 0010 0010 0100 0100 1000 0010 0100 10x0

where the value x shall be as follows:

©ISO/IEC 2002 - All rights reserved
Copyright International Organization for Standardization
Reproduced by IHS under license with ISO
No reproduction or networking permitted without license from IHS
Not for Resale

if the first data bits of the following Data field are set to ZERO ZERO, x shall be set to ONE

if the first data bits of the following Data field are not set to ZERO ZERO, x shall be set to ZERO.

15.11 Data field

The Data field is intended for recording user data. It shall consist of either:

– 4 878 bytes comprising

  4 096 user bytes
  762 bytes for CRC, ECC, and Resync
  8 bytes for Sector Written Flag (SWF) containing written copy of the ID track number and sector number
  12 (FF) bytes

– 2 498 bytes comprising

  2 048 user bytes
  442 bytes for CRC, ECC and Resync
  8 bytes for Sector Written Flag (SWF) containing written copy of the ID track number and sector number

The disposition of these bytes in the Data field is specified in annex F.

The first two data bits of the Data field shall be encoded using table 4. When doing this, the last Channel bit from the Sync field shall be used as input to the encoder.

The first three Channel bits of the Data field shall be decoded using table 5. When doing this, the last two Channel bits from the Sync field shall be used as input to the decoder.

15.11.1 User data bytes

These bytes are at the disposal of the user for recording information. There are 4 096/2 048 such bytes depending on the sector format. See Emulation Annex AA for the 1 024-byte and 512-byte sector implementations.

15.11.2 CRC and ECC bytes

The Cyclic Redundancy Check bytes and Error Correction Code bytes are used by the error detection and correction system to rectify erroneous data. The ECC is a Reed-Solomon code of degree 16.

The computation of the check bytes of the CRC and ECC shall be as specified in annex F.

15.11.3 Bytes for Sector Written Flag (SWF)

There shall be 8/8 bytes for Sector Written Flag. The first 3 bytes are recorded with the 3 bytes of the sector's ID information. The remaining 12/0 bytes are set to (FF).

15.11.4 Resync bytes

The Resync bytes enable a drive to regain byte synchronization after a large defect in the data field.

Annex G specifies the Resync bytes and the criteria for selection of which of the two bytes is to be used.

The Resync fields shall be inserted among the rest of the bytes of the Data field as specified in annex F.

15.12 Postamble field (PA_2)

This field shall have a nominal length of 24 Channel bits which shall be used for RLL (1,7) closure. This field shall end in a space to ensure that the Buffer field (see 15.14) shall consist of spaces. Permitted PA_2 patterns can either be PA_1 as defined in clause 15.6, or any other valid RLL (1,7) closure which shall end in space but shall not contain a bit sequence of ONE ONE.

15.13 Buffer field

The Buffer field is used to accommodate the various system tolerances. Causes of variation are as follows: header-to-header spacing as specified in 14.1, tolerance in the start of the VFO_3 field as specified in 15.3, the actual length of the written data as determined by the runout of the track and the speed variations of the disk during writing of the data. Finally, the buffer is used to ensure that all data written previously, the length of which is subject to the above tolerances, has been erased.

15.14 Transition Area (TA_2)

This area is used for transition from grooved areas to embossed headers and shall be equal in length to 12 Channel bits. This area shall not contain user information.

©ISO/IEC 2002 - All rights reserved

Copyright International Organization for Standardization
Reproduced by IHS under license with ISO
No reproduction or networking permitted without license from IHS
Not for Resale

16 Recording code

The 8-bit bytes in the two ID fields and in the data field shall be encoded into Channel bits on the disk according to table 2 and annex G. Channel bits in these fields shall be decoded to information bits according to table 3 and annex G. All other fields in a sector have already been defined in terms of Channel bits. Write pulses shall produce marks in a manner such that the edge between a mark and a space or a space and a mark corresponds to a Channel bit that is a ONE.

The recording code used to record all data in the formatted areas of the disk shall be the run-length limited code known as RLL (1,7) as defined in tables 4 and 5.

Table 4 - Encoding of input bits to Channel bits

Preceding Channel bit	Current input bits	Following input bits	Channel bits RLL(1,7)
0 or 1	00	00 or 01	001
0	00	10 or 11	000
1	00	10 or 11	010
0	01	00 or 01	001
0	01	10 or 11	000
1	01	00	010
1	01	01, 10, or 11	000
0	10	00 or 01	101
0	10	10 or 11	010
0	11	00	010
0	11	01, 10, or 11	100

The coding shall start at the first bit of the first byte of the field to be converted. After a Resync field the RLL (1,7) coding shall start again with the last two input bits of the Resync bytes.

Table 5 - Decoding of Channel bits to information bits

Preceding Channel bits	Current Channel bits	Following Channel bits	Decoded information bits
10	000	00, 01, or 10	00
00 or 01	000	00, 01, or 10	01
00	001	00 or 01	01
01 or 10	001	00 or 01	00
00 or 10	010	00	11
00 or 10	010	01 or 10	10
01	010	00	01
01	010	01 or 10	00
00 or 10	100	00, 01, or 10	11
00 or 10	101	00 or 01	10

©ISO/IEC 2002 - All rights reserved
Copyright International Organization for Standardization
Reproduced by IHS under license with ISO
No reproduction or networking permitted without license from IHS
Not for Resale

17 Formatted Zone

17.1 General description of the Formatted Zone

The Formatted Zone contains all information on the disk relevant for data interchange. The information comprises embossed tracking provisions, embossed headers, and possibly, user-written data. In this clause the term 'data' is reserved for the content of the Data field of a sector, which, in general, is transferred to the host.

Clause 17 defines the layout of the information; the characteristics of signals obtained from this information are specified in section 4 and 6.

17.2 Division of the Formatted Zone

The Formatted Zone shall be divided into zones containing the logical tracks indicated in tables 6 and 7.

The dimensions are given as reference only, and are nominal locations. The tolerance on the location of logical track 0 is specified in clause 13.4. The tolerances on other radii are determined by the tolerance on the track pitch as specified in 13.3.

Table 6 - Layout of the Formatted Zone by Radius

	Radius in mm	
	4 096-byte Sectors	**2 048-byte Sectors**
- Lead-in Zone	62,50 to 62,20	62,50 to 62,16
- Outer Control Track SFP Zone	62,20 to 62,19	62,16 to 62,16
- Outer Manufacturer Zone	62,19 to 62,10	62,16 to 62,10
Guard	62,19 to 62,19	62,36 to 62,36
Test Zone for media manufacturers	62,19 to 62,18	62,16 to 62,15
Write Calibration Zone	62,18 to 62,12	62,15 to 62,12
FB Cal. Zone	62,12 to 62,11	62,12 to 62,11
Reference Read Zone	62,11 to 62,10	62,11 to 62,10
Guard	62,10 to 62,10	62,10 to 62,10
- User Zone	62,10 to 29,70	62,10 to 29,81
- Inner Manufacturer Zone	29,70 to 29,53	29,81 to 29,71
Guard	29,70 to 29,70	29,81 to 29,81
Reference Read Zone	29,70 to 29,69	29,81 to 29,80
Reserved	29,69 to 29,68	29,80 to 29,79
Write Calibration Zone	29,68 to 29,55	29,79 to 29,72
Test Zone for media manufacturers	29,55 to 29,54	29,72 to 29,71
Guard	29,54 to 29,53	29,71 to 29,71
- Inner Control Track SFP Zone	29,53 to 29,53	29,71 to 29,70
- Transition Zone for SFP	29,53 to 29,50	29,71 to 29,50
- Control Track PEP Zone	29,50 to 29,00	29,50 to 29,00
- Reflective Zone	29,00 to 27,00	29,00 to 27,00

©ISO/IEC 2002 - All rights reserved

Copyright International Organization for Standardization
Reproduced by IHS under license with ISO
No reproduction or networking permitted without license from IHS
Not for Resale

Table 7 - Layout of the Formatted Zone by Logical Tracks

	Logical track numbers			
	4 096-byte Sectors (G)	**4 096-byte Sectors (L)**	**2 048-byte Sectors (G)**	**2 048-byte Sectors (L)**
- Lead-in Zone	-1 530 to -366	-3 060 to -1 896	-2 508 to -406	-5 016 to -2 914
- Outer Control Track SFP Zone	-365 to -351	-1 895 to -1 881	-405 to -381	-2 913 to -2 889
- Outer Manufacturer Zone	-350 to -1	-1 880 to -1 531	-380 to -1	-2 888 to -2 509
Guard	-350 to -346	-1 880 to -1 876	-380 to -373	-2 888 to -2 881
Test Zone for media manufacturers	-345 to -326	-1 875 to -1 856	-372 to -340	-2 880 to -2 848
Write Calibration Zone	-325 to -66	-1 855 to -1 596	-339 to -109	-2 847 to -2 617
FB Cal. Zone	-65 to -36	-1 595 to -1 566	-108 to -59	-2 616 to -2 567
Reference Read Zone	-35 to -6	-1 565 to -1 536	-58 to -9	-2 566 to -2 517
Guard	-5 to -1	-1 535 to -1 531	-8 to -1	-2 516 to -2 509
- User Zone	0 to 186 479		0 to 300 899	
- Inner Manufacturer Zone	186 480 to 186 800	186 868 to 187 188	300 900 to 301 210	301 858 to 302 168
Guard	186 480 to 186 482	186 868 to 186 870	300 900 to 300 903	301 858 to 301 861
Reference Read Zone	186 483 to 186 502	186 871 to 186 890	300 904 to 300 927	301 862 to 301 885
Reserved	186 503 to 186 522	186 891 to 186 910	300 928 to 300 951	301 886 to 301 909
Write Calibration Zone	186 523 to 186 777	186 911 to 187 165	300 952 to 301 174	301 910 to 302 132
Test Zone for media manufacturers	186 778 to 186 797	187 166 to 187 185	301 175 to 301 206	302 133 to 302 164
Guard	186 798 to 186 800	187 186 to 187 188	301 207 to 301 210	302 165 to 302 168
- Inner Control Track SFP Zone	186 801 to 186 815	187 189 to 187 203	301 211 to 301 235	302 169 to 302 193
- Transition Zone for SFP	186 816 to 186 867	187 204 to 187 255	301 236 to 301 857	302 194 to 302 815
- Control Track PEP Zone	N/A		N/A	
- Reflective Zone	N/A		N/A	

17.2.1 Lead-in Zone

The Lead-in Zone shall be used for positioning purposes only.

17.2.2 Manufacturer Zones

There shall be an Inner and an Outer Manufacturer Zone. They are provided to allow the media manufacturers and drives to perform tests on the disk, including read and write calibration operations, in an area located away from that intended for user recorded information.

Data patterns contained in the drive test zones for the purpose of calibration are shown in table 8.

Table 8 - Drive test zone data patterns (continued)

4 096-byte sector		
Outer Test Zone for Drive	**Logical Track**	**Data Pattern**
Write Calibration Zone	-325 to -66	-
	-1 855 to -1 596	-
Focus Bias Calibration Zone for Groove	-65 to -51	0000(3T)
	-1 595 to -1 581	CCCC(6T)
Focus Bias Calibration Zone for Land	-50 to -36	CCCC(6T)
	-1 580 to -1 566	0000(3T)
Read Reference Zone for Groove	-35 to -21	90E9(2T-2T-4T)
	-1 565 to -1 551	CCCC(6T)
Read Reference Zone for Land	-20 to -6	CCCC(6T)
	-1 550 to -1 536	90E9(2T-2T-4T)

©ISO/IEC 2002 - All rights reserved
Copyright International Organization for Standardization
Reproduced by IHS under license with ISO
No reproduction or networking permitted without license from IHS
Not for Resale

Inner Test Zone for Drive	Logical Track	Data Pattern
Write Calibration Zone	186 523 to 186 777	-
	186 911 to 187 165	-
Read Reference Zone for Groove	186 493 to 186 502	90E9(2T-2T-4T)
	186 881 to 186 890	CCCC(6T)
Read Reference Zone for Land	186 483 to 186 492	CCCC(6T)
	186 871 to 186 880	90E9(2T-2T-4T)

2 048-byte sector		
Outer Test Zone for Drive	**Logical Track**	**Data Pattern**
Write Calibration Zone	-325 to -66	-
	- 1 855 to - 1 596	-
Focus Bias Calibration Zone for Groove	-108 to -84	0000(3T)
	-2 616 to -2 592	CCCC(6T)
Focus Bias Calibration Zone for Land	-83 to -59	CCCC(6T)
	-2 591 to -2 567	0000(3T)
Read Reference Zone for Groove	-58 to -34	90E9(2T-2T-4T)
	-2 566 to -2 542	CCCC(6T)
Read Reference Zone for Land	-33 to -9	CCCC(6T)
	-2 541 to -2 517	90E9(2T-2T-4T)

Inner Test Zone for Drive	Logical Track	Data Pattern
Write Calibration Zone	300 952 to 301 174	-
	301 910 to 302 132	-
Read Reference Zone for Groove	300 916 to 300 927	90E9(2T-2T-4T)
	301 874 to 301 885	CCCC(6T)
Read Reference Zone for Land	300 904 to 300 915	CCCC(6T)
	301 862 to 301 873	90E9(2T-2T-4T)

17.2.2.1 Outer Manufacturer Zone

The Outer Manufacturer Zone shall comprise 700 / 760 logical tracks.

The Outer Manufacturer Zone is divided into six parts: two Guard bands, a test area for media manufacturers, a write calibration area, a focus bias test area, and a reference read area.

The Test Zone for media manufacturers is intended for quality tests by the media manufacturer and should not be used by drives.

The Write Calibration Zone for drives is intended for tests to enable a drive to set its write power and should not be used by media manufacturers. The tracks used for testing should be chosen from the Write Calibration Zone for drives in a random way, so as to ensure a gradual degradation of the entire Write Calibration Zone due to use. Then each track in this zone will remain representative for the characteristics of tracks in the Data Zone of the disk.

Focus Bias Calibration and Reference Read Calibration data is intended for drives to optimize the optical conditions for reading and writing data. The data contained in these zones is defined in the previous table.

All physical tracks in the Outer Manufacturer Zone shall contain 30/57 sectors.

17.2.2.2 Inner Manufacturer Zone

The Inner Manufacturer Zone is divided into six parts: two guard bands, a reference read area, a reserved area, a write calibration area, and a test area for media manufacturers. This zone may be used in a similar manner as in the outer manufacturer zone described above.

All physical tracks of the Inner Manufacturer zone shall contain 15/28 sectors.

©ISO/IEC 2002 - All rights reserved

Copyright International Organization for Standardization
Reproduced by IHS under license with ISO
No reproduction or networking permitted without license from IHS
Not for Resale

17.2.3 User Zone

The Data fields in the User Zone shall contain user-written data in the format of clause 15. The layout of the User Zone and its sub-divisions is specified in clause 18.

17.2.4 Reflective Zone

This International Standard does not specify the format of the Reflective Zone, except that it shall have the same recording layer as the remainder of the Formatted Zone.

17.2.5 Control Track Zones

The three zones on each side of the disk

Control track PEP Zone
Inner Control Track SFP Zone
Outer Control Track SFP Zone

shall be used for recording control track information.

The control track information shall be recorded in two different formats, the first format in the Control Track PEP Zone, and the second format in the Inner and Outer Control Track SFP Zones.

The Control Track PEP Zone shall be recorded using low frequency phase-encoded modulation.

The Inner and Outer Control Track SFP Zones shall each consist of tracks recorded by the same modulation method and format as is used in the User Zone (see clauses 16 and 18). The Transition Zone for the SFP is an area in which the format changes from the Control Track PEP Zone, which contains no servo information, to a zone including servo information.

All physical tracks in the Inner Control Track SFP Zone shall have 15/28 sectors. All physical tracks in the Outer Control Track SFP Zone shall have 30/57 sectors.

17.3 Control Track PEP Zone

The information contained in the Control Track PEP Zone gives a general characterization of the disk. It specifies the type of disk, the ECC, the baseline reflectance, etc.

This zone shall not contain any servo information. All information shall be pre-recorded in phase-encoded modulation. The marks in all tracks of this zone shall be radially aligned, so as to allow information recovery from this zone without radial tracking being established by the drive.

The read power shall not exceed 0,65 mW.

17.3.1 Recording in the PEP Zone

In the PEP Zone there shall be 561 to 567 PEP-Channel bit cells per physical track. A PEP-Channel bit cell shall be 656 PEP-Channel bits ± 1 PEP-Channel bits long. A PEP-Channel bit is recorded by writing marks in either the first or the second half of the cell.

A mark shall be nominally two PEP-Channel bits long and shall be separated from adjacent marks by a space of nominally two PEP-Channel bits.

A ZERO shall be represented by a change from marks to spaces at the centre of the cell and a ONE by a change from spaces to marks at this centre.

©ISO/IEC 2002 - All rights reserved
Copyright International Organization for Standardization
Reproduced by IHS under license with ISO
No reproduction or networking permitted without license from IHS
Not for Resale

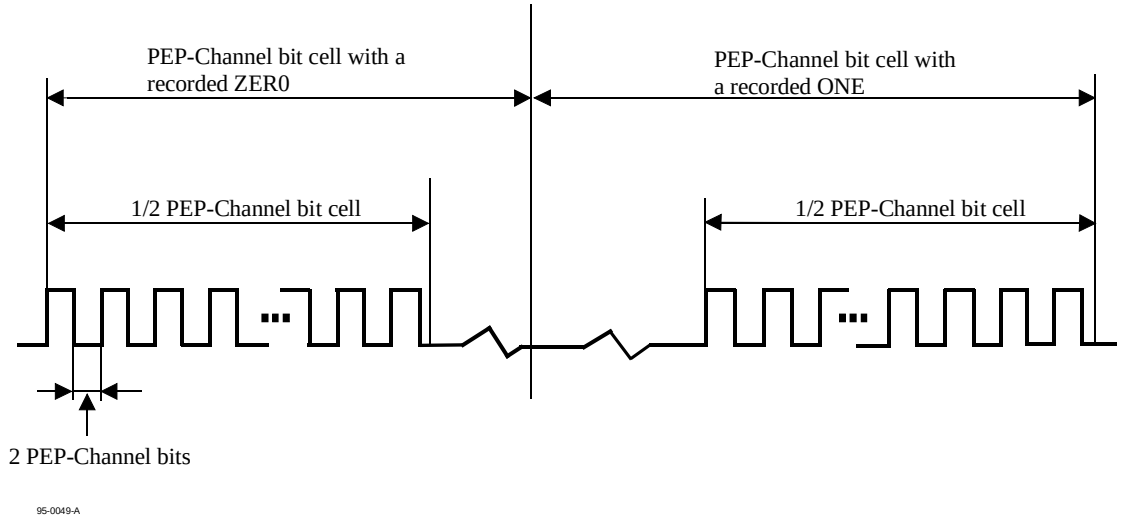

Figure 21 - Example of phase-encoded modulation in the PEP Zone

Requirements for the density of the tracks and the shape of marks in the Control Track PEP Zone are specified in clause 24.

17.3.2 Format of the tracks of the PEP Zone

Each physical track in the PEP Zone shall have three sectors. The numbers below the fields in figure 22 indicate the number of PEP-Channel bits in each field.

|<---------- One physical track (3 sectors) ---------->|

Sector	Gap	Sector	Gap	Sector	Gap
177		177		177	

Figure 22 - Track format in the PEP Zone

The gaps between sectors shall be unrecorded areas having a length corresponding to 10 to 12 PEP-Channel bit cells.

17.3.2.1 Format of a sector

Each sector of 177 PEP-Channel bits shall have the following layout.

|<---------- One sector (177 bits) ---------->|

Preamble	Sync	Sector Number	Data	CRC
16	1	8	144	8

Figure 23 - Sector format in the PEP Zone

17.3.2.1.1 Preamble field

This field shall consist of 16 PEP-Channel bits set to ZERO.

17.3.2.1.2 Sync field

This field shall consist of 1 PEP-Channel bit set to ONE.

17.3.2.1.3 Sector Number field

This field shall consist of eight bits specifying in binary notation the Sector Number from 0 to 2.

17.3.2.1.4 Data field

This field shall comprise 18 8-bit bytes numbered 0 to 17. These bytes shall specify the following.

©ISO/IEC 2002 - All rights reserved

Copyright International Organization for Standardization
Reproduced by IHS under license with ISO
No reproduction or networking permitted without license from IHS
Not for Resale

Byte 0

bit 7 shall be set to ZERO indicating the continuous servo tracking method,

bits 6 to 4 shall be set to 110 indicating a logical ZCAV.

Other settings of these bits are prohibited by this International Standard (see also annex W).

bit 3 shall be set to ZERO

bits 2 to 0 shall be set to 010 indicating RLL (1,7) mark edge modulation,

Other settings of these bits are prohibited by this International Standard.

Byte 1

bit 7 shall be set to ZERO

bits 6 to 4 specify the error correction code:

when set to 010 shall indicate R-S LDC degree 16, and 20 interleaves.
when set to 011 shall indicate R-S LDC degree 16, and 40 interleaves.

Other settings of these bits are prohibited by this International Standard.

bit 3 shall be set to ZERO

bits 2 to 0 these bits shall specify in binary notation the power n of 2 in the following formula which expresses the number of user bytes per sector

$$256 \times 2n$$

therefore, shall be set to :

011 indicating 2 048 user byte per sector media
100 indicating 4 096 user byte per sector media

Values of *n* other than 3 or 4 are prohibited by this International Standard.

Byte 2

This byte shall specify in binary notation the number of sectors in each logical track as follows:

0000 0110 indicating 6 sectors per logical track in 4 096-byte sector media

0000 0111 indicating 7 sectors per logical track in 2 048-byte sector media

Byte 3

This byte shall give the manufacturer's specification for the baseline reflectance *R* of the disk when measured at a nominal wavelength of 660 nm. It is specified as a number *n* such that

$$n = 100\ R.$$

Byte 4

This byte shall specify the sector mark modulation and polarity.

bit 7 shall be set to ONE.

The absolute value of the signal amplitude is given as a number *n* between -15 and -33 such that

$$n = -50\ (I_{sm} / I_{top})$$

where I_{sm} is the signal from the Sector Mark in Channel 1 and I_{top} is the signal from an unrecorded, ungrooved area in the User Zone.

bits 6 to 0 shall express this number *n*. Bit 6 shall be set to ONE to indicate that this number is negative and expressed by bits 5 to 0 in TWO's complement. Recording is high-to-low.

Byte 5

This byte shall specify the capacity of the ODC in Gbytes (with one significant digit to the right of the decimal mark) times 10. For this International Standard, this byte shall be set to (5C) representing a capacity of 9,2 Gbytes.

©ISO/IEC 2002 - All rights reserved
Copyright International Organization for Standardization
Reproduced by IHS under license with ISO
No reproduction or networking permitted without license from IHS
Not for Resale

Byte 6

This byte shall specify in binary notation a number *n* representing 20 times the maximum read power expressed in milliwatts which is permitted for reading the SFP Zone at a rotational frequency of 50 Hz and a wavelength of 660 nm. This number *n* shall be between 60 and 80.

Byte 7

The setting of this byte shall be specified as follows:

0010 0000 Type R/W

0001 0001 Type WO

Other settings of this byte are prohibited by this International Standard (see also annex W).

Byte 8

This byte shall specify the next most significant byte of the ID track number in which the Outer Control Track SFP Zone starts. It shall be set (FE) or (FE) representing the next MSB of ID track number -365/-405.

Byte 9

This byte shall specify the least significant byte of the ID track number in which the Outer Control Track SFP Zone starts. It shall be set (93) or (6B) representing the LSB of ID track number -365/-405.

Byte 10

This byte shall specify the next most significant byte of the ID track number in which the Inner Control Track SFP Zone starts. It shall be set to (6D) or (4C) representing the next MSB of ID Track Number 93 561/150 761.

Byte 11

This byte shall specify the least significant byte of the ID track number in which the Inner Control Track SFP Zone starts. It shall be set to (79) or (E9) representing the LSB of ID Track Number 93 561/150 761.

Byte 12

This byte shall specify the track pitch in micrometres times 100. It shall be set to (41) representing a track pitch of 0,65 μm.

Byte 13

This byte shall be set to (FF).

Byte 14

This byte shall specify the most significant byte of the ID Track Number in which the Outer SFP Zone starts. It shall be set to (FF) or (FF) representing the MSB of ID Track Number –365/-405.

Byte 15

This byte shall specify the most significant byte of the ID track number in which the Inner Control Track SFP Zone starts. It shall be set to (01) or (02) representing the MSB of ID Track Number 93 561/150 761.

Bytes 16 and 17

The contents of these bytes are not specified by this International Standard and shall be ignored in interchange.

17.3.2.1.5 CRC

The eight bits of the CRC shall be computed over the Sector Number field and the Data field of the PEP sector.

The generator polynomial shall be

$$G(x) = x^8 + x^4 + x^3 + x^2 + 1$$

©ISO/IEC 2002 - All rights reserved

Copyright International Organization for Standardization
Reproduced by IHS under license with ISO
No reproduction or networking permitted without license from IHS
Not for Resale

The residual polynomial $R(x)$ shall be

$$R(x) = \left(\sum_{i=144}^{i=151} \overline{a_i} x^i + \sum_{i=0}^{i=143} a_i x^i \right) x^8 \bmod G(x)$$

where a_i denotes a bit of the input data and $\overline{a_i}$ an inverted bit. The highest order bit of the sector number field is a_{151}.

The eight bits c_k of the CRC are defined by

$$R(x) = \sum_{k=0}^{k=7} c_k x^k$$

where c_7 is recorded as the highest order bit of the CRC byte of the PEP sector.

17.3.2.2 Summary of the format of the Data field of a sector

Table 9 - Format of the Data field of a sector of the PEP Zone

Byte \ Bit	7	6	5	4	3	2	1	0
0	Format	Logical ZCAV			0	Modulation code		
1	0	ECC			0	Number of user bytes		
2	Number of sectors in each logical track							
3	Baseline reflectance at 660 nm							
4	0	Amplitude and polarity of pre-formatted data						
5	ODC Capacity							
6	Maximum read power for the SFP Zone at 50Hz and 660 nm							
7	Disk Type							
8	Start Track of Outer SFP Zone, next MSB of ID Track Number							
9	Start Track of Outer SFP Zone, LSB of ID Track Number							
10	Start Track of Inner SFP Zone, next MSB of ID Track Number							
11	Start Track of Inner SFP Zone, LSB of ID Track Number							
12	Track pitch							
13	(FF)							
14	Start Track of Outer SFP Zone, MSB of ID Track Number							
15	Start Track of Inner SFP Zone, MSB of ID Track Number							
16	Not specified by this ECMA Standard							
17	Not specified by this ECMA Standard							

00-0072-A

17.4 Control Track SFP Zones

The two Control Track SFP Zones shall be recorded using the MO recording method in the sector format specified in clause 15. The recorded data marks shall satisfy the requirements for the signals specified in clause 27.

Each sector of the SFP Zones (see 17.2.5) shall include 512 bytes of information numbered 0 to 511;

– a duplicate of the PEP information (18 bytes),

©ISO/IEC 2002 - All rights reserved
Copyright International Organization for Standardization
Reproduced by IHS under license with ISO
No reproduction or networking permitted without license from IHS
Not for Resale

– media information (362 bytes),

– system information (132 bytes),

In the case of 2 048-byte sectors these first 512 bytes shall be followed by 1 536 bytes set to (FF). In the case of 4 096-byte sectors these first 512 bytes shall be followed by 3 584 bytes set to (FF).

17.4.1 Duplicate of the PEP information

Bytes 0 to 17 shall be identical with the 18 bytes of the Data field of a sector of the PEP Zone (see 17.3.2.1.4).

17.4.2 Media information

Bytes 18 to 47 shall specify the conditions for

Wavelength L_1 = 660 nm;

Baseline Reflectance R_1;

and Rotational Frequency N_1 = 50 Hz.

For the value of N one set of write power for the 4T mark is given: it contains three values for the inner, middle and outer radius.

All values specified in bytes 18 to 47 shall be such that the requirements of 11.5 and of clauses 25, 26, 27 and 28 are met (see table 10).

Byte 18

This byte shall specify the wavelength L_1, in nanometres, as a number n between 0 and 255 such that

$$n = 1/5\ L_1$$

This byte shall be set to n = 132 for ODCs according to this International Standard.

Byte 19

This byte shall specify the baseline reflectance R_1 (see 11.5.5) at wavelength L_1 as a number n such that

$$n = 100\ R_1$$

Byte 20

This byte shall specify the rotational frequency N_1, in hertz, as a number n such that

$$n = N_1$$

This byte shall be set to n = 50 for ODCs according to this International Standard.

Byte 21

This byte shall specify the maximum read power P_1 in milliwatts, for the innermost area in the User Zone as a number n between 60 and 80 such that

$$n = 20\ P_1$$

Bytes 22 to 24

These bytes are not used and shall be set to (FF).

The following bytes 25 to 27 shall specify the write power P_w for 4T marks in milliwatts indicated by the manufacturer of the disk (see 25.3.3). P_w is expressed as a number n between 0 and 255 such that

$$n = 5P_w$$

Byte 25

This byte shall specify P_w for

$$r = 30 \text{ mm}$$

©ISO/IEC 2002 - All rights reserved

Copyright International Organization for Standardization
Reproduced by IHS under license with ISO
No reproduction or networking permitted without license from IHS
Not for Resale

Byte 26

This byte shall specify P_w for

r = 45 mm

Byte 27

This byte shall specify P_w for

r = 62 mm

Byte 28 to 43

These bytes shall be set to (FF)

Byte 44

This byte shall be set to (00)

The following bytes 45 to 47 shall specify the d.c. erase power P_e in milliwatts indicated by the manufacturer of the disk (see clause 28). P_e shall be expressed as a number n between 0 and 255 such that

$n = 5 P_e$

Byte 45

This byte shall specify P_e for

r = 30 mm

Byte 46

This byte shall specify P_e for

r = 45 mm

Byte 47

This byte shall specify P_e for

r = 62 mm

Byte 48 to Byte 363

These bytes are not used by this International Standard and shall be set to (FF)

Byte 364

This byte shall specify the polarity of the figure of merit (see 26.1). It shall be set to (01) to mean that the polarity is negative (the direction of Kerr rotation due to the written mark is counterclock-wise).

Byte 365

This byte shall specify the figure of merit F as a number n (see 26.1), such that

$n = 10\,000 F$

Bytes 366 to 383

These bytes shall be set to (FF).

17.4.3 System Information

Bytes 384 to 389 are mandatory. Bytes 384 to 386 shall specify in binary notation the ID Track Number of the last ID track of the User Zone. The total number of ID tracks in this zone equals the ID Track Number of the last ID track of the User Zone increased by 1. For disks with 4 096-byte sectors, the ID Track Number of the last ID track of the User Zone shall be 93 239. For disks with 2 048-byte sectors, the ID Track Number of the last ID track of the User Zone shall be 150 449. Bytes 387 and 388 shall specify the sector sizes in binary notation. Byte 389 shall specify in binary notation the offset for emulated sector sizes 1 024-byte and 512-byte.

These bytes shall be set to (FF).

©ISO/IEC 2002 - All rights reserved
Copyright International Organization for Standardization
Reproduced by IHS under license with ISO
No reproduction or networking permitted without license from IHS
Not for Resale

Byte 384

This byte shall be set to (01) for 4 096-byte sectors, (02) for 2 048-byte sectors, indicating the most significant byte of the number of the last ID track of the User Zone.

Byte 385

This byte shall be set to (6C) for 4 096-byte sectors, (4B) for 2 048-byte sectors, indicating the next most significant byte of the number of the last ID track of the User Zone.

Bytes 386

This byte shall be set to (37) for 4 096-byte sectors, (B1) for 2 048-byte sectors, indicating the least significant byte of the number of the last ID track of the User Zone.

Byte 387

This byte describes the MSB of the media sector size, including emulated sector sizes. It shall be set to (10) for 4 096-byte sector media, (08) for 2 048-byte sector media, (04) for 1 024-byte sector media, and (02) for 512-byte sector media.

Byte 388

This byte describes the LSB of the media sector size, including emulated sector sizes. See annex AA. It shall be set to (00) for all media sector sizes; 4 096-byte sector, 2 048-byte sectors, 1 024-byte sectors, 512-byte sectors.

Byte 389

This byte describes the initial emulation offset number. Initial default setting is (00)

Bytes 390 to 437

These bytes are not specified by this International Standard.

Bytes 438 to 479

These bytes are reserved and shall be set to (FF).

Bytes 480 to 511

These bytes are not specified by this International Standard and may be ignored.

Bytes 512 to 2 047/4 095

These bytes shall be set to (FF).

Table 10 - Summary of media information

Category	Mandatory	Optional or (FF)	(FF)
Media Parameter	0-12, 14, 15		13
Unspecified		16-17	
L_1 & R_1	18-19		
N_1 Values	20-21, 25-27, 44-47		22-24, 28-43
Not used			48 to 363
Figure of Merit	364-365		
Reserved			366-383
Last track number	384-386		
Sector size	387-388		
Emulation offset	389		
Unspecified		390-437	
Reserved			438-479
Unspecified		480-511	
2 048-byte sectors			512-2 047
4 096-byte sectors			512-4 095

©ISO/IEC 2002 - All rights reserved

Copyright International Organization for Standardization
Reproduced by IHS under license with ISO
No reproduction or networking permitted without license from IHS
Not for Resale

18 Layout of the User Zone

18.1 General description of the User Zone

The User Zone data capacity per side is 4,58 Gbytes for disks with 4 096-byte sectors and 4,3 Gbytes for disks with 2 048-byte sectors. The user area spare sectors and the non-usable sectors are included in the above figures.

The location and size of the User Zone are specified in clause 17.

18.2 Divisions of the User Zone

The User Zone shall include four Defect Management Areas (DMA), two at the beginning of the zone and two at the end. The area between the two sets of DMAs is called the User Area.

The entire User Zone shall also be divided into bands as a result of the ZCAV organization of the disk.

Each of these bands shall contain the same number of physical tracks. Each such band is divided into logical tracks which have the same number of sectors. The number of logical tracks per band decreases from band to band moving from the outer radius to the inner radius.

When the sectors contain 4 096 user bytes, the User Zone shall be divided into 16 bands numbered 0 to 15 as shown in tables 11a and 11b.

When the sectors contain 2 048 user bytes, the User Zone shall be divided into 30 bands numbered 0 to 29 as shown in tables 12a and 12b.

The hierarchy is thus:

For 4 096-byte sector disks:	6 sectors	= 1 logical track
	15 540 to 7 770 logical tracks	= 1 band
	16 bands	= the User Zone
For 2 048-byte sector disks:	7 sectors	= 1 logical track
	13 452 to 6 608 logical tracks	= 1 band
	30 bands	= the User Zone

18.3 User Area

The Data fields in the User Area are intended for recording of user data.

The User Area shall consist of:

– a Rewritable Zone, or
– a Write Once Zone.

The User Area shall begin with track 0 and end with track 186 479/300 899. There shall be 1 376/1 200 spare logical tracks in the User Area.

In addition, the User Area shall be partitioned into bands. This International Standard describes one partitioning where each group resides in one band, i.e. there is a total of 16/30 groups.

Type R/W and WO disks shall be partitioned according to methods in 18.6.2 and 18.7.2.

Calculation method from ID field data to Logical Track number is as follows:

Logical Track number = SLT + [i x (LTB/2)] + ID

i = 0 (Groove), 1 (Land)

SLT = Start ID_2 Track number in Band

LTB = Total Logical Tracks per Band
ID = ID Track number

©ISO/IEC 2002 - All rights reserved
Copyright International Organization for Standardization
Reproduced by IHS under license with ISO
No reproduction or networking permitted without license from IHS
Not for Resale

Ex.
ID= 20 000 (Groove in Band 2 of 4 096-byte sector disk)
Logical Track number = (15 281) + (0x14 504/2) + 20 000
= 35 281
ID= 20 000 (Land in Band 2 of 4 096-byte sector disk)
Logical Track number = (15 281) + (1x14 504/2) + 20 000
= 15 281 + 7 252 +20 000
= 42 533

--`,,`,,`-`-`,,`,,`,`,,`---
©ISO/IEC 2002 - All rights reserved

Copyright International Organization for Standardization
Reproduced by IHS under license with ISO
No reproduction or networking permitted without license from IHS
Not for Resale

Table 11a - Relation between Logical Track number and ID field data of 4 096-byte sector disks: 16 Bands

		Band Start ID field data				Logical Track Number
Band No.		Pre-formatted Header 1		Pre-formatted Header 2		
		ID_1 Track Number	ID_1 Sector Number	ID_2 Track Number	ID_2 Sector Number	Band Start
0	0-G	0	0	0	0	0
	0-L	5	0			7 770
1	1-G	7 770	0	7 770	0	15 540
	1-L	7 774	5			23 051
2	2-G	15 281	0	15 281	0	30 562
	2-L	15 285	4			37 814
3	3-G	22 533	0	22 533	0	45 066
	3-L	22 537	3			52 059
4	4-G	29 526	0	29 526	0	59 052
	4-L	29 530	2			65 786
5	5-G	36 260	0	36 260	0	72 520
	5-L	36 264	1			78 995
6	6-G	42 735	0	42 735	0	85 470
	6-L	42 739	0			91 686
7	7-G	48 951	0	48 951	0	97 902
	7-L	48 954	5			103 859
8	8-G	54 908	0	54 908	0	109 816
	8-L	54 911	4			115 514
9	9-G	60 606	0	60 606	0	121 212
	9-L	60 609	3			126 651
10	10-G	66 045	0	66 045	0	132 090
	10-L	66 048	2			137 270
11	11-G	71 225	0	71 225	0	142 450
	11-L	71 228	1			147 371
12	12-G	76 146	0	76 146	0	152 292
	12-L	76 149	0			156 954
13	13-G	80 808	0	80 808	0	161 616
	13-L	80 810	5			166 019
14	14-G	85 211	0	85 211	0	170 422
	14-L	85 213	4			174 566
15	15-G	89 355	0	89 355	0	178 710
	15-L	89 357	3			182 595

©ISO/IEC 2002 - All rights reserved
Copyright International Organization for Standardization
Reproduced by IHS under license with ISO
No reproduction or networking permitted without license from IHS
Not for Resale

Table 11b - Logical Track Table of 4 096-byte sector disks : 16 Bands

Band No.	Logical Tracks per Band	Groove/ Land	Logical Track Number						
			Band Start	Buffer Start	Data Start	Spares Start	Buffer Start	Test Start	Buffer Start
0	15 540	0-G	-	0	6	7 677	7 720	7 730	7 740
		0-L	-	7 770	7 776	15 447	15 490	15 500	15 510
1	15 022	1-G	15 540	15 550	15 570	22 958	23 001	23 011	23 021
		1-L	23 051	23 061	23 081	30 469	30 512	30 522	30 532
2	14 504	2-G	30 562	30 572	30 592	37 721	37 764	37 774	37 784
		2-L	37 814	37 824	37 844	44 973	45 016	45 026	45 036
3	13 986	3-G	45 066	45 075	45 096	51 966	52 009	52 019	52 029
		3-L	52 059	52 068	52 089	58 959	59 002	59 012	59 022
4	13 468	4-G	59 052	59 061	59 082	65 693	65 736	65 746	65 756
		4-L	65 786	65 795	65 816	72 427	72 470	72 480	72 490
5	12 950	5-G	72 520	72 529	72 550	78 902	78 945	78 955	78 965
		5-L	78 995	79 004	79 025	85 377	85 420	85 430	85 440
6	12 424	6-G	85 470	85 478	85 500	91 593	91 636	91 646	91 656
		6-L	91 686	91 694	91 716	97 809	97 852	97 862	97 872
7	11 914	7-G	97 902	97 910	97 932	103 766	103 809	103 819	103 829
		7-L	103 859	103 867	103 889	109 723	109 766	109 776	109 786
8	11 396	8-G	109 816	109 824	109 846	115 421	115 464	115 474	115 484
		8-L	115 514	115 522	115 544	121 119	121 162	121 172	121 182
9	10 878	9-G	121 212	121 219	121 242	126 558	126 601	126 611	126 621
		9-L	126 651	126 658	126 681	131 997	132 040	132 050	132 060
10	10 360	10-G	132 090	132 097	132 120	137 177	137 220	137 230	137 240
		10-L	137 270	137 277	137 300	142 357	142 400	142 410	142 420
11	9 842	11-G	142 450	142 457	142 480	147 278	147 321	147 331	147 341
		11-L	147 371	147 378	147 401	152 199	152 242	152 252	152 262
12	9 324	12-G	152 292	152 298	152 322	156 861	156 904	156 914	156 924
		12-L	156 954	156 960	156 984	161 523	161 566	161 576	161 586
13	8 806	13-G	161 616	161 622	161 646	165 926	165 969	165 979	165 989
		13-L	166 019	166 025	166 049	170 329	170 372	170 382	170 392
14	8 288	14-G	170 422	170 428	170 452	174 473	174 516	174 526	174 536
		14-L	174 566	174 572	174 596	178 617	178 660	178 670	178 680
15	7 770	15-G	178 710	178 715	178 740	182 526	182 575	182 585	N/A
		15-L	182 595	182 600	182 625	186 411	186 460	186 470	N/A

©ISO/IEC 2002 - All rights reserved
Copyright International Organization for Standardization
Reproduced by IHS under license with ISO
No reproduction or networking permitted without license from IHS
Not for Resale

Table 12a. – Relation between Logical Track number, ID field data. 2 048-byte sector disks: 30 Bands

		Band Start ID field data				Logical Track Number
Band No.		Pre-formatted Header 1		Pre-formatted Header 2		
		ID_1 Track Number	ID_1 Sector Number	ID_2 Track Number	ID_2 Sector Number	Band Start
0	0-G	0	0	0	0	0
	0-L	8	1			6 726
1	1-G	6 726	0	6 726	0	13 452
	1-L	6 734	0			20 060
2	2-G	13 334	0	13 334	0	26 668
	2-L	13 341	6			33 158
3	3-G	19 824	0	19 824	0	39 648
	3-L	19 831	5			46 020
4	4-G	26 196	0	26 196	0	52 392
	4-L	26 203	4			58 646
5	5-G	32 450	0	32 450	0	64 900
	5-L	32 457	3			71 036
6	6-G	38 586	0	38 586	0	77 172
	6-L	38 593	2			83 190
7	7-G	44 604	0	44 604	0	89 208
	7-L	44 611	1			95 108
8	8-G	50 504	0	50 504	0	101 008
	8-L	50 511	0			106 790
9	9-G	56 286	0	56 286	0	112 572
	9-L	56 292	6			118 236
10	10-G	61 950	0	61 950	0	123 900
	10-L	61 956	5			129 446
11	11-G	67 496	0	67 496	0	134 992
	11-L	67 502	4			140 420
12	12-G	72 924	0	72 924	0	145 848
	12-L	72 930	3			151 158
13	13-G	78 234	0	78 234	0	156 468
	13-L	78 240	2			161 660
14	14-G	83 426	0	83 426	0	166 852
	14-L	83 432	1			171 826
15	15-G	88 500	0	88 500	0	177 000
	15-L	88 506	0			181 956

©ISO/IEC 2002 - All rights reserved
Copyright International Organization for Standardization
Reproduced by IHS under license with ISO
No reproduction or networking permitted without license from IHS
Not for Resale

Table 12a. - continued – Relation between Logical Track number, ID field data. 2 048-byte sector disks : 30 Bands

16	16-G	93 456	0	93 456	0	186 912
	16-L	93 461	6			191 750
17	17-G	98 294	0	98 294	0	196 588
	17-L	98 299	5			201 308
18	18-G	103 014	0	103 014	0	206 028
	18-L	103 019	4			210 630
19	19-G	107 616	0	107 616	0	215 232
	19-L	107 621	3			219 716
20	20-G	112 100	0	112 100	0	224 200
	20-L	112 105	2			228 566
21	21-G	116 466	0	116 466	0	232 932
	21-L	116 471	1			237 180
22	22-G	120 714	0	120 714	0	241 428
	22-L	120 719	0			245 558
23	23-G	124 844	0	124 844	0	249 688
	23-L	124 848	6			253 700
24	24-G	128 856	0	128 856	0	257 712
	24-L	128 860	5			261 606
25	25-G	132 750	0	132 750	0	265 500
	25-L	132 754	4			269 276
26	26-G	136 526	0	136 526	0	273 052
	26-L	136 530	3			276 710
27	27-G	140 184	0	140 184	0	280 368
	27-L	140 188	2			283 908
28	28-G	143 724	0	143 724	0	287 448
	28-L	143 728	1			290 870
29	29-G	147 146	0	147 146	0	294 292
	29-L	147 150	0			297 596

©ISO/IEC 2002 - All rights reserved

Copyright International Organization for Standardization
Reproduced by IHS under license with ISO
No reproduction or networking permitted without license from IHS
Not for Resale

Table 12b. – Logical Track Table of 2 048-byte sector disks : 30 groups

Band No.	Logical Tracks per Band	Land / Groove	Logical Track Number						
			Band Start	Buffer Start	Data Start	Spares Start	Buffer Start	Test Start	Buffer Start
0	13 452	0-G	-	0	6	6 623	6 643	6 660	6 677
		0-L	-	6 726	6 732	13 349	13 369	13 386	13 403
1	13 216	1-G	13 452	13 468	13 501	19 957	19 977	19 994	20 011
		1-L	20 060	20 076	20 109	26 565	26 585	26 602	26 619
2	12 980	2-G	26 668	26 684	26 717	33 055	33 075	33 092	33 109
		2-L	33 158	33 174	33 207	39 545	39 565	39 582	39 599
3	12 744	3-G	39 648	39 664	39 697	45 917	45 937	45 954	45 971
		3-L	46 020	46 036	46 069	52 289	52 309	52 326	52 343
4	12 508	4-G	52 392	52 408	52 441	58 543	58 563	58 580	58 597
		4-L	58 646	58 662	58 695	64 797	64 817	64 834	64 851
5	12 272	5-G	64 900	64 915	64 949	70 933	70 953	70 970	70 987
		5-L	71 036	71 051	71 085	77 069	77 089	77 106	77 123
6	12 036	6-G	77 172	77 187	77 221	83 087	83 107	83 124	83 141
		6-L	83 190	83 205	83 239	89 105	89 125	89 142	89 159
7	11 800	7-G	89 208	89 223	89 257	95 005	95 025	95 042	95 059
		7-L	95 108	95 123	95 157	100 905	100 925	100 942	100 959
8	11 564	8-G	101 008	101 022	101 057	106 687	106 707	106 724	106 741
		8-L	106 790	106 804	106 839	112 469	112 489	112 506	112 523
9	11 328	9-G	112 572	112 586	112 621	118 133	118 153	118 170	118 187
		9-L	118 236	118 250	118 285	123 797	123 817	123 834	123 851
10	11 092	10-G	123 900	123 914	123 949	129 343	129 363	129 380	129 397
		10-L	129 446	129 460	129 495	134 889	134 909	134 926	134 943
11	10 856	11-G	134 992	135 006	135 041	140 317	140 337	140 354	140 371
		11-L	140 420	140 434	140 469	145 745	145 765	145 782	145 799
12	10 620	12-G	145 848	145 861	145 897	151 055	151 075	151 092	151 109
		12-L	151 158	151 171	151 207	156 365	156 385	156 402	156 419
13	10 384	13-G	156 468	156 481	156 517	161 557	161 577	161 594	161 611
		13-L	161 660	161 673	161 709	166 749	166 769	166 786	166 803
14	10 148	14-G	166 852	166 865	166 901	171 823	171 843	171 860	171 877
		14-L	171 926	171 939	171 975	176 897	176 917	176 934	176 951
15	9 912	15-G	177 000	177 012	177 049	181 853	181 873	181 890	181 907
		15-L	181 956	181 968	182 005	186 809	186 829	186 846	186 863

--`,,`,,`-`-`,,`,,`,`,,`---
©ISO/IEC 2002 - All rights reserved
Copyright International Organization for Standardization
Reproduced by IHS under license with ISO
No reproduction or networking permitted without license from IHS
Not for Resale

Table 12b. - continued – Logical Track Table of 2 048-byte sector disks : 30 groups

16	9 676	16-G	186 912	186 924	186 961	191 647	191 667	191 684	191 701
		16--L	191 750	191 762	191 799	196 485	196 505	196 522	196 539
17	9 440	17-G	196 588	196 600	196 637	201 205	201 225	201 242	201 259
		17-L	201 308	201 320	201 357	205 925	205 945	205 962	205 979
18	9 204	18-G	206 028	206 040	206 077	210 527	210 547	210 564	210 581
		18-L	210 630	210 642	210 679	215 129	215 149	215 166	215 183
19	8 968	19-G	215 232	215 243	215 281	219 613	219 633	219 650	219 667
		19-L	219 716	219 727	219 765	224 097	224 117	224 134	224 151
20	8 732	20-G	224 200	224 211	224 249	228 463	228 483	228 500	228 517
		20-L	228 566	228 577	228 615	232 829	232 849	232 866	232 883
21	8 496	21-G	232 932	232 943	232 981	237 077	237 097	237 114	237 131
		21-L	237 180	237 191	237 229	241 325	241 345	241 362	241 379
22	8 260	22-G	241 428	241 438	241 477	245 455	245 475	245 492	245 509
		22-L	245 558	245 568	245 607	249 585	249 605	249622	249 639
23	8 024	23-G	249 688	249 698	249 737	253 597	253 617	253 634	253 651
		23-L	253 700	253 710	253 749	257 609	257 629	257 646	257 663
24	7 788	24-G	257 712	257 722	257 761	261 503	261 523	261 540	261 557
		24-L	261 606	261 616	261 655	265 397	265 417	265 434	265 451
25	7 552	25-G	265 500	265 510	265 549	269 173	269 193	269 210	269 227
		25-L	269 276	269 286	269 325	272 949	272 969	272 986	273 003
26	7 316	26-G	273 052	273 061	273 101	276 607	276 627	276 644	276 661
		26-L	276 710	276 719	276 759	280 265	280 285	280 302	280 319
27	7 080	27-G	280 368	280 377	280 417	283 805	283 825	283 842	283 859
		27-L	283 908	283 917	283 957	287 345	287 365	287 382	287 399
28	6 844	28-G	287 448	287 457	287 497	290 767	290 787	290 804	290 821
		28-L	290 870	290 879	290 919	294 189	294 209	294 226	294 243
29	6 608	29-G	294 292	294 300	294 341	297 536	297 562	297 579	N/A
		29-L	297 596	297 604	297 645	300 840	300 866	300 883	N/A

18.4 Defect Management Areas (DMAs)

The four Defect Management Areas contain information on the structure of the User Area and on the defect management. Each DMA shall have a length of 36 sectors for 4 096-byte sectors or 42 sectors for 2 048-byte sectors. The addresses of the first sector of each DMA is given by table 13.

©ISO/IEC 2002 - All rights reserved

Copyright International Organization for Standardization
Reproduced by IHS under license with ISO
No reproduction or networking permitted without license from IHS
Not for Resale

Table 13 - Location of the DMAs

	4 096-byte sectors		2 048-byte sectors	
DMA Number	Track Number	Sector Number	Track Number	Sector Number
DMA1	0	0	0	0
DMA2	7 770	0	6 726	0
DMA3	182 569	0	297 556	0
DMA4	186 454	0	300 860	0

Each DMA shall contain a Disk Definition Structure, a Primary Defect List (PDL) and a Secondary Defect List (SDL). The contents of the four PDLs shall be identical and the contents of the SDLs shall be identical. The only differences between the four DDSs shall be the pointers to each associated PDL and SDL.

After initialization, each DMA shall have the following contents:

– the first sector shall contain the DDS;

– the second sector shall be the first sector of the PDL for Types R/W;

– the SDL shall begin in the first sector following the PDL for Types R/W;

The lengths of the PDL and SDL are determined by the number of entries in them. The contents of the remaining sectors of the DMAs after the SDL are not specified for Types R/W and WO and shall be ignored during interchange.

The start address of a PDL and that of the SDL within each DDS shall reference the PDL and the SDL in the same DMA.

18.5 Disk Definition Structure (DDS)

The DDS shall consist of a table with a length of one sector. It specifies the method of initialization of the disk, the division of the User Area into groups, the kind of data sectors within each group, and the start addresses of the PDL and SDL. The DDS shall be recorded in the first sector of each DMA at the end of initialization of the disk.

Tables 14 and 15 summarize the information that shall be recorded in each of the four DDSs.

©ISO/IEC 2002 - All rights reserved
Copyright International Organization for Standardization
Reproduced by IHS under license with ISO
No reproduction or networking permitted without license from IHS
Not for Resale

Table 14 - Byte assignment of the Disk Definition Structure (4 096-byte sector)

Byte No.	Content	Mandatory Settings	
		R/W	WO
0	DDS Identifier	(0A)	(05)
1	DDS Identifier	(0A)	(05)
2	Reserved	(00)	(00)
3	Disk Certified Disk Not Certified	(01) (02)	(01) (02)
4	Number of Groups MSB	(00)	(00)
5	Number of Groups LSB	(10)	(10)
6	Reserved	(00)	(00)
7	Reserved	(00)	(00)
8	Reserved	(00)	(00)
9	Reserved	(00)	(00)
10	Reserved	(00)	(00)
11	Reserved	(00)	(00)
12	Reserved	(00)	(00)
13	Reserved	(00)	(00)
14	Start of PDL, Track MSB	-	-
15	Start of PDL, Track	-	-
16	Start of PDL, Track LSB	-	-
17	Start of PDL, Sector Number	-	-
18	Start of SDL, Track MSB	-	-
19	Start of SDL, Track	-	-
20	Start of SDL, Track LSB	-	-
21	Start of SDL, Sector Number	-	-
22	Band 0 Type	(01)	(04)
23	Band 1 Type	(01)	(04)
	:	:	:
36	Band 14 Type	(01)	(04)
37	Band 15 Type	(01)	(04)
38	Sector Size MSB (512, 1 024, 4 096)	(02) or (04) or (10)	(10)
39	Sector Size LSB	(00)	(00)
40	Emulation Offset	-	(00)
41 to 88	Unspecified	-	-
89 to 4 095	Reserved	(00)	(00)

In the above table, the symbol (-) means that the appropriate value is to be entered in the DDS.

©ISO/IEC 2002 - All rights reserved

Copyright International Organization for Standardization
Reproduced by IHS under license with ISO
No reproduction or networking permitted without license from IHS
Not for Resale

Table 15 - Byte assignment of the Disk Definition Structure (2 048-byte sector)

Byte No.	Content	Mandatory Settings	
		R/W	WO
0	DDS Identifier	(0A)	(05)
1	DDS Identifier	(0A)	(05)
2	Reserved	(00)	(00)
3	Disk Certified Disk Not Certified	(01) (02)	(01) (02)
4	Number of Groups MSB	(00)	(00)
5	Number of Groups LSB	(1E)	(1E)
6	Reserved	(00)	(00)
7	Reserved	(00)	(00)
8	Reserved	(00)	(00)
9	Reserved	(00)	(00)
10	Reserved	(00)	(00)
11	Reserved	(00)	(00)
12	Reserved	(00)	(00)
13	Reserved	(00)	(00)
14	Start of PDL, Track MSB	-	-
15	Start of PDL, Track	-	-
16	Start of PDL, Track LSB	-	-
17	Start of PDL, Sector Number	-	-
18	Start of SDL, Track MSB	-	-
19	Start of SDL, Track	-	-
20	Start of SDL, Track LSB	-	-
21	Start of SDL, Sector Number	-	-
22	Band 0 Type	(01)	(04)
23	Band 1 Type	(01)	(04)
	:	:	:
50	Band 28 Type	(01)	(04)
51	Band 29 Type	(01)	(04)
52	Sector Size MSB (2 048)	(08)	(08)
53	Sector Size LSB	(00)	(00)
54	Emulation Offset	(00)	(00)
55 to 102	Unspecified	-	-
103 to 2 047	Reserved	(00)	(00)

In the above table, the symbol (-) means that the appropriate value is to be entered in the DDS.

18.6 Rewritable Zone

Type R/W disks shall have a Rewritable Zone. The Rewritable Zone is intended for the user to write data into.

©ISO/IEC 2002 - All rights reserved
Copyright International Organization for Standardization
Reproduced by IHS under license with ISO
No reproduction or networking permitted without license from IHS
Not for Resale

18.6.1 Location

For Type R/W the Rewritable Zone shall extend from sector 0 of track 6 to the last sector of track 7 769/6 725, sector 0 of track 7 776/6 732 to the last sector of track 182 568/29 7555, and sector 0 of track 182 575/297 562 to the last sector of track 186 453/300 859. Every band of these disks shall be recorded as specified in bytes 22 to 37/51 of the DDS as being Rewritable. This discontinuity is due to the placement of the DMA areas within the user zone.

The remaining DDS gap shall be ignored in interchange.

18.6.2 Partitioning

During initialization of the disk, the User Zone shall be partitioned into 16/30 consecutive groups (see tables 11, 12). Each group shall comprise tracks of data sectors followed by tracks of spare sectors.

18.7 Write Once Zone

Type WO shall contain a Write Once Zone. The Write Once Zone is intended for the user to write data into.

18.7.1 Location

For Type WO the Write Once Zone shall extend from sector 0 of track 6 to the last sector of track 7 769/6 725, sector 0 of track 7 776/6 732 to the last sector of track 182 568/297 555, and sector 0 of track 182 575/297 562 to the last sector of track 186 453/300 859. Every band of these disks shall be recorded as specified in bytes 22 to 37/51 of the DDS as being Write Once. This discontinuity is due to the placement of the DMA areas within the user zone.

The remaining DDS gap shall be ignored in interchange.

18.7.2 Partitioning

During initialization of the disk, the Write Once Zone shall be partitioned into 16/30 consecutive groups. Each band shall comprise full tracks of data sectors followed by full tracks of spare sectors.

19 Defect Management in the Rewritable and Write Once Zones

Defective sectors on the disk shall be replaced by good sectors according to the defect management scheme described below. Each side of the disk shall be initialized before use. This International Standard allows media initialization with or without certification. Defective sectors found during certification are handled by a Sector Slipping Algorithm. Defective sectors found after initialization are handled by a Linear Replacement Algorithm. The total number of defective sectors on a side of the disk, replaced by both algorithms, shall not be greater than 8 191/8 191.

19.1 Initialization of the disk

During initialization of the disk, the four DMAs are recorded prior to the first use of the disk. The User Area is divided into Bands, each containing data sectors and spare sectors. Media initialization can include a certification of the rewritable Bands and Write Once Bands, whereby defective sectors are identified and skipped.

For Types WO disks only a single initialization is allowed. Once the DMAs are recorded, it indicates that the disk is initialized and that no further initialization is permitted. All sectors in the write once zone of Type WO shall be in the erased state at the end of initialization. All DDS parameters shall be recorded in the four DDS sectors. The PDL and SDL shall be recorded in the four DMAs. The content of the PDLs and SDLs are shown in tables 14 and 15.

19.2 Certification

If the disk is certified, the certification shall be applied to all sectors of rewritable and WO bands in the User Area. The method of certification is not stated by this International Standard. It may involve erasing, writing, and reading of sectors. Defective sectors found during certification shall be handled by the Slipping Algorithm (see 19.2.1) or, where applicable, by the Linear Replacement Algorithm (see 19.2.2). Defective sectors shall not be used for reading or writing. Guidelines for replacing defective sectors are given in annex U.

19.2.1 Slipping Algorithm

The Slipping Algorithm shall be applied individually to each and every band on the disk if certification is performed.

A defective data sector found during certification shall be replaced by the first good sector following the defective sector, and so causes a slip of one sector towards the end of the band. The last data sectors will slip into the spare sector area. The address of the defective sector is written in the PDL. If no defective sectors are found during certification, an empty PDL shall be recorded.

©ISO/IEC 2002 - All rights reserved

Copyright International Organization for Standardization
Reproduced by IHS under license with ISO
No reproduction or networking permitted without license from IHS
Not for Resale

The addresses of spare sectors, beyond the last data sector slipped into the spare area (if any), which are found to be defective during certification shall be recorded in the PDL. Thus, the number of available spare sectors is diminished accordingly.

Additionally, each band contains a separate spare area for the groove and land recording sectors, located on groove recording and land recording tracks respectively. During certification, as in normal recording, the groove area of a band is tested first. If defective sectors are found, they are slipped and replaced by spare sectors in the groove spare area. Following this process, the land area is then tested. Likewise, if defective sectors are found, they are slipped and replaced by spare sectors in the land spare area.

If one of two spare sector area of a band becomes exhausted during certification, the defective sector shall be handled by the Linear Replacement Algorithm. This process involves assigning a replacement sector from the spare area of another band and cannot be accomplished until the other band has been certified. This is due to the fact that the next available spare sector is not known until its group is certified, i.e. the Slipping Algorithm has been applied.

19.2.2 Linear Replacement Algorithm

The Linear Replacement Algorithm is used to handle defective sectors found after certification. It is also used during certification in the event of the spare area of a Band becoming exhausted.

The defective sector shall be replaced by the first available spare sector of the Band. In a similar manner as in the slipping algorithm, both groove and land recording tracks have their own spare areas located on the groove and land recording tracks respectively.

If a replacement sector is found to be defective, it shall be replaced by the next available spare sector in that band. The addresses of the defective sector and the replacement sector shall be recorded in the SDL.

If there are no spare sectors left in the Band, the defective sector shall be replaced by the first available spare sector of another Band.

The addresses of sectors already recorded in the PDL shall not be recorded in the SDL.

If a replacement sector listed in the SDL is later found to be defective, it shall be dealt with by making a new entry in the SDL indicating a replacement sector for that defective sector.

19.3 Disks not certified

The Linear Replacement Algorithm is also used to handle sectors found defective on disks which have not been certified.

The defective sector shall be replaced by the first available spare sector of the Band. If there are no spare sectors left in the Band, the defective data and spare sector shall be replaced by the first available spare sector of another Band. The addresses of the defective sector and the replacement sector shall be recorded in the SDL. If a replacement sector is found to be defective, it shall be replaced by the next available spare sector in that Band.

If a replacement sector listed in the SDL is later found to be defective, it shall be dealt with by making a new entry in the SDL indicating a replacement sector for that defective sector.

19.4 Write procedure

When writing or reading data in the sectors of a Band, all defective sectors listed in the PDL shall be skipped and the data shall be written in the next data sector according to the Slipping Algorithm. If a sector to be written is listed in the SDL, the data shall be written in the spare sector pointed to by the SDL, according to the Linear Replacement Algorithm.

For Type WO after initialization, all sectors in the User Area shall be in the erased state. Erasing of sectors in the User Area after initialization is not permitted before writing a sector in the User Area of a Type WO, it shall be determined whether or not the sector has been written. If the sector has been written, a write operation is not permitted. During write operations, sectors shall always be recorded with CRC and ECC, and the 8 SWF bytes as specified by this International Standard. See also annex Y for guidelines for the use of Types WO.

19.5 Primary Defect List (PDL)

The PDL shall consist of bytes specifying

– the length of the PDL,

– the sector addresses of defective sectors, identified at initialization, in ascending order of track and sector addresses.

©ISO/IEC 2002 - All rights reserved
Copyright International Organization for Standardization
Reproduced by IHS under license with ISO
No reproduction or networking permitted without license from IHS
Not for Resale

Table 16 shows the PDL byte layout. All remaining bytes of the last sector in which the Primary Defect List is recorded, shall be set to (FF). If no defective sectors are detected, then the first defective sector address is set to (FF) and bytes specifying the number of entries are set to (00).

During initialization, a PDL shall be recorded; this PDL may be empty.

Table 16 - Primary Defect List

Byte No.	Description
0	(00) PDL Identifier
1	(01) PDL Identifier
2	Number of entries MSB (each entry is 4 bytes long)
3	Number of entries LSB (If bytes 2 and 3 are set to (00), then byte 3 is the end of the PDL)
4	Address of the first defective sector (track number MSB)
5	Address of the first defective sector (track number)
6	Address of the first defective sector (track number LSB)
7	Address of the first defective sector (sector number)
.	.
.	.
.	.
n-3	Address of the ((*n*-3)/4th) defective sector (track number MSB)
n-2	Address of the ((*n*-3)/4th) defective sector (track number)
n-1	Address of the ((*n*-3)/4th) defective sector (track number LSB)
n	Address of the ((*n*-3)/4th) defective sector (sector number)

19.6 Secondary Defect List (SDL)

The SDL is used to record the addresses of data and spare sectors which have become defective after initialization and those of their respective replacements. Eight bytes are used for each entry. The first 4 bytes specify the address of the defective sector and the next 4 bytes specify the address of the replacement sector.

The SDL shall consist of bytes identifying the SDL, specifying the length of the SDL, and of a list containing the addresses of defective sectors and those of their replacement sectors. The addresses of the data and spare defective sectors shall be in ascending order. Table 17 shows the SDL layout. All remaining bytes of the last sector in which the SDL is recorded shall be set to (FF). An empty SDL shall consist of bytes 0 to 3 as shown in table 17; bytes 2 and 3 shall be set to (00).

©ISO/IEC 2002 - All rights reserved

Copyright International Organization for Standardization
Reproduced by IHS under license with ISO
No reproduction or networking permitted without license from IHS
Not for Resale

Table 17 - Secondary Defect List

Byte No.	Description
0	(00) SDL Identifier
1	(02) SDL Identifier
2	Number of addresses in the SDL, MSB (each entry is 8 bytes long)
3	Number of addresses in the SDL, LSB (If bytes 2 and 3 are set to (00), then byte 3 is the end of the SDL)
4	Address of the first defective sector (track number, MSB)
5	Address of the first defective sector (track number)
6	Address of the first defective sector (track number, LSB)
7	Address of the first defective sector (sector number)
8	Address of the first replacement sector (track number, MSB)
9	Address of the first replacement sector (track number)
10	Address of the first replacement sector (track number, LSB)
11	Address of the first replacement sector (sector number)
.	.
.	.
.	.
n-7	Address of the last defective sector (track number, MSB)
n-6	Address of the last defective sector (track number)
n-5	Address of the last defective sector (track number, LSB)
n-4	Address of the last defective sector (sector number)
n-3	Address of the last replacement sector (track number, MSB)
n-2	Address of the last replacement sector (track number)
n-1	Address of the last replacement sector (track number, LSB)
n	Address of the last replacement sector (sector number)

Section 4 - Characteristics of embossed information

20 Method of testing

The format of the embossed information on the disk is defined in clauses 13 to 18. Clauses 21 to 23 specify the requirements for the signals from grooves, Headers, and Control Track PEP marks, as obtained when using the Reference Drive specified in clause 9.

20.1 Environment

All signals specified in clauses 21 to 24 shall be within their specified ranges with the cartridge in any environment in the range of allowed operating environments defined in 8.1.2.

20.2 Use of the Reference Drive

All signals specified in clauses 21 to 24 shall be measured in the indicated channels of the Reference Drive. The drive shall have the following characteristics for the purpose of these tests.

20.2.1 Optics and mechanics

The focused optical beam shall have the properties defined in 9.2 a) to f). The disk shall rotate as specified in 9.5.

20.2.2 Read power

The read power is the optical power incident at the entrance surface, used when reading, and is specified as follows for the stated zones (see clause 17):

a) PEP Zone

The read power shall not exceed the value specified in 17.3.

b) User zone

The read power shall be in the range given in byte 21 of the SFP Zone (see 17.4.2). The test read power shall be 1,5 mW.

©ISO/IEC 2002 - All rights reserved
Copyright International Organization for Standardization
Reproduced by IHS under license with ISO
No reproduction or networking permitted without license from IHS
Not for Resale

20.2.3 Read channels

The drive shall have a read Channel, in which the total amount of light in the exit pupil of the objective lens is measured. This Channel shall have the implementation as given by Channel 1 in 9.1.

20.2.4 Tracking

During the measurement of the signals, the focus of the optical beam shall have an axial deviation of not more than

$$e_{max}\,(\text{axial}) = 0{,}7\ \mu\text{m}$$

from the recording layer, and it shall have a radial deviation of not more than

$$e_{max}\,(\text{radial}) = 0{,}09\ \mu\text{m}$$

from the centre of a track.

20.3 Definition of signals

Figure 24 shows the signals specified in clauses 21 to 24.

All signals are linearly related to currents through a photodiode detector, and are therefore linearly related to the optical power falling on the detector.

I_1 and I_2 are the outputs of the two halves of the split photodiode detector in the Tracking Channel (see 9.1 and figure 24a).

Channel 1 is the sum of the two photo detectors in the optical system (see 9.1) as processed by the bottom-hold circuit and low pass filters described in annex P. I_{IG} and I_{OL} indicate the on-track signals of groove tracks and land tracks in Channel 1 as measured in unrecorded areas.

©ISO/IEC 2002 - All rights reserved

Copyright International Organization for Standardization
Reproduced by IHS under license with ISO
No reproduction or networking permitted without license from IHS
Not for Resale

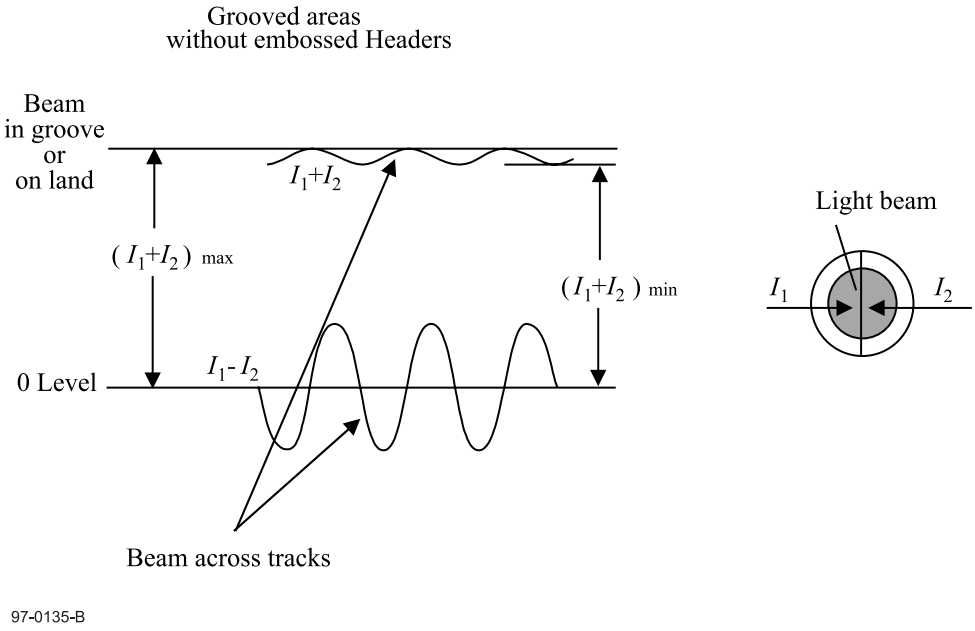

Figure 24a - Signals from grooves or on lands in the Tracking Channel

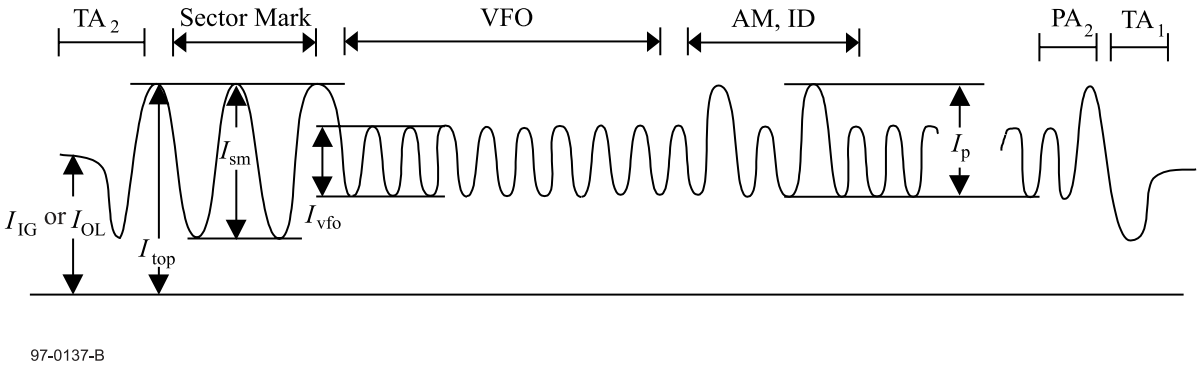

Figure 24b - Signals from Headers in Channel 1

Figure 24 - Illustration of the various parameters for read characteristics

21 Signal from grooves

The signals ($I_1 + I_2$) and ($I_1 - I_2$) shall be filtered using a 5th order Bessel filter with a cut off frequency of 1,0 MHz such that frequencies above 1,0 MHz are attenuated thereby eliminating the effect of modulation due to embossed marks.

21.1 Ratio of Groove to Land

The on-track signal is the output signal in Channel 1 when the light beam is following a groove or a land in the Rewritable data zone. The on-track signals I_{IG} and I_{OL} shall meet the following requirements:

$$0{,}85 \leq \frac{I_{IG}}{I_{OL}} \leq 1{,}15$$

21.2 Push-pull signal

The push-pull signal is the sinusoidal difference signal ($I_1 - I_2$) in the Tracking Channel, when the focus of the optical beam crosses the tracks. The signal can be used by the drive for radial tracking. The peak-to-peak value of the push-pull signal shall meet the following requirements in grooved areas in the Formatted Zone:

©ISO/IEC 2002 - All rights reserved
Copyright International Organization for Standardization
Reproduced by IHS under license with ISO
No reproduction or networking permitted without license from IHS
Not for Resale

$$0{,}70 \le \frac{(I_1 - I_2)_{pp}}{(I_1 + I_2)_{IG}} \le 1{,}40$$

where $(I_1 - I_2)_{pp}$ is the peak-to-peak amplitude of the differential output of the two halves of the split photodiode detector in the Tracking Channel, and $(I_1 + I_2)_{IG}$ is the signal measured in-groove.

21.3 Divided push-pull signal

The first term of the divided push-pull signal is the peak-to-peak amplitude derived from the instantaneous level of the differential output (I_1 - I_2) from the split photodiode detector when the light beam crosses the unrecorded fields of grooved tracks divided by the instantaneous level of the sum output (I_1 + I_2) from the split photodiode detector when the light beam crosses these areas.

The second term of the divided push-pull signal is the ratio of the minimum peak-to-peak amplitude derived from the instantaneous level of the differential output (I_1 - I_2) divided by the instantaneous level of the sum output (I_1 + I_2) from the split photodiode detector when the light beam crosses embossed headers to maximum peak-to-peak amplitude derived from the instantaneous level of the differential output (I_1 - I_2) divided by the instantaneous level of the sum output (I_1 + I_2) from the split photodiode detector when the light beam crosses these areas of grooved tracks.

The split photodiode detector separator shall be parallel to the projected track axis. In this measurement, the I_1 and I_2 signals shall be provided by the split photodiode detector. The tracking servo shall be operating in open-loop mode during this measurement.

The first term shall meet the following requirements in grooved areas:

$$0{,}70 \le \left[\left(\frac{I_1 - I_2}{I_1 + I_2}\right)\right]_{pp} \le 1{,}40$$

The second term shall satisfy the following requirements in areas containing embossed Headers:

$$\frac{\left(\frac{I_1 - I_2}{I_1 + I_2}\right)_{ppmin}}{\left(\frac{I_1 - I_2}{I_1 + I_2}\right)_{ppmax}} \ge 0{,}70$$

21.4 Track location

The Recording Tracks are located at those places on the disk where (I_1+I_2) has its maximum values. Due to the nature of Land and Groove recording, this occurs when the focussed light beam is centred on either a Land Recording Track or a Groove Recording Track.

22 Signals from Headers

The signal obtained from the embossed Headers shall be measured in Channel 1 of the Reference Drive.

22.1 Sector Mark Signals

I_{top} is the peak level of the Sector Mark and shall meet the following requirement

$$0{,}15 \le I_{top} \le 0{,}30$$

The signal I_{sm} from the Sector Mark shall meet the requirement

$$0{,}20 \le \frac{I_{sm}}{I_{top}} \le 0{,}65$$

22.2 VFO signals

The signal I_{vfo} from the marks in the VFO_1 and VFO_2 fields shall meet the requirement

$$0{,}08 \le \frac{I_{vfo}}{I_{top}} \le 0{,}25$$

©ISO/IEC 2002 - All rights reserved

Copyright International Organization for Standardization
Reproduced by IHS under license with ISO
No reproduction or networking permitted without license from IHS
Not for Resale

In addition, the condition

$$\frac{I_{\text{vfo}}}{I_{\text{pmax}}} \geq 0{,}20$$

shall be satisfied within each sector, where I_{pmax} is the signal with maximum amplitude in that sector from embossed mark signals of I_{p} defined in 22.3 and I_{vfo} is the peak-to-peak amplitude of the read signal from the VFO area.

22.3 Address Mark, ID and PA signals

The signal I_{p} from the marks in these fields shall meet the requirements

$$0{,}08 \leq \frac{I_{\text{p}}}{I_{\text{top}}} \leq 0{,}65$$

$$\frac{I_{\text{pmin}}}{I_{\text{pmax}}} \geq 0{,}20$$

The second requirement applies over any Header. I_{pmin} and I_{pmax} are the signals with minimum and maximum amplitude in those fields.

22.4 Timing jitter

The header signal shall be read and detected using the read Channel circuit defined in annex H under the conditions specified in 20.2.2. The timing jitter *Jt*(H) shall be measured according to the procedure in annex J and shall meet the following requirements:

$$Jt(\text{H}) \leq 0{,}10\ \text{T}$$

where T is the Channel clock period, *Jt*(H) is the standard deviation (sigma) of the length in time of the leading-to-leading and trailing-to-trailing edges for each *n*T period. The ideal length corresponds to n Channel bit times T. *Jt*(H) is illustrated in figure J.1.

All the time interval samples detected from the Header signals on the recording layer shall satisfy the condition of *Jt*(H).

22.5 Asymmetry

Asymmetry is the deviation between the centre levels of the signals which give maximum and minimum amplitudes I_{pmax} and I_{pmin} in Address Mark, ID and PA fields (see annex Q) and shall be in the range of 0,1 ± 0,15.

23 Signals from Control Track PEP marks

The density of tracks and the shape of marks in the PEP Zone shall be such that the cross-track loss meets the requirement

$$\frac{I_{\text{m max}}}{I_{\text{m min}}} \leq 2{,}0$$

The signal *I* is obtained from Channel 1 (see 9.1). The signal I_{m} is the maximum amplitude in a group of three successive marks. $I_{\text{m max}}$ is the maximum value and $I_{\text{m min}}$ is the minimum value of I_{m} obtained over one physical track of the PEP Zone. $I_{\text{m max}}$ shall be greater than 0,1 I_{o}, where I_{o} is the signal obtained from Channel 1 in an unrecorded ungrooved area. The effect of defects shall be ignored.

©ISO/IEC 2002 - All rights reserved
Copyright International Organization for Standardization
Reproduced by IHS under license with ISO
No reproduction or networking permitted without license from IHS
Not for Resale

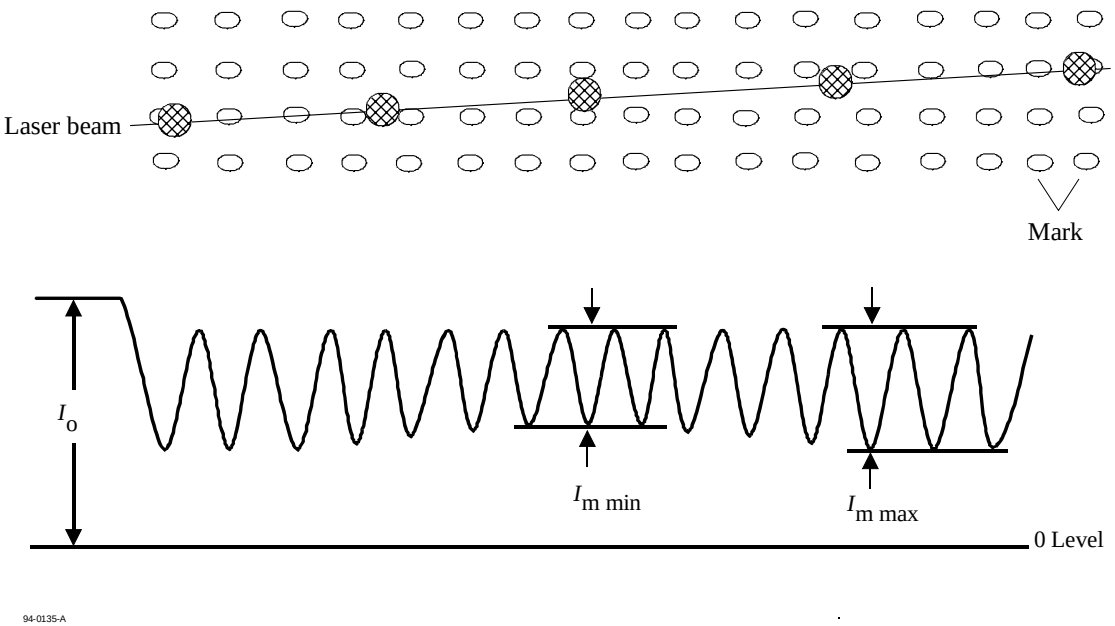

Figure 25 - Path of the laser beam when crossing tracks and the resulting PEP signals

Section 5 - Characteristics of the recording layer

24 Method of testing

Clauses 26 to 28 describe a series of tests to assess the magneto-optical properties of the Recording layer, as used for writing and erasing data. The tests shall be performed only in the Recording field of the sectors in the Rewritable Zone. The write, read and erase operations necessary for the tests shall be made on the same Reference Drive.

Clauses 26 to 28 specify only the average quality of the recording layer. Local deviations from the specified values, called defects, can cause write or erase problems. These defects are covered in section 6.

24.1 Environment

All signals in clauses 26 to 28 shall be within their specified ranges with the cartridge in any environment in the range of allowed operating environments defined in 8.1.2 except where otherwise noted.

24.2 Reference Drive

The write and erase tests described in clauses 26 to 28 shall be measured in Channel 2 of the Reference Drive. The drive shall have the following characteristics for the purpose of these tests.

24.2.1 Optics and mechanics

The focused optical beam shall have the properties defined in 9.2 a) to f). The disk shall rotate as specified in 9.5.

24.2.2 Read power

The optical power incident on the entrance surface of the disk and used for reading the information shall be in the range specified in SFP data.

24.2.2.1 Read magnetic field

The requirements for all tests must be met with a read magnetic field strength of less than 8 000 A/m.

The read magnetic fields for all tests, pointing in the south to north direction, shall be within 15° from the normal to the Disk Reference Plane P, in the direction of the incident beam, i.e. from the entrance surface to the recording layer.

24.2.3 Read Channel

The Reference Drive shall have a Read Channel which can detect magneto-optical marks in the recording layer. This Channel shall have an implementation equivalent to that given by Channel 2 in 9.3.

©ISO/IEC 2002 - All rights reserved

Copyright International Organization for Standardization
Reproduced by IHS under license with ISO
No reproduction or networking permitted without license from IHS
Not for Resale

The edge positions in time shall be measured for testing purposes by a threshold detection method. The threshold value is referenced to the centre of the peak-to-peak envelope of the readback signal. The positive peak and negative peak signals of the envelope circuit (see annex M) shall each contain a single pole filter with a -3 dB roll-off point at 50 kHz.

24.2.4 Tracking

During the measurement of the signals, the focus of the optical beam shall follow the tracks as specified in 20.2.4.

24.2.5 Signal detection for testing purposes

The signal from the Read Channel is not equalized before detection. The signal shall be rolled off with a 3-pole Butterworth filter with a cut-off frequency of half the Channel clock frequency of the band being tested. All read testing is performed at the rotational frequency of 50 Hz.

Nominally the threshold value shall be zero if the laser power calibration is perfect and there are no parameter variations. However, in some measurements the threshold value may have to be adjusted to minimize the effects of mark size changes due to parameter variations during writing.

24.3 Write conditions

24.3.1 Write pulse and power

For Types R/W and WO, marks are recorded on the disk by pulses of optical power (see annex K) at the test rotational frequency. This bias power functions as the pre-heat for following write pulses. The pulse shape for the purpose of testing will be nominally rectangular on a bias power P_b and with cooling gaps as shown in annex K with duration T_P and power P_w. T_P is the full width, half maximum duration of the light pulse. T_P shall be measured by a high speed photo detector at the output of the laser. T_P shall be 11.4 ± 0,15 ns with a 10% to 90% rise and fall time of less than 3 ns.

The measurement of laser power shall be done in pulsed operation by averaging, for example one pulse every 50 ns, using a spherical radiometer. The averaging method of measuring the laser power will minimize the accumulation of pulse width and pulse amplitude tolerances.

The value of P_w and P_e used in any media tests shall be the one measured for that particular piece of media using the method in 24.3.3. Values within 5 % of P_w and P_e that were measured by the media manufacturer when using a pulse width of T_p at radii 30 mm, 45 mm, and 62 mm on their typical media shall be recorded in the SFP zone.

2T, 4T and 8T marks shall be used in all media tests. The 2T mark shall be formed with a single T_p ns pulse that starts at the beginning of a channel clock period. The 4T and 8T marks are formed with two and four identical T_p ns pulses respectively, each starting at the beginning of a channel clock period, and spaced exactly two channel clock periods apart. All pulses shall have the same power P_w and P_e and duration T_p.

24.3.2 Write magnetic field

The requirements of all tests shall be met for all magnetic field intensities, at the recording layer during recording, in the range from 16 000 A/m to 32 000 A/m except where otherwise noted.

The write magnetic fields for all tests, pointing in the north to south direction, shall be within 15° from the normal to the Disk Reference Plane D, in the direction of the incident beam, i.e. from the entrance surface to the recording layer.

24.3.3 Pulse power determination

The following procedure shall be used by the media manufacturer to measure the value of the 4T pulse power P_w that is recorded in the SFP zone.

Erase and write several tracks and 30 mm, 45 mm and 62 mm radii of the disk under test by repeatedly writing the following test pattern:

Run Length:	2T	6T	4T	6T
Mark or Space:	M	S	M	S

The recording shall be done at a media temperature of 25°C ± 1°C, a magnetic field intensity of 16 000 A/m ± 5 % and at the test rotational frequency.

Read and detect the readback signal with the detection method given in 25.2.5. Adjust focus for maximum readback signal amplitude using the 2T mark and set the threshold at 50 % of the peak-to-peak signal amplitude for this test. Vary the focus ± 0,25 µm and check the output for best E_{th}.

Measure the average distance between edges, namely L_2, L_4 and L_6 for the 2T, 4T and 6T runs respectively, using a TIA repeated for 30 mm, 45 mm, and 62 mm radii. Averaging shall be done using 10^5 independent time interval samples on several

--`,,`,,`-`-`,,`,,`,`,,`---
©ISO/IEC 2002 - All rights reserved
Copyright International Organization for Standardization
Reproduced by IHS under license with ISO
No reproduction or networking permitted without license from IHS
Not for Resale

tracks at each radial location. Note that the 6T distribution on the TIA will in general be bimodal. The amount of bimodality depends on the thermal properties of the media. The value of L_6 is the mean of this bimodal distribution.

Adjust P_w power so that L_6 is as close to 6T as possible. Since the length of L_6 can be minimized at two points, the P_w power recorded in the SFP zone shall be at a point where the L_6 is decreasing in length as the write power is increased.

24.3.4 Media power sensitivity

The pulse power P_w is the upper bound of the power required to form 4T marks as a function of pulse duration T_p. P_w is given by the reciprocity relationship

$$P_w = C\left(\frac{1}{T_p} + \frac{1}{\sqrt{T_p}}\right) \text{mW}$$

The following formula shall be used by the media manufacturer to measure the value of the media power sensitivity C using the T_p and P_w data from 24.3.3 (see also annex K):

$$C = P_w \times \frac{T_p \times \sqrt{T_p}}{T_p + \sqrt{T_p}}$$

The value for C shall be less than 40 at 30 mm, 45 mm, and 62 mm radii for Types R/W and WO.

24.4 Erase conditions

Marks are erased from the disk by a constant optical power in the presence of a magnetic field.

24.4.1 Erase power

The erase power is the continuous optical power required for any given track at the entrance surface to erase marks written according to 24.3 to a specified level (see clause 28).

The continuous erase power level is recorded in the SFP zone for 30 mm, 45 mm, and 62 mm radii at the test rotational speed (see 17.4.2). For radii other than 30 mm, 45 mm, and 62 mm the values shall be linearly interpolated from the above.

The actual erase power shall be equal to the interpolated values ± 5 %.

The continuous erase power shall never exceed 12,5 mW.

24.4.2 Erase magnetic field

The requirements of all tests on Types R/W and WO shall be met for all magnetic field intensities at the recording layer during erasing in the range from 16 000 A/m to 32 000 A/m.

The erase magnetic field, pointing in the North to South direction, shall be within 15° from the normal to the Disk Reference Plane D, in the direction of the reflected beam, i.e. from the recording layer to the entrance surface.

24.5 Definition of signals

The signals in Channel 2 are linearly related to the difference between the currents through the photodiode detectors K_1 and K_2, and are therefore linearly related to the optical power falling on the detectors (see 9.1).

25 Magneto-optical characteristics

25.1 Figure of merit for magneto-optical signal

The figure of merit F is expressed as the product of R, sin θ and cos 2ß, where R is the reflectance expressed as a decimal fraction, θ is the Kerr rotation angle and ß is the ellipticity of the reflected beam. The polarity of the figure of merit is defined to be negative for a written mark in an Fe-rich Fe-Tb alloy layer and with the write magnetic field in the direction specified in 24.3.2. In this case the direction of Kerr rotation is counterclockwise as viewed from the source of the beam.

©ISO/IEC 2002 - All rights reserved

Copyright International Organization for Standardization
Reproduced by IHS under license with ISO
No reproduction or networking permitted without license from IHS
Not for Resale

The polarity and the value of the figure of merit shall be specified in bytes 364 and 365 of the SFP Zone (see 17.4.2). This nominal value shall be:

$$0{,}002\ 5 < |F| < 0{,}005\ 2$$

The measurement of the actual value F_m shall be made according to annex L. This actual value F_m shall be within 12% of the nominal value.

25.2 Imbalance of magneto-optical signal

The imbalance of the magneto-optical signal is the ratio of the peak-to-peak signal amplitude of the channel 2 in a sector after erased divided by the same signal written with the 2T pattern as described in 24.3.

The measurement is made in the Data field of a sector after being passed through a high pass filter of -3 dB rolloff at 1kHz and the equalizer defined in annex M.

The phase retarder in the optical system shall be in the neutral position (see 9.1). Imbalance can be caused by birefringence of the disk.

The imbalance shall not exceed 0,2 throughout the environment operating range.

The effect of headers through the filters must be removed by a technique such as gating or sample-and-hold of the signal.

26 Write characteristics

26.1 Resolution

I_L is the peak-to-peak value of the signal obtained in Channel 2 (see 9.2) from 8T marks and 8T spaces written under any of the conditions given in 24.3, the longest interval allowed by the RLL(1,7) code for each zone, and read under the conditions specified in 20.2.2 c).

I_H is the peak-to-peak value of the signal obtained in Channel 2 from 2T marks and 2T spaces written under the conditions given in 25.3, the lowest interval allowed by the RLL(1,7) code for each zone ± 0,1 MHz, and read under the condition specified in 20.2.2 c).

The resolution I_H/I_L (see figure 26) shall not be less than 0,20 within any sector. It shall not vary by more than 0,1 over a track.

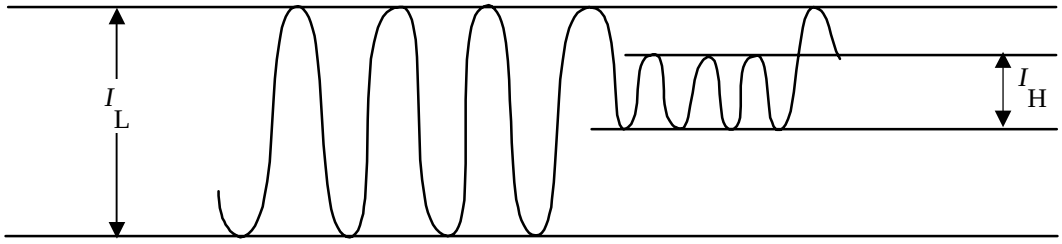

97-0128-A

Figure 26 - Definition of I_L and I_H

26.2 Narrow-band signal-to-noise ratio

The narrow-band signal-to-noise ratio is the ratio of the signal level to the noise level of a specified pattern, measured in a 30 kHz bandwidth. It shall be determined as follows.

Write a series of 2T marks followed by 2T spaces in the Recording field of a series of sectors at a frequency f_0 of the highest frequency allowed by the RLL(1,7) code for each zone ± 0,1 MHz. The write conditions shall be as specified in 24.3.

Read the Recording fields in Channel 2 with the Read Channel under the conditions specified in 24.2 using a spectrum analyzer with a bandwidth of 30 kHz. Measure the amplitudes of the signal and the noise at the frequency f_0 as indicated in figure 27. The measurements shall be corrected for the effect of the Header fields and for any instrumentation error in order to obtain the value for the Recording field only.

The narrow- band signal-to-noise ratio is

©ISO/IEC 2002 - All rights reserved
Copyright International Organization for Standardization
Reproduced by IHS under license with ISO
No reproduction or networking permitted without license from IHS
Not for Resale

$$20\log_{10}\frac{\text{signal level}}{\text{noise level}}$$

The narrow band signal-to-noise ratio shall be greater than 43 dB for all tracks in any sector in the Rewritable Zone for all allowed values of the write magnetic field and for all phase differences between -15° and +15° in the optical system as defined in 9.1.

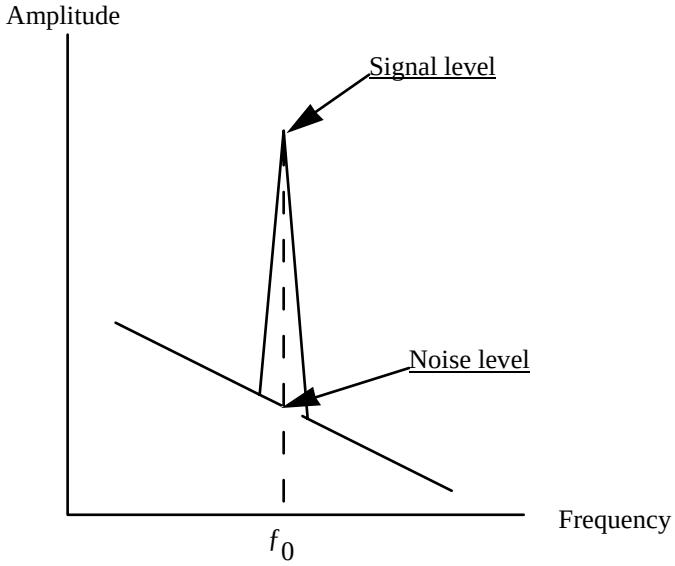

Figure 27 - Amplitude versus frequency for the magneto-optical signal

26.3 Cross-talk ratio

The cross-talk ratio definition and measurement procedure describe the entities to be measured in terms of physical tracks. These physical tracks can consist of one or more logical tracks (see 13). The number of logical tracks involved in the measurement must be adjusted for the Band in which the measurement is made.

26.3.1 Rewritable track test method

For rewritable tracks the test on cross-talk shall be carried out on any group of five adjacent unrecorded physical tracks, designated (*n*-2), (*n*-1), *n*, (*n*+1), (*n*+2), in the Rewritable Zone. Erase the recording field of each of the sectors in these tracks.

Write a series of 2T marks followed by 2T spaces at a frequency f1 for each zone ± 0,1 MHz in the Recording field of the sectors in track *n*. The write conditions shall be as specified in 24.3.

Read the Recording fields of the sectors in the tracks (*n*-1), *n* and (*n*+1) under the conditions specified in 24.2.2 and 24.2.3.

The cross-talk from a track n to track (*n*-1) and to track (*n*+1) shall be lower than -26 dB.

26.4 Timing Jitter

The timing jitter can be obtained from the TIA data in 24.3.3 with the equalizer defined in annex M. Measure the length in time of the leading-to-leading and trailing-to-trailing edges of the detected data from the 2T mark (L_2) followed by 6T space (L_6), and 6T space (L_6) followed by 2T mark (L_2) with TIA. The measurements shall be made using 10^5 independent time interval samples on several tracks at each radial location.

The value of timing jitter (due to the media) shall be less than 15 % of the time period T of one channel bit for 30 mm, 45 mm and 62 mm radii.

26.5 Media thermal interaction

The following formulas shall be used by the media manufacturer to measure the value of the media thermal interaction that is recorded in the SFP zone. The formulas use the L_2, L_4 and L_6 measurement data from 23.3.3.

First calculate the effective channel clock period T of the measurements:

©ISO/IEC 2002 - All rights reserved

Copyright International Organization for Standardization
Reproduced by IHS under license with ISO
No reproduction or networking permitted without license from IHS
Not for Resale

$$T = \frac{L_2 + L_4 + 2 \times L_6}{18}$$

This T shall be checked to make sure that it has the correct value for the band in which the recording is done.

Calculate and record the thermal interaction error E_{th} at r = 30 mm for Types R/W and WO using the following formula:

$$E_{th} \text{ or } E_{th2} = \frac{(L_4 - L_2 - 2 \times T)}{T} \times 100\% \text{ of T}$$

The value for E_{th} shall be less than 27% of the channel clock period T at r=30 mm.

27 Erase power determination

This procedure shall be used by the media manufacturer to determine the erase powers that are recorded in the SFP zone. The erase power is the continuous power level for the given radius and rotational speed that is sufficient to erase the current track without erasing the adjacent track.

For Types R/W and WO the conditions for the erase power measurement are that the media temperature is 25 °C ± 1 °C, and the magnetic field intensities at the recording layer has a value of 24 000 A/m ± 1 200 A/m at the test rotational frequency.

For Types R/W and WO erase four adjacent tracks *n*, *n*+1, *n*+2, and *n*+3 in the User Zone with a relatively high erase power. Write a 2T tone on track *n*+1 and a 4T tone on track *n*+2 under the conditions given in 24.3.1. Erase track *n*+1 with the erase power to be tested. Measure the signal amplitude on both tracks *n*+1 and *n*+2 with a spectrum analyzer.

Perform this test sequence with an initial low erase test power and increase the erase test power by 0,5 mW each time the test is repeated. Plot the track *n*+1 and track *n*+2 signal amplitudes as a function of the erase test power. Choose the erase power to be half way between the erase power where the track *n*+2 signal amplitude drops by 3 dB and the power where the track *n*+1 signal amplitude first reaches the media limited noise floor.

Section 6 - Characteristics of user data

28 Method of testing

Clauses 29 and 30 describe a series of measurements to test conformance of the user data on the disk with this International Standard. It checks the legibility of both embossed and user-written data. The data is assumed to be arbitrary. The user-written data may have been written by any drive in any environment. The read tests shall be performed on the Reference Drive.

Whereas defects are disregarded in clauses 20 to 27, they are included in clauses 29 and 30 as unavoidable deterioration of the read signals. The gravity of a defect is determined by the correctability of the ensuing errors by the Error Detection and Correction circuit in the read Channel defined below. The requirements in clauses 29 and 30 define a minimum quality of the data, necessary for data interchange.

28.1 Environment

All signals specified in clauses 29 and 30 shall be within their specified ranges with the cartridge in any environment in the range of allowed operating environments defined in 8.1.2. It is recommended that before testing the entrance surface of the optical disk shall be cleaned according to the instructions of the manufacturer of the disk.

28.2 Reference Drive

All signals specified in clauses 30 and 31 shall be measured in the indicated channels of the Reference Drive. The drive shall have the following characteristics for the purpose of these tests:

28.2.1 Optics and mechanics

The focused optical beam shall have the properties specified in 9.2 a) to f). The disk shall rotate as specified in 9.5.

28.2.2 Read power

The optical power incident on the entrance surface of the disk (used for reading the information) shall be in the range specified in 20.2.2.

©ISO/IEC 2002 - All rights reserved
Copyright International Organization for Standardization
Reproduced by IHS under license with ISO
No reproduction or networking permitted without license from IHS
Not for Resale

28.2.3 Read Channel

The read amplifiers after the photodiode detectors in Channels 1 and 2 shall be as specified in 9.3.

28.2.4 Mark Quality

The signals from both read amplifiers shall be converted from analog to binary with an edge detector as defined in annex H. The output signals from Channels 1 and 2 shall be filtered with the specified equalization and low-pass filter, and compared with their threshold levels of the comparator which shall be between 0,35 and 0,65 for the threshold fractional values. The threshold levels shall be adjusted to minimize the maximum offset (or bias) of the mark and space intervals from their desired (or true) values of 2T, 3T .... 7T, 8T. The output signals from the comparator are converted to binary signals with the edge detector. (See also annex M).

The timing jitter in this section is defined as the standard deviation of the separately measured time intervals of leading-to-leading and trailing-to-trailing edges excluding outlying observations by defects, using a time interval analyzer with the output signals from the edge detector of the marks and spaces in a sector. Therefore, independent interval samples for this measurement are limited by the number of marks and spaces in a sector. The timing jitters shall be expressed as a percentage of Channel bit time T.

The converter for Channel 1 shall operate correctly for analog signals from embossed marks with amplitudes as determined by clauses 22 and 23.

The converter for Channel 2 shall operate correctly for analog signals from user-written marks with an amplitude as determined by clauses 25 and 26.

28.2.5 Channel bit clock

The signals from the analog-to-binary converters shall be virtually locked to the Channel bit clock/clocks which provides/provide the Channel bit windows of 0,70 T effective width for timing the leading and/or trailing edges of the binary signals. Channel bit clock/clocks shall be adjusted in order to minimize the accumulated value/values of the timing errors of the leading to leading, leading to trailing, trailing to leading, and trailing to trailing edges from the Channel bit clock/clocks.

28.2.6 Binary-to-digital converters

The binary signals shall be correctly converted to the data bytes with the binary-to-digital converters based on the sector format and the recording code defined in clauses 15 and 16.

28.2.7 Error correction

Correction of errors in the data bytes shall be carried out by an error detection and correction system based on the definition in F.2 and F.3 of annex F. There shall be an additional correction system for the embossed data, based on the parity sectors as defined in 18.7.3.

28.2.8 Tracking

During measurement of the signals, the focus of the optical beam shall follow the tracks as specified in 20.2.4.

29 Minimum quality of a sector

This clause specifies the minimum quality of the Header and Recording field of a sector as required for interchange of the data contained in that sector. The quality shall be measured on the Reference Drive specified in 28.2.

A byte error occurs when one or more bits in a byte have a wrong setting, as detected by ECC and/or CRC circuits.

29.1 Headers

29.1.1 Sector Mark

At least three of the five long marks of the Sector Mark shall have the timing specified in 15.2 and the signals shall have the amplitude specified in 22.1.

29.1.2 ID fields

At least one of the two ID fields contained in Preformatted Headers 1 and 2 shall not have any byte errors as checked by the CRC in the field.

©ISO/IEC 2002 - All rights reserved

Copyright International Organization for Standardization
Reproduced by IHS under license with ISO
No reproduction or networking permitted without license from IHS
Not for Resale

29.2 User-written data

29.2.1 Recording field

If an ALPC field is recorded it shall start at 144 Channel bits ± 6 Channel bits from the end of the pre-formatted header. When the VFO_3 field is recorded, it shall start at 216 Channel bits ± 6 Channel bits from the end of the pre-formatted header.

The recording marks in a sector shall start at 216 Channel bits ±6 Channel bits from the end of the pre-formatted header and shall end at 324 Channel bits ± 84 Channel bits for 2 048-byte sectors or 516 Channel bits ± 168 Channel bits for 4 096-byte sectors from the end of the sector.

29.2.2 Byte errors

The user-written data in a sector as read in Channel 2 shall not contain any byte errors that cannot be corrected by the error correction defined in 28.2.7.

29.2.3 Asymmetry

The asymmetry of the user written marks is the deviation between the centre levels of the signal which give maximum and minimum amplitudes I_L and I_H in a sector as read in Channel 2 (see annex Q) and shall be in the range of 0,1 ± 0,15.

29.2.4 Timing jitter

The user-written marks in a sector as read in Channel 2 shall have timing jitters due to the media less than 10 % to 15 % of the time period T of one Channel bit.

30 Data interchange requirements

A disk offered for interchange of data shall comply with the following requirements (see also annex N).

30.1 Tracking

The focus of the optical beam shall not jump tracks unintentionally.

30.2 User-written data

Any sector written in the Rewritable Zone that does not comply with 30.2 shall have been replaced according to the rules of the defect management as defined in clause 19.

30.3 Quality of disk

The quality of the disk is reflected in the number of replaced sectors in the Rewritable Zone. This International Standard allows a maximum number of replaced sectors per side (see clause 19).

©ISO/IEC 2002 - All rights reserved
Copyright International Organization for Standardization
Reproduced by IHS under license with ISO
No reproduction or networking permitted without license from IHS
Not for Resale

Annex A
(normative)

Air cleanliness class 100 000

The classification of air cleanliness is based on a particle count with a maximum allowable number of specified minimum sized particles per unit volume, and on a statistical average particle size distribution.

A.1 Definition

The particle count shall not exceed a total of 3 500 000 particles per cubic metre of a size 0,5 μm and larger.

The statistical average particle size distribution is given in figure A.1. Class 100 000 means that 3 500 000 particles per cubic metre of a size of 0,5 μm and larger are allowed, but only 25 000 particles per cubic metre of a size of 5,0 μm and larger.

It shall be recognized that single sample distribution may deviate from this curve because of local or temporary conditions. Counts below 350 000 particles per cubic metre are unreliable except when a large number of a samplings is taken.

A.2 Test method

For particles of size in the range of 0,5 μm to 5,0 μm, equipment employing light-scattering principles shall be used. The air in the controlled environment is sampled at a known flow rate. Particles contained in the sampled air are passed through an illuminated sensing zone in the optical chamber of the instrument. Light scattered by individual particles is received by a photo detector which converts the light pulses into electrical current pulses. An electronic system relates the pulse height to particle size and counts the pulses such that the number of particles in relation to particle size is registered or displayed.

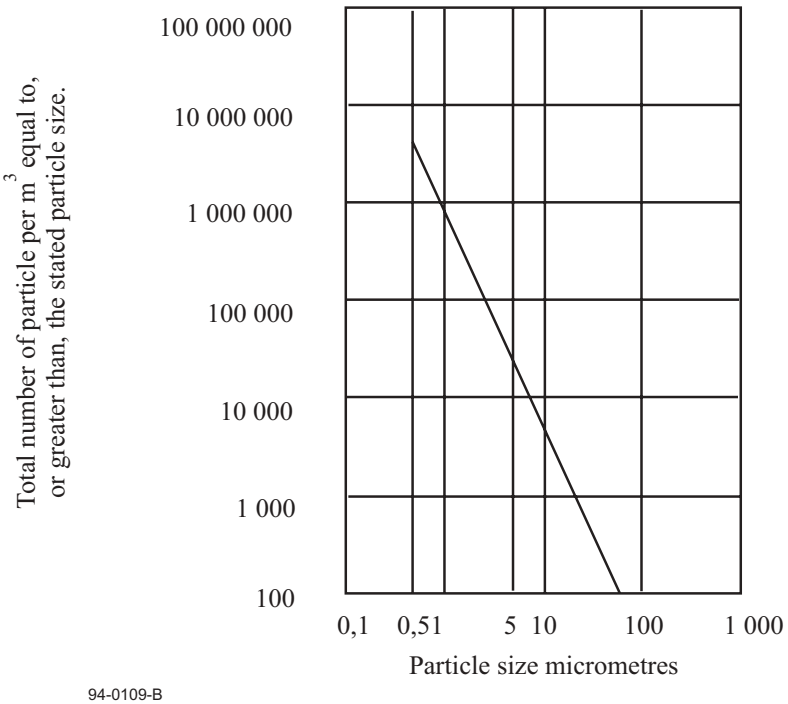

Figure A.1 - Particle size distribution curve

©ISO/IEC 2002 - All rights reserved

Copyright International Organization for Standardization
Reproduced by IHS under license with ISO
No reproduction or networking permitted without license from IHS
Not for Resale

Annex B
(normative)

Edge distortion test

B.1 The distortion test checks if the case is free from unacceptable distortion and protrusions along its edges. The test is made by causing the cartridge to pass through the vertical slot of a gauge while applying a specified force in addition to the gravitational pull.

B.2 The gauge shall be made of a suitable material, e.g. of chrome-plated carbon steel. The inner surfaces shall be polished to a surface finish of 5 μm peak-to-peak.

B.3 The dimensions shall be as follows (see figure B.1):

A = 155,0 mm

B = 136,0 mm ± 0,1 mm

C = 10,0 mm ± 0,1 mm

D = 11,40 mm ± 0,01 mm

E = 11,60 mm min.

B.4 When the cartridge is inserted vertically into the gauge, a vertical downward force F of 2,7 N maximum, applied to the centre of the top edge of the cartridge, shall cause the cartridge to pass through the gauge.

©ISO/IEC 2002 - All rights reserved
Copyright International Organization for Standardization
Reproduced by IHS under license with ISO
No reproduction or networking permitted without license from IHS
Not for Resale

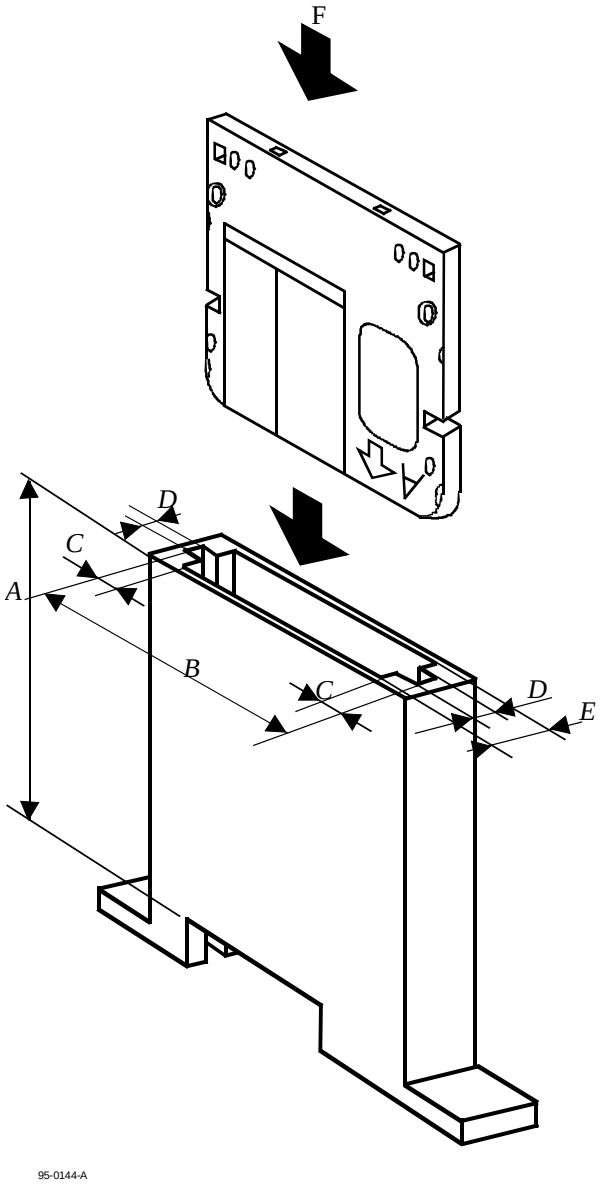

Figure B.1 - Distortion gauge

©ISO/IEC 2002 - All rights reserved

Copyright International Organization for Standardization
Reproduced by IHS under license with ISO
No reproduction or networking permitted without license from IHS
Not for Resale

Annex C
(normative)

Compliance test

C.1 The compliance test checks the flatness and flexibility of the case by forcing the four reference surfaces of the cartridge into a plane.

C.2 The location of the four reference surfaces S1, S2, S3 and S4 is defined in clause 10.5.4 and figure 5.

C.3 The test gauge consists of a base plate on which four posts P1, P2, P3 and P4 are fixed so as to correspond to the surfaces S1, S2, S3 and S4 respectively (see figure C.1). The dimensions are as follows (see figure C.2):

Posts P1 and P2

$D_a = 6{,}50 \text{ mm} \pm 0{,}01 \text{ mm}$

$D_b = 4{,}00 \text{ mm}\ {}^{+\ 0{,}00 \text{ mm}}_{-\ 0{,}02 \text{ mm}}$

$H_a = 1{,}0 \text{ mm} \pm 0{,}1 \text{ mm}$

$H_b = 2{,}0 \text{ mm max.}$

Posts P3 and P4

$D_c = 5{,}50 \text{ mm} \pm 0{,}01 \text{ mm}$

After assembly, the upper annular surfaces of the four posts shall lie between two horizontal planes spaced 0,01 mm apart.

C.4 The cartridge shall be placed with its reference surfaces onto the posts of the horizontal gauge. A vertical down force F of 0,4N shall be exerted on the cartridge opposite each of the four posts.

C.5 Requirements

Under the conditions of C.4, any three of the four surfaces S1 to S4 shall be in contact with the annular surface of respective posts. Any gap between the remaining surface S and the annular surface of its post shall not exceed 0,1 mm.

©ISO/IEC 2002 - All rights reserved
Copyright International Organization for Standardization
Reproduced by IHS under license with ISO
No reproduction or networking permitted without license from IHS
Not for Resale

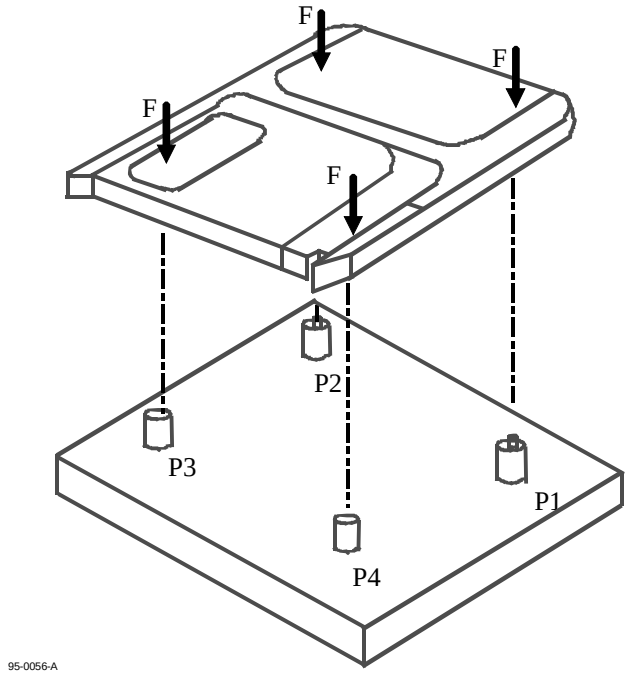

Figure C.1 - Compliance gauge

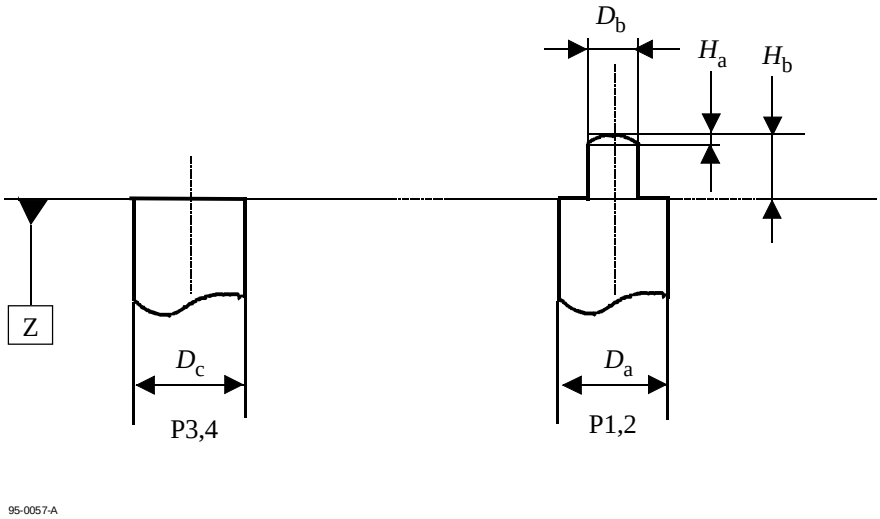

Figure C.2 - Detail of posts

©ISO/IEC 2002 - All rights reserved

Copyright International Organization for Standardization
Reproduced by IHS under license with ISO
No reproduction or networking permitted without license from IHS
Not for Resale

Annex D
(normative)

Test method for measuring the adsorbent force of the hub

D.1 The purpose of this test is to determine the magnetic characteristic of the magnetizable material of the hub.

D.2 Dimensions

The test device (see figure D.1) consists of a spacer, a magnet, a back yoke and a centre shaft. The dimensions of test device are as follows:

D_d = 8,0 mm ± 0,1 mm

D_e = 20,0 mm ± 0,1 mm

D_f = 19,0 mm max.

D_g = $3{,}9\ \text{mm}\ ^{+\ 0{,}0\ \text{mm}}_{-\ 0{,}1\ \text{mm}}$

H_c = 0,40 mm ± 0,01 mm

H_d = 1,2 mm (typical, to be adjusted to meet the force requirement of D.4)

D.3 Material

The material of the test device shall be :

Magnet : Any magnetizable material, typically Sm-Co
Back yoke : Any suitable magnetizable material
Spacer : Non-magnetizable material or air gap
Centre shaft : Non-magnetizable material

D.4 Characteristics of the magnet with back yoke

Number of poles : 4 (typical)
Maximum energy product (BH_{max}) : 175 kJ/m^3 ± 16 kJ/m^3

The characteristics of the magnet with back yoke shall be adjusted so that with a pure nickel plate of the following dimensions (see figure D.2), and the adsorbent force of this plate at the point of H_c = 0,4 mm when spaced from the magnet surface shall be 9,5 N ± 0,6 N.

D_h = 7,0 mm ± 0,1 mm
D_j = 22,0 mm ± 0,1 mm
H_e = 2,0 mm ± 0,05 mm

D.5 Test condition for temperature

These conditions shall be as specified in 8.1.1.

©ISO/IEC 2002 - All rights reserved
Copyright International Organization for Standardization
Reproduced by IHS under license with ISO
No reproduction or networking permitted without license from IHS
Not for Resale

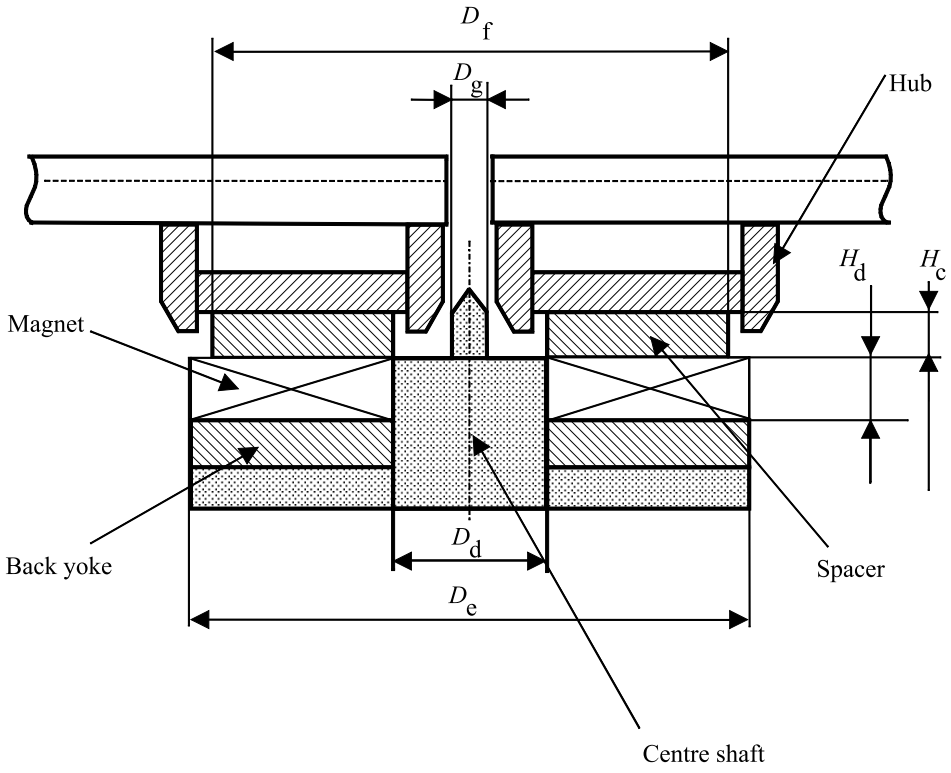

Figure D.1 - Test device for the clamping characteristic of the hub

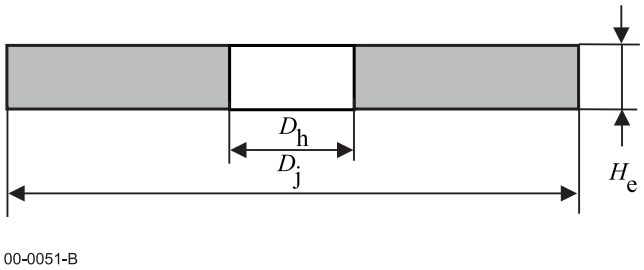

Figure D.2 - Calibration plate of the test device

©ISO/IEC 2002 - All rights reserved

Copyright International Organization for Standardization
Reproduced by IHS under license with ISO
No reproduction or networking permitted without license from IHS
Not for Resale

Annex E
(normative)

CRC for ID fields

The sixteen bits of the CRC shall be computed over the first three bytes of the ID field. The generator polynomial shall be

$$G(x) = x^{16} + x^{12} + x^5 + 1$$

The residual polynomial shall be

$$R(x) = \left(\sum_{i=8}^{i=23} \overline{a}_i x^i + \sum_{i=0}^{i=7} a_i x^i \right) x^{16} \mod G(x)$$

and a_i denotes a bit of the first three bytes and $\overline{a_i}$ an inverted bit. The highest order bit of the first byte is a_{23}.

The sixteen bits c_k of the CRC are defined by

$$R(x) = \sum_{k=0}^{k=15} c_k x^k$$

where c_{15} is recorded as the highest order bit of the fourth byte in the ID field.

©ISO/IEC 2002 - All rights reserved
Copyright International Organization for Standardization
Reproduced by IHS under license with ISO
No reproduction or networking permitted without license from IHS
Not for Resale

Annex F
(normative)

Interleave, CRC, ECC, Resync for the data field

F.1 Interleave

F.1.1 Interleave for 4 096-byte sectors.

The different bytes shall be designated as follows.

D_n are user data bytes
SWF_m are SWF bytes (see 15.12.3)
C_k are CRC check bytes
$E_{s,t}$ are ECC check bytes

These bytes shall be ordered in a sequence A_n in the order in which they shall be recorded on the disk. The order of n of D_n is the same as that in which they are input from the interface. Depending on the value of n, these elements are:

for $1 \le n \le 4\,096$: $A_n = D_n$

for $4\,097 \le n \le 4\,104$: $A_n = SWF_m$

for $4\,105 \le n \le 4\,116$: $A_n = (FF)$

for $4\,117 \le n \le 4\,120$: $A_n = C_k$

for $4\,121 \le n \le 4\,760$: $A_n = E_{s,t}$

where:

$m = n - 4\,096$

$k = n - 4\,116$

$s = [(n - 4\,121) \bmod 40] + 1$

$$t = \text{int}\left[\frac{n - 4\,121}{40}\right] + 1$$

The notation int[x] denotes the largest integer not greater than x.

The first three parts of A_n are 40-way interleaved by mapping them onto a two-dimensional matrix B_{ij} with 103 rows and 40 columns. Thus

for $1 \le n \le 4\,120$: $B_{ij} = A_n$

where:

$i = 102 - \text{int}[(n-1)/40]$

$j = (n - 1) \bmod 40$

F.1.2 Interleave for 2 048-byte sectors

The different bytes shall be designated as follows.

D_n are user data bytes

SWF_m are SWF bytes (see 15.12.3)

C_k are CRC check bytes

$E_{s,t}$ are ECC check bytes

©ISO/IEC 2002 - All rights reserved

Copyright International Organization for Standardization
Reproduced by IHS under license with ISO
No reproduction or networking permitted without license from IHS
Not for Resale

These bytes shall be ordered in a sequence A_n in the order in which they shall be recorded on the disk. The order of n of D_n is the same as that in which they are input from the interface. Depending on the value of n, these elements are:

for $1 \le n \le 2\,048$: $A_n = D_n$

for $2\,049 \le n \le 2\,056$: $A_n = SWF_m$

for $2\,057 \le n \le 2\,060$: $A_n = C_k$

for $2\,061 \le n \le 2\,380$: $A_n = E_{s,t}$

where:

$$m = n - 2\,048$$
$$k = n - 2\,056$$
$$s = [(n - 2\,061) \bmod 20] + 1$$
$$t = \text{int}\left[\frac{n - 2\,061}{20}\right] + 1$$

The notation int[x] denotes the largest integer not greater than x.

The first three parts of A_n are 20-way interleaved by mapping them onto a two-dimensional matrix B_{ij} with 103 rows and 20 columns. Thus

for $1 \le n \le 2\,060$: $B_{ij} = A_n$

where:

$i = 102 - \text{int}[(n-1)/20]$

$j = (n - 1) \bmod 20$

F.2 CRC

F.2.1 General

The CRC and the ECC shall be computed over the Galois field based on the primitive polynomial

$$G_p(x) = x^8 + x^5 + x^3 + x^2 + 1$$

The generator polynomial for the CRC bytes shall be

$$G_C(x) = \prod_{i=136}^{i=139} (x + \alpha^i)$$

where the element $\alpha^i = (ß^i)^{88}$, with ß being a primitive root of $G_p(x)$. The value of the n-th bit in a byte is the coefficient of the n-th power of ß, where $0 \le n \le 7$, when ß is expressed on a polynomial basis.

The contents of the four check bytes C_k of the CRC are defined by the residual polynomial

$$R_C(x) = I_C(x)x^4 \bmod G_C(x)$$

$$R_C(x) = \sum_{k=1}^{k=4} C_k x^{4-k}$$

The last equation specifies the storage locations for the coefficients of the polynomial.

F.2.1.1 CRC for 4 096-byte sectors

The four check bytes of the CRC shall be computed over the user data and the SWF bytes as specified in F.2.1.

The information polynomial shall be

©ISO/IEC 2002 - All rights reserved
Copyright International Organization for Standardization
Reproduced by IHS under license with ISO
No reproduction or networking permitted without license from IHS
Not for Resale

$$I_C(x) = \left[\sum_{i=1}^{i=102} \left(\sum_{j=0}^{j=39} (B_{i,j}) x^i \right) \right] + \sum_{j=0}^{j=35} (B_{0,j})$$

F.2.2 CRC for 2 048-byte sectors

The four check bytes of the CRC shall be computed over the user data and the SWF bytes as specified in F.2.1.

The information polynomial shall be

$$I_C(x) = \left[\sum_{i=1}^{i=102} \left(\sum_{j=0}^{j=19} (B_{i,j}) x^i \right) \right] + \sum_{j=0}^{j=15} (B_{0,j})$$

F.3 ECC

The primitive polynomial $G_p(x)$ and the elements α^i and ß shall be as specified in F.2.1. The generator polynomial for the check bytes of the ECC shall be

$$G_E(x) = \prod_{i=120}^{i=135} (x + \alpha^i)$$

This polynomial is self-reciprocal. This property can be used to reduce the hardware size. The initial setting of the ECC register shall be all ZEROs. The bits of the computed check bytes shall be inverted before they are encoded into Channel bits.

F.3.1 ECC for 4 096-byte sectors

The 640 check bytes of the ECC shall be computed over the user bytes, the SWF bytes and the CRC bytes. The corresponding 10 information polynomials shall be:

$$I_{E_j}(x) = \sum_{i=0}^{i=102} (B_{i,j}) x^i$$

where $0 \le j \le 39$.

The contents of the 16 check bytes $E_{s,t}$ for each polynomial $I_{E_j}(x)$ are defined by the residual polynomial

$$R_{E_j}(x) = I_{E_j}(x) x^{16} \mod G_E(x)$$

$$R_{E_j}(x) = \sum_{t=1}^{t=16} E_{j+1,t} x^{16-t}$$

The last equation specifies the storage locations for the coefficients of the polynomials.

F.3.2 ECC for 2 048-byte sectors

The 320 check bytes of the ECC shall be computed over the user bytes, the SWF bytes and the CRC bytes. The corresponding 10 information polynomials shall be:

$$I_{E_j}(x) = \sum_{i=0}^{i=102} (B_{i,j}) x^i$$

where $0 \le j \le 19$.

©ISO/IEC 2002 - All rights reserved

Copyright International Organization for Standardization
Reproduced by IHS under license with ISO
No reproduction or networking permitted without license from IHS
Not for Resale

The contents of the 16 check bytes $E_{s,t}$ for each polynomial $I_{E_j}(x)$ are defined by the residual polynomial

$$R_{E_j}(x) = I_{E_j}(x)x^{16} \mod G_E(x)$$

$$R_{E_j}(x) = \sum_{t=1}^{t=16} E_{j+1,t}\, x^{16-t}$$

The last equation specifies the storage locations for the coefficients of the polynomials.

F.4 Resync

The Resync fields (see annex G) shall be inserted in the Data field to prevent loss of synchronization and to limit the propagation of errors in the user data. They are numbered consecutively and shall contain one of the following pattern of Channel bits.

0X0 100 000 001 000 000 100 00Y

0X0 100 000 001 000 000 101 00Y

Where X and Y are set to ZERO or ONE based on the preceding or following data patterns.

For 4 096-byte sectors, a field RSn shall be inserted between bytes A_{80n} and A_{80n+1},

where $1 \le n \le 59$.

For 2 048-byte sectors, a field RSn shall be inserted between bytes A_{40n} and A_{40n+1},

where $1 \le n \le 59$.

F.5 Recording sequence for the Data field

The elements of the Data field shall be recorded on the disk according to sequence A_n immediately following the Sync bytes and with the Resync bytes inserted as specified in F.4.

Figures F.1, F.2 and F.3 show in matrix form the arrangement of these elements. The sequence of recording is from top-to-bottom and left-to-right.

SB designates a Sync byte
D designates a user byte
RS designates a Resync byte
P designates a SWF byte
C designates a check byte for CRC
E designates a check byte for ECC
(FF) designates a (FF) byte

For 4 096-byte sectors (figure F.x) the first 103 rows contain in columns 0 to 39 the user bytes, the SWF bytes and the CRC check bytes. The next 16 rows contain only the ECC check bytes.

For 2 048-byte sectors (figure F.1) the first 103 rows contain in columns 0 to 19 the user bytes, the SWF bytes and the CRC check bytes. The next 16 rows contain only the ECC check bytes.

©ISO/IEC 2002 - All rights reserved
Copyright International Organization for Standardization
Reproduced by IHS under license with ISO
No reproduction or networking permitted without license from IHS
Not for Resale

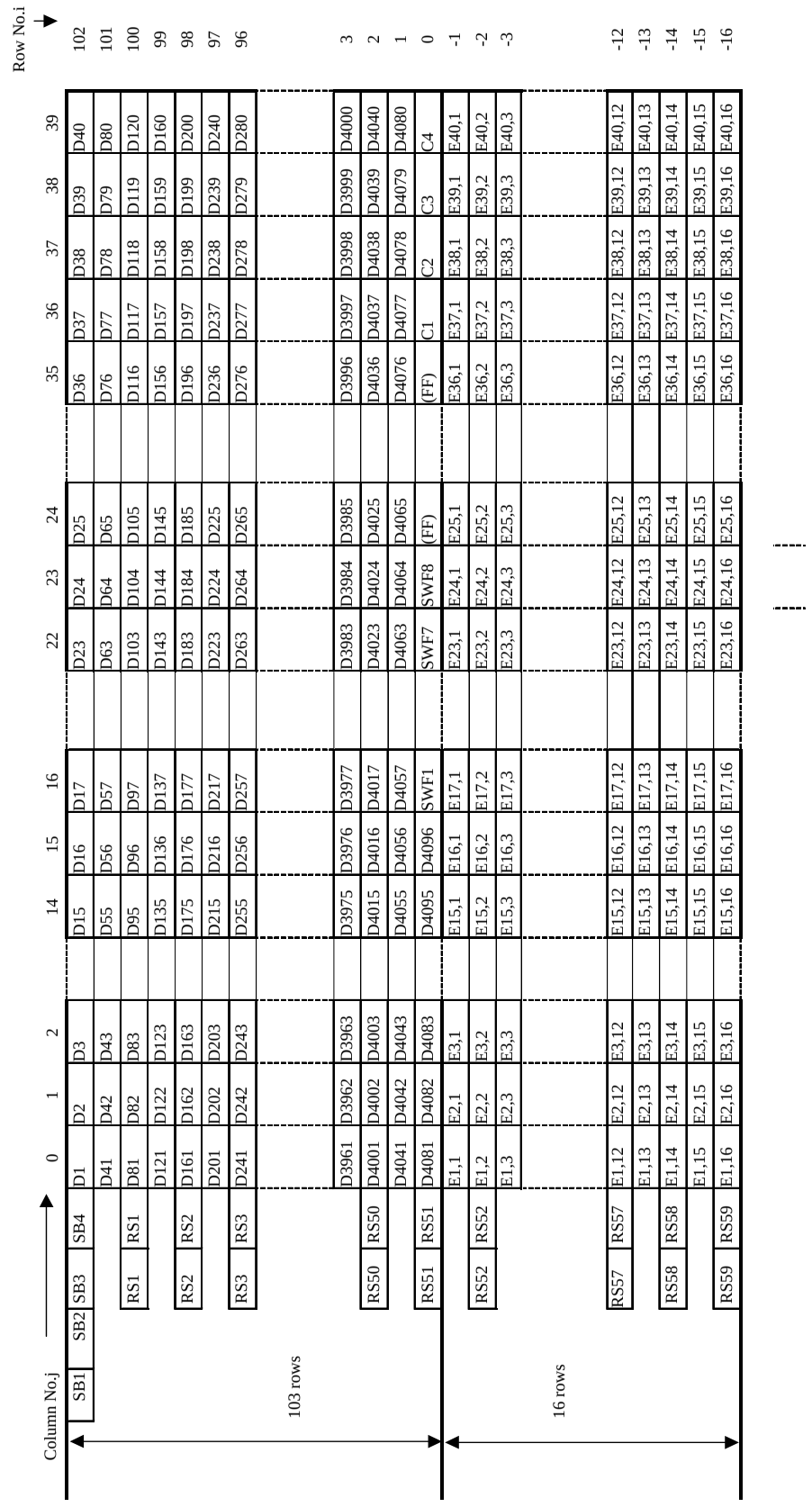

Figure F.1 - Data Configuration, 4 096-byte sectors, ECC with interleave

©ISO/IEC 2002 - All rights reserved
Copyright International Organization for Standardization
Reproduced by IHS under license with ISO
No reproduction or networking permitted without license from IHS
Not for Resale

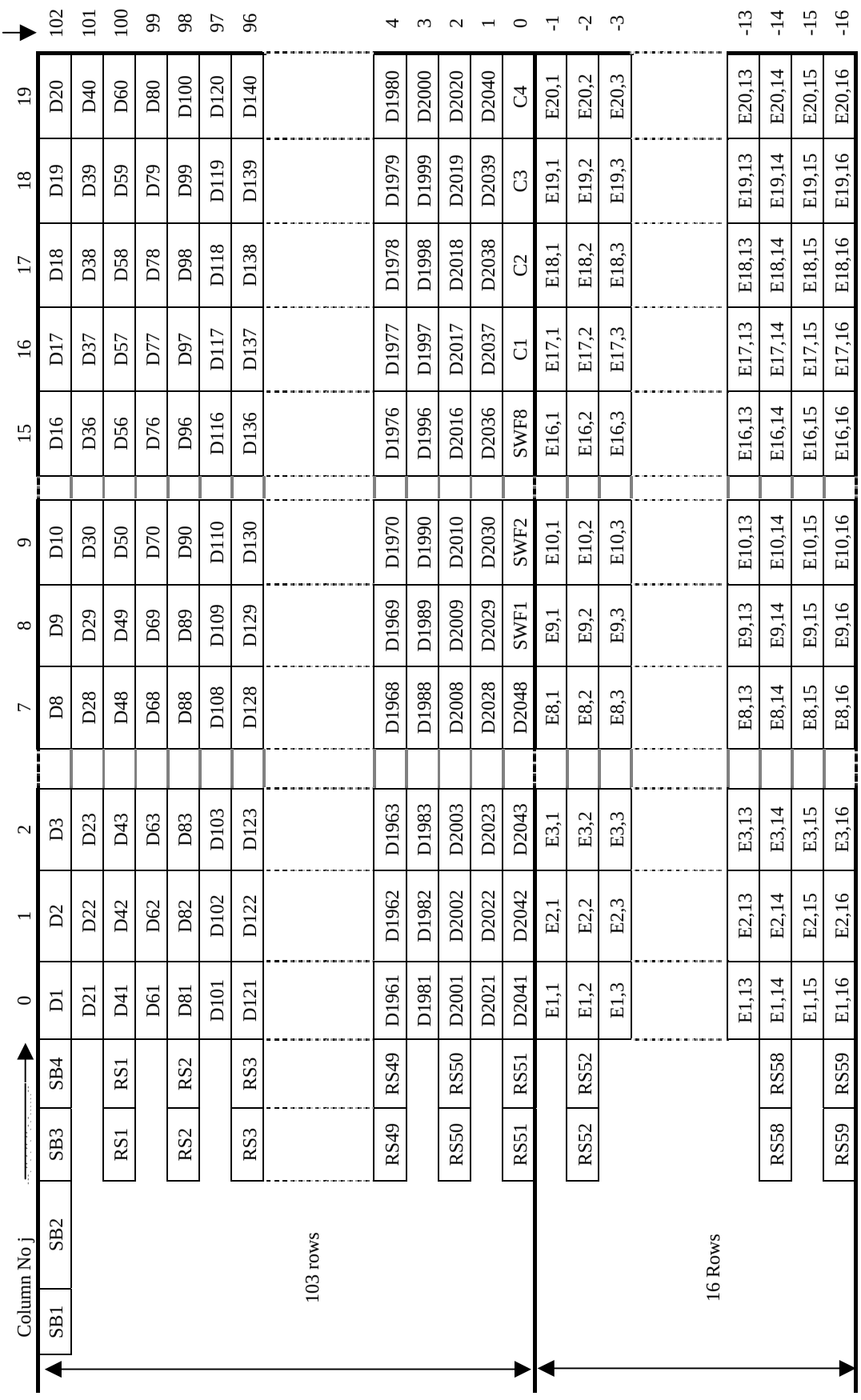

Figure F.2 – Data configuration, 2 048-byte sectors, ECC with interleave

©ISO/IEC 2002 - All rights reserved
Copyright International Organization for Standardization
Reproduced by IHS under license with ISO
No reproduction or networking permitted without license from IHS
Not for Resale

Annex G
(normative)

Determination of Resync pattern

DSV (Digital Sum Value) is used in the descriptions that follow. Other acronyms include PLL (Phase Lock Loop), PPM (Pulse Position Modulation) and PWM (Pulse Width Modulation).

G.1 Conditions of Resync pattern

The Resync pattern shall have the following characteristics to satisfy its required function:

1) The Resync pattern is an irregular Channel bit pattern of seven consecutive ZERO bits and a ONE bit followed by six consecutive ZERO bits that does not occur in the (1,7) modulation code.
2) The irregularity of Resync pattern is detectable using either only leading edges or only trailing edges when dual PLL is used.
3) The number of ONEs in Resync pattern is switchable from an odd number to an even number or vice versa for minimizing the d.c. level fluctuation of the data pattern in the Data field of a sector.
4) The length of the Resync pattern shall be 24 Channel bits.

G.2 Resync pattern

Selection of one of the two Resync patterns shown below shall be made in order to minimize the d.c. level fluctuation.

The selection criteria are described in G.5.

	Data 1	Resync area	Data 2
		Resync pattern	
Resync 1	0x0	100000001000000100	00y
Resync 2	0x0	100000001000000101	00y

where x = ZERO or ONE

y = ZERO or ONE

©ISO/IEC 2002 - All rights reserved

Copyright International Organization for Standardization
Reproduced by IHS under license with ISO
No reproduction or networking permitted without license from IHS
Not for Resale

G.3 Generation algorithm of resync pattern

PREVIOUS Data 1		Resync Area								NEXT Data 2
Data bits	Channel bits	00	assumed data bits						01	Data bits
X1 X2		0x0	Resync Pattern					z	00y	X3 X4
00	0 001	010	100	000	001	000	000	100	001	0x
								0	000	1x
								1	001	0x
								1	000	1x
00	1 001	010	100	000	001	000	000	100	001	0x
								0	000	1x
								1	001	0x
								1	000	1x
01	0 001	010	100	000	001	000	000	100	001	0x
								0	000	1x
								1	001	0x
								1	000	1x
01	1 010	000	100	000	001	000	000	100	001	0x
								0	000	1x
								1	001	0x
								1	000	1x
10	0 101	010	100	000	001	000	000	100	001	0x
								0	000	1x
								1	001	0x
								1	000	1x
10	1 - - -		does not occur							
11	0 010	000	100	000	001	000	000	100	001	0x
								0	000	1x
								1	001	0x
								1	000	1x
11	1 - - -		does not occur							

where z = ZERO for Resync 1
z = ONE for Resync 2

NOTE 1 - x_1 and x_2 are encoded assuming the following information bits are ZERO ZERO

NOTE 2 - The values of these information bits are the assumed value for encoding.

NOTE 3 - This Channel bit was inverted after encoding in order to generate the irregular pattern

NOTE 4 - The value of the last three bits of the Resync area is determined by:

1) the previous Channel bit assumed to be ZERO
2) the two information bits (assumed to be ZERO ONE);
3) the state of Data 2 information bit X_3 per the (1,7) encode table 3.

G.4 Minimization of d.c. level

The criteria for selecting either Resync pattern 1 or Resync pattern 2 in order to minimize the d.c. level fluctuation is based on the Channel bits of the Data area, and 0x0, 00y in the Resync area.

©ISO/IEC 2002 - All rights reserved
Copyright International Organization for Standardization
Reproduced by IHS under license with ISO
No reproduction or networking permitted without license from IHS
Not for Resale

Data	Resync area	Data
Data Block 0x0	Resync pattern: 100000001000000100 (Resync pattern 1) / 100000001000000101 (Resync Pattern 2)	00y Data Block

where x = ZERO or ONE
y = ZERO or ONE

The decision is made to select either Resync pattern 1 or Resync pattern 2 according to the procedure described in G.5.

G.5 Determination of Resync pattern

The Resync pattern to be used shall be determined by the following procedure.

1) Convert the Channel bits described in PPM data into PWM data in order to simplify handling.

   For example, if the PPM data is

   ... 0010100010010 ...

   the PWM data shall be

   ... 0011000011100 ...

   The DSV calculation shall be defined in terms of PWM data such that ZERO = -1 and ONE = +1. (see Example below)

Example of calculation of Block DSV_m and Resync DSV_m

(1,7) channel bit (PPM data): 0 1 0 0 0 0 1 0 0 0 1 0 0 0 0 0 0 0 1 0 0 0 0

PWM data: 0 1 1 1 1 1 0 0 0 0 1 1 1 1 1 1 1 1 0 0 0 0 0

Written marks on the disk

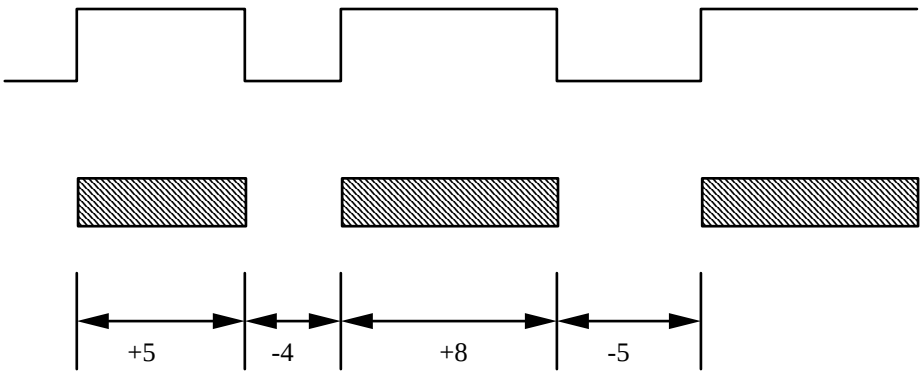

DSV_m is calculated as:

$DSV_m = (+5 - 4 + 8 - 5 \ldots)$

2) The Resync area shall be divided into two parts (RS || INV), where both parts are concatenated as follows:

   RS = 0x010000000100000010 in PPM data
   INV = 000y(INV1) or 100y(INV2) in PPM data .

©ISO/IEC 2002 - All rights reserved

Copyright International Organization for Standardization
Reproduced by IHS under license with ISO
No reproduction or networking permitted without license from IHS
Not for Resale

3) The user data field shall be concatenated as

VFO_3 || SYNC || B_0 || RS_1 || INV1 (or INV2) || B_1 || RS_2 || ...

... || INV1 (or INV2) || B_m || RS_{m+1} || ... ... || INV1 (or INV2) || B_N

where

m = 1 to N

N = 59 in both 4 096-byte and 2 048-byte sectors,
(See figure G.1)

4) The DSV(z) function shall be defined such that the argument (z), which is a PPM data stream, shall result in the PWM DSV sum based on the last PWM state of the PWM data preceding the data in the (z) argument.

5) INV1 or INV2 shall be selected in step m using the following algorithm:

$P_0 = DSV(VFO_3 || SYNC || B_0 || RS_1)$
$P_m = P_{m-1} + DSV(INV1 || B_m || RS_{m+1})$ or
$P_m = P_{m-1} + DSV(INV2 || B_m || RS)$

Select INV1 or INV2 to minimize $|P_m|$.

$P_N = P_{N-1} + DSV(INV1 || B_N)$ or
$P_N = P_{N-1} + DSV(INV2 || B_N)$

Select INV1 or INV2 to minimize $|P_N|$.

This procedure shall be repeated from m = 1 to N, where N = 59 in both 4 096-byte and 2 048-byte sectors. If $|P_m|$ is the same for Resync pattern 1 and Resync pattern 2, Resync pattern 1 shall be selected.

©ISO/IEC 2002 - All rights reserved
Copyright International Organization for Standardization
Reproduced by IHS under license with ISO
No reproduction or networking permitted without license from IHS
Not for Resale

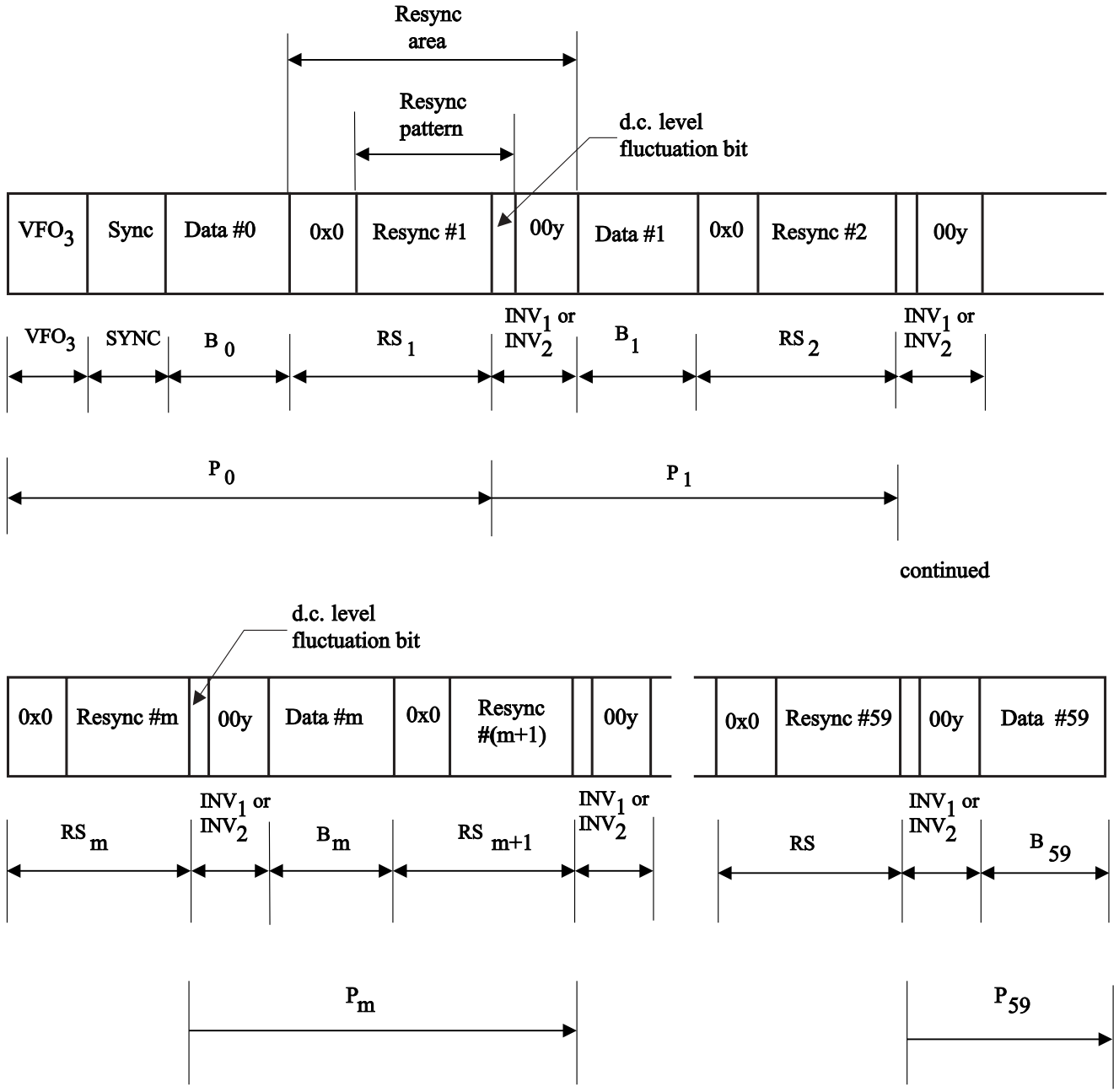

Note: The above figure is for both 4 096-byte and 2 048-byte sectors.
Note: Each P0, P1,...P39 represents the total DSV from VFO_3.

00-0073-A

Figure G.1 - Example of Resync byte

©ISO/IEC 2002 - All rights reserved

Copyright International Organization for Standardization
Reproduced by IHS under license with ISO
No reproduction or networking permitted without license from IHS
Not for Resale

Annex H
(normative)

Read Channel for measuring jitter

Jitter shall be measured by using the following read Channel.

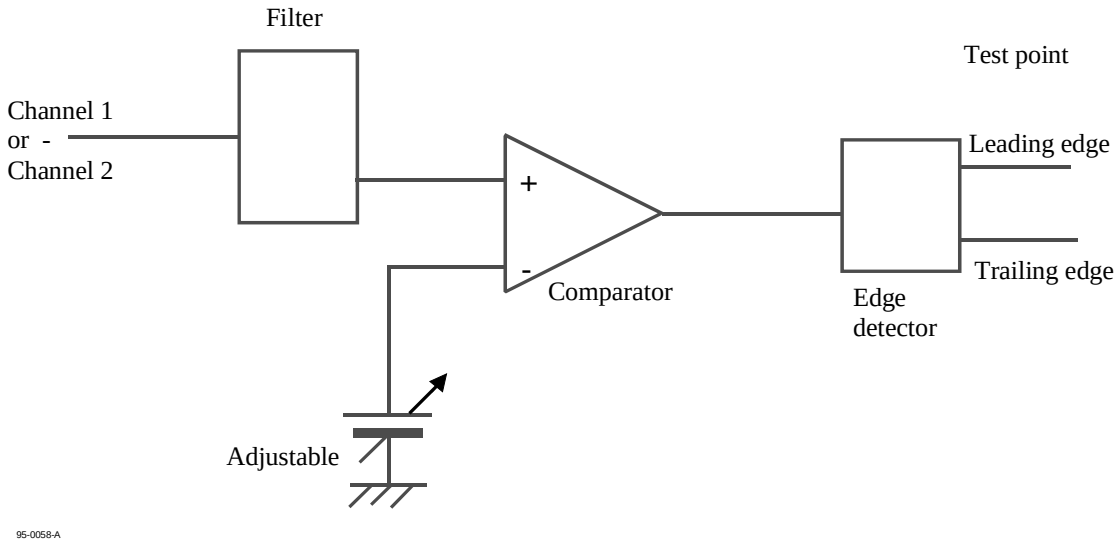

Input signal:

Channel 1, for embossed marks
Channel 2, for user written marks

Filter specifications:

1) Equalizer: See annex M.
2) Filter type: 5th Bessel function
3) Low pass filter: Cut-off frequency = one half the channel clock frequency of the band being tested

©ISO/IEC 2002 - All rights reserved
Copyright International Organization for Standardization
Reproduced by IHS under license with ISO
No reproduction or networking permitted without license from IHS
Not for Resale

Annex J
(normative)

Timing jitter measuring procedure

The timing jitter of leading-to-leading or trailing-to-trailing edges shall be measured using the following procedures.

1) Set the threshold level of the detector circuit such that the 2T mark and 2T space of the VFO is exactly 2 Channel bit times T long.
2) Hold the threshold level, and detect the signal edges.
3) Measure the lengths in time of the leading-to-leading and trailing-to-trailing edges using a Time Interval Analyzer.
4) Acquire 10^5 independent time interval samples excluding the data from defective areas.
5) Calculate the standard deviation *Jt* of the timing jitter distribution; the difference between the measured length of leading-to-leading or trailing-to-trailing edges and the mean value of corresponding mark or space length L_n shall be taken as samples.

where *Jt* is shown in figure J.1.

The lengths leading-to-leading or trailing-to-trailing edges shall be separately examined, and the specifications should be satisfied even in the worst case.

In case of header signal evaluation, the threshold level shall be set using VFO_1 and the time interval samples shall be measured using the AM to PA fields.

In case of embossed data signal evaluation, the threshold level shall be set using VFO_3 and the time interval samples shall be measured using the Sync and Data field in the user data area, including all time interval samples from user data SWF, CRC, ECC, and Resync.

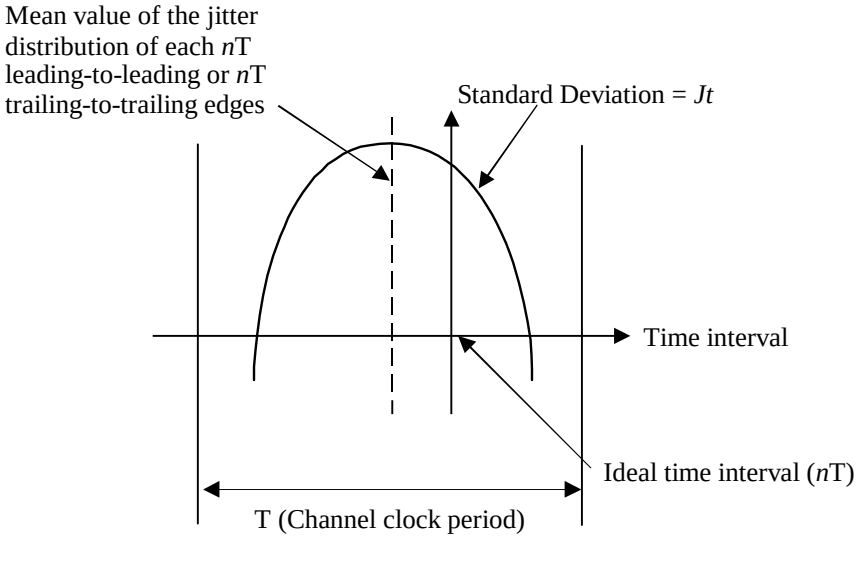

Figure J.1 - Measured distribution of timing jitter

©ISO/IEC 2002 - All rights reserved

Copyright International Organization for Standardization
Reproduced by IHS under license with ISO
No reproduction or networking permitted without license from IHS
Not for Resale

Annex K
(normative)

Definition of write pulse shape

The rise and fall times, T_r and T_f, shall each be as specified in 24.3.1 for any write pulse width T_p. The definition of the write pulse shapes for Types R/W and WO is shown in the following figure:

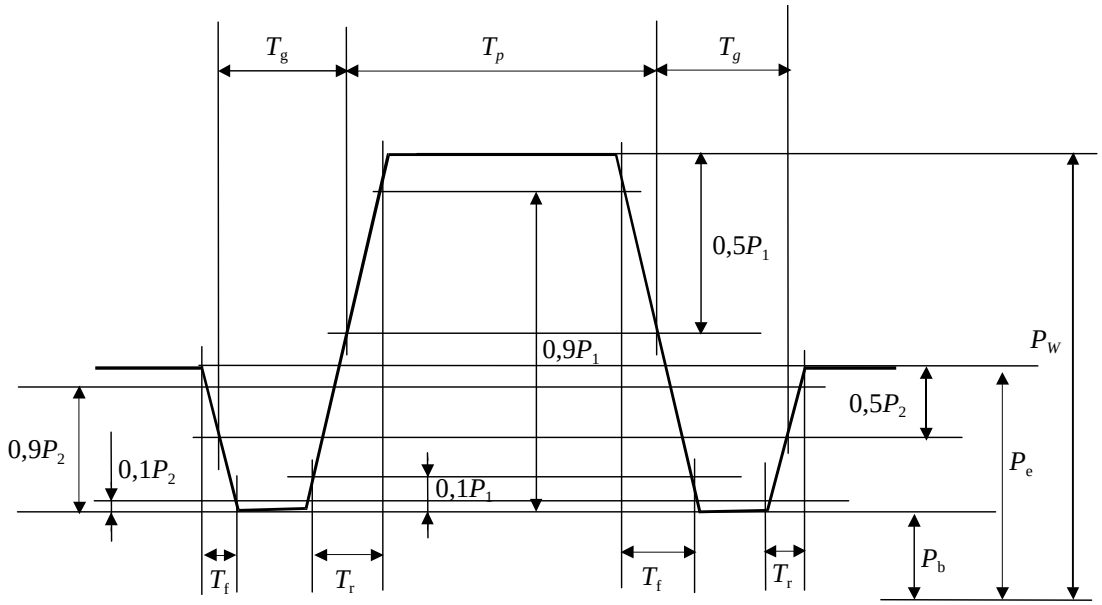

P_w : Write power
P_b : Bias power
P_e : Pre-Heat power
T_f : Fall time
T_r : Rise time
P_1 : P_w - P_b
T_p : Write pulse width
P_2 : P_e - P_b
T_g : Cooling gap width - 0,5T

Figure K.1 - Shape of write pulse for testing Types R/W and WO

©ISO/IEC 2002 - All rights reserved
Copyright International Organization for Standardization
Reproduced by IHS under license with ISO
No reproduction or networking permitted without license from IHS
Not for Resale

Annex L
(normative)

Measurement of figure of merit

L.1 The figure of merit is, in practice, equal to the amplitude of the read signal from a recording at low frequency (in two dimensions). The written domains shall be substantially larger than the focal spot, so as to work in the low frequency region where the modulation transfer function of the optical system is one.

This implies that for a preformatted disk, rotating at 50 Hz, a signal with a frequency between 10 kHz and 100 kHz has to be written on several consecutive tracks and in between those tracks maintaining a fixed phase relationship between successive write passes. The disk shall be read with the read power specified in byte 21 of the SFP Zone (see 17.4.2).

Determination of the figure of merit using an optical system as shown in figure 1 and with characteristics as specified in 9,1 will not measure media properties only but also the optical retardation of the optical system. Therefore a calibration of the optical system is needed with a conventional determination of the figure of merit by measuring the reflectance, Kerr rotation and ellipticity. This calibration can only be executed reliably on media with low coercivity.

L.2 The optical test head shall be calibrated as follows. A test disk with negligible birefringence (glass) and low coercivity magneto-optical layer is used for conventional determination of reflectance R, Kerr rotation θ and ellipticity ß. The product $F_L = R.\sin\theta \,.\, \cos 2ß$ is determined. On the same disk a test pattern as described above is written and read back with the optical head resulting in signal amplitude V_L. Any other disk (high or low coercivity) can now be measured with the optical head using a similar test pattern, resulting in a signal amplitude V. The figure of merit F_m of this disk shall be

$$F_m = \frac{F_L \, V}{V_L}$$

©ISO/IEC 2002 - All rights reserved

Copyright International Organization for Standardization
Reproduced by IHS under license with ISO
No reproduction or networking permitted without license from IHS
Not for Resale

Annex M
(normative)

Implementation Independent Mark Quality Determination (IIMQD) for the interchange of recorded media

M.1 Test patterns

The IIMQD offset test uses two special patterns consisting of seven marks and seven spaces each, one mark and one space of each run length from 2T to 8T, to test the drive's ability to form marks of the proper length for the purposes of media interchange.

The following procedure shall be used to determine IIMQD for the interchange of recorded media.

Erase the tracks and write one of the following test patterns as a group many times on several tracks at the 30 mm, 45 mm, and 62 mm radii using the laser power write method of the drive under test. A separate test shall be done for each pattern.

Pattern No. 1:

2T 2T 3T 3T 4T 4T 5T 5T 6T 6T 7T 7T 8T 8T

M S M S M S M S M S M S M S

Pattern No. 2:

2T 2T 3T 3T 4T 4T 5T 5T 6T 6T 7T 7T 8T 8T

S M S M S M S M S M S M S M

where M and S stand for mark and space respectively.

M.2 Detection method

Read and detect the data signal with the following equalization coupled with the detection method given in 24.2.3. The threshold value TV may be varied in this test to compensate for the edge motion of the marks due to parameter variations.

$Eq(\omega) = 1 - 2A\cos(\omega \cdot 2T)$

where:

$A = 0{,}13$

$\omega = 2\pi f$

T is the Channel clock period for the zone being read.

This equalizer can be implemented with a five tap, tapped delay line filter having tap weights of: -A, 0, 1, 0, -A and 0, -A ,1, -A, 0 and clock periods specified in 14.1 for 30 mm and 60 mm radii respectively with a tap delay of 23,0 ns and a disk rotational frequency of 50 Hz.

Measure the detected signal from the written tracks in two ways using a time interval analyzer:

1) the mean leading-to-trailing edge (mark) lengths

and

2) the mean trailing-to-leading edge (space) lengths.

M.3 Measurement process

The measurements shall be made using 10^5 independent time interval samples on several tracks at each radial location. The offset for any desired run of length n is the absolute value of the difference of the detected signal length L_n minus n times T. Adjust the threshold level once for both measurements for each pattern to minimize the worst case mark and space offset for this radial position and express it as a percentage of the Channel bit time T.

©ISO/IEC 2002 - All rights reserved
Copyright International Organization for Standardization
Reproduced by IHS under license with ISO
No reproduction or networking permitted without license from IHS
Not for Resale

M.4 Threshold follower

This tracking threshold follower (or equivalent) shall be used during certain signal measurements as defined in the specific test procedures. A tracking threshold follower is required to establish and maintain the signal base line level for the data detection process. Its purpose is to compensate for local media variances in reflectivity, recording sensitivity, and for changes in signal d.c. content caused by some recorded data patterns observed during the measurement process.

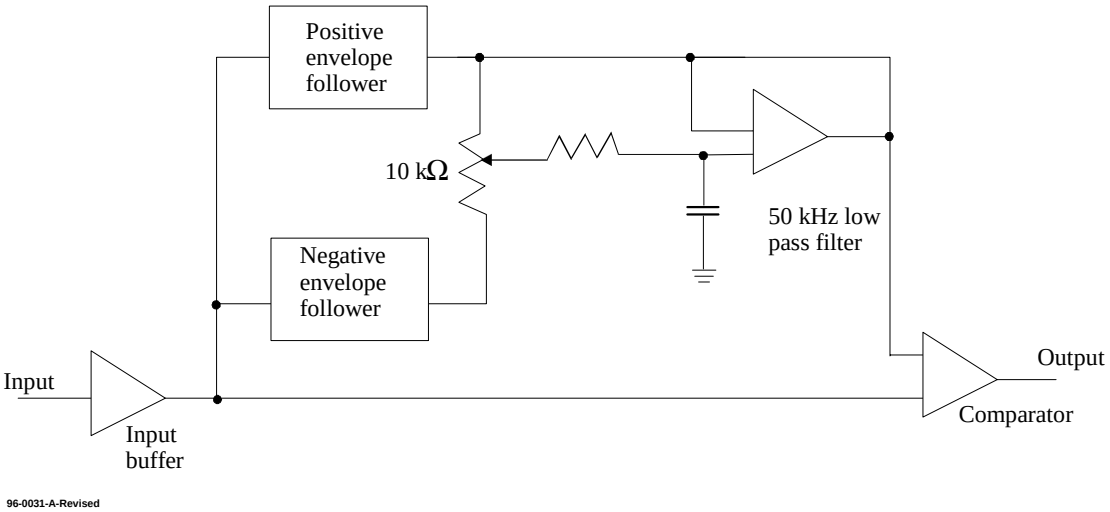

Figure M.1a - Tracking threshold block diagram

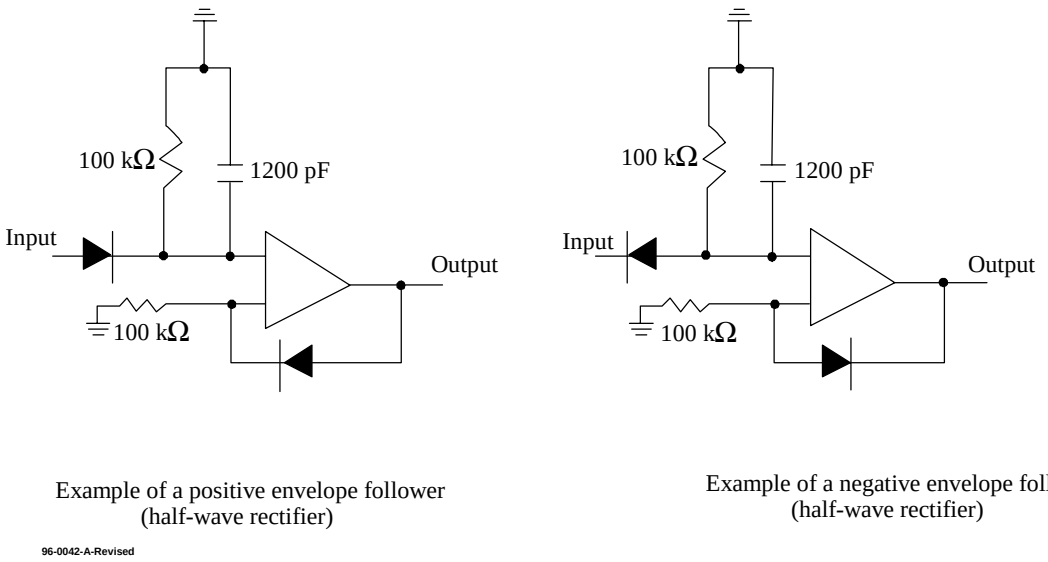

Figure M.1b - Envelope followers using matched diodes

Figure M.1 - Threshold Follower

©ISO/IEC 2002 - All rights reserved

Copyright International Organization for Standardization
Reproduced by IHS under license with ISO
No reproduction or networking permitted without license from IHS
Not for Resale

Annex N
(normative)

Requirements for interchange

N.1 Equipment for writing

The disk under test shall have been written with arbitrary data by a disk drive for data interchange use in the operating environment.

N.2 Test equipment for reading

N.2.1 General

The read test shall be performed on a test drive in the test environment. The rotational frequency of the disk when reading shall be as defined in clause 9.5.

The direction of rotation shall be as defined in clause 10.5.9

N.2.2 Read Channel

N.2.2.1 Characteristics of the optical beam

The optical beam used for reading shall comply with the requirements of 9.2 b), c), d) and f).

N.2.2.2 Read power

The read power shall comply with the requirements of 9.3.

N.2.2.3 Optics

The optical head used for reading shall comply with the requirements of annex N.

N.2.2.4 Read amplifier

The read amplifier after the photo detector in both Channels 1 and 2 shall have a flat response from d.c. to 37 MHz within 1 dB.

N.2.2.5 Analog to binary conversion

The signals from the read amplifier shall be converted from analog to binary. The converter for Channel 1 shall work properly for signals from pre-recorded marks with properties as defined in 22 and 23.

The converter for Channel 2 shall work properly for signals from user-written marks with properties as defined in 26 and 27.

N.2.2.6 Binary-to-digital conversion

The binary signal shall be converted to a digital signal according to the rules of the recording code.

N.2.3 Tracking

The open-loop transfer function for the axial and radial tracking servo shall be

$$H = \frac{(2\pi f_0)^2}{cs^2}\left(\frac{1+\frac{sc}{2\pi f_0}}{1+\frac{s}{2\pi f_0 c}}\right)$$

where $s = i2\pi f$, within an accuracy such that $|1+H|$ not deviate more than ± 20% from its nominal value in a bandwidth from 50 Hz to 10 kHz.

The constant c shall be 3. The open-loop 0-dB frequency f_0 shall be 1 550 Hz for the axial servo and 2 340 Hz for the radial servo. The open-loop d.c. gain of the axial servo shall be at least 80 dB.

©ISO/IEC 2002 - All rights reserved
Copyright International Organization for Standardization
Reproduced by IHS under license with ISO
No reproduction or networking permitted without license from IHS
Not for Resale

N.3 Requirements for the digital read signals

A byte error is defined by a byte in which one or more bits have a wrong setting, as detected by the error detection and correction circuit.

N.3.1 Any sector accepted as valid during the writing process shall not contain byte errors in Channel 2 after the error correction circuit.

N.3.2 Any sector not accepted as valid during the writing process shall have been rewritten according to the rules for defect management.

N.4 Requirements for the digital servo signals

The focus of the optical beam shall not jump tracks voluntarily.

N.5 Requirement for interchange

An interchanged optical disk cartridge meets the requirements for interchangeability if it meets the requirements of N.3 and N.4 when it is written on an interchange drive according to N.1 and read on a test drive according to N.2.

©ISO/IEC 2002 - All rights reserved

Copyright International Organization for Standardization
Reproduced by IHS under license with ISO
No reproduction or networking permitted without license from IHS
Not for Resale

Annex P
(normative)

Measurement implementation for Cross-track signal

The Cross-track signal shall be measured by using the implementation shown in figure P.1 with the following characteristics.

Droop Rate:

$$0{,}1(1/\mu s) \le \frac{\Delta I / I_{bottom}}{\Delta t} =\le 0{,}2(1/\mu s)$$

Bottom Trace Error (BTE):

$$\left| \frac{I_{\text{bottom-}I_{\text{bh}}}}{I_{\text{bhmax}}} \right| \le 0{,}05$$

I_{bh}: Bottom-hold signal at the bottom position

I_{bottom}: Channel 1 signal at the bottom position

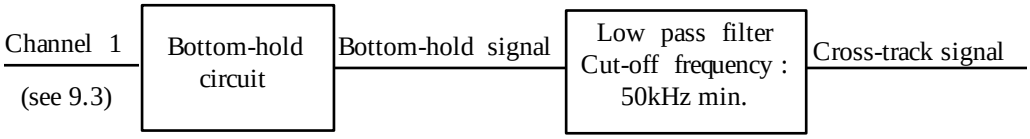

Figure P.1 - Measurement implementation for Cross-track signal

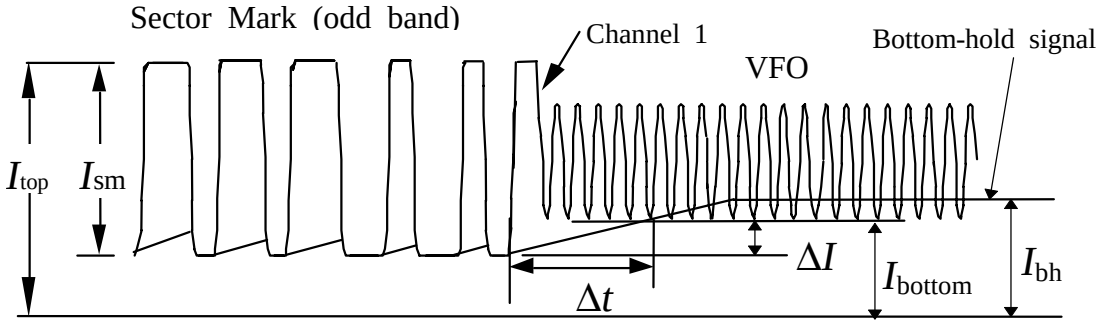

Figure P.2 - Illustration of the various parameters for bottom-hold characteristics.

©ISO/IEC 2002 - All rights reserved
Copyright International Organization for Standardization
Reproduced by IHS under license with ISO
No reproduction or networking permitted without license from IHS
Not for Resale

Annex Q
(normative)

Asymmetry measuring definition

The asymmetry of signals from headers (clause 22.4), embossed Recording field (clause 23.2) and user-written data (clause 30.2.3) shall be measured based on the following definitions.

Q.1 Asymmetry of signal from header (clause 22.4)

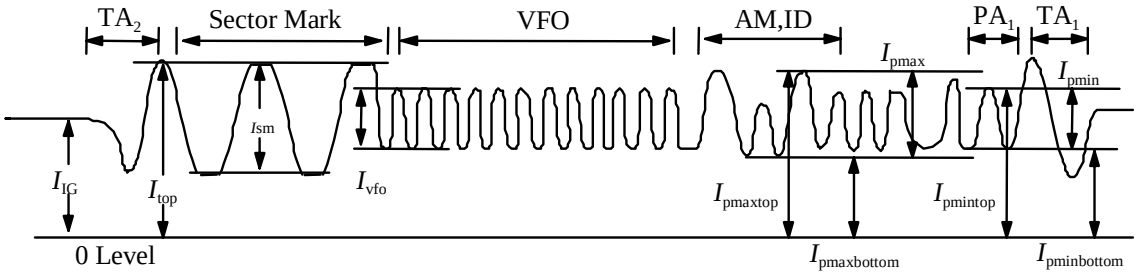

Figure Q.1 - Signal from Header in channel 1

$$\text{Asymmetry} = \frac{1/2\{(I_{pmaxtop} + I_{pmaxbottom}) - (I_{pmintop} + I_{pminbottom})\}}{(I_{pmaxtop} - I_{pmaxbottom})}$$

where I_{pmin} and I_{pmax} are the signals with minimum and maximum amplitude in that sector from Address Mark, ID, and PA. $I_{pmaxtop}$ and $I_{pmaxbottom}$ are the signals of top and bottom level of I_{pmax}. $I_{pmintop}$ and $I_{pminbottom}$ are the signals of top and bottom level of I_{pmin}.

Q.2 Asymmetry of signal from embossed Recording field (clause 23.2)

$$\text{Asymmetry} = \frac{1/2\{(I_{pmaxtop} + I_{pmaxbottom}) - (I_{pmintop} + I_{pminbottom})\}}{(I_{pmaxtop} - I_{pmaxbottom})}$$

where I_{pmin} and I_{pmax} are the signals with minimum and maximum amplitude in embossed Recording field of sector. $I_{pmaxtop}$ and $I_{pmaxbottom}$ are the signals of top and bottom level of I_{pmax}. $I_{pmintop}$ and $I_{pminbottom}$ are the signals of top and bottom level of I_{pmin}.

Q.3 Asymmetry of signal from user-written data (clause 30.2.3)

$$\text{Asymmetry} = \frac{1/2\{(I_{Ltop} + I_{Lbottom}) - (I_{Htop} + I_{Hbottom})\}}{(I_{Ltop} - I_{Lbottom})}$$

where the notations are as follows:

©ISO/IEC 2002 - All rights reserved

Copyright International Organization for Standardization
Reproduced by IHS under license with ISO
No reproduction or networking permitted without license from IHS
Not for Resale

I_L is a peak-to-peak value of the Channel 2 signal (see clause 9.2) for 8T marks and 8T spaces, written under any of the conditions given in clause 25.3, and read under the conditions specified in clause 20.2.2 c). An 8T is the longest interval allowed by the RLL(1,7) code for each zone.

I_H is a peak-to-peak value of the Channel 2 signal for 2T marks and 2T spaces, written under the conditions given in clause 25.3, and read under the condition specified in clause 20.2.2 c). A 2T is the lowest interval allowed by the RLL(1,7) code for each zone.

I_{Ltop} and $I_{Lbottom}$ are the signals of top and bottom level of I_L. I_{Htop} and $I_{Hbottom}$ are the signals of top and bottom level of I_H.

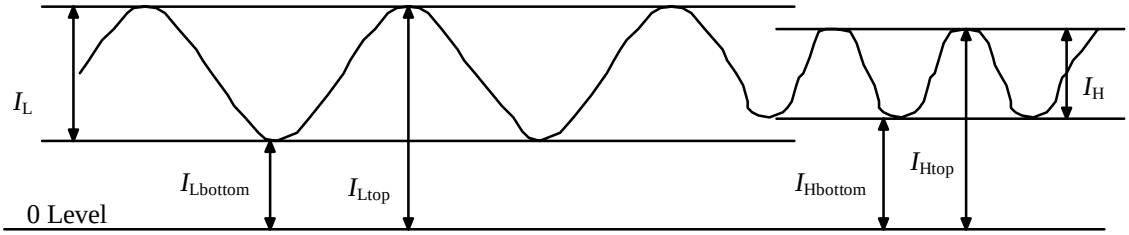

Figure Q.2 - Definition of I_L and I_H

©ISO/IEC 2002 - All rights reserved
Copyright International Organization for Standardization
Reproduced by IHS under license with ISO
No reproduction or networking permitted without license from IHS
Not for Resale

Annex R
(informative)

Office environment

R.1 Air cleanliness

Due to their construction and mode of operation optical disk cartridges have considerable resistance to the effects of dust particles around and inside the disk drive. Consequently it is not generally necessary to take special precautions to maintain a sufficiently low concentration of dust particles.

Operation in heavy concentrations of dust should be avoided e.g. in a machine shop or on a building site.

Office environment implies an environment in which personnel may spend a full working day without protection and without suffering temporary or permanent discomfort.

R.2 Effects of operation

In the office environment (as well as other environments) it is possible for an optical disk drive to degrade the quality of written marks if the read power is applied to a single track for a long period of time. This would happen if a media in a drive remains loaded, the drive remains in the ready status, and is in jump-back mode on one particular track. If this occurs at the maximum operating temperature (55 ^{o}C) and at the maximum allowable bias field (32 000 A/m), the marks on the media may be degraded. The media manufacturer's selection of the value for the maximum read powers allowed in the User Zone as well as the optical drive manufacturer's read power management method should reflect this possibility and be designed to minimize any risk to data integrity.

©ISO/IEC 2002 - All rights reserved

Copyright International Organization for Standardization
Reproduced by IHS under license with ISO
No reproduction or networking permitted without license from IHS
Not for Resale

Annex S
(informative)

Derivation of the operating climatic environment

This annex gives some background on how some of the conditions of the operating environment in 8.1.2 have been derived.

S.1 Standard climatic environment classes

The conditions of the ODC operating environment are, with a few exceptions mentioned below, based on parameter values of the IEC standard climatic environment class 3K3 described in IEC publication 721-3-3. This publication defines environmental classes for stationary use of equipment at weather-protected locations.

The IEC class 3K3 refers to climatic conditions which

"... may be found in normal living or working areas, e.g. living rooms , rooms for general use (theatres restaurants etc.), offices, shops, workshops for electronic assemblies and other electrotechnical products, telecommunication centres, storage rooms for valuable and sensitive products."

S.2 Overtemperature considerations

While IEC class 3K3 defines the limits for the room climate only, the ODC operating environment specification in this International Standard takes into consideration also system and drive overtemperature. This means that when inserted in a drive, the ODC will sense a temperature which is above the ambient room temperature. The figures in the operating environment specification have been calculated from the assumption that overtemperature may be up to 20°C.

S.3 Absolute humidity

The introduction of the parameter

absolute humidity (unit : g water / m^3 of air)

is very useful when studying overtemperature. When the temperature rises inside a drive, the relative humidity goes down but the absolute humidity remains substantially constant. So, making room for overtemperature in the operating environment specification affects not only the upper temperature limit but also the lower relative humidity limit. The relationship between these parameters is shown in the climatogram (the relative humidity vs. temperature map) of the ODC operating environment, figure S.1.

The absolute humidity restrictions influence the operating environment in the following two ways:

i. Combination of high temperatures and high relative humidities are excluded. Such combinations could have negative influence on the performance and the life of ODCs.

ii. Combinations of low temperatures and low relative humidities are excluded. Such combinations are very unlikely to occur in worldwide normal office environments.

S.4 Deviations from the IEC standard environment class

Apart from the change introduced by the overtemperature considerations above, there are a few more parameter values which are not based on IEC class 3K3. These are:

– Atmospheric pressure

  The IEC 3K3 lower limit of 70 kPa has been extended to 60 kPa. ODCs according to this International Standard show no intrinsic pressure sensitivity and 70 kPa excludes some possible markets for ODCs.

– Absolute humidity

  The IEC 3K3 value for the upper limit of 25 g/m^3 has been raised to 30 g/m^3 in view of some expected operation in portable devices outside the controlled office environment.

--`,,`,,`-`-`,,`,,`,`,,`---
©ISO/IEC 2002 - All rights reserved
Copyright International Organization for Standardization
Reproduced by IHS under license with ISO
No reproduction or networking permitted without license from IHS
Not for Resale

– Temperature

  The maximum temperature around the ODC, i.e. room temperature plus overtemperature, has been limited to 55 °C (while IEC 3K3 + 20 °C would have become 60 °C). For ODCs according to this International Standard, however, the 55 °C limit is considered to be a physical limit above which operation (as well as storage) is not safe.

  This means that equipment designers may want to ensure adequate cooling inside the drive especially when the room temperature approaches the upper IEC 3K3 limit of 40 °C.

– Further

  The rates of change (the gradients) of temperature and relative humidity are not according to IEC 3K3.

S.5 Wet bulb temperature specifications

Instead of specifying limits for the absolute humidity, some of the earlier standards for ODCs as well as those for other digital data storage media often use restrictions of the parameter

wet bulb temperature (unit: °C)

in order to avoid too severe combinations of high temperatures and high relative humidities.

In order to facilitate comparisons between different specifications, figure S.2 and table S.1 show wet bulb temperatures of interest for the ODC operating environment, as well as for the testing and storage environments. Since wet bulb temperatures vary slightly with the atmospheric pressure, the diagram is valid for the normal pressure of 101,3 kPa only.

©ISO/IEC 2002 - All rights reserved

Copyright International Organization for Standardization
Reproduced by IHS under license with ISO
No reproduction or networking permitted without license from IHS
Not for Resale

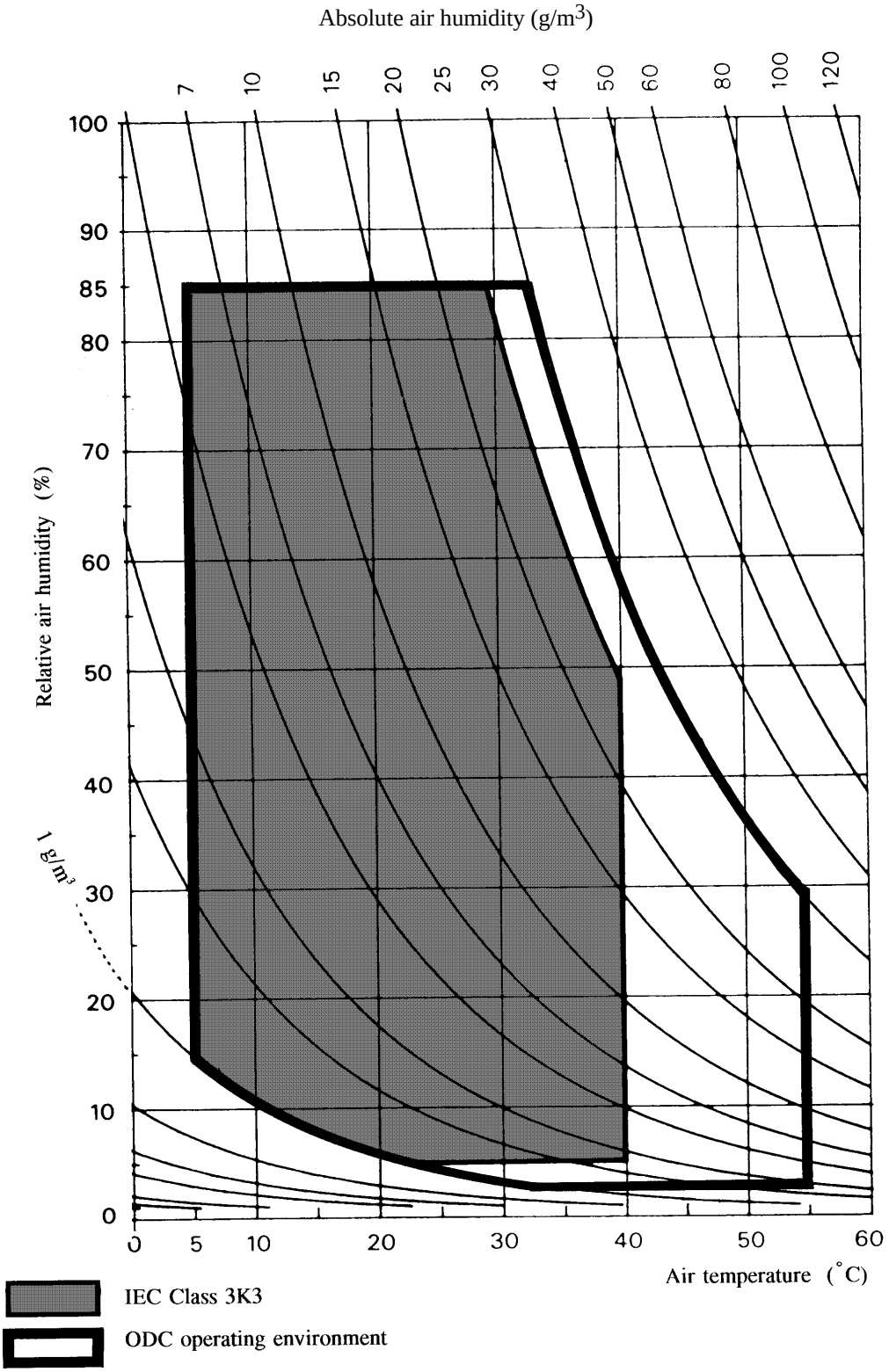

Figure S.1 - Climatogram of IEC Class 3K3 and the ODC operating environment

©ISO/IEC 2002 - All rights reserved
Copyright International Organization for Standardization
Reproduced by IHS under license with ISO
No reproduction or networking permitted without license from IHS
Not for Resale

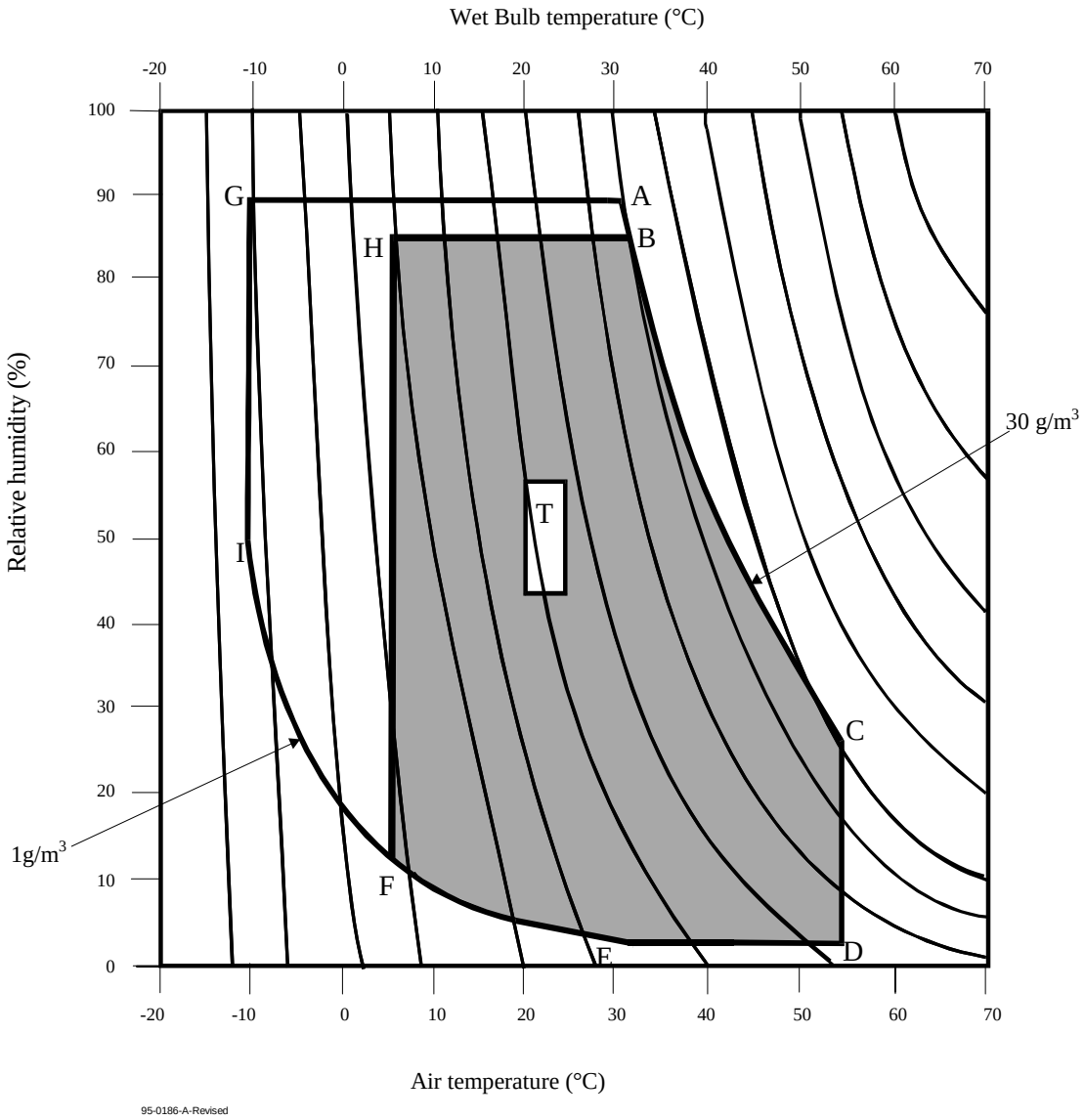

Figure S.2 - Wet bulb temperatures of the operating and storage environments

The points A to I and area T are defined in table S.1.

©ISO/IEC 2002 - All rights reserved

Copyright International Organization for Standardization
Reproduced by IHS under license with ISO
No reproduction or networking permitted without license from IHS
Not for Resale

Table S.1 - Position of the main points of Figure S.2

	Air Temperature °C	**Relative Humidity** %	**Wet bulb temperature** °C
A	31,7	90,0	30,3
B	32,8	85,0	30,6
C	55,0	28,8	35,5
D	55,0	3,0	22,2
E	31,7	3,0	12,1
F	5,0	14,7	-1,4
G	-10,0	90,0	-10,3
H	5,0	85,0	3,9
I	10,0	46,8	-11,6
Test environment (T)	23,0 °C ± 2,0 °C	50,0 % ± 5,0 %	---
Storage environment	is determined by A-B-C-D-E-F-G		
Operating environment	is dete mined by B-C-D-E-F-H		

©ISO/IEC 2002 - All rights reserved
Copyright International Organization for Standardization
Reproduced by IHS under license with ISO
No reproduction or networking permitted without license from IHS
Not for Resale

Annex T
(informative)

Transportation

T.1 General

As transportation occurs under a wide range of temperature and humidity variations, for differing periods, by many methods of transport and in all parts of the world it is not possible to specify conditions for transportation or for packaging.

T.2 Packaging

The form of packaging should be agreed between sender and recipient or, in the absence of such agreement, is the responsibility of the sender. It should take account of the following hazards.

T.2.1 Temperature and humidity

Insulation and wrapping should be designed to maintain the conditions for storage over the estimated period of transportation.

T.2.2 Impact loads and vibration

Avoid mechanical loads that would distort the shape of the cartridge.

Avoid dropping the cartridge.

Cartridges should be packed in a rigid box containing adequate shock absorbent material.

The final box should have a clean interior and a construction that provide sealing to prevent the ingress of dirt and moisture.

©ISO/IEC 2002 - All rights reserved

Copyright International Organization for Standardization
Reproduced by IHS under license with ISO
No reproduction or networking permitted without license from IHS
Not for Resale

Annex U
(informative)

Sector retirement guidelines

This International Standard assumes that up to 8 191 sectors may be replaced in any of the following cases:

- A sector does not have at least one reliable ID field.
- Only one of the two ID fields in one sector is reliable, and the current sector number is contradictory to the one anticipated by the preceding sectors.
- A single defect of more than 80 bytes in a 4 096-byte sector, or 40 bytes in a 2 048-byte sector is detected.
- The total number of defective bytes exceeds 120 bytes in a 4 096-byte sector (60 bytes in a 2 048-byte sector), or 5 bytes in one ECC interleave of a 4 096-byte sector (5 bytes in a 2 048-byte sector).
- For Type WO the total number of defective bytes in the SWF field, as specified in 15.11.3, exceeds 2.

©ISO/IEC 2002 - All rights reserved
Copyright International Organization for Standardization
Reproduced by IHS under license with ISO
No reproduction or networking permitted without license from IHS
Not for Resale

Annex V
(informative)

Track deviation measurement

The deviation of a track from its nominal location is measured in the same way as a drive sees a track, i.e. through a tracking servo. The strength of the Reference Servo used for the test is in general less that the strength of the same servo in a normal drive. The difference in strength is intended for margins in the drive. The deviation of the track is related to the tracking error between the track and the focus of the optical beam, remaining after the Reference Servo. The tracking error directly influences the performance of the drive, and is the best criterion for testing track deviations.

The specification of the axial and radial deviations can be described in the same terms. Therefore, this annex applies to both axial and radial track deviations.

V.1 Relation between requirements

The acceleration required by the motor of the tracking servo to make the focus of the optical beam follow the tracks on the disk (see 11.4.6 and 11.4.8) is a measure for the allowed deviations of the tracks. An additional measure is the allowed tracking error between the focus and the track (see 20.2.4). The relation between both is given in figure V.1 where the maximum allowed amplitude of a sinusoidal track deviation is given as a function of the frequency of the deviation. It is assumed in the figure that there is only one sinusoidal deviation present at a time.

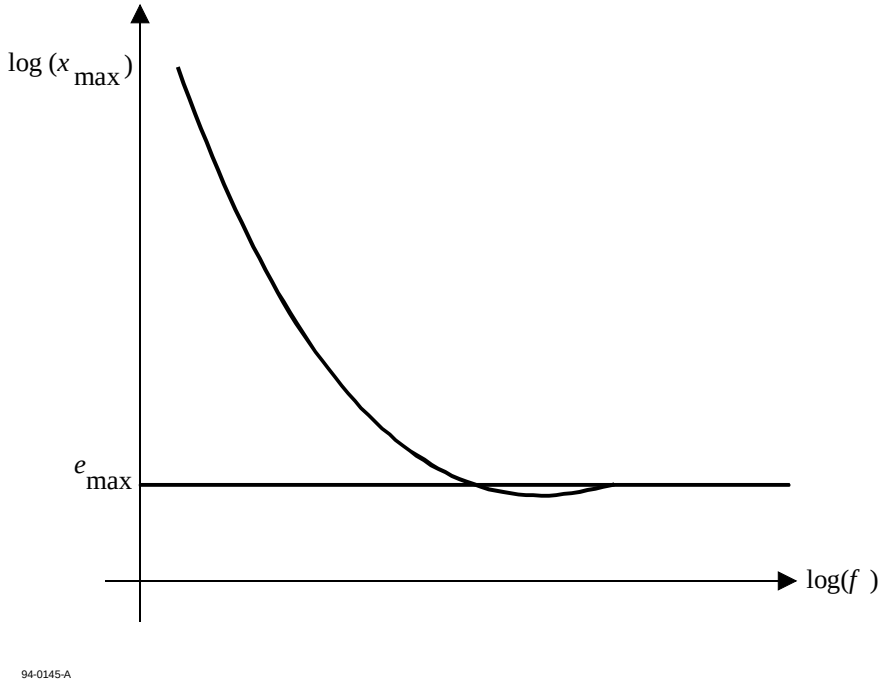

Figure V.1 - Maximum allowed amplitude of a single , sinusoidal track deviation

At low frequencies the maximum allowed amplitude x_{max} is given by

$$x_{max} = a_{max} / (2\pi f)^2, \quad (1)$$

where a_{max} is the maximum acceleration of the servo motor.

At high frequencies the maximum allowed amplitude x_{max} is given by

$$x_{max} = e_{max} \quad (2)$$

where e_{max} is the maximum allowed tracking error. The connection between both frequency regions is given in V.3.

©ISO/IEC 2002 - All rights reserved

Copyright International Organization for Standardization
Reproduced by IHS under license with ISO
No reproduction or networking permitted without license from IHS
Not for Resale

V.2 Reference Servo

The above restrictions of the track deviations are equal to the restriction of the track deviations for a Reference Servo. A Reference Servo has a well-defined transfer function, and reduces a single, sinusoidal track deviation with amplitude x_{max} to a tracking error e_{max} as in figure V.1.

The open-loop transfer function of the Reference Servo shall be

$$H_s(\mathrm{i}\omega) = \frac{1}{\mathrm{c}}\left(\frac{\omega_0}{\mathrm{i}\omega}\right)^2 \frac{1+\frac{\mathrm{i}\omega c}{\omega_0}}{1+\frac{\mathrm{i}\omega}{c\omega_0}} \qquad (3)$$

where $\mathrm{i} = \sqrt{-1}$, $\omega = 2\pi f$ and $\omega_0 = 2\pi f_0$, with f_0 the 0 dB frequency of the open-loop transfer function. The constant c gives the cross-over frequencies of the lead-lag network of the servo: the lead break frequency $f_1 = \frac{f_0}{\mathrm{c}}$ and the lag break frequency $f_2 = f_0 \times \mathrm{c}$. The reduction of a track deviation x to a tracking error *e* by the Reference Servo is given by

$$\frac{e}{x} = \frac{1}{1+H_s} \qquad (4)$$

If the 0 dB frequency is specified as

$$\omega_0 = \sqrt{\frac{a_{max}\mathrm{c}}{e_{max}}} \qquad (5)$$

then a low-frequency track deviation with an acceleration a_{max} will be reduced to a tracking error e_{max}, and a high frequency track deviation will not be reduced. The curve in figure V.1 is given by

$$x_{max} = e_{max}\left|1+H_s\right| \qquad (6)$$

The maximum acceleration required from the motor of this Reference Servo is

$$a_{max}(\text{motor}) = e_{max}\omega^2\left|1+H_s\right| \qquad (7)$$

At low frequencies $f > f_0 / \mathrm{c}$ applies

$$a_{max}(\text{motor}) = a_{max}(\text{track}) = \frac{(\omega_0)^2 e_{max}}{\mathrm{c}} \qquad (8)$$

Hence, it is permitted to use $a_{max}(\text{motor})$ as specified for low frequencies in 11.4.6 and 11.4.8 for the calculation of ω_0 of a Reference Servo.

V.3 Requirement for track deviations

The track deviations shall be such that, when tracking with a Reference Servo on a disk rotating at the specified frequency, the tracking error shall not be larger than e_{max} during more than 7,2 µs.

The open-loop transfer function of the Reference Servo for axial and radial tracking shall be given by equation (3) within an accuracy such that $|1+H|$ does not differ by more than ± 20% from its nominal value in a bandwidth from 50 Hz to 170 kHz. The constant c shall be 3. The 0 dB frequency $\frac{\omega_0}{2\pi}$ shall be given by equation (5), where a_{max} and e_{max} for axial and radial tracking are specified in 20.2.4, 11.4.6 and 11.4.8.

V.4 Measurement implementation

Three possible implementations for an axial or radial measurement system have been given below. H_a is the open-loop transfer function of the actual tracking servo of the drive. H_s is the transfer function for the Reference Servo as given in equation (3). *x* and *y* are the position of the track and the focus of the optical beam. e_s is the tracking error after a Reference Servo, the signal of which has to be checked according to the previous paragraph.

©ISO/IEC 2002 - All rights reserved
Copyright International Organization for Standardization
Reproduced by IHS under license with ISO
No reproduction or networking permitted without license from IHS
Not for Resale

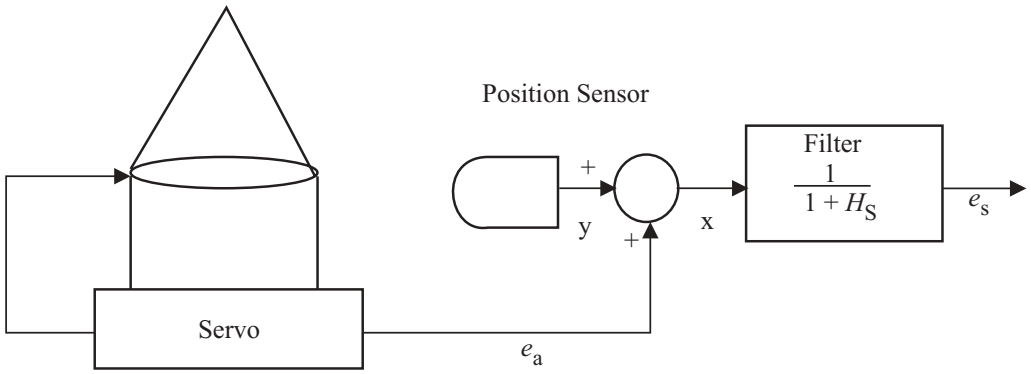

94-0081-B

Figure V.2 - Implementation of a Reference Servo by filtering the track position signal with the reduction characteristics of the Reference Servo

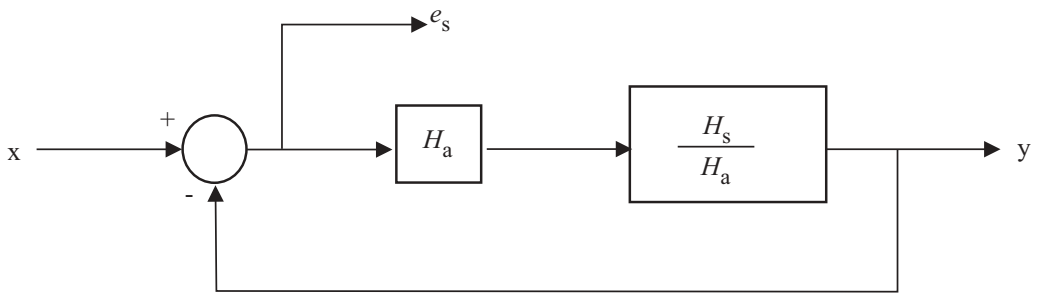

94-0082-B

Figure V.3 - Implementation of a Reference Servo by changing the transfer function of the actual servo

©ISO/IEC 2002 - All rights reserved

Copyright International Organization for Standardization
Reproduced by IHS under license with ISO
No reproduction or networking permitted without license from IHS
Not for Resale

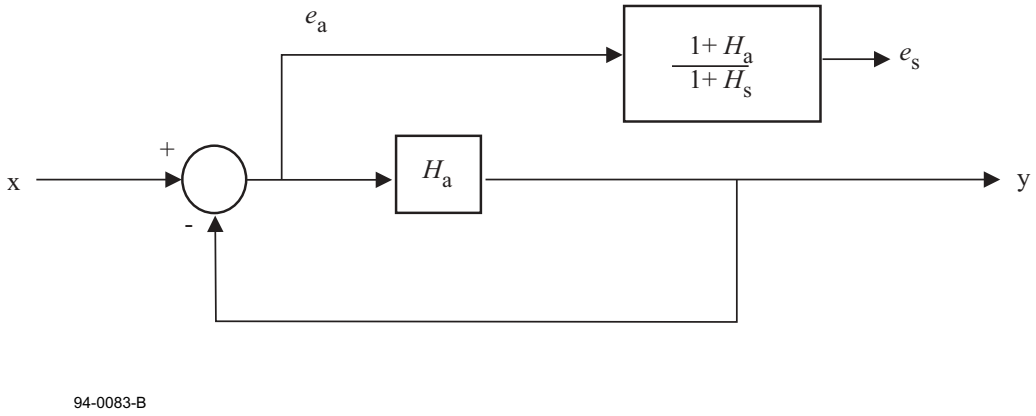

Figure V.4 - Implementation of a Reference Servo by changing the tracking error of the actual servo

The optimum implementation depends on the characteristics H_a and H_s. Good results for motors in leaf springs are often obtained by using separate circuits in a low and high frequency Channel. The implementation of figure V.2 is used in the low-frequency Channel, while that of figures V.3 or V.4 is used in the high-frequency Channel. The signals from both channels are added with a reversed cross-over filter to get the required tracking error. In the low-frequency Channel one can also use the current through the motor as a measure of the acceleration of the motor, provided the latter is free from hysteresis. The current must be corrected for the transfer function of the motor and then be converted to a tracking error with a filter with a transfer function $\frac{e}{a} = \frac{e}{x\omega^2}$ derived from equation (4).

©ISO/IEC 2002 - All rights reserved
Copyright International Organization for Standardization
Reproduced by IHS under license with ISO
No reproduction or networking permitted without license from IHS
Not for Resale

Annex W
(informative)

Values to be implemented in existing and future standards

This International Standard specifies values for bytes which identify optical disk cartridges which conform to this International Standard. It is expected that other types of optical disk cartridges will be developed in future. It is therefore recommended that the following values be used for these other cartridges.

W.1 Byte 0 of the Control Track PEP Zone

Settings of bits 6 to 4 have the following meanings:

000 means Constant Angular Velocity (CAV)
001 means Constant Linear Velocity (CLV)
010 means Zoned Constant Angular Velocity (ZCAV)
011 means Zoned Constant Linear Velocity (ZCLV)
110 means Logical Zoned Constant Angular Velocity (Logical ZCAV)

W.2 Byte 7 of the Control Track PEP Zone

The following bit patterns have the indicated meanings.

0000 0000	Read-only ODCs (ROM)
0001 0000	Write once ODCs using irreversible recording
0001 0001	WO ODC using MO recording
0010 0000	Rewritable ODCs using MO recording
0101 0001	WO ODCs using exchange coupled Direct Over Write (DOW)
0110 0000	Rewritable ODCs using exchange coupled DOW
0011 0000	Rewritable ODCs of the type phase change
1001 0000	Partial ROM of Write once ODCs
1010 0000	Partial ROM of MO
1011 0000	Partial ROM of phase change
0110 0000	Direct overwrite
1110 0000	Partially Embossed Direct overwrite
0001 0011	Write Once Direct overwrite

Note that when the most significant bit is set to ONE, this indicates a partial ROM.

See also 17.3.2.1.4.

©ISO/IEC 2002 - All rights reserved

Copyright International Organization for Standardization
Reproduced by IHS under license with ISO
No reproduction or networking permitted without license from IHS
Not for Resale

Annex X
(informative)

Measurement of the vertical birefringence of the substrate

This annex describes a non-contact measurement method for optical disk substrate birefringence which applies to both uncoated substrates and to disks coated with thinfilms. This technique will yield average or bulk values of both in-plane birefringence (IPB) and vertical birefringence (VB) with one procedure. The method uses a slightly modified variable angle spectroscopic ellipsometer (VASE), although the variable wavelength capability is unnecessary for a simple characterization at the operating point of this Standard. The method assumes the principal optical axes of the substrate align with the polar r, ϕ, z directions of the disk, which is valid for injection molded plastic disks. Finally, the method described also assumes that the contribution of the MO ellipticity of the coated MO film(s) to the measured optical retardation is negligible compared to the contribution of the substrate material.

An ellipsometric measurement of the phase retardation between orthogonal polarization states for a range of incident angles is made to uniquely determine the substrate refractive indices for the three principal directions (N_r, N_ϕ, N_z). This range of incident angles should be restricted only to limitations of the apparatus on the low angle side, and beam walk off on the high angle side. Angles ranging from -70° to $+70^o$ are recommended. Three angles would generally be the minimum necessary to establish VB.

When measuring a film-coated disk, the incident beam will reflect off both the top surface of the disk and the MO layers (see figure X.1). Since the substrate is relatively thin (- 1,2 mm), both of these reflections can enter the detector. To eliminate the undesirable top surface reflected beam, a simple beam stop is employed. This small blocking element consists of a thin (<0,5 mm) but stiff opaque strip which is inserted at the reflection point of the incident beam and which is in close proximity with the top of the disk. Adjust the position of the strip to achieve maximum reflected signal at the point of reflection. In this situation, the top surface reflection is blocked and only the bottom reflection off the internal surface (thin film surface) is allowed to pass to the polarization detector (see figure X.1). (CAUTION: If the strip is moved too close to the incident source, the main beam is blocked and the signal drops. If the strip is moved too far from the reflection point, both reflections are blocked and again the signal drops).

For clear substrates, the VASE can be used in the straight-through mode and the measurements made in transmission and again no contact is required.

For a disk where the principal optical axes are aligned with the cylindrical coordinates of the disk (which is almost universally the case), the following equation expresses the retardation as a function of angle of incidence to the indices of the disk: N_r, N_ϕ, N_z. The retardation data are regression fit to the non-linear analytical expression given below, and the indices are determined as free parameters.

$$\Delta = d \times \left(\sqrt{N_r^2 - \sin^2(\theta)} - \frac{N_\phi}{N_z} \sqrt{N_z^2 - \sin^2(\theta)} \right)$$

where Δ is the retardation and d is the thickness of the disk. The birefringence results from the differences between the indices

In plane: $\Delta N_{in} = N_r - N_\phi$

Vertical: $\Delta N_{vert} = 0{,}5\ (N_r + N_\phi) - N_z$

The dimensionless birefringence can be expressed in length units by multiplying ΔN_{in} or ΔN_{vert} by the substrate thickness d. In this case, the birefringence is expressed as nm of retardation.

©ISO/IEC 2002 - All rights reserved
Copyright International Organization for Standardization
Reproduced by IHS under license with ISO
No reproduction or networking permitted without license from IHS
Not for Resale

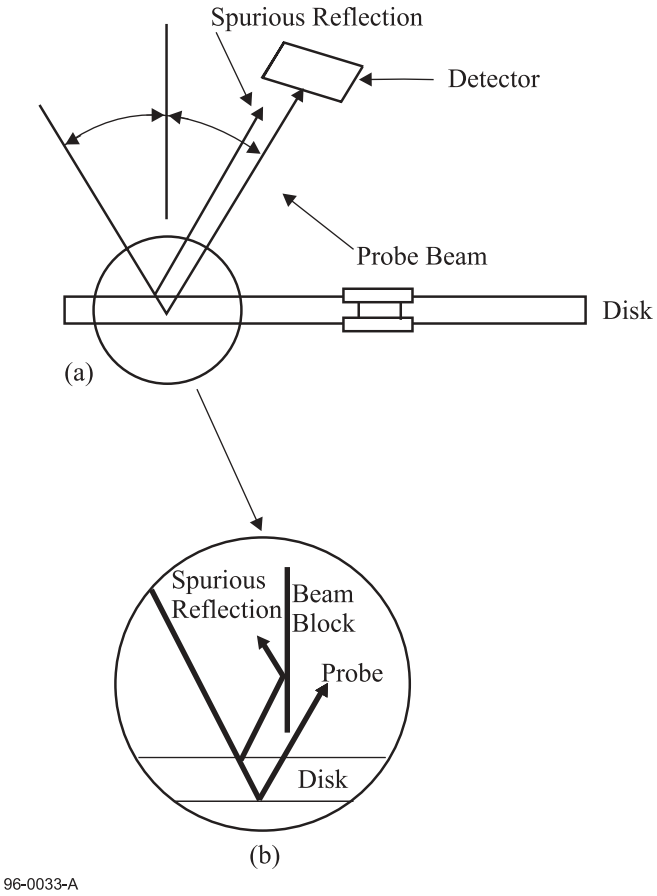

Figure X.1 (a) - Origin of spurious reflection. (b) - Non-contact beam blocking technique for eliminating spurious reflection.

©ISO/IEC 2002 - All rights reserved

Copyright International Organization for Standardization
Reproduced by IHS under license with ISO
No reproduction or networking permitted without license from IHS
Not for Resale

Annex Y
(informative)

Guidelines for the use of Type WO ODCs

This annex lists some important points to be observed when using the Type WO ODCs specified by this Standard.

a) Read the PEP and/or the SFP when the ODC is inserted into the drive to ascertain the media type, so as to enable and/or disable the appropriate host commands. If the drive is not intended to support this type of ODC, reject the disk with an appropriate error message and disallow any further operations on the disk.

b) Read the DDS when the disk is inserted into the drive to ascertain if the disk has been initialized. If it has, disallow re-initialization. If it has not been initialized, disallow access to the write once zone.

c) Erase the write once zone before initialization is complete. Record the DDSs only at the end of initialization to allow incomplete initializations to be detected.

   Before writing a sector, it must be determined whether or not the sector has been already written. This can be done in two ways. One method is to check the contents of the flag field between the Sector Header and the Data Record, and if recorded, the sector has been written and no attempt should be made to write the sector again.

   The second method is to read the data record and inspect the contents of the SWF field. If this field contains 8/8 bytes; 2 ID track bytes, 1 sector byte, and 5/5 (FF) bytes the sector has been written and no attempt should be made to write the sector again. These tests do not apply to the sectors that make up the DMAs.

d) Disallow commands that can directly or indirectly alter written data such as: SCSI Erase, SCSI Reassign Blocks, SCSI Update Block.

e) Disallow the SCSI Write Long command. Always write user data with SWF, CRC, and ECC fields as specified by this International Standard.

©ISO/IEC 2002 - All rights reserved
Copyright International Organization for Standardization
Reproduced by IHS under license with ISO
No reproduction or networking permitted without license from IHS
Not for Resale

Annex Z
(informative)

Laser power calibration for evaluation of media power sensitivity

Z.1 Variance of testing condition

For measurement of media power sensitivity specified in clause 25.3.4, laser power of the media tester should be calibrated carefully since the values of the media power sensitivity C are easily affected by the variation allowed for by the Reference drive. The laser spot profile on the magnetic layer varies with the optical variation allowed for by the Reference drive specified in clause 9.2. Table Z.1 shows the best and the worst conditions allowed by the Reference drive from the point of view of the write power sensitivity. The peak temperature for the worst condition is estimated to decrease by 21% from that for the best condition. Therefore media power sensitivity C should be carefully evaluated.

Table Z.1 - The best and worst conditions allowed for Reference drive.

	Best condition	**Worst condition**
λ	660 nm	670 nm
λ/NA	1,150 µm	1,165 µm
D/W	0,80	0,87
Variance of wave front at the optical head	0	$\lambda^2/330$
Disk tilt	0	2,8 mrad
Variation of Substrate thickness	0	50 µm

Z.2 Power calibration

Laser power calibration of the tester should be done in the following scheme. Use of a high speed front power monitor is recommended for precise calibration.

Step 1

Calibrate high-speed front monitor by a power meter (figure Z.1).

- The calibration can be done in a d.c. laser operation with a d.c. power meter.
- For the purpose of observing the write pulse shape during writing, a high speed (>100 MHz) front power monitor is recommended.

©ISO/IEC 2002 - All rights reserved

Copyright International Organization for Standardization
Reproduced by IHS under license with ISO
No reproduction or networking permitted without license from IHS
Not for Resale

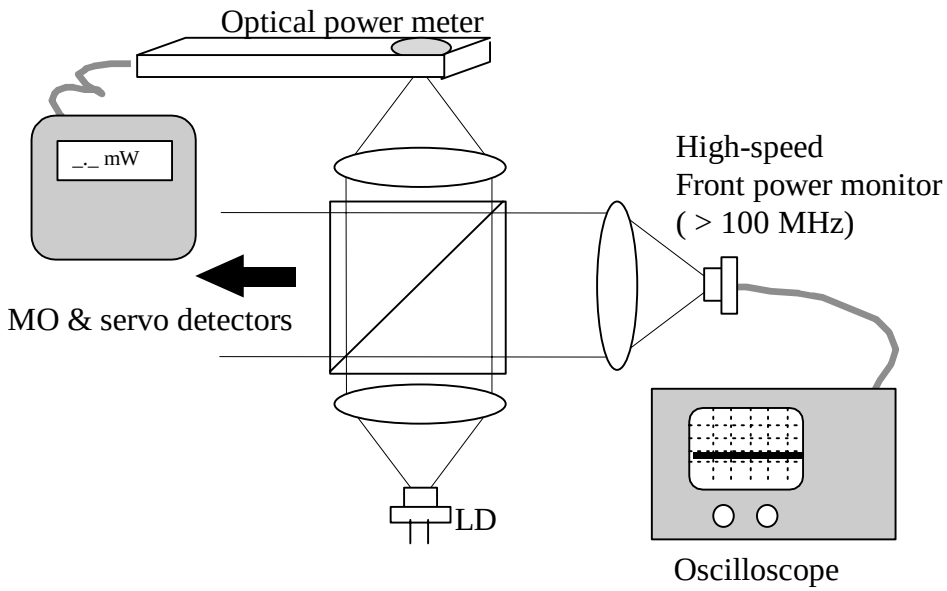

Figure Z.1 - Calibration of front power monitor

Step 2

Directly observe the write pulse shape during writing (figure Z.2).

- Pulse power in focused condition is different from that in un-focused condition because of the self coupled effect of the laser diode.
- Pulse power, pulse duration, and bias power level should be carefully observed in real testing condition.
- Check if shapes of three kinds of pulses, which is isolated pulses for 2T marks and two 2T spaced pulses for 4T marks, are completely identical. If not, significant error will appear in the measurement of C and E_{th}.

©ISO/IEC 2002 - All rights reserved
Copyright International Organization for Standardization
Reproduced by IHS under license with ISO
No reproduction or networking permitted without license from IHS
Not for Resale

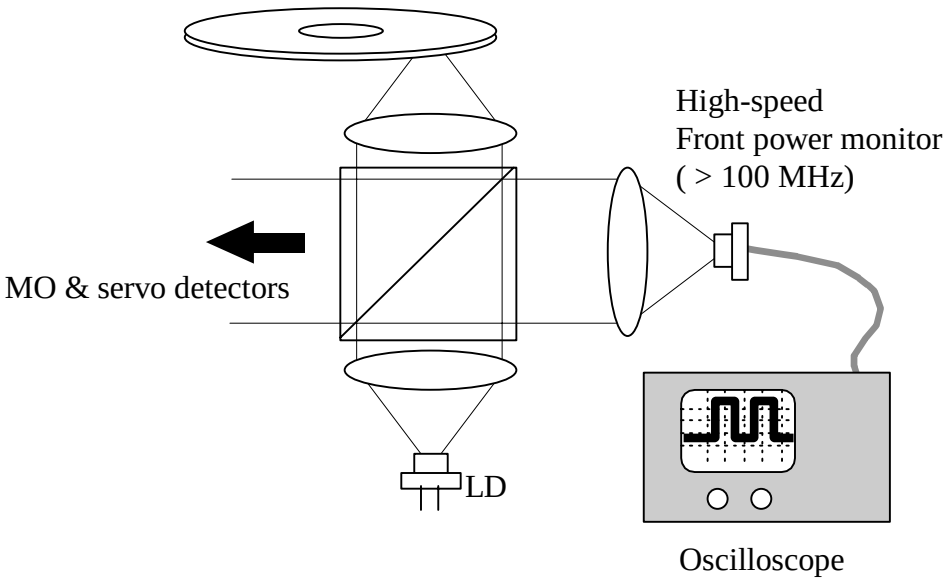

Figure Z.2 - Measurement of pulse power and pulse width

Step 3

Measure write pulse power and pulse width with appropriate filters.

- Ringing can be removed by a (Gaussian) low pass filter with a cut-off frequency of 80 MHz (figure Z.3a)
- For precise pulse energy measurement, average power level measurement is recommended unless high speed front monitor is available (figure Z.3b).

Notes for measurement:

Bias power level

Bias power level P_b should be measured carefully (with an accuracy of ± 0,05 mW) because error in the P_b measurement may result in a significant error in measured C-value.

Disk temperature

Disk temperature should be kept at 25°C ± 1°C. Internal temperature may rise if the tester lid is closed.

Stray light

The stray light within the optical head may enter the objective lens and form a stray beam spot. Even if the temperature increase in the optical beam spot is small, the measurement for the light power through the objective lens may large.

Contamination of optical components (especially the objective lens)

If the light is absorbed by dust or other debris, the light power through the objective lens decreases. This can be measured by the power meter and does not, therefore, result in any complications. If the light is diverted instead of being absorbed, however, not all of the light power through the objective lens is valid for the temperature-up of the media; therefore, variance results. Frequent cleaning is required.

Beam spot size

Before the measurement of media power sensitivity, the beam profile of the tester should be checked by optical knife edge profiler. Unless the measured spot diameter is far from 1,08 µm, which is the best diameter for Reference drive, the above conditions such as disk tilt should be carefully adjusted.

©ISO/IEC 2002 - All rights reserved

Copyright International Organization for Standardization
Reproduced by IHS under license with ISO
No reproduction or networking permitted without license from IHS
Not for Resale

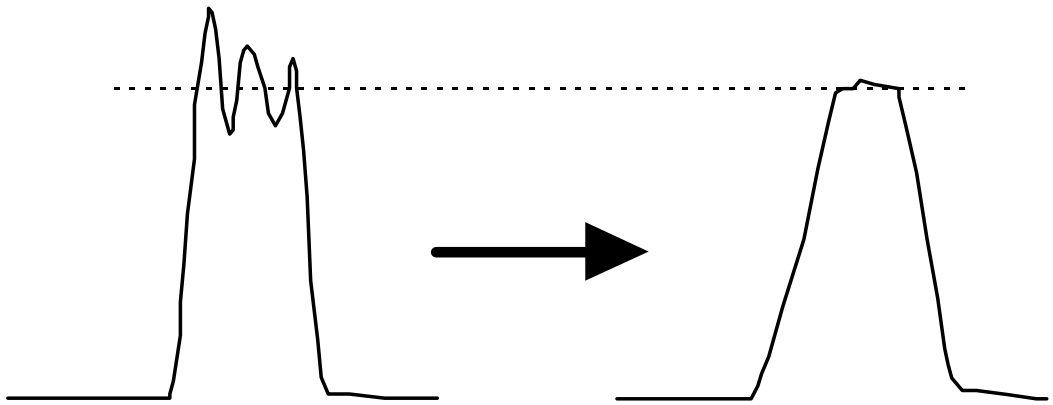

Figure Z.3a – Elimination of ringing by LPF (~ 100 MHz)

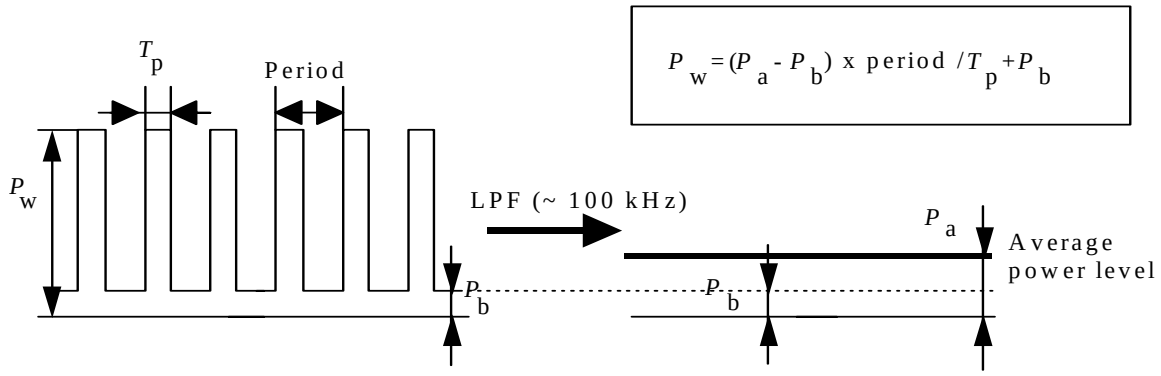

Figure Z.3b - Determination of pulse power from average power level

Figure Z.3 - Precise determination of pulse power from average power level

©ISO/IEC 2002 - All rights reserved
Copyright International Organization for Standardization
Reproduced by IHS under license with ISO
No reproduction or networking permitted without license from IHS
Not for Resale

Annex AA
(informative)

512-byte, 1 024-byte Sector Emulation

This International Standard provides for the recording of data in 512-byte and 1 024-byte increments through the technique of Sector Emulation. User data contained in block sizes of 512 or 1 024 bytes can be recorded into ODCs containing 4 096-byte physical sectors only. As a consequence, certain sectors may be only partially filled. When this occurs, the remaining portion of the sector is recorded with pad data. User data and pad data will be recorded in the sector according to the ECC and CRC rules that apply to 4 096-byte sectors.

A drive may rewrite existing user data contained in part of a physical sector. To accomplish this, data is read from the physical sector into buffer memory, user data is extracted, new data is attached, and this new field replaces the previous one.

The beginning of one Logical Track and the end of the previous Logical Track may share a physical 4 096-byte sector. Only one Emulated Sector size may be recorded on a single ODC.

Emulation offset describes the position within the first physical block where the emulated sector recording starts. It is specified as an offset measured in emulated sectors. In normal cases the offset is set to 0.

©ISO/IEC 2002 - All rights reserved

Copyright International Organization for Standardization
Reproduced by IHS under license with ISO
No reproduction or networking permitted without license from IHS
Not for Resale

ICS 35.220.30

Price based on 133 pages

© ISO/IEC 2002 – All rights reserved

Copyright International Organization for Standardization
Reproduced by IHS under license with ISO
No reproduction or networking permitted without license from IHS

Not for Resale