INTERNATIONAL STANDARD

ISO/IEC 20162

First edition
2001-12-01

Information technology — Data interchange on 300 mm optical disk cartridges of type WORM (Write Once Read Many) using irreversible effects — Capacity: 30 Gbytes per cartridge

Technologies de l'information — Échange de données sur cartouches de disque optique de 300 mm *de type WORM (écriture unique et lectures multiples) avec effets irréversibles — Capacité: 30 Gbytes par cartouche*

Reference number
ISO/IEC 20162:2001(E)

© ISO/IEC 2001

--`,,```,,,,````-`-`,,`,,`,`,,`---

Copyright International Organization for Standardization
Provided by IHS under license with ISO
No reproduction or networking permitted without license from IHS

Not for Resale

PDF disclaimer

This PDF file may contain embedded typefaces. In accordance with Adobe's licensing policy, this file may be printed or viewed but shall not be edited unless the typefaces which are embedded are licensed to and installed on the computer performing the editing. In downloading this file, parties accept therein the responsibility of not infringing Adobe's licensing policy. The ISO Central Secretariat accepts no liability in this area.

Adobe is a trademark of Adobe Systems Incorporated.

Details of the software products used to create this PDF file can be found in the General Info relative to the file; the PDF-creation parameters were optimized for printing. Every care has been taken to ensure that the file is suitable for use by ISO member bodies. In the unlikely event that a problem relating to it is found, please inform the Central Secretariat at the address given below.

© ISO/IEC 2001

All rights reserved. Unless otherwise specified, no part of this publication may be reproduced or utilized in any form or by any means, electronic or mechanical, including photocopying and microfilm, without permission in writing from either ISO at the address below or ISO's member body in the country of the requester.

ISO copyright office
Case postale 56 • CH-1211 Geneva 20
Tel. + 41 22 749 01 11
Fax + 41 22 749 09 47
E-mail copyright@iso.ch
Web www.iso.ch

Printed in Switzerland

--`,,```,,,,````-`-`,,`,,`,`,,`---

::

Copyright International Organization for Standardization
Provided by IHS under license with ISO
No reproduction or networking permitted without license from IHS

© ISO/IEC 2001 – All rights reserved

Not for Resale

Contents

		Page
Section 1 — General		**1**
1	Scope	**1**
2	Conformance	**1**
2.1	Optical Disk Cartridge (ODC)	**1**
2.2	Generating System	**1**
2.3	Receiving System	**1**
2.4	Compatibility statement	**1**
3	Normative references	**1**
4	Terms and definitions	**1**
4.1	case	**1**
4.2	Clamping Reference Area	**1**
4.3	Clamping Zone	**2**
4.4	Cyclic Redundancy Check (CRC)	**2**
4.5	Data Zone	**2**
4.6	defect management	**2**
4.7	Disk Reference Plane	**2**
4.8	entrance surface	**2**
4.9	Error Correction Code (ECC)	**2**
4.10	format	**2**
4.11	hub	**2**
4.12	interleaving	**2**
4.13	Logical Sector	**2**
4.14	Logical Block Address	**2**
4.15	mark	**2**
4.16	mark edge	**2**
4.17	mark edge recording	**2**
4.18	optical disk	**2**
4.19	optical disk cartridge (ODC)	**2**
4.20	polarization	**2**
4.21	prerecorded mark	**2**
4.22	read power	**2**
4.23	recording layer	**2**
4.24	Reed-Solomon code	**2**
4.25	space	**2**
4.26	spindle	**2**
4.27	substrate	**2**
4.28	track	**2**
4.29	track pitch	**2**
4.30	write-inhibit hole	**2**
5	Conventions and notations	**2**
5.1	Representation of numbers	**2**
5.2	Names	**3**
6	List of acronyms	**3**
7	General description of the optical disk cartridge	**3**
8	General requirements	**3**
8.1	Environments	**3**
8.1.1	Test environment	**3**
8.1.2	Operating environment	**4**

© ISO/IEC 2001 – All rights reserved

Copyright International Organization for Standardization
Provided by IHS under license with ISO
No reproduction or networking permitted without license from IHS
Not for Resale

8.1.3 Storage environment **4**
8.1.4 Transportation **4**
8.2 Temperature shock **4**
8.3 Safety requirements **4**
8.4 Flammability **5**

9 Reference Drive **5**

9.1 Optical system **5**
9.2 Optical beam **5**
9.3 Read Channel **5**
9.4 Tracking **5**
9.5 Rotation of the disk **5**

Section 2 — Mechanical and physical characteristics **7**

10 Dimensional and physical characteristics of the case **7**

10.1 General description of the case **7**
10.2 Relationship of Sides A and B **7**
10.3 Reference axes of the case **7**
10.4 Case drawings **7**
10.5 Dimensions of the case **7**
10.5.1 Overall dimensions **7**
10.5.2 Locator slots **8**
10.5.3 Side A / B indicator holes **8**
10.5.4 Side A / B indicator labels **9**
10.5.5 Insertion slots and detent features **9**
10.5.6 Gripper slots and gripper notches **10**
10.5.7 Write-inhibit hole **11**
10.5.8 Hub aperture and head window **11**
10.5.9 Shutters **11**
10.5.10 Shutter opener features **11**
10.5.11 User label areas **12**
10.5.12 Bar code area **12**
10.6 Mechanical characteristics **12**
10.6.1 Materials **12**
10.6.2 Mass **12**
10.6.3 Edge distortion **12**
10.6.4 Compliance **12**
10.6.5 Shutter opening force **12**
10.7 Drop test **12**

11 Dimensional, mechanical and physical characteristics of the disk **13**

11.1 General description of the disk **13**
11.2 Reference axis and plane of the disk **13**
11.3 Dimensions of the disk **13**
11.3.1 Hub dimension **13**
11.4 Mechanical characteristics **15**
11.4.1 Material **15**
11.4.2 Mass **15**
11.4.3 Moment of inertia **15**
11.4.4 Imbalance **15**
11.4.5 Axial deflection **15**
11.4.6 Axial acceleration **15**
11.4.7 Radial runout **15**
11.4.8 Radial acceleration **16**
11.4.9 Tilt **16**
11.5 Optical characteristics **16**
11.5.1 Index of refraction **16**
11.5.2 Thickness **16**
11.5.3 Birefringence **16**
11.5.4 Reflectance **16**

© ISO/IEC 2001 – All rights reserved
Copyright International Organization for Standardization
Provided by IHS under license with ISO
No reproduction or networking permitted without license from IHS
Not for Resale

12 Interface between cartridge and drive **17**

12.1 Clamping method **17**
12.2 Clamping force **17**
12.3 Capture cylinder **17**
12.4 Disk position in the operating condition **17**

Section 3 — Format of information **32**

13 General description **32**

14 Track format **32**

14.1 Track definition **32**
14.2 Direction of track spiral **32**
14.3 Track pitch **32**
14.4 Track numbering **32**
14.5 Track layout **32**
14.6 Segment format **32**
14.7 Servo Field format **32**
14.8 Address format **34**
14.9 Recordable Field format **34**

15 Zone organization **35**

15.1 Logical Sector format **35**
15.2 CRC and ECC bytes **36**
15.3 User Area - Format of Data Zones **36**
15.3.1 Detailed format of Data Zones **37**

16 Recording code **37**

16.1 Termination Field **37**
16.2 Data recording method for the RLL(1,7) Code **38**

17 Defect Management **38**

17.1 Defective Sectors recorded in the SDI **38**
17.2 Reading and writing Procedure **38**
17.3 Format of the Relocation Area **38**
17.4 Format of the Dynamic Relocation Maps Sectors **38**

18 Prerecorded Information **39**

18.1 Prerecorded Information definition **39**
18.2 Reserved regions **39**
18.3 Specific Disk Information (SDI) **39**
18.3.1 SDI Sector allocation **39**
18.3.2 SDI content **40**
18.4 Read Focus Optimization (RFO) Tracks **40**

Section 4 — Characteristics of Prerecorded Information **41**

19 Method of testing **41**

19.1 Environment **41**
19.2 Use of the Reference Drive **41**
19.2.1 Optics and mechanics **41**
19.2.2 Read power **41**
19.2.3 Read channel **41**
19.2.4 Tracking **42**
19.3 Definition of signals **42**

20 Prerecorded Information signal requirements **43**

20.1 Modulation Depth of preformatted marks **43**
20.2 Ratio of minimum and maximum Clock Mark signal amplitude with open tracking loop **43**
20.3 Clock Mark jitter **43**
20.4 Relative tangential displacement of preformatted marks **43**

© ISO/IEC 2001 – All rights reserved

Copyright International Organization for Standardization
Provided by IHS under license with ISO
No reproduction or networking permitted without license from IHS
Not for Resale

20.5 Variation of QWT Marks signal amplitude **43**
20.6 Track pitch **43**
20.7 Radial runout **43**
20.8 Radial accelerations **43**
20.9 Tracking Gain **43**

Section 5 — Characteristics of the recording layer **44**

21 Method of testing **44**

21.1 Test Regions **44**
21.2 Environment **44**
21.3 Use of the Reference Drive **44**
21.3.1 Optics and mechanics **44**
21.3.2 Read power **44**
21.3.3 Read Channel **44**
21.3.4 Tracking **44**
21.4 Write conditions **44**
21.4.1 Write pulse **44**
21.4.2 Nominal Write Power $P_{w\ nom}$ **45**
21.4.3 Nominal Write Power $P_{w\ nom}$ determination **45**
21.4.4 Writing Power boosts and droops **45**
21.4.5 Write Media Profile **45**

22 Write characteristics **45**

22.1 Signal modulation **45**
22.2 Signal Resolution **45**
22.3 Write power margin **45**

Section 6 — Characteristics of user data **46**

23 Method of testing **46**

23.1 Environment **46**
23.2 Use of the Reference Drive **46**
23.2.1 Optics and mechanics **46**
23.2.2 Read power **46**
23.2.3 Read channel **46**
23.2.4 Error correction **46**
23.2.5 Tracking **46**

24 Minimum quality of a Sector **46**

24.1 Servo Fields **46**
24.2 User-written data **47**
24.3 Pre-written data **47**

25 Data interchange requirements **47**

25.1 Tracking **47**
25.2 User-written and pre-written data **47**
25.3 Quality of disk **47**

Annexes

A - Air cleanliness class 100 000 **48**

B - Edge distortion test **49**

C - Compliance test **51**

D - Test method for measuring the adsorbent force of the hub **54**

E - Creeping One of Four Code (COF) **56**

F - PBA, LBA formats **57**

G - Interleave, CRC, ECC **59**

© ISO/IEC 2001 – All rights reserved
Copyright International Organization for Standardization
Provided by IHS under license with ISO
No reproduction or networking permitted without license from IHS
Not for Resale

H - Content of SDI Sectors **61**

J - SISIC (Selective Inter Symbol Interference Cancellation) data detection **64**

K - Requirements for interchange **66**

L - Shape and sequence of write pulses for testing **68**

M - Office environment **69**

N - Derivation of the operating climatic environment **70**

P - Transportation **75**

Q - Track deviation measurement **76**

© ISO/IEC 2001 – All rights reserved

Copyright International Organization for Standardization
Provided by IHS under license with ISO
No reproduction or networking permitted without license from IHS
Not for Resale

Foreword

ISO (the International Organization for Standardization) and IEC (the International Electrotechnical Commission) form the specialized system for worldwide standardization. National bodies that are members of ISO or IEC participate in the development of International Standards through technical committees established by the respective organization to deal with particular fields of technical activity. ISO and IEC technical committees collaborate in fields of mutual interest. Other international organizations, governmental and non-governmental, in liaison with ISO and IEC, also take part in the work. In the field of information technology, ISO and IEC have established a joint technical committee, ISO/IEC JTC 1.

International Standards are drafted in accordance with the rules given in the ISO/IEC Directives, Part 3.

The main task of the joint technical committee is to prepare International Standards. Draft International Standards adopted by the joint technical committee are circulated to national bodies for voting. Publication as an International Standard requires approval by at least 75 % of the national bodies casting a vote.

Attention is drawn to the possibility that some of the elements of this International Standard may be the subject of patent rights. ISO and IEC shall not be held responsible for identifying any or all such patent rights.

ISO/IEC 20162 was prepared by ECMA (as ECMA-317) and was adopted, under a special “fast-track procedure”, by Joint Technical Committee ISO/IEC JTC 1, *Information technology*, in parallel with its approval by national bodies of ISO and IEC.

Annexes A to L form a normative part of this International Standard. Annexes M to Q are for information only.

© ISO/IEC 2001 – All rights reserved
Copyright International Organization for Standardization
Provided by IHS under license with ISO
No reproduction or networking permitted without license from IHS
Not for Resale

Information technology — Data interchange on 300 mm optical disk cartridges of type WORM (Write Once Read Many) using irreversible effects — Capacity: 30 Gbytes per cartridge

Section 1 — General

1 Scope

This International Standard specifies the characteristics of a 300 mm optical disk cartridge (ODC) of Type WORM (Write Once Read Many) using irreversible effects, with a capacity of 30 Gbytes. This WORM ODC's uses writing effects that are inherently irreversible. Written marks cannot be erased and attempted modifications of the written marks are detectable.

This International Standard specifies

- the conditions for conformance testing and the Reference Drive;
- the environments in which the cartridges are to be operated and stored;
- the mechanical, physical and dimensional characteristics of the cartridge, so as to provide mechanical interchange ability between data processing systems;
- the format of the information on the disk, both pre-written and user-written, including the physical disposition of the tracks and sectors, the error correction codes, the modulation methods used;
- the characteristics of the prerecorded information on the disk;
- the recording characteristics of the disk, enabling processing systems to write data onto the disk;
- the minimum quality of user-written data on the disk, enabling data processing systems to read data from the disk.

This International Standard provides for interchange between optical disk drives. Together with a standard for volume and file structure it provides for full data interchange between data processing systems.

2 Conformance

2.1 Optical Disk Cartridge (ODC)

An Optical Disk Cartridge shall be in conformance with this International Standard if it meets the mandatory requirements specified herein.

2.2 Generating System

A generating system shall be in conformance with this International Standard if the ODC it generates is in accordance with 2.1.

2.3 Receiving System

A receiving system shall be in conformance with this International Standard if it is able to handle an ODC according to 2.1.

2.4 Compatibility statement

A claim of conformance by a generating or receiving system with this International Standard shall include a statement listing any other ECMA or International Optical Disk Cartridge standard(s) supported by the system for which conformance is claimed. This statement shall specify the number of the standard(s), including, where appropriate, the ODC Type(s), or the Types of side, and whether support includes reading only or both reading and writing.

3 Normative references

The following normative documents contain provisions which, through reference in this text, constitute provisions of this International Standard. For dated references, subsequent amendments to, or revisions of, any of these publications do not apply. However, parties to agreements based on this International Standard are encouraged to investigate the possibility of applying the most recent editions of the normative documents indicated below. For undated references, the latest edition of the normative document referred to applies. Members of ISO and IEC maintain registers of currently valid International Standards.

ISO/IEC 646:1991 *Information technology — ISO 7-bit coded character set for information interchange*

IEC 60950-1:2001 *Information technology equipment — Safety — Part 1: General requirements*

4 Terms and definitions

For the purpose of this International Standard, the following terms and definitions apply.

4.1 case: The housing for an optical disk, that protects the disk and facilitates disk interchange.

4.2 Clamping Reference Area: The area of the Clamping Zone used to define the Disk Reference Plane.

© ISO/IEC 2001 – All rights reserved

Copyright International Organization for Standardization
Provided by IHS under license with ISO
No reproduction or networking permitted without license from IHS
Not for Resale

4.3 **Clamping Zone:** The area of the disk within which the clamping force is applied by the clamping device.

4.4 **Cyclic Redundancy Check (CRC**): A method for detecting errors in data.

4.5 **Data Zone:** An annular area within the user zone on the disk having a constant data clock frequency.

4.6 **defect management:** A method for handling defective areas on the disk.

4.7 **Disk Reference Plane:** A plane defined by the perfectly flat annular surface of an ideal spindle onto which the Clamping Reference Area of the disk is clamped, and which is normal to the axis of rotation.

4.8 **entrance surface:** The surface of the disk on to which the optical beam first impinges.

4.9 **Error Correction Code (ECC):** An error-detecting code designed to correct certain kinds of errors in data.

4.10 **format:** The arrangement or layout of information on the disk.

4.11 **hub:** The central feature on the disk which interacts with the spindle of the disk drive to provide radial centring and the clamping force.

4.12 **interleaving:** The process of allocating the physical sequence of units of data so as to render the data more immune to burst errors.

4.13 **Logical Sector:** The minimum addressable user data block.

4.14 **Logical Block Address:** The address of a block of data.

4.15 **mark:** A feature of the recording layer, which may take the form of a pit, or any other type or form that can be sensed by the optical system. The pattern of marks represents the data on the disk.

4.16 **mark edge:** The transition between a region with a mark and one without a mark or vice versa, along the track.

4.17 **mark edge recording:** A recording method that uses a mark edge to represent a Channel bit.

4.18 **optical disk:** A disk that will accept and retain information in the form of marks in a recording layer that can be read with an optical beam.

4.19 **optical disk cartridge (ODC):** A device consisting of a case containing an optical disk.

4.20 **polarization:** The direction of polarization of an optical beam is the direction of the electric vector of the beam.

4.21 **prerecorded mark:** A mark written on the recording layer during manufacturing of the disk.

4.22 **read power:** The read power is the optical power, incident at the entrance surface of the disk, used when reading.

4.23 **recording layer:** A layer of the disk on, or in, which data is written during manufacture and/or use.

4.24 **Reed-Solomon code:** An error detection and/or correction code that is particularly suited to the correction of errors that occur in bursts or are strongly correlated.

4.25 **space:** The area between marks along the track.

4.26 **spindle:** The part of the disk drive which contacts the disk and/or hub.

4.27 **substrate:** A transparent layer of the disk, provided for mechanical support of the recording layer, through which the optical beam accesses the recording layer.

4.28 **track:** The path which is followed by the focus of the optical beam during one revolution of the disk.

4.29 **track pitch:** The distance between the centrelines of adjacent tracks, measured in a radial direction.

4.30 **write-inhibit hole:** A hole in the case which, when detected by the drive to be open, inhibits write operation.

5 Conventions and notations

5.1 Representation of numbers

– A measured value is rounded off to the least significant digit of the corresponding specified value. It implies that a specified value of 1,26 with a positive tolerance of +0,01, and a negative tolerance of -0,02 allows a range of measured values from 1,235 to 1,275.

– Letters and digits in parentheses represent numbers in hexadecimal notation.

– The setting of a bit is denoted by ZERO or ONE.

– Numbers in binary notation and bit combinations are represented by strings of digits 0 and 1.

– Numbers in binary notation and bit combinations are shown with the most significant bit to the left.

© ISO/IEC 2001 – All rights reserved
Copyright International Organization for Standardization
Provided by IHS under license with ISO
No reproduction or networking permitted without license from IHS
Not for Resale

– Negative values of numbers in binary notation are given in TWO's complement.

– In each field the data is recorded so that the most significant byte (byte 0) is recorded first. Within each byte the least significant bit is numbered 0 and is recorded last, the most significant bit (numbered 7 in an 8-bit byte) is recorded first. This order of recording applies also to the data input of the Error Detection and Correction circuits and their output.

5.2 Names

The names of entities, e.g. specific tracks, fields, etc., are given with a capital initial.

6 List of acronyms

COF	Creeping One of Four (code)
CRC	Cyclic Redundancy Code
DCb	Data Channel bit
ECC	Error Correction Code
EDAC	Error Detection And Correction
FWHM	Full Width Half Maximum
IR	Internal Radius
QWT	Quadrature Wobble Tracking (mark)
LBA	Logical Block Address
lsb	least significant bit
LSB	Least Significant Byte
MR	Middle Radius
msb	most significant bit
MSB	Most Significant Byte
NSB	Next Significant Byte
ODC	Optical Disk Cartridge
OR	Outside Radius
PBA	Physical Block Address
PLL	Phase–Locked Loop
RFO	Read Focus Optimization
RLL	Run Length Limited (code)
R-S	Reed-Solomon (code)
SCb	Servo Channel bit
SDI	Specific Disk Information
SISIC	Selective Inter Symbol Interference Cancellation
WORM	Write Once Read Multiple

7 General description of the optical disk cartridge

The optical disk cartridge which is the subject of this International Standard consists of a case containing an optical disk.

The case is a protective enclosure for the disk. It has access windows covered by shutters. The windows are automatically uncovered by the drive when the cartridge is inserted into it.

The optical disk consists of two sides assembled together with their recording layers on the inside.

The optical disk is recordable on both sides. Data is written onto the disk with a focused optical beam as marks in the recording layer using irreversible effects, such that the marks cannot be erased or transformed back into an unrecorded state. The marks can be formed by either a phase transformation process, an alloy mode, or any other irreversible process yielding the recording characteristics specified in section 5. The data are read by detecting the intensity modulation of the reflected beam caused by the difference of reflectivity and diffraction of the recorded marks and the unrecorded regions. The beam accesses the recording layer through the transparent substrate of the disk.

The optical disk cartridge is designed to allow for use in a drive with optical access from both sides simultaneously.

8 General requirements

8.1 Environments

8.1.1 Test environment

The test environment is the environment where the air immediately surrounding the optical disk cartridge has the following properties:

temperature: 23 °C ± 2 °C

© ISO/IEC 2001 – All rights reserved

Copyright International Organization for Standardization
Provided by IHS under license with ISO
No reproduction or networking permitted without license from IHS
Not for Resale

relative humidity: 45 % to 55 %

atmospheric pressure: 60 kPa to 106 kPa

air cleanliness: Class 100 000 (see annex A)

No condensation on or in the optical disk cartridge shall occur. Before testing, the optical disk cartridge shall be conditioned in this environment for 48 h minimum. It is recommended that, before testing, the entrance surface of the disk be cleaned according to the instructions of the manufacturer of the disk.

Unless otherwise stated, all tests and measurements shall be made in this test environment.

8.1.2 Operating environment

This International Standard requires that an optical disk cartridge which meets all requirements of this Standard in the specified test environment provides data interchange over the specified ranges of environmental parameters in the operating environment. (See also annex M).

The operating environment is the environment where the air immediately surrounding the optical disk cartridge has the following properties:

temperature: 5 °C to 55 °C

relative humidity: 3 % to 85 %

absolute humidity: 1 g/m^3 to 30 g/m^3

atmospheric pressure: 60 kPa to 106 kPa

temperature gradient: 10 °C/h max.

relative humidity gradient: 10 %/h max.

air cleanliness: office environment (see M.1)

No condensation on or in the optical disk cartridge shall occur. If an optical disk cartridge has been exposed to conditions outside those specified in this clause, it shall be acclimatized in an allowed operating environment for at least 2 h before use. (See also annex N).

8.1.3 Storage environment

The optical disk cartridge without any protective enclosure shall not be stored in an environment outside the range allowed for storage. The storage environment is defined as an environment where the air immediately surrounding the optical disk cartridge has the following properties:

temperature: -10 °C to 55 °C

relative humidity: 3 % to 90 %

absolute humidity: 1 g/m^3 to 30 g/m^3

atmospheric pressure: 60 kPa to 106 kPa

temperature gradient: 15 °C/h max.

relative humidity gradient: 10 %/h max.

air cleanliness: office environment (see M.1)

No condensation on or in the optical disk cartridge shall occur.

8.1.4 Transportation

This International Standard does not specify requirements for transportation; guidance is given in annex P.

8.2 Temperature shock

The optical disk cartridge shall withstand a temperature shock of up to 20 °C when inserted into, or removed from, the drive.

8.3 Safety requirements

The cartridge shall satisfy the safety requirements of IEC 60950-1, when used in the intended manner or in any foreseeable use in an information processing system.

© ISO/IEC 2001 – All rights reserved
Copyright International Organization for Standardization
Provided by IHS under license with ISO
No reproduction or networking permitted without license from IHS
Not for Resale

8.4 Flammability

The cartridge and its components shall be made from materials that comply with the flammability class for HB materials, or better, as specified in IEC 60950-1.

9 Reference Drive

The Reference Drive is a drive several critical components of which have well defined properties and which is used to test the write and read parameters of the disk for conformance to this International Standard. The critical components vary from test to test. This clause gives an outline of all components; components critical for tests in specific clauses are specified in those clauses.

9.1 Optical system

The basic set-up of the optical system of the Reference Drive used for measuring the write and read parameters is shown in figure 1. Different components and locations of components are permitted, provided that the performance remains the same as that of the set-up in figure 1. The optical system shall be such that the detected light reflected from the entrance surface of the disk is minimized so as not to influence the accuracy of the measurements.

9.2 Optical beam

The focused optical beam used for writing and reading data shall have the following properties:

a) Wavelength (λ)	$685\ \text{nm}^{+8\ \text{nm}}_{-8\ \text{nm}}$
b) Wavelength (λ) divided by the numerical aperture of the objective lens (NA)	1,181 μm ± 0,013 μm
c) Filling D/W of the aperture of the objective lens in both tangential and radial direction	1,22 ± 0,15
d) Variance of the wavefront of the optical beam near the recording layer after passing through an ideal substrate (thickness: 1,205, index of refraction: 1,51)	0 to $\lambda^2/180$
e) Polarization	Circular

f) The optical power and pulse width for writing and reading shall be as specified in later clauses.

D is the diameter of the lens aperture and W is the beam diameter of the Gaussian beam where the intensity is $1/e^2$ of the maximum intensity.

9.3 Read Channel

A Read Channel, Channel 1, shall be provided to generate a read-out signal S from the pre-written and user-written marks in the recording layer, using the change in reflectivity and diffraction of the marks.

Signal S which measures the total amount of light reflected by the disk in the exit pupil of the objective lens, is the sum of the currents J_1, J_2, J_3, J_4 of the four-quadrant photodiodes. This signal is not equalized before detection. It shall be low-pass filtered with a 3-pole Butterworth filter with a cut-off frequency of one half the Channel clock frequency.

9.4 Tracking

Tracking error signals are generated to control the servos for the axial and radial tracking of the focus of the optical beam.

The axial tracking error signal Sa is derived in Channel 2 from the measurement of amplitudes of the four-quadrant photodiode currents when the light spot scans a dedicated area of the disk, as specified in 19.2.4.1.

The radial tracking error signal Sr is derived from the measurement of amplitudes of the read out signal S in Channel 1 at the centres of the tracking marks, as specified in 19.2.4.2.

The requirement for the accuracy with which the focus of the optical beam must follow the tracks is specified in 19.2.4.3.

9.5 Rotation of the disk

The spindle shall position the disk as specified in 12.4. It shall rotate the disk at 16,67 Hz ± 0,20 Hz. The direction of rotation shall be clockwise on side A and counterclockwise on side B, when viewed from the disk entrance surface of the disk of this side.

© ISO/IEC 2001 – All rights reserved

Copyright International Organization for Standardization
Provided by IHS under license with ISO
No reproduction or networking permitted without license from IHS
Not for Resale

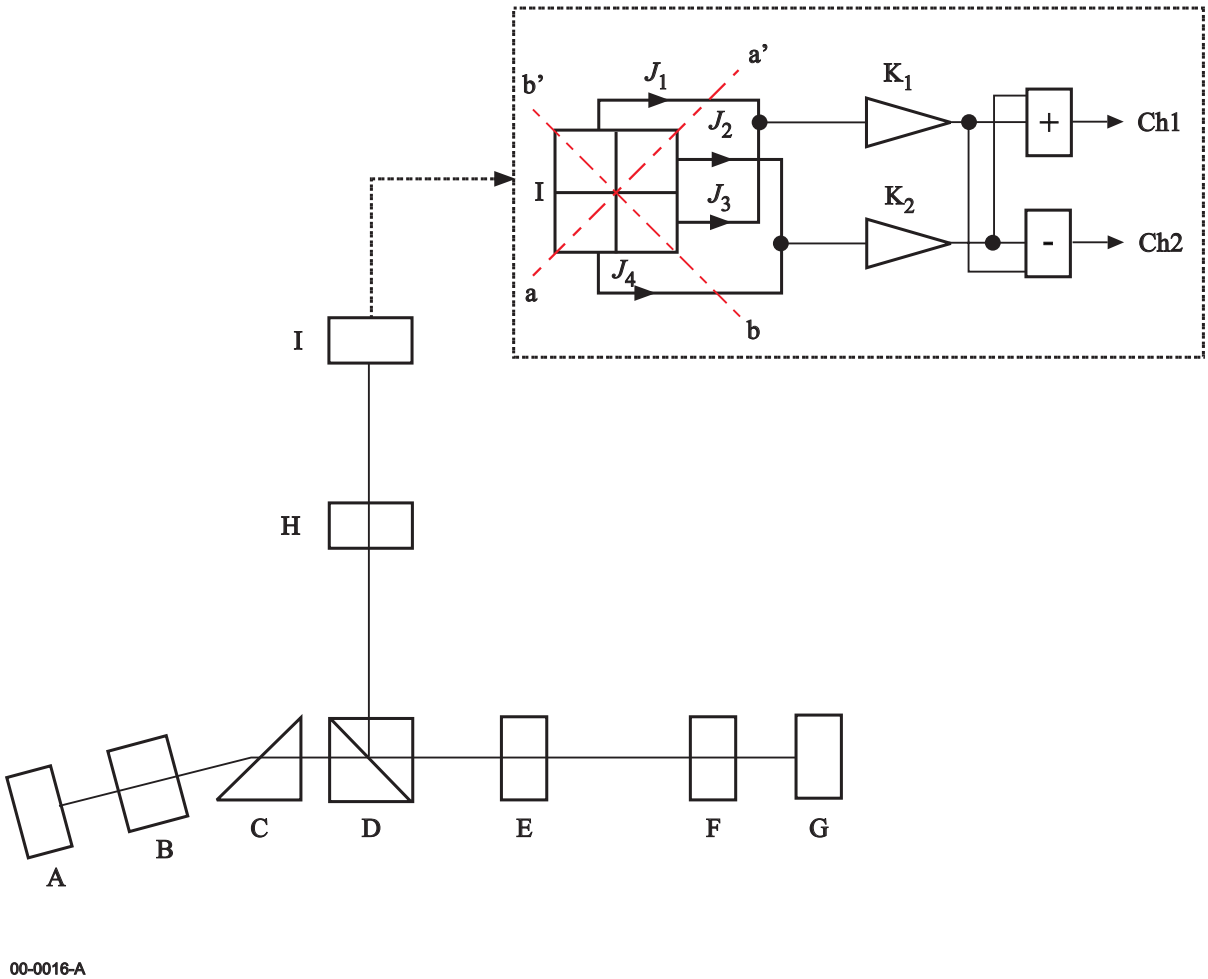

A	Laser diode	H	Astigmatic lens
B	Collimator lens	I	Four-quadrant photodiode
C	Optional shaping prism	J_1, J_2, J_3, J_4	Currents of four-quadrant photodiode
D	Polarizing beam splitter	K_1, K_2	D.C.-coupled amplifiers
E	Optional quarter-wave plate	Ch1	Channel 1: Read out channel
F	Objective lens	Ch2	Channel 2: Axial tracking error channel
G	Optical disk	aa', bb'	Astigmatic focus line directions

Figure 1 — Optical system of the Reference Drive

© ISO/IEC 2001 – All rights reserved
Copyright International Organization for Standardization
Provided by IHS under license with ISO
No reproduction or networking permitted without license from IHS
Not for Resale

Section 2 — Mechanical and physical characteristics

10 Dimensional and physical characteristics of the case

10.1 General description of the case

The case (see figure 2) is a rigid protective container of rectangular shape. It allows the spindle of the drive to clamp the disk by its hub and have a head window on both sides.

Shutters uncover the windows upon insertion into the drive, and automatically cover them upon removal from the drive. The case has write-inhibit, Side A / B detection features, and gripper slots and notches for an autochanger.

10.2 Relationship of Sides A and B

The features essential for physical interchangeability are represented in figure 2. When Side A of the cartridge faces upwards, Side B of the disk faces downwards. Sides A and B of the case are identical as far as a group of features are concerned. For this group, the description is given for one side only (references to Sides A and B can be changed to B or A, respectively).

Only the side identification features, the write inhibit feature and the bar code area, described in 10.5.3, 10.5.4, 10.5.7 and 10.5.12, respectively, are not identical for both sides of the case.

10.3 Reference axes of the case

There are three orthogonal reference axes X,Y,Z defining three references planes XY, XZ, YZ to which the dimensions of the case are referred.

The positions of these reference axes are shown on figure 3.

- The Reference Axes X and Y lie in the external plane of side A: Reference Axis X is located between the centres of the two locator slots of the case and Reference Axis Y is perpendicular to Reference Axis X at the middle of the bottom of the case.
- The Reference Axis Z is perpendicular to the Reference Axes X and Y at their crossing point.

10.4 Case drawings

The case is represented schematically by the following drawings.

- Figure 2 shows a composite drawing of Side A of the case in isometric form, with the major features identified from Side A.
- Figure 3 shows the envelope of the case with Reference Axes X, Y and Z.
- Figures 4a, 4b show the Side A / B indicator holes and labels.
- Figure 5 shows the details of the insertion slots and detents.
- Figure 6 shows the gripper slots and notches, used for automatic handling.
- Figure 7 shows the write-inhibit hole.
- Figure 8 shows the hub aperture and head window.
- Figure 9 shows the shutter opening features.
- Figures 10a, 10b show the user label areas.
- Figure 11 shows the bar code area.
- Figures 12a, 12b, 12c show the hub/disk structure and dimensions.
- Figure 13 shows the capture cylinder.

10.5 Dimensions of the case

The dimensions of the case shall be measured in the test environment. The dimensions of the case in an operating environment can be estimated from the dimensions specified in this clause.

10.5.1 Overall dimensions

The total length of the case (see figure 3) shall be

$$L_1 = 340{,}0 \text{ mm} \pm 0{,}4 \text{ mm}$$

The distance from the top of the case to the reference axis X shall be

$$L_2 = 60{,}0 \text{ mm} \pm 0{,}2 \text{ mm}$$

The distance from the bottom of the case to the reference axis X shall be

$$L_3 = 280{,}0 \text{ mm} \pm 0{,}2 \text{ mm}$$

© ISO/IEC 2001 – All rights reserved

Copyright International Organization for Standardization
Provided by IHS under license with ISO
No reproduction or networking permitted without license from IHS
Not for Resale

The total width of the case shall be

$L_4 = 320{,}0 \text{ mm} \pm 0{,}4 \text{ mm}$

The width shall be linearly reduced on top and bottom, on right and left side, by a maximum length

$L_5 = 8{,}0 \text{ mm} \pm 0{,}2 \text{ mm}$

originating from a point defined by a distance from top or bottom

$L_6 = 20{,}0 \text{ mm} \pm 0{,}2 \text{ mm}$

The four corners of the case shall be rounded with a radius

$R_1 = 5{,}0 \text{ mm} \pm 0{,}2 \text{ mm}$

The total thickness of the case shall be

$L_7 = 16{,}0 \text{ mm} \pm 0{,}1 \text{ mm}$

The thickness shall be linearly reduced on the two long edges on each side by a maximum length

$L_8 = 1{,}5 \text{ mm} \pm 0{,}2 \text{ mm}$

originating from a line defined by a distance from edges

$L_9 = 10{,}0 \text{ mm} \pm 0{,}3 \text{ mm}$

10.5.2 Locator slots

The case shall have two locator slots positioned on the long edges of the case (see figure 3).

These locator slots shall have a circular section connected to a V-shaped ramp.

The centres of the circular sections shall be on the Reference Axis X at distances

$L_{10} = 154{,}10 \text{ mm} \pm 0{,}15 \text{ mm}$

from Axis Y. Their radii shall be

$R_2 = 4{,}2 \text{ mm} \pm 0{,}2 \text{ mm}$

The V-shaped ramp shall start on the long edges at a point specified by a distance

$L_{11} = 54{,}0 \text{ mm} \pm 0{,}2 \text{ mm}$

from the top of the case and shall be connected to the circular section by a straight line making an angle

$\alpha_1 = 45\,° \pm 1\,°$

with the edges of the case.

10.5.3 Side A / B indicator holes

The case shall have two side A / B indicator holes going all through the case (see figures 4a and 4b)

– The first side indicator hole shall have a diameter

  $D_1 = 5{,}0 \text{ mm} \pm 0{,}2 \text{ mm}$

  Its centre shall be specified on side A (see figure 4a) by

  $L_{12} = 147{,}0 \text{ mm} \pm 0{,}2 \text{ mm}$

  $L_{13} = 180{,}0 \text{ mm} \pm 0{,}2 \text{ mm}$

– The second side indicator hole shall be rectangular with rounded corners and specified by the following dimensions on side A (see figure 4a)

  $L_{14} = 104{,}0 \text{ mm} \pm 0{,}2 \text{ mm}$

  $L_{15} = 116{,}0 \text{ mm} \pm 0{,}2 \text{ mm}$

  $L_{16} = 248{,}8 \text{ mm} \pm 0{,}3 \text{ mm}$

© ISO/IEC 2001 – All rights reserved
Copyright International Organization for Standardization
Provided by IHS under license with ISO
No reproduction or networking permitted without license from IHS
Not for Resale

L_{17} = 261,2 mm ± 0,3 mm

R_3 = 0,2 mm ± 0,2 mm

10.5.4 Side A / B indicator labels

The case shall have one Side A / B indicator label on each side (see figures 4a and 4b).

These labels shall have the minimum dimensions of 10,0 mm x 32,0 mm and shall be recessed by 0,2 mm min.

Their positions are specified by the following dimensions and relations between dimensions.

Side A label (see figure 4a):

L_{18} = 130,0 mm min.

L_{19} - L_{18} = 10,0 mm min.

L_{20} = 49,0 mm min.

L_{21} - L_{20} = 32,0 mm min.

Side B label (see figure 4b):

L_{22} = 130,0 mm min.

L_{23} - L_{22} = 10,0 mm min.

L_{24} = 49,0 mm min.

L_{25} - L_{24} = 32,0 mm min.

10.5.5 Insertion slots and detent features

The case shall have two insertion slots located on top of the long edges (see figure 5).

The slots shall have a length of

L_{26} = 88,5 mm ± 0,2 mm

a width of

L_{27} = 7,0 mm ± 0,2 mm

with a leading ramp making an angle

α_2 = 8,5 ° ± 1,0 °

with the long edges, on a length

L_{28} = 18,0 mm ± 1,0 mm

The slots shall have a depth

L_{29} = 8,0 mm ± 0,2 mm

located

L_{30} = 3,5 mm ± 0,2 mm

from the XY plane.

Detent notches shall be located at top and bottom of the long edges. Their structure shall be symmetrical versus an axis parallel to Axis Y, located between and at equal distance of the two sides of the case.

The detent notches shall be located at distances

L_{31} = 20,0 mm ± 0,2 mm

from top or bottom, starting with a rectangular shape with a depth

L_{32} = 4,00 mm ± 0,15 mm

--`,,```,,,,````-`-`,,`,,`,`,,`---

© ISO/IEC 2001 – All rights reserved

Copyright International Organization for Standardization
Provided by IHS under license with ISO
No reproduction or networking permitted without license from IHS
Not for Resale

a length

L_{33} = 10,0 mm ± 0,2 mm

and finishing by a ramp making an angle

$\alpha_3 = 30\ ° \pm 1\ °$

with the long edges of the case

Their heights shall be

L_{34} = 11,5 mm ± 0,2 mm

10.5.6 Gripper slots and gripper notches

The case shall have two gripper slots and four gripper notches (see figure 6).

Two rectangular gripper slots shall be located symmetrically versus Axis Y on the long edges of the case. They shall have a depth of

L_{35} = 8,0 mm ± 0,2 mm

from the edges of the case and a width

L_{36} = 5,0 mm ± 0,2 mm

Their upper edge positions shall be

L_{37} = 205,0 mm ± 0,2 mm

The corners of these slots on the long edges of the case shall be rounded with a radius

R_4 = 2,0 mm ± 0,2 mm

Two gripper notches shall be located symmetrically versus Axis Y on the top of the case. The positions of their centres shall be specified by

L_{38} = 35,0 mm ± 0,2 mm

L_{39} = 110,0 mm ± 0,2 mm

Their width shall be

L_{40} = 12,0 mm ± 0,2 mm

They shall have a cylindrical cross-section defined by a cylinder with an axis parallel to Axis X, positioned in a point O located outside the case and defined by L_{38} and

L_{41} = 2,0 mm ± 0,2 mm

and a radius

R_5 = 6,0 mm ± 0,2 mm

Two rectangular gripper notches shall be located symmetrically versus Axis Y on the bottom of the case. The positions of their centres shall be specified by

L_{42} = 85,0 mm ± 0,2 mm

L_{43} = 266,0 mm ± 0,2 mm

Their width shall be

L_{44} = 12,0 mm ± 0,2 mm

and their length

L_{45} = 10,0 mm ± 0,2 mm

Their depth profiles shall be defined by the following dimensions

L_{46} = 6,5 mm ± 0,2 mm

--`,,```,,,,````-`-`,,`,,`,`,,`---

© ISO/IEC 2001 – All rights reserved

Copyright International Organization for Standardization
Provided by IHS under license with ISO
No reproduction or networking permitted without license from IHS

Not for Resale

L_{47} = 2,5 mm ± 0,2 mm

L_{48} = 9,0 mm ± 0,2 mm

L_{49} = 3,0 mm ± 0,2 mm

10.5.7 Write-inhibit hole

The case shall have a (one) common write-inhibit hole for both sides A and B (see figure 7). The case shall include a device for opening and closing the hole. The opened condition of the opening through the case shall define the write-enabled condition; the closed condition of the opening shall define the write-inhibited condition.

The write-inhibit hole shall have a diameter

D_2 = 5,0 mm ± 0,2 mm

Its centre shall be specified by

L_{50} = 147,0 mm ± 0,2 mm

L_{51} = 60,0 mm ± 0,2 mm

on side A of the case.

10.5.8 Hub aperture and head window

The case shall have a circular aperture on each side for the hub of the disk (see figure 8).

Its position and diameter shall be specified by the following dimensions

L_{52} = 120,0 mm ± 0,2 mm

D_3 = 194,0 mm ± 0,2 mm

The relative positioning of hub, aperture and case walls is defined in 11.3.1.

The case shall have a rectangular window on each side to enable the optical head to access the disk (see figure 8) specified by the following dimensions.

L_{53} = 25,85 mm min.

L_{54} = 60,2 mm min.

L_{55} = 57,2 mm min.

10.5.9 Shutters

The case shall have a spring-loaded, unidirectional shutter for each side, designed to completely cover the head window when closed. The shutter shall be free to slide in a recessed area within the case without protrusion outside of the case.

10.5.10 Shutter opener features

The case shall have two shutter opener features, one for each shutter (see figure 9).

The shutter opener feature of one side shutter shall be within the left insertion slot, seen from this side.

The movement of the shutter shall be controlled with the movement of the movable piece in the insertion slot.

When the shutter is closed the movable piece edge used to push the shutter open shall be at a position

L_{56} = 32,5 mm ± 0,2 mm

The width of this edge shall be

L_{57} = 2,5 mm min.

The path of the movable edge shall be at a distance from the corresponding case side surface

L_{58} = 5,2 mm ± 0,2 mm

A movement of the edge to

L_{59} = 22 mm max.

-`,,```,,,,````-`-`,,`,,`,`,,`---

© ISO/IEC 2001 – All rights reserved

Copyright International Organization for Standardization
Provided by IHS under license with ISO
No reproduction or networking permitted without license from IHS
Not for Resale

shall be sufficient to ensure that the head window is opened to the minimum size specified in 10.5.8.

The available length of the edge in the insertion slot shall be

L_{60} = 5 mm min. and 6,5 mm max.

10.5.11 User label areas

The case shall have the following minimum areas for user labels:

on side A and side B: 60,0 mm x 208,0 mm (see figure 10a),

on the bottom side: 146,0 mm x 11,0 mm (see figure 10b).

These areas shall be recessed by 0,2 mm min. Their positions shall be specified by the following dimensions and relations between dimensions

L_{61} = 190,0 mm min.

L_{62} - L_{61} = 60,0 mm min.

L_{63} + L_{64} = 208,0 mm min.

L_{65} + L_{66} = 146,0 mm min.

L_{67} = 11,0 mm min.

10.5.12 Bar code area

The case shall have an area for bar code on side A (see figure 11).

This area shall be recessed by 0,2 mm min. Its position shall be specified by the following dimensions

L_{68} = 130,0 mm ± 0,2 mm

L_{69} = 140,0 mm ± 0,2 mm

L_{70} = 49,0 mm ± 0,2 mm

L_{71} = 81,0 mm ± 0,2 mm

10.6 Mechanical characteristics

All requirements of this clause shall be met in the operating environment.

10.6.1 Materials

The case shall be constructed from any suitable materials such that it meets the requirements of this International Standard.

10.6.2 Mass

The mass of the case without the optical disk shall not exceed 800 g.

10.6.3 Edge distortion

The cartridge shall meet the requirement of the edge distortion test defined in annex B.

10.6.4 Compliance

The cartridge shall meet the requirement of the compliance (flexibility) test defined in annex C. The requirement guarantees that a cartridge can be constrained in the proper operation position within the drive.

10.6.5 Shutter opening force

The spring force on the shutter shall be such that the force required to open the shutter does not exceed 10 N.

It shall be sufficiently strong to close a free-sliding shutter, irrespective of the orientation of the case.

10.7 Drop test

The optical disk cartridge shall withstand dropping on each surface and on each corner from a height of 760 mm on to a concrete floor covered with a vinyl layer 2 mm thick. The cartridge shall withstand all such impacts without any functional failure.

--`,,```,,,,````-`-`,,`,,`,`,,`---
© ISO/IEC 2001 – All rights reserved
Copyright International Organization for Standardization
Provided by IHS under license with ISO
No reproduction or networking permitted without license from IHS
Not for Resale

11 Dimensional, mechanical and physical characteristics of the disk

11.1 General description of the disk

The disk shall consist of two sides (see figure 12a).

Each disk side A, B, shall consist of a circular substrate with a recording layer coated on one face. The recording layer can be protected from environmental influences by a protective layer. The prerecorded, formatted area (see clause 15) of the substrate shall be transparent to allow an optical beam to focus on the recording layer through the substrate.

The two disk sides shall be assembled with the recording layer facing inwards.

A circular hub is positioned in the centre of the disk. It interacts with the spindle of the drive, and provides the radial centring, the clamping force and torque transmission.

11.2 Reference axis and plane of the disk

Some dimensions of the hub are referred to a Disk Reference Plane P (see figures 12a, 12c). The Disk Reference Plane P is defined by the perfectly flat surface of an ideal spindle onto which the Clamping Reference Area of the disk (located on side B) is clamped, and which is normal to the axis of rotation of this spindle. This axis A passes through the centre of the centre hole of the hub, and is normal to Disk Reference Plane P.

11.3 Dimensions of the disk

The dimensions of the disk shall be measured in the test environment. The dimensions of the disk in an operating environment can be estimated from the dimensions specified in this clause.

The outer diameter of the disk shall be 306,7 mm maximum. The tolerance is determined by the movement of the disk inside the case allowed by 12.3 and 12.4.

The total thickness of the disk outside the hub area shall be 2,7 mm min. and 3,3 mm max.

11.3.1 Hub dimension

The diameter of the centre hole of the hub (see figures 12b, 12c) shall be

$$D_4 = 36{,}65 \text{ mm} \begin{matrix} +0{,}50 \text{ mm} \\ -0{,}50 \text{ mm} \end{matrix}$$

The upper position of the hole, at diameter D_4, shall be at a distance

$$h_1 = 4{,}45 \text{ mm} \pm 0{,}20 \text{ mm}$$

from the Disk Reference Plane P.

The opening profile between this upper position and the external hub surface of side B shall be conical with an angle

$$\alpha_4 = 20\,° \pm 1°.$$

The centring length at diameter D_4 shall be

$$h_2 = 0{,}4 \text{ mm min.}$$

The upper edge of the centring length (connected to the conical opening) shall be rounded off with a radius

$$R_6 = 1{,}0 \text{ mm} \pm 0{,}2 \text{ mm}$$

The opening shall have a diameter larger than, or equal to, D_4 between the centring length and the external surface of side A.

A magnetizable ring, defining the area of the hub where the clamping mechanism of the optical drive grips the disk, shall be positioned on side B of the hub with an inner diameter of

$$D_5 = 48 \text{ mm max.}$$

and an outside diameter of

$$D_6 = 70{,}8 \text{ mm min.}$$

© ISO/IEC 2001 – All rights reserved

Copyright International Organization for Standardization
Provided by IHS under license with ISO
No reproduction or networking permitted without license from IHS
Not for Resale

The position of the top of the magnetizable ring relative to the Disk Reference Plane P shall be

$$h_3 = 0{,}7 \text{ mm} \begin{matrix} +0{,}0 \text{ mm} \\ -0{,}1 \text{ mm} \end{matrix}$$

The Clamping Reference Area, defining the Disk Reference Plane P, shall be constituted of 3 disk-shaped surfaces S_1, S_2, S_3, located on side B of the hub with a diameter

$D_7 = 4$ mm min.

and centres positioned on a circle with a diameter

$D_8 = 90{,}30$ mm ± 0,20 mm

and spaced by an angle

$\alpha_5 = 120\,° \pm 1\,°$

The active recording layers shall be

$L_{72} = 6{,}4$ mm ± 0,4 mm for side B, and

$L_{73} = 9{,}6$ mm ± 0,4 mm for side A.

from the Disk Reference Plane P.

Series of rectangular indents shall be located on side B of the hub between diameters

$D_9 = 73{,}5$ mm ± 0,3 mm

and

$D_{10} = 85{,}5$ mm ± 0,3 mm

The centres of the indents shall be spaced by

$\alpha_6 = 12\,° \pm 1\,°$

They shall have a depth of

$h_4 = 4{,}10$ mm ± 0,20 mm

a length of

$L_{74} = 6{,}67$ mm ± 0,20 mm

and rounded corners with a radius

$R_7 = 1{,}6$ mm max.

The separating walls of the indents shall have leading edges with an angle

$\alpha_7 = 45{,}5\,° \pm 0{,}5\,°$

The outer diameter of the hub shall be

$$D_{11} = 100{,}0 \text{ mm} \begin{matrix} +0{,}2 \text{ mm} \\ -0{,}2 \text{ mm} \end{matrix}$$

and shall have lips on each side A and B used to cover the cartridge wall and close the cartridge hub aperture (see annex C).

These lips shall have profiles defined by the following dimensions

$L_{75} = 5{,}0$ mm ± 0,2 mm

$L_{76} = 2{,}5$ mm ± 0,1 mm

$h_5 = 2{,}05$ mm ± 0,10 mm

$h_6 = 0{,}2$ mm ± 0,1 mm

$h_7 = 0{,}6$ mm ± 0,1 mm

© ISO/IEC 2001 – All rights reserved
Copyright International Organization for Standardization
Provided by IHS under license with ISO
No reproduction or networking permitted without license from IHS
Not for Resale

h_8 = 14,9 mm ± 0,1 mm

h_9 = 12,25 mm ± 0,10 mm

The hub on side A shall not extend outside of the cylinder defined by D_{11} and h_8.

11.4 Mechanical characteristics

All requirements in this clause must be met in the operating environment.

11.4.1 Material

The disk shall be made from any suitable materials such that it meets the requirements of this Standard. The only material properties specified by this International Standard are the magnetic properties of the magnetizable zone in the hub (see 12.2 and annex D) and the optical properties of the substrate in the formatted area (see 11.5).

11.4.2 Mass

The mass of the disk shall not exceed 0,6 kg.

11.4.3 Moment of inertia

The moment of inertia of the disk relative to axis A shall not exceed 8 g·m^2.

11.4.4 Imbalance

The imbalance of the disk relative to axis A shall not exceed 0,1 g·m.

11.4.5 Axial deflection

The axial deflection of the disk is measured as the axial deviation of the recording layer, as seen from the optical head of the Reference Drive (see clause 9). Thus it comprises the tolerances on the thickness of the substrate, on its index of refraction and the deviation of the entrance surface from the Disk Reference Plane. The nominal position of the recording layer of each disk side with respect to the Disk Reference Plane is determined by the nominal position of the entrance surface of this side with respect to the Reference Plane and by the nominal thickness of the substrate.

The deviation of any point of the recording layer from its nominal position, in a direction normal to the Disk Reference Plane P, shall not exceed 200 μm for rotational frequencies of the disk as specified in 9.5.

11.4.6 Axial acceleration

The maximum allowed axial error e_{max} (see annex Q) shall not exceed 0,50 μm, measured using the Reference Servo for axial tracking of the recording layer. The rotational frequency of the disk shall be as specified in 9.5. The stationary part of the motor is assumed to be motionless (no external disturbances). The measurement shall be made using a servo with the transfer function

$$H_S(i\omega) = \frac{1}{3}\left(\frac{\omega_0}{i\omega}\right)^2 \frac{1+\dfrac{3i\omega}{\omega_0}}{1+\dfrac{i\omega}{3\omega_0}}$$

where

$\omega = 2\pi f$

$\omega_0/2\pi$ = 1 115 Hz

$i = \sqrt{-1}$

or any other servo with $|1+H|$ within 20% of $|1+H_S|$ in the bandwidth of 16 Hz to 16 kHz. Thus, the disk shall not require an acceleration of more than 8,2 m/s^2 at low frequencies from the servo motor of the Reference Servo.

11.4.7 Radial runout

The radial runout of the tracks in the recording layer in the Information zone is measured as seen by the optical head of the Reference Drive (see clause 9). Thus it includes the distance between the axis of rotation of the spindle and reference axis A, the tolerances on the dimensions between axis A and the location of the track, and effects of non-uniformity's in the index of refraction.

--`,,```,,,,````-`-`,,`,,`,`,,`---

© ISO/IEC 2001 – All rights reserved

Copyright International Organization for Standardization
Provided by IHS under license with ISO
No reproduction or networking permitted without license from IHS
Not for Resale

The difference between the maximum and the minimum distance of any track from the axis of rotation, measured along a fixed radial line over one physical track of the disk, shall not exceed 100 μm as measured by the optical system under conditions of a hub mounted on a perfect sized test fixture shaft, for rotational frequencies of the disk as specified in 9.5.

11.4.8 Radial acceleration

The maximum allowed radial error e_{max} (see annex Q) shall not exceed 0,08 μm, measured using the Reference Servo for radial tracking of the tracks. The rotational frequency of the disk shall be as specified in 9.5. The stationary part of the motor is assumed to be motionless (no external disturbances). The measurement shall be made using a servo with the transfer function

$$H_s(i\omega) = \frac{1}{3}\left(\frac{\omega_0}{i\omega}\right)^2 \frac{1+\frac{3i\omega}{\omega_0}}{1+\frac{i\omega}{3\omega_0}}$$

where

$\omega = 2\pi f$

$\omega_0/2\pi$ = 1 700 Hz

$i = \sqrt{-1}$

or any other servo with $|1+H|$ within 20% of $|1+H_s|$ in the bandwidth of 16 Hz to 16 kHz. Thus, the disk shall not require an acceleration of more than 3 m/s^2 at low frequencies from the servo motor of the Reference Servo.

11.4.9 Tilt

The tilt angle, defined as the angle which the normal to the entrance surface, averaged over a circular area of 1,0 mm diameter, makes with the normal to the Disk Reference Plane P, shall not exceed 2 mrad in radial and tangential directions.

11.5 Optical characteristics

11.5.1 Index of refraction

Within the formatted area (see clause 15) the index of refraction of the substrate shall be within the range 1,49 to 1,53.

11.5.2 Thickness

The thickness of the substrate from the entrance surface to the recording layer shall be within the range 1,180 mm to 1,230 mm.

11.5.3 Birefringence

The birefringence shall not exceed:

– 40 nm, in the User Area (radii 73,70 mm to 141,40 mm),
– 80 nm, in the Lead-in Area (radii 73,00 mm to 73,70 mm) and the Lead-out Area (radii 141,40 mm to 142,10 mm).

11.5.4 Reflectance

11.5.4.1 General

The reflectance R is the value of the reflectance of the User area, measured through the substrate and does not include the reflectance of the entrance surface.

The nominal value R_n of the reflectance, defined as the average for the entire User area, shall be 38 %.

11.5.4.2 Measured value

The measured value R_m of the reflectance shall be measured in the User area under the conditions a) to e) of 9.2.

11.5.4.2 Requirement

At any point in the User area, the reflectance R shall meet the following requirement.

The maximum allowed deviation for R_n, for any disk shall be ± 0,1 R_n.

The maximum allowed circumferential variation for R_m shall be ± 0,05 R_n (for f<100 Hz).

The maximum allowed radial variation for R_m shall be ± 0,05 R_n.

© ISO/IEC 2001 – All rights reserved
Copyright International Organization for Standardization
Provided by IHS under license with ISO
No reproduction or networking permitted without license from IHS
Not for Resale

12 Interface between cartridge and drive

12.1 Clamping method

When the cartridge is inserted into the drive, the shutters of the case are opened and the drive spindle engages the disk on side B. The disk is held against the spindle by an axial clamping force, provided by the magnetizable material in the hub and the magnets in the spindle. The radial positioning of the disk is provided by the centring of the axis of the spindle in the centre hole of the hub. A turntable of the spindle shall support the disk in its clamping zone, determining the axial position of the disk in the case.

12.2 Clamping force

The clamping force exerted by the spindle shall be less than 20 N.

The adsorbent force measured by the test device specified in annex D shall be in the range of 10 N to 12 N.

12.3 Capture cylinder

The capture cylinder (see figure 13) is defined as the volume in which the spindle can expect the centre of the conical opening of the hole of the hub to be at the maximum height of the hub, just prior to capture. The size of the cylinder limits the allowable play of the disk inside its cavity in the case. This cylinder is referred to perfectly located and perfectly sized alignment and location pins in the drive, and includes tolerances of dimensions of the case and the disk between the pins mentioned and the centre of the hub. The bottom of the cylinder is parallel to the Plane Q_b containing the parallel long edges CC', DD' of Side B of the case (see also annex C), and shall be located at a distance of

L_{77} = 4 mm min.

above this Plane. The top of the cylinder shall be located at a distance of

L_{78} = 12 mm max.

above the plane Qb. The diameter of the cylinder shall be

D_{12} = 6 mm max.

Its centre shall be defined on Axis Y by the nominal value of L_{52}.

12.4 Disk position in the operating condition

When the disk is in the operating condition (see figure 13) within the drive, the position of Reference Plane P of the disk shall be

L_{79} = 0,5 mm ± 0,25 mm

above the plane Q_b and the axis of rotation shall be within a circle with a diameter

D_{13} = 0,2 mm max.

and a centre defined on Axis Y by the nominal value of L_{52}.

The torque to be exerted on the disk in order to maintain a rotational frequency of 16,67 Hz shall not exceed 0,01 N·m.

© ISO/IEC 2001 – All rights reserved

Copyright International Organization for Standardization
Provided by IHS under license with ISO
No reproduction or networking permitted without license from IHS
Not for Resale

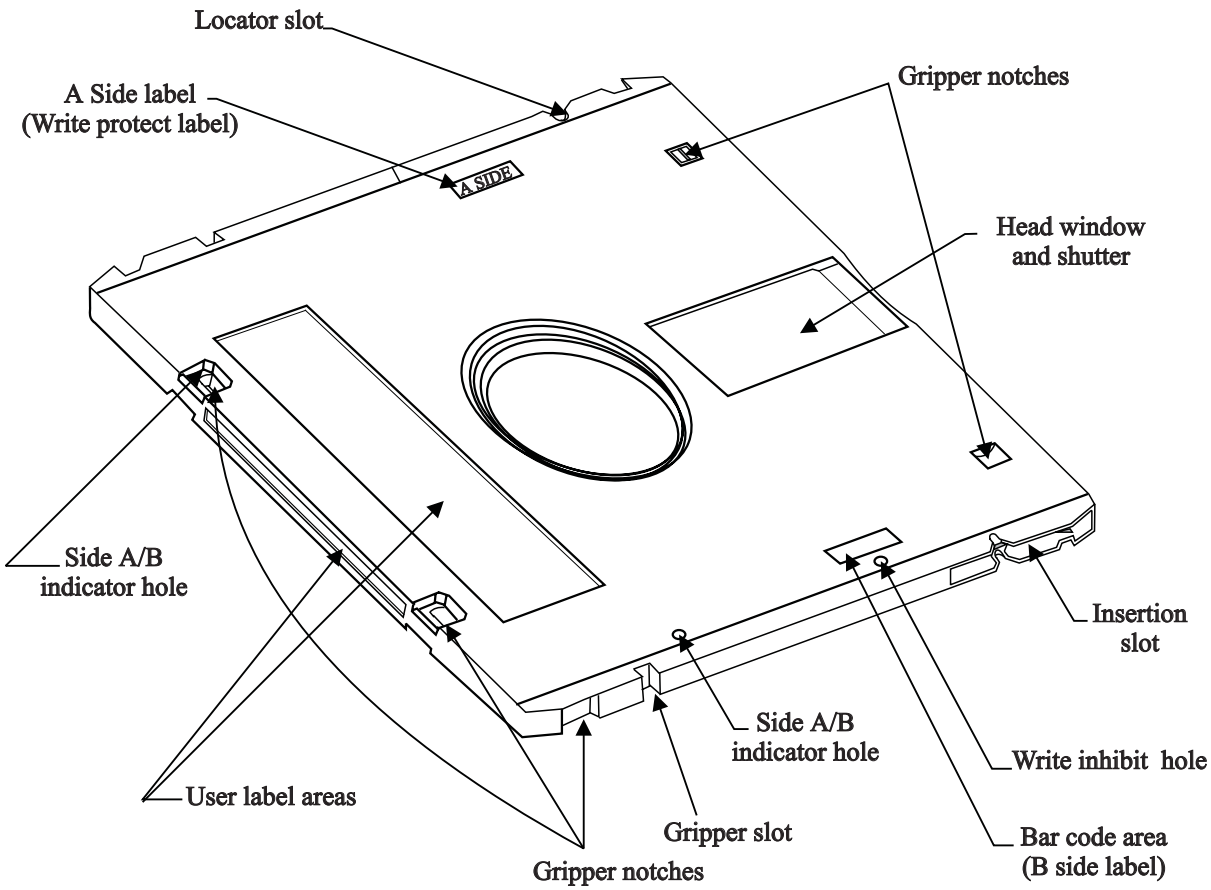

Figure 2 — Case seen from side A

(Different features seen on side B are shown between brackets)

--`,,```,,,,````-`-`,,`,,`,`,,`---

© ISO/IEC 2001 – All rights reserved
Copyright International Organization for Standardization
Provided by IHS under license with ISO
No reproduction or networking permitted without license from IHS
Not for Resale

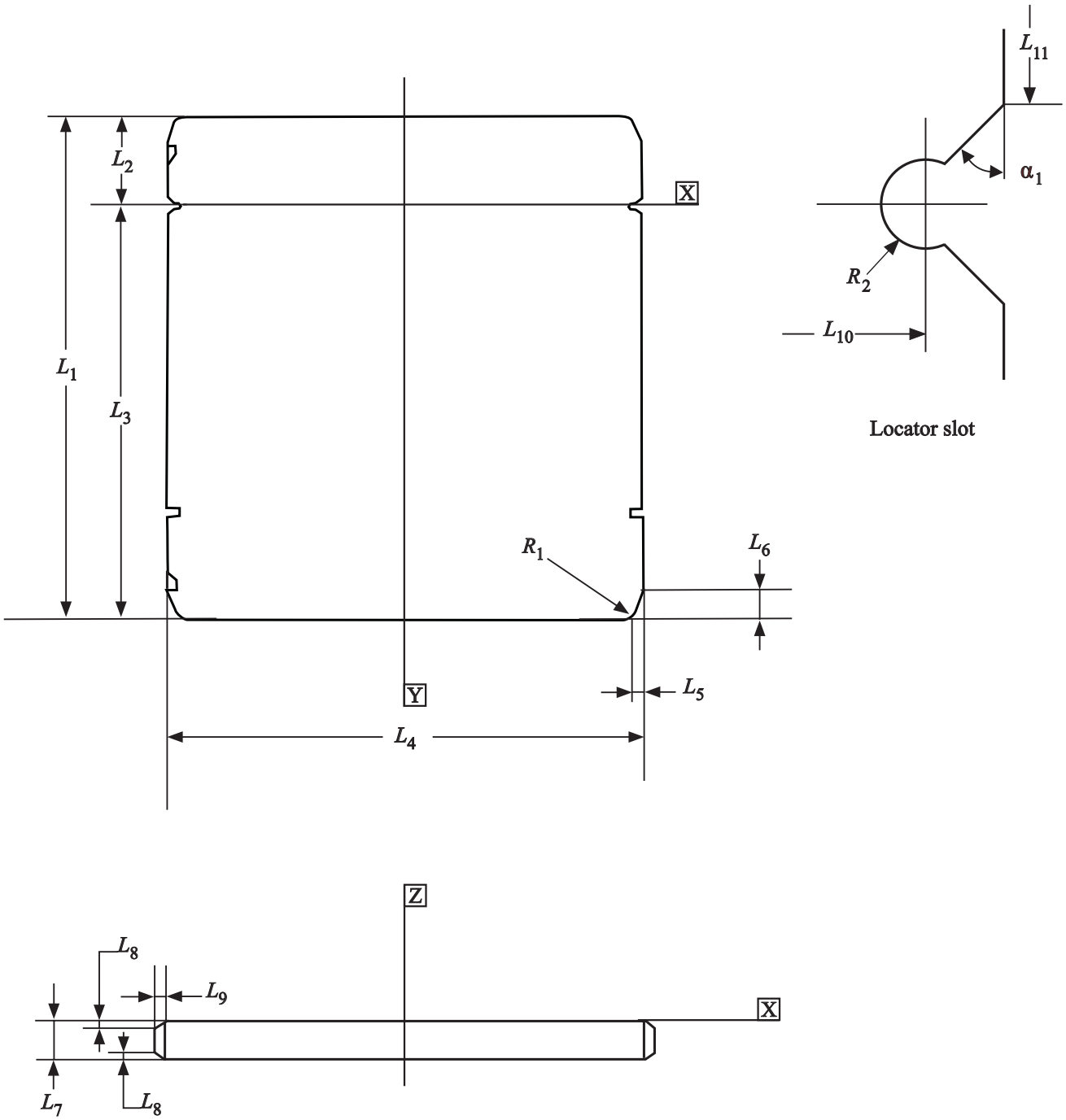

Figure 3 — Overall dimensions, Reference Axes

© ISO/IEC 2001 – All rights reserved

Copyright International Organization for Standardization
Provided by IHS under license with ISO
No reproduction or networking permitted without license from IHS
Not for Resale

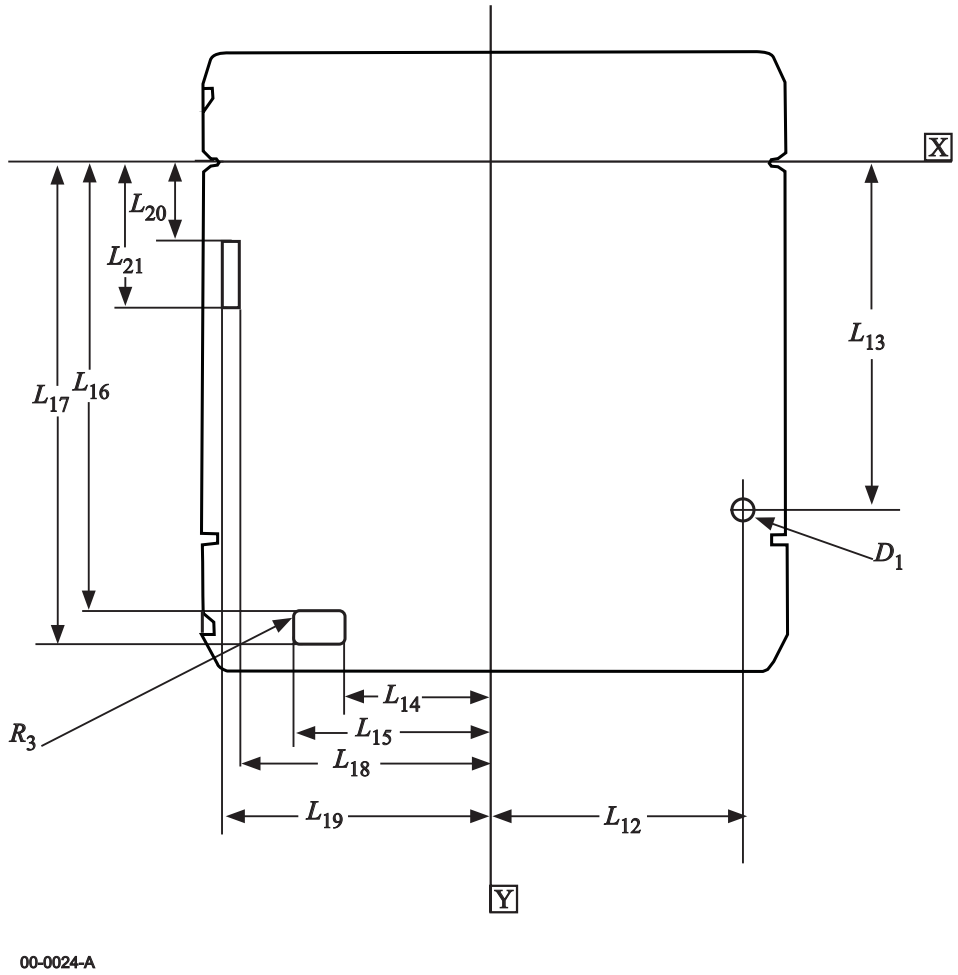

Figure 4 a — Side A / B indicator holes and label on side A

© ISO/IEC 2001 – All rights reserved
Copyright International Organization for Standardization
Provided by IHS under license with ISO
No reproduction or networking permitted without license from IHS
Not for Resale

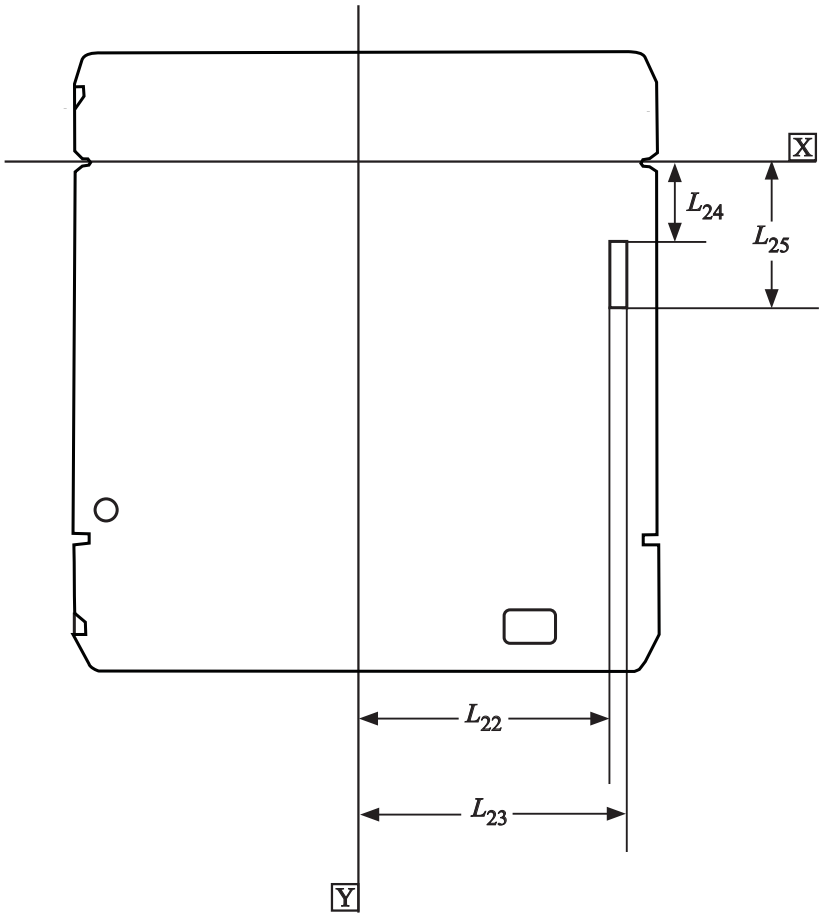

Figure 4 b — Side A / B indicator holes and label on side B

© ISO/IEC 2001 – All rights reserved
Copyright International Organization for Standardization
Provided by IHS under license with ISO
No reproduction or networking permitted without license from IHS
Not for Resale

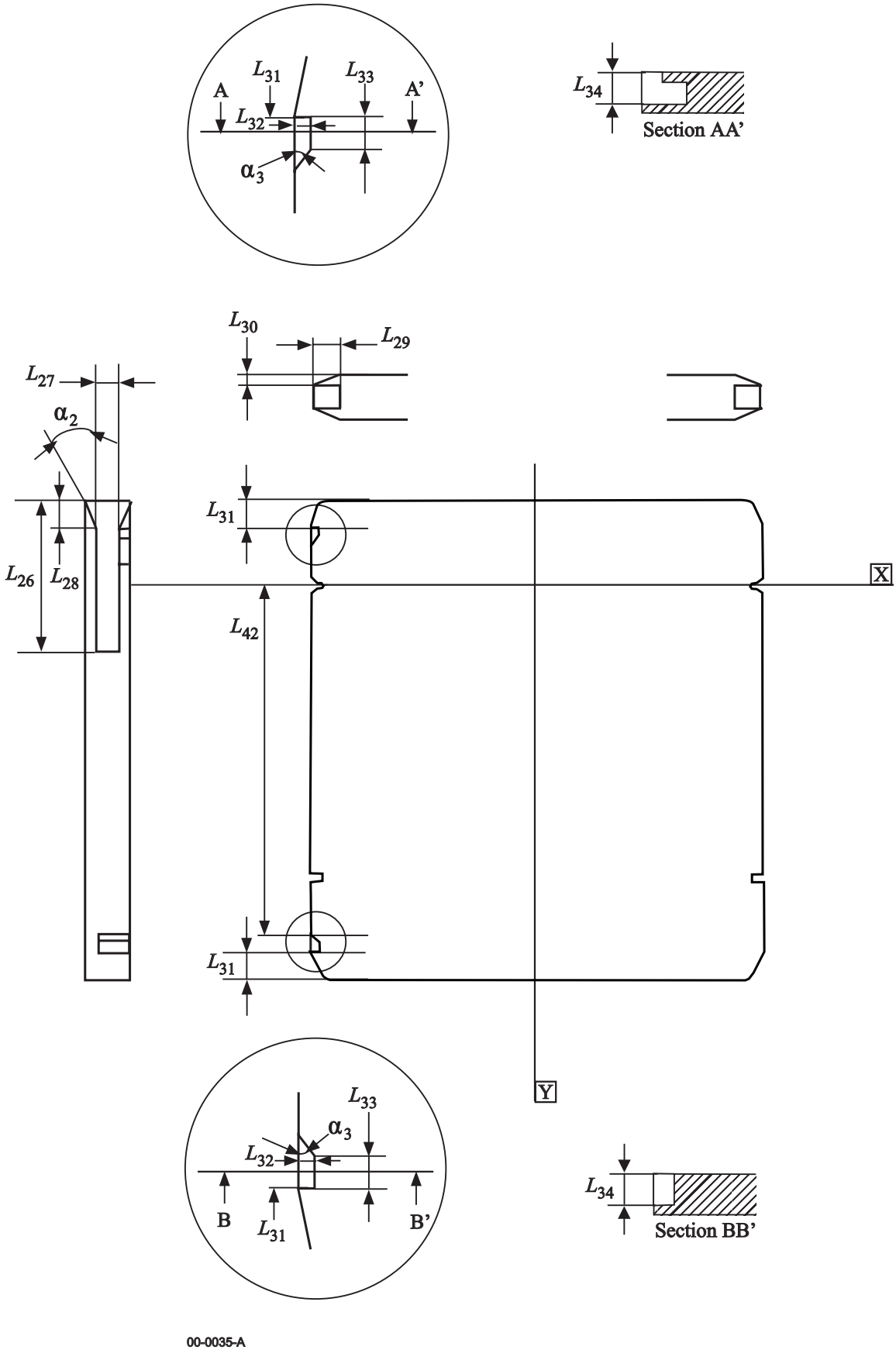

Figure 5 — Insertion slots and detents

© ISO/IEC 2001 – All rights reserved
Copyright International Organization for Standardization
Provided by IHS under license with ISO
No reproduction or networking permitted without license from IHS
Not for Resale

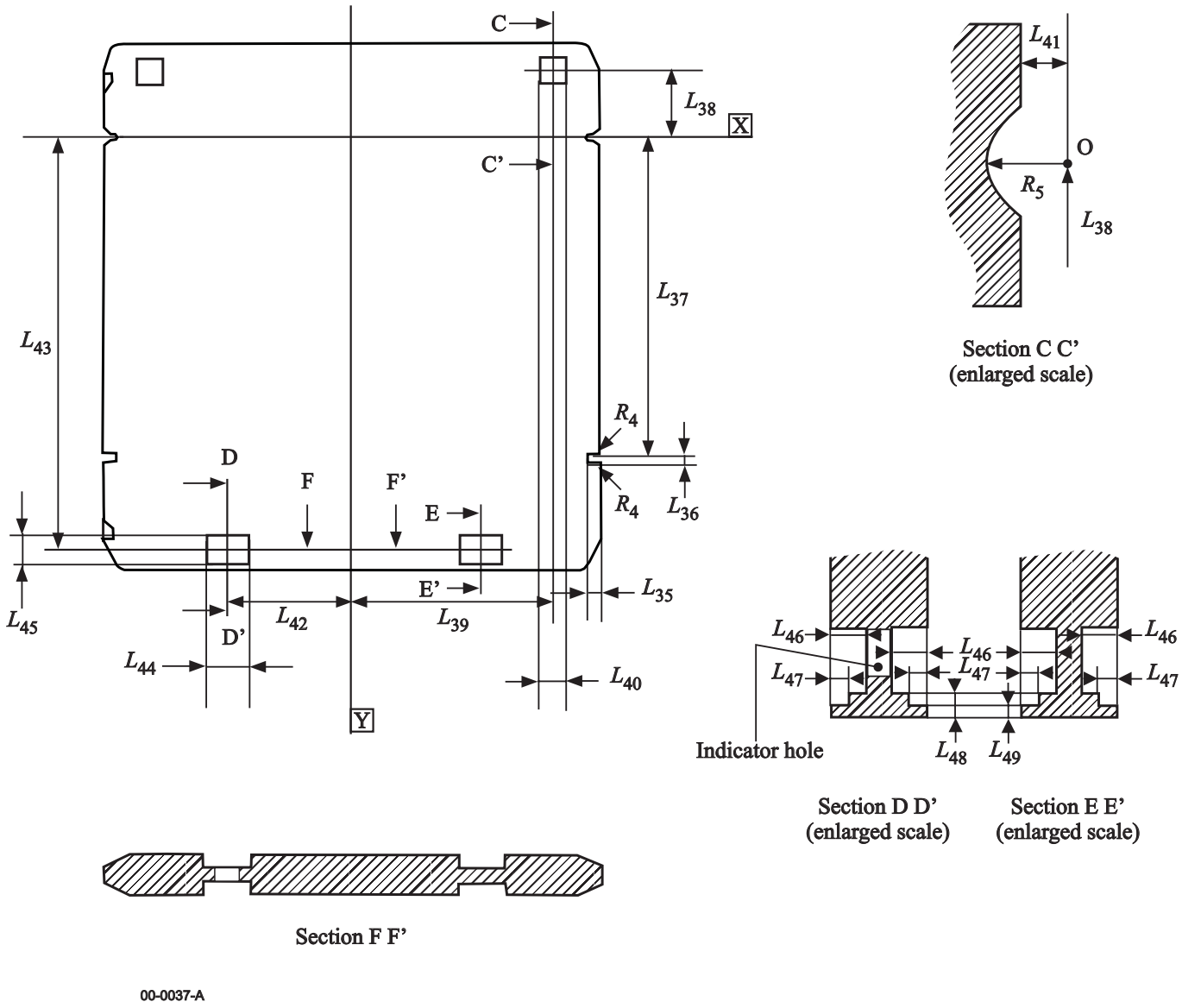

Figure 6 — Gripper slots and gripper notches

--`,,```,,,,````-`-`,,`,,`,`,,`---
© ISO/IEC 2001 – All rights reserved
Copyright International Organization for Standardization
Provided by IHS under license with ISO
No reproduction or networking permitted without license from IHS
Not for Resale

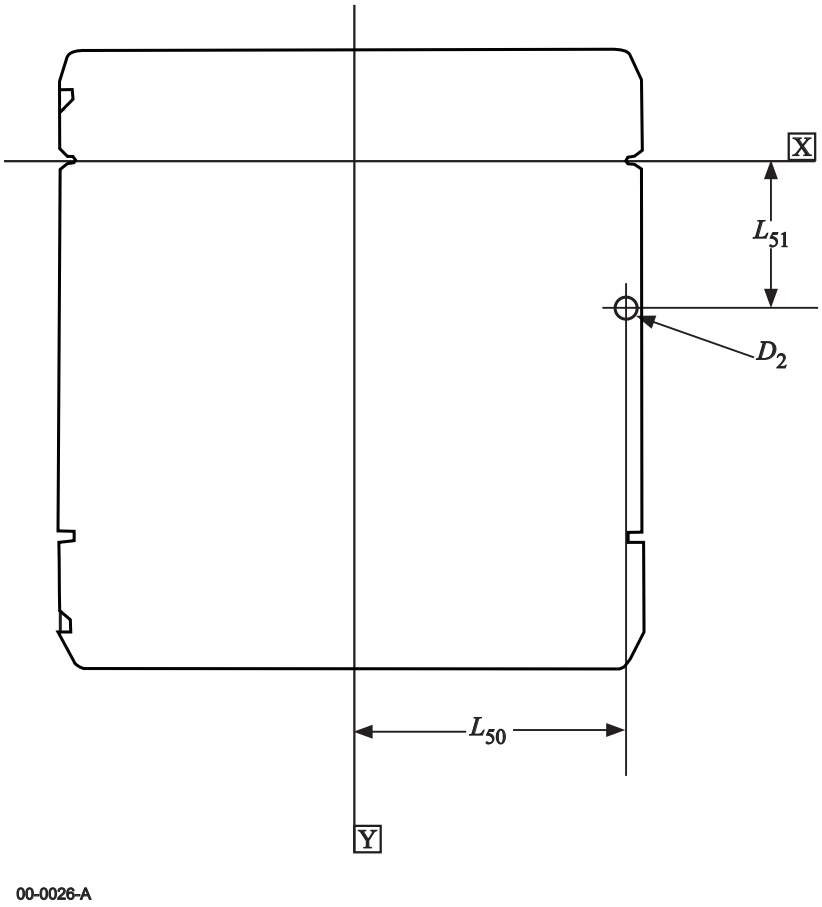

Figure 7 — Write-inhibit hole seen from side A

Copyright International Organization for Standardization
Provided by IHS under license with ISO
No reproduction or networking permitted without license from IHS
Not for Resale
© ISO/IEC 2001 – All rights reserved

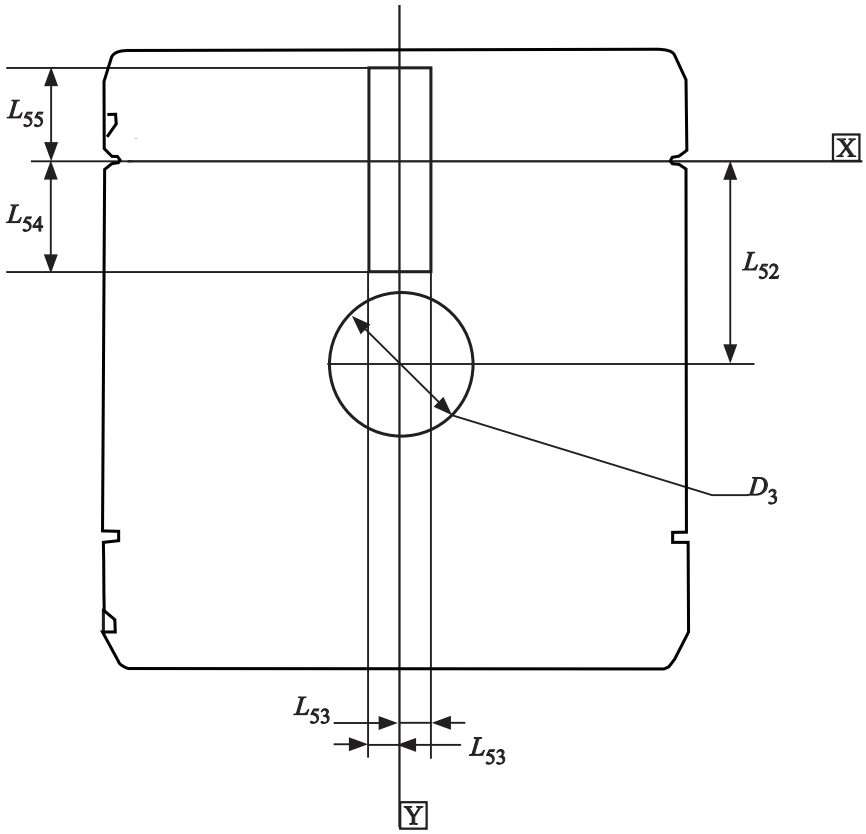

Figure 8 — Hub aperture and head window

© ISO/IEC 2001 – All rights reserved
Copyright International Organization for Standardization
Provided by IHS under license with ISO
No reproduction or networking permitted without license from IHS
Not for Resale

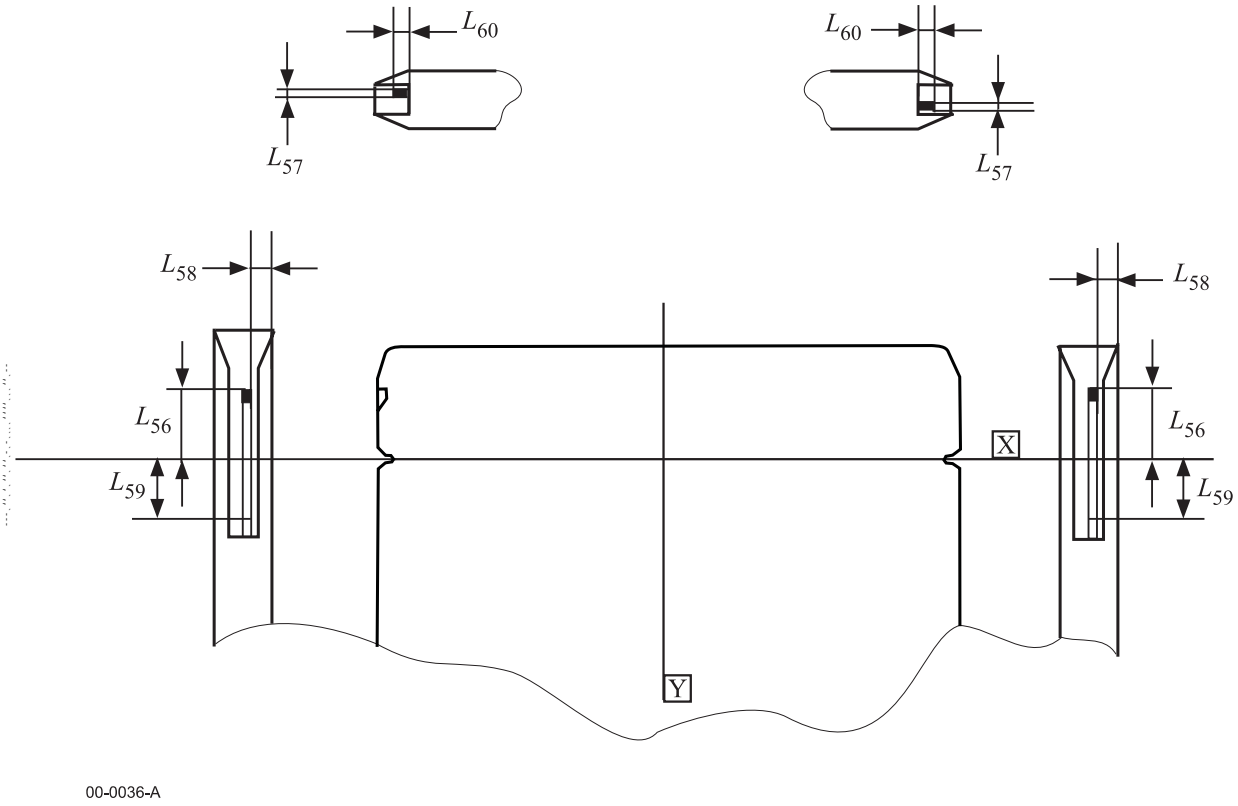

Figure 9 — Shutter opener

© ISO/IEC 2001 – All rights reserved
Copyright International Organization for Standardization
Provided by IHS under license with ISO
No reproduction or networking permitted without license from IHS
Not for Resale

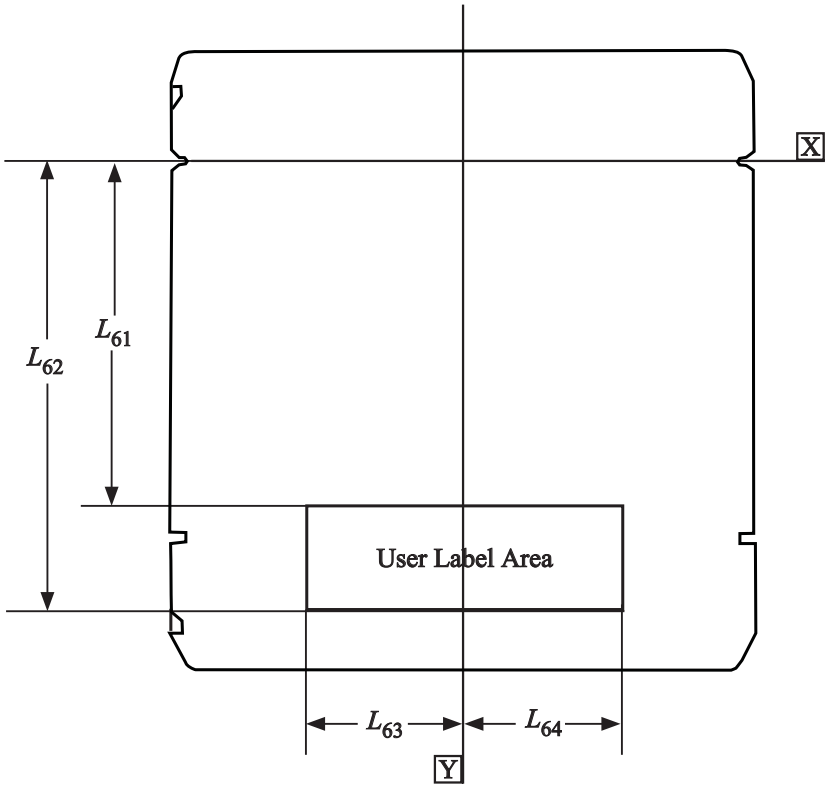

Figure 10a — User label area on side A / B

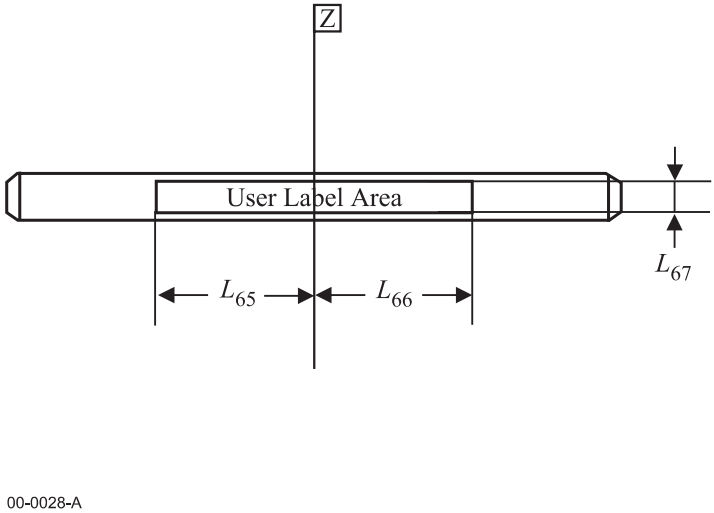

Figure 10b — User label area on bottom surface

--`,,```,,,,````-`-`,,`,,`,`,,`---

© ISO/IEC 2001 – All rights reserved

Copyright International Organization for Standardization
Provided by IHS under license with ISO
No reproduction or networking permitted without license from IHS
Not for Resale

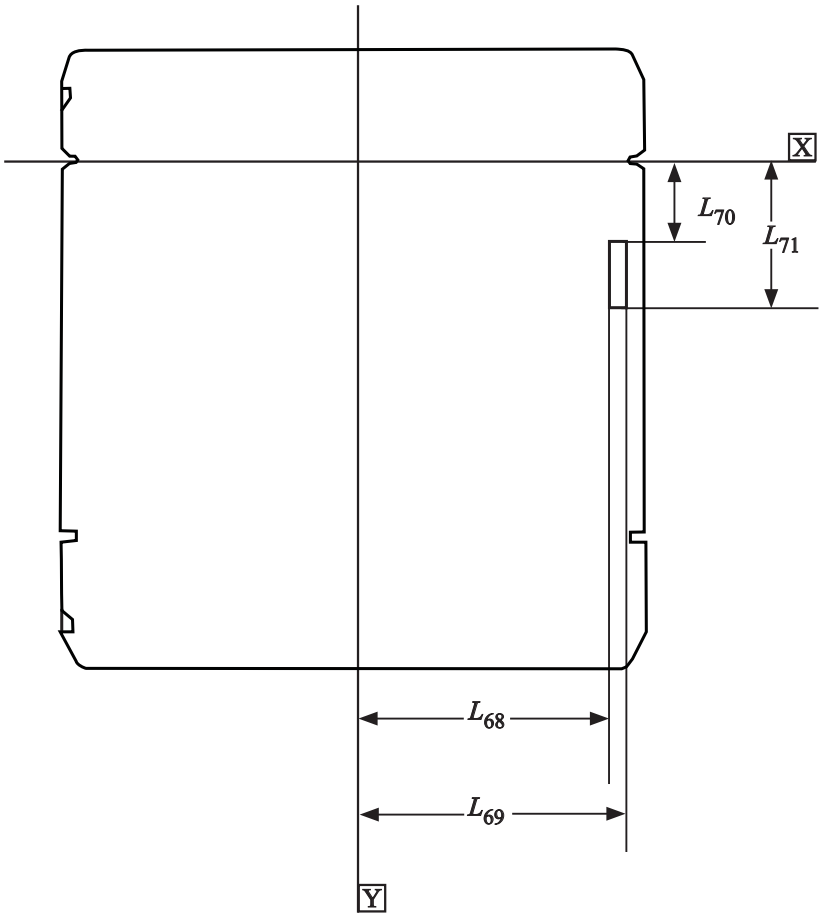

Figure 11 — Bar code area (side A)

© ISO/IEC 2001 – All rights reserved
Copyright International Organization for Standardization
Provided by IHS under license with ISO
No reproduction or networking permitted without license from IHS
Not for Resale

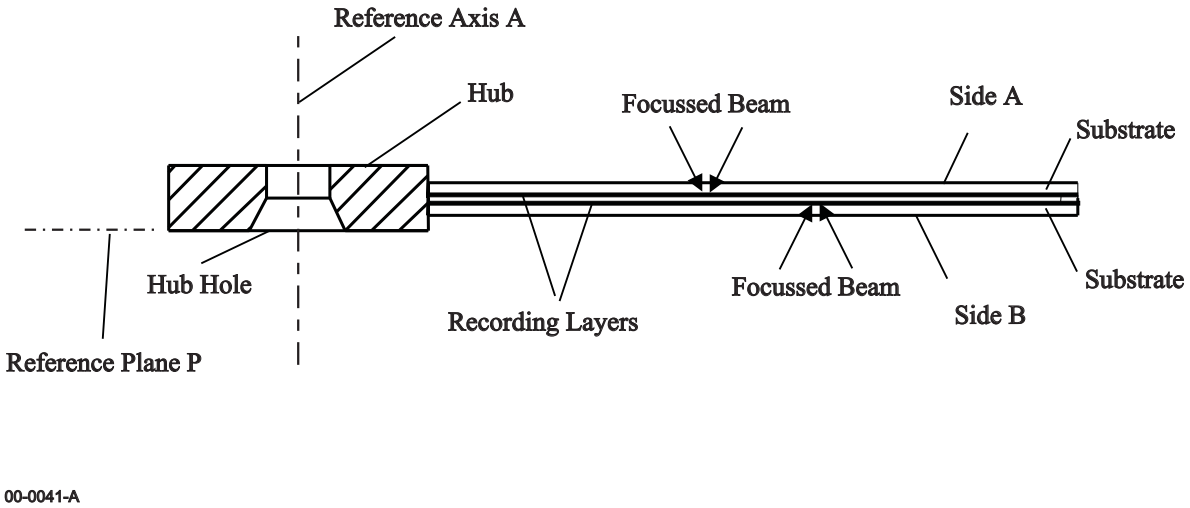

Figure 12a — Hub, Side A, Side B, Disk Reference Plane P and Axis A

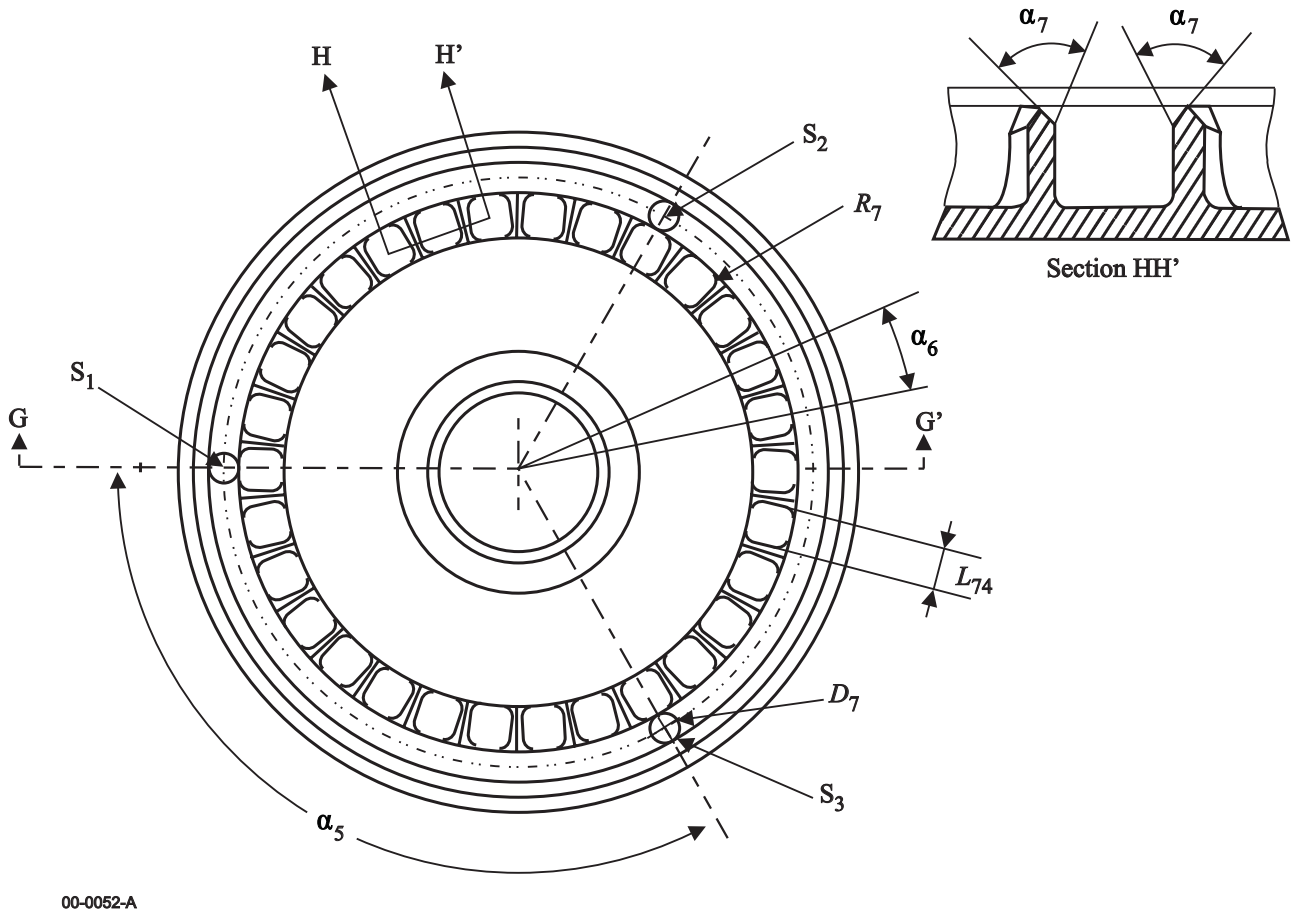

Figure 12b — Hub

--`,,```,,,,````-`-`,,`,,`,`,,`---
© ISO/IEC 2001 – All rights reserved
Copyright International Organization for Standardization
Provided by IHS under license with ISO
No reproduction or networking permitted without license from IHS
Not for Resale

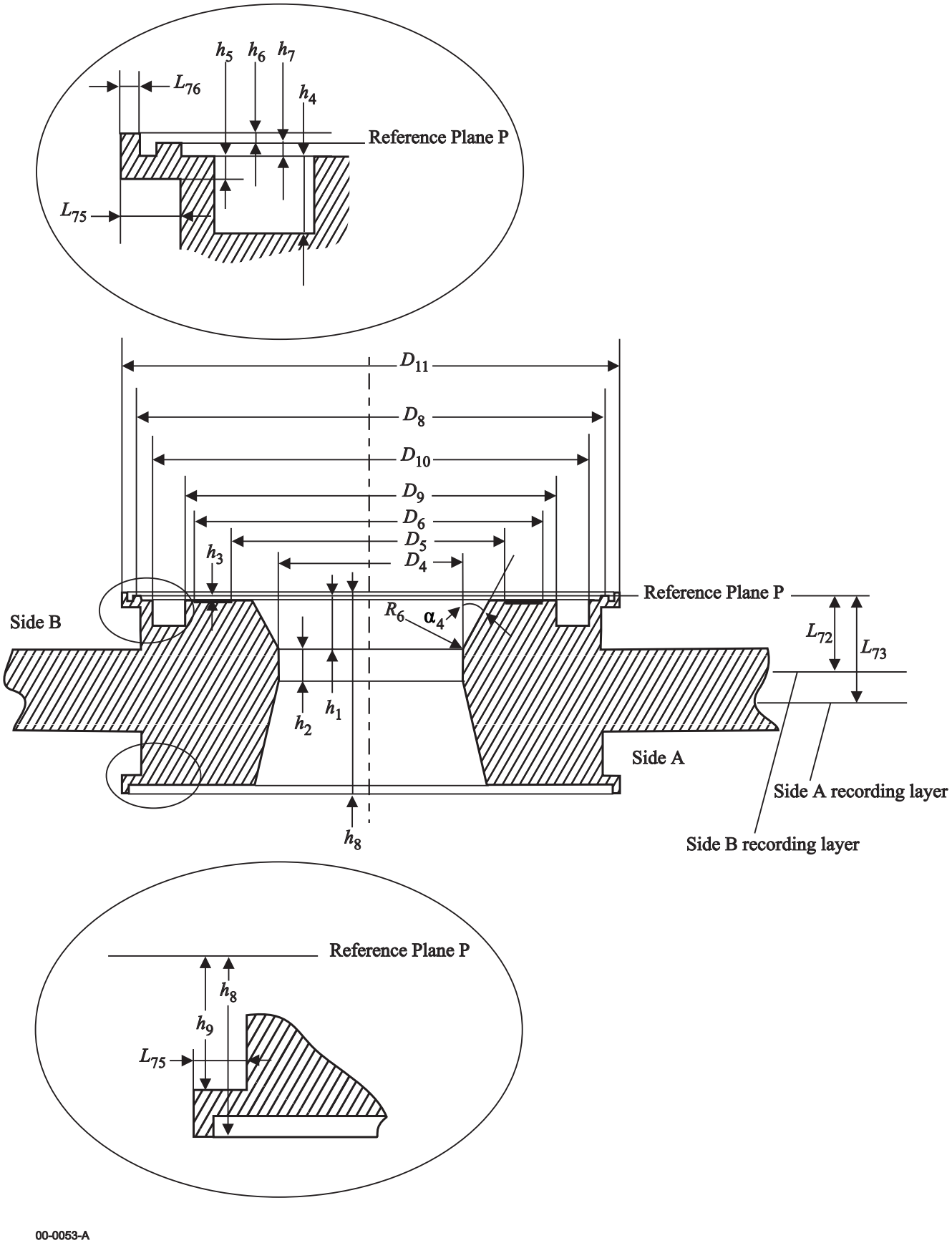

Figure 12c — Section GG' of hub

© ISO/IEC 2001 – All rights reserved
Copyright International Organization for Standardization
Provided by IHS under license with ISO
No reproduction or networking permitted without license from IHS
Not for Resale

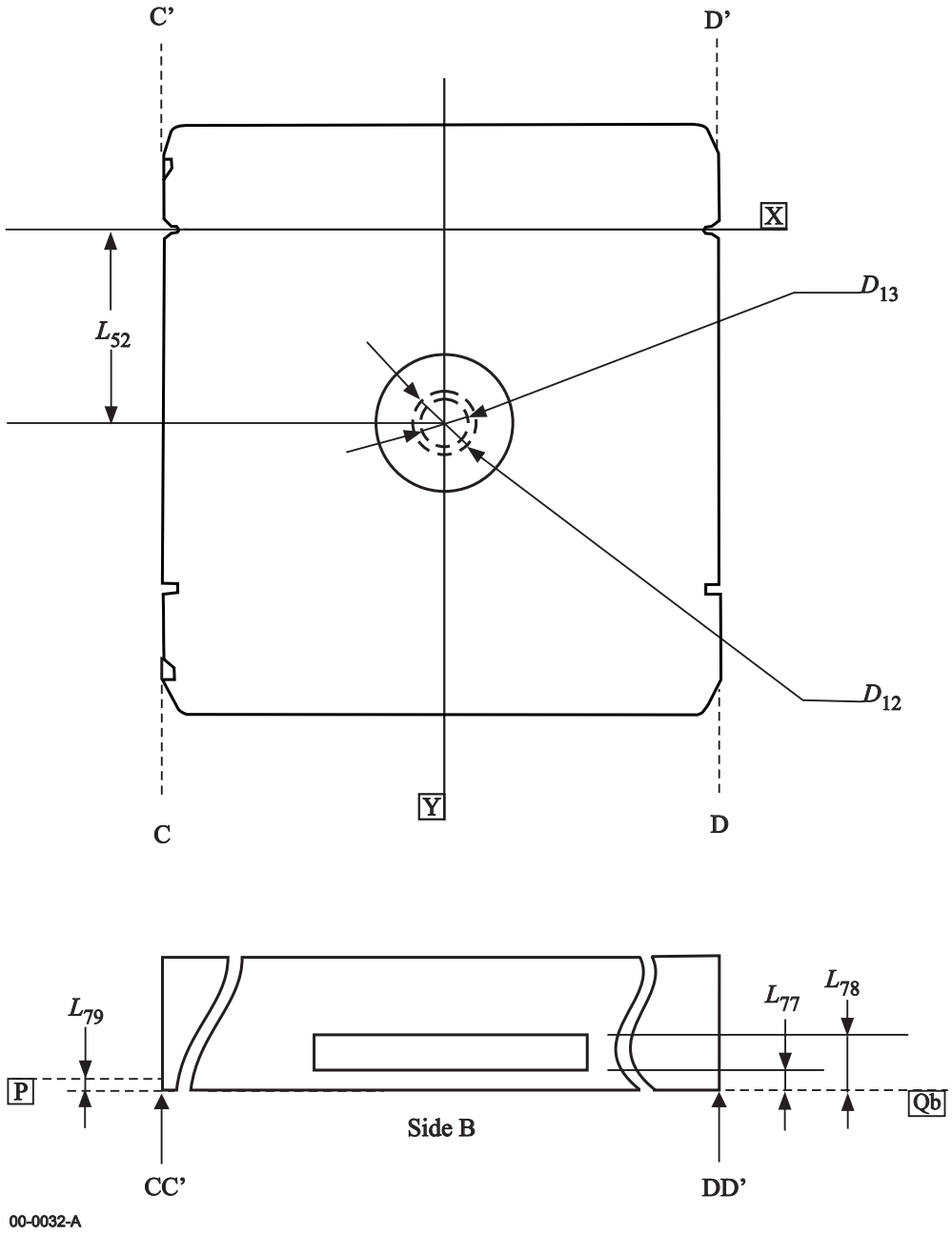

Figure 13 — Capture cylinder

© ISO/IEC 2001 – All rights reserved
Copyright International Organization for Standardization
Provided by IHS under license with ISO
No reproduction or networking permitted without license from IHS
Not for Resale

Section 3 — Format of information

13 General description

The 300 mm optical disk is two-sided and designed to allow for use in a drive with optical access from both sides simultaneously. The recording area on each side is partitioned into zones. Within each zone, the pre-formatted data, and disk drive recorded pre-written and user data are all recorded on a common spiral track centreline intended for the sampled servo tracking method.

14 Track format

14.1 Track definition

A track consists of a 360 ° turn of a spiral materialized by a succession of pre-written marks recorded on the spiral centreline.

14.2 Direction of track spiral

The disk has two formatted sides (A, B). On side A, the track spirals outwards from the inner diameter to the outer diameter when the disk rotates clockwise as viewed from the disk entrance surface of this side. On side B, the track spirals outwards from the inner diameter to the outer diameter when the disk rotates counter clockwise as viewed from the disk entrance surface of this side.

14.3 Track pitch

The track pitch is the distance between the centrelines of a pair of adjacent tracks, measured in a radial direction. It shall be 800 nm ± 35 nm.

14.4 Track numbering

Each track shall be identified by a track number.

Track 0 shall be located at radius 73,80 mm ± 0,20 mm.

Track 84 366 shall be located at radius 141,30 mm ± 0,20 mm.

The track numbers of tracks located at radii greater than that of Track 0 shall be increased by 1 for each track.

The track numbers of tracks located at radii smaller than that of Track 0 shall be negative, and decrease by 1 for each track.

Track address polarity is indicated by the most significant bit of the 20 bits track address, which is ONE for negative tracks and ZERO for positive tracks (see 14.8).

14.5 Track layout

A track shall contain 225 Segments of equal length (see figure 14).

14.6 Segment format

Each Segment shall contain 16 Frames of equal length, each consisting of a Servo Field and a Recordable Field.

Each Segment shall contain one Address Block (see 14.8).

14.7 Servo Field format

The Servo Field is intended to allow the drive to focus, track, access and generate a clock.

Each Servo Field shall contain 5 on-track prerecorded marks (see figure 15).

The unit length of the prerecorded marks in the Servo Field is the Servo Channel bit (SCb). The corresponding Servo Channel clock frequency shall be constant within the whole Information Area irrespective of the radial position.

The Servo Field shall be 45 SCb long.

© ISO/IEC 2001 – All rights reserved
Copyright International Organization for Standardization
Provided by IHS under license with ISO
No reproduction or networking permitted without license from IHS
Not for Resale

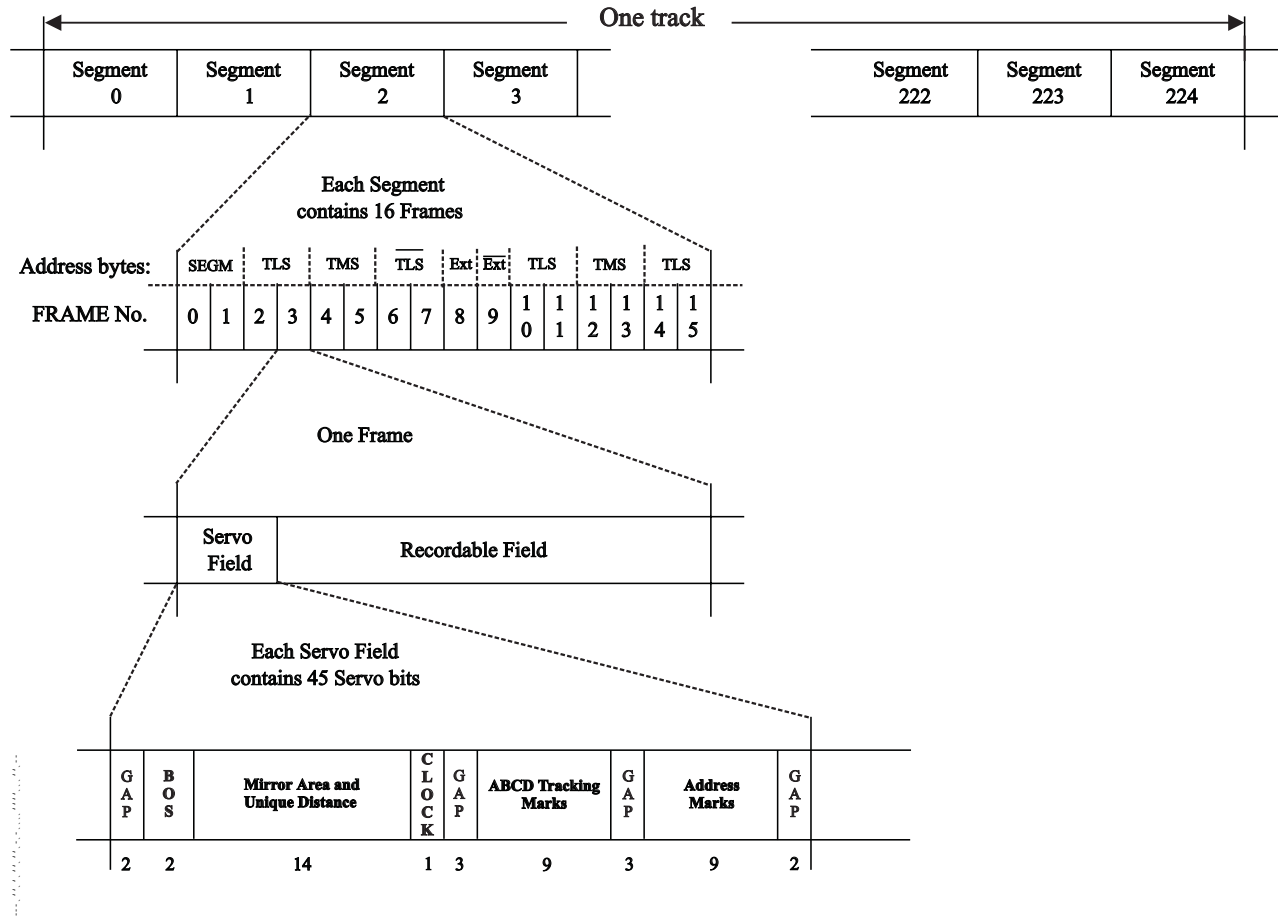

Figure 14 — Track layout

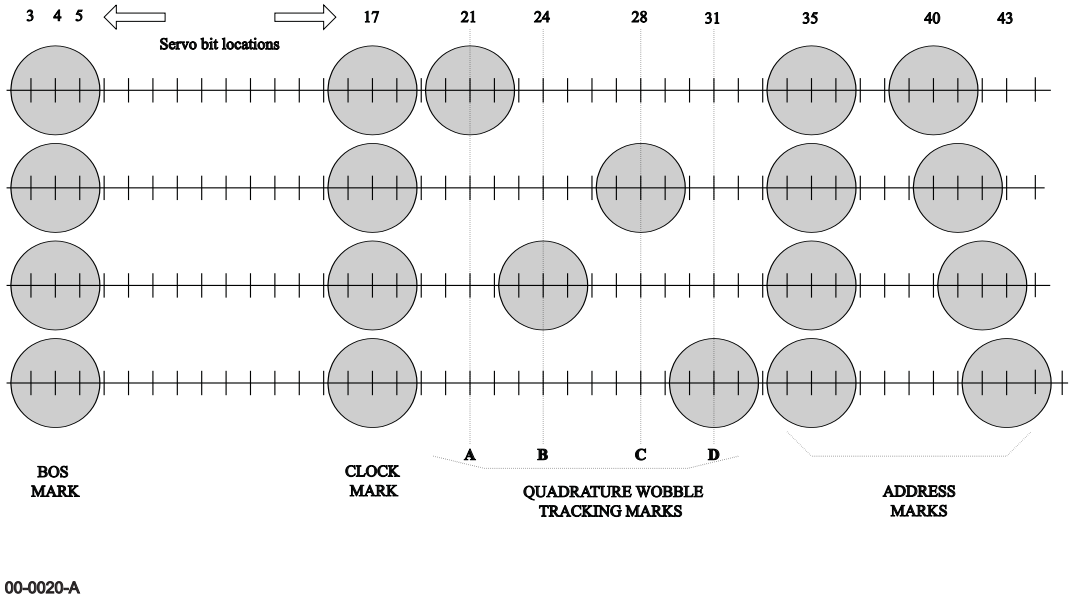

Figure 15 — Servo Field format

© ISO/IEC 2001 – All rights reserved
Copyright International Organization for Standardization
Provided by IHS under license with ISO
No reproduction or networking permitted without license from IHS
Not for Resale

The layout of the Servo Field is shown in figure 15 on a SCb scale. All marks shall have a 2 SCb length.

– Beginning of Segment (BOS) Mark (location 3 or 4)	Beginning of the Servo Field and unique distance. At location 3 in the first Frame of each Segment and location 4 in all other Frames.
– Clock Mark (location 17)	For clock synchronization.
– Quadrature Wobble Tracking (QWT) Mark (location 21, 28, 24, 31, on successive tracks)	For track following based on radial crosstalk. Also provides direction information.
– Address Marks (location 35 to 43)	Two marks which provide Segment address information and track counting information during seeks.

The mirrored area from location 5 to 16 is designed for focus sampling and unique distance for initializing the PLL.

14.8 Address format

Each Frame contains, in the Servo Field, one address nibble, resulting in a total of 8 address bytes per Segment (see figures 14 and 15).

The address nibbles are preformatted as shown on figure 14.

The Segment address byte (SEGM) shall be in Frames 0 and 1 (most significant nibble first).

The Track Least Significant (TLS) byte shall be in Frames 2+3, 6+7, 10+11 and 14+15.

The Track Most Significant (TMS) byte shall be in frames 4+5 and 12+13.

The Extended Address Nibble (Ext) defined as the 4 most significant bits of the 20 bits track address shall be in Frames 8 and 9.

A bar over the acronym means that it is a complementary to ONE byte or nibble.

On the media the most significant nibble precedes the least significant one.

The code used to represent the address nibles shall be the so-called Creeping One of Four code (COF) defined in annex E. Two address bits shall be represented by one mark, which may be in one of four Servo bit locations 40, 41, 42, 43 (see figure 15).

The address is read by differential detection and the creeping feature enables the reading of track addresses during high velocity seeks.

14.9 Recordable Field format

The Recordable Field is intended to record Data Information.

The unit length of the recorded information in the Recordable Field is the Data Channel bit (DCb).

The number of Data Channel bits per Recordable Field varies over the disk, depending of the radius, to maximize the capacity in maintaining almost the same aerial density. The corresponding Data Channel clock frequency and period (*T*) varies accordingly over the disk, depending of the radius.

The Recordable Field Format described in reference to a *T* scale, shall consist of 3 parts (see figure 16):

– A Reference Field, with a length of 13*T*, in which two 3*T* length marks are recorded during any write operation, to be used as a data phase and amplitude reference during subsequent read operation. These marks are recorded at locations 3 and 9 of the Reference Field.

– A User Data Field with a number of Data Channel bits depending of the Zone (more Data Channel bits in outer Zones).

– A termination field (3 Data Channel bits) necessary for the RLL(1,7) modulation code (see 16.1).

--`,,```,,,,````-`-`,,`,,`,`,,`---

© ISO/IEC 2001 – All rights reserved
Copyright International Organization for Standardization
Provided by IHS under license with ISO
No reproduction or networking permitted without license from IHS
Not for Resale

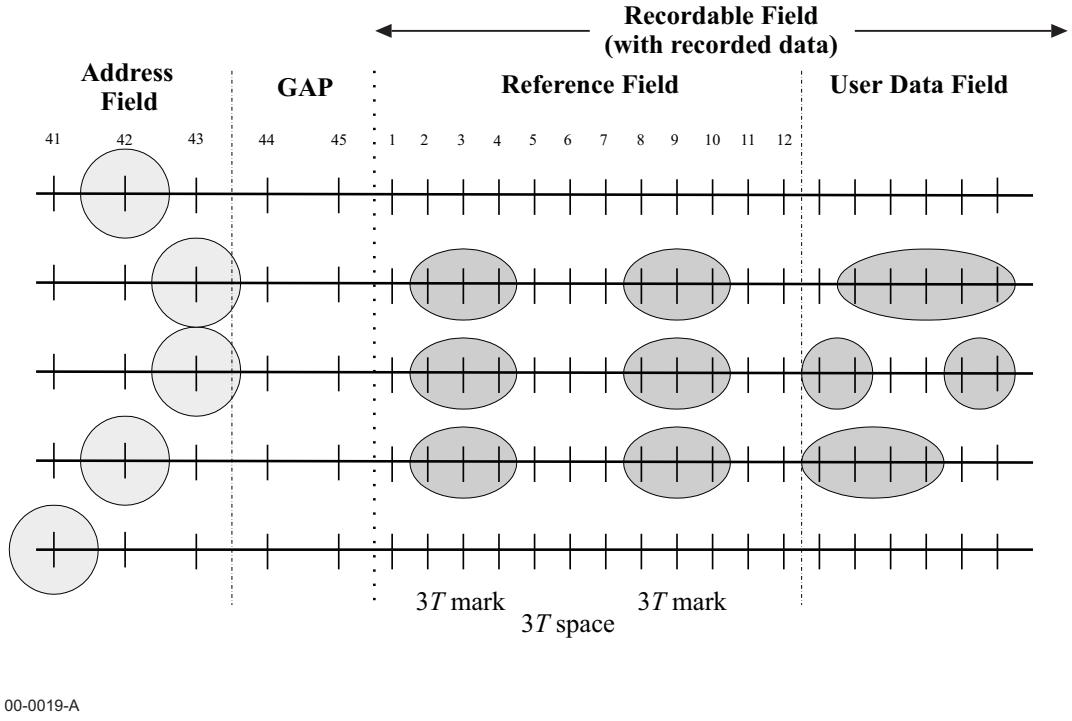

Figure 16 — Recordable field

15 Zone organization

The formatted area is partitioned in three parts: a Lead-in Zone, a User Area comprising 16 Data Zones and a Lead-out Zone, organized as shown in table 1.

Table 1 — Zone organization

Nominal radius in mm	Track number	Description
73,00	-1 000	Start of Lead-in Zone
73,80	00 000	First User Track, start of Data Zone 0
141,30	84 366	Last User Track, end of Data Zone 15
142,10	85 366	End of Lead-out Zone

The radii shown in table 1 are the nominal values of the radius of the centre of the corresponding tracks.

The tolerances on the location of Track 0 and Track 84 366 are specified in 14.4.

15.1 Logical Sector format

The logical Sector format shall be the same for all 16 Data Zones.

All logical Sectors shall begin at Frame boundaries (following a Servo-Field).

The structure of the Sector shall be as shown on table 2.

The first 10 Preamble bytes shall have the same mark-pattern as the Reference Field (a 3*T* pattern), recorded by writing bytes set to (AA). The last 2 Preamble bytes shall consist of a 2*T* pattern, recorded by writing bytes set to (EE).

The structure of the CRC and ECC Bytes shall be as defined in 15.2.

Bytes 5 to 7 of Control Record shall specify the Logical Block Address (LBA) of the Sector.

Bytes 8 to 10 of Control Record shall specify the Physical Block Address (PBA) of the Sector.

PBA/LBA formats shall be as defined in Annex F.

© ISO/IEC 2001 – All rights reserved

Copyright International Organization for Standardization
Provided by IHS under license with ISO
No reproduction or networking permitted without license from IHS
Not for Resale

Other bytes of Control Record are not defined by this International Standard. Data could be recorded at these locations by the drive.

Table 2 — Logical Sector format

Preamble	12 bytes (non-interleaved)
Data	2 048 bytes (interleaved)
CRC	4 bytes (interleaved
Control Record	18 bytes (interleaved) (bytes 5 to 7: LBA, bytes 8 to 10: PBA)
ECC	160 bytes (interleaved)
Total:	2 242 bytes per Sector

With the exception of the 12 Preamble bytes, all other bytes of a Sector shall be interleaved as specified by table G.1 of annex G.

15.2 CRC and ECC bytes

The Cyclic Redundancy Check bytes and Error Correction Code bytes shall be used by the error detection and correction system to correct erroneous data. The ECC is a Reed-Solomon code of degree 16.

The computation of the check bytes of the CRC and ECC shall be as specified in annex G.

15.3 User Area - Format of Data Zones

The User Area shall consist of 16 Data Zones, each with a different number of Sectors per track (to maximize the total capacity while maintaining the same aerial density), as shown in table 3.

Table 3 — Format for Data Zones

Data Zone number	Start Track	End Track	Number of tracks per Data Zone	Number of Sectors per track	Number of Sectors per Data Zone	Percent of total	Capacity in Mbytes	Start radius in mm
0	0	5 271	5 272	63	332 136	4,47	680,21	73,80
1	5 273	10 544	5 272	66	347 952	4,69	712,61	78,02
2	10 546	15 817	5 272	70	369 040	4,97	755,79	82,24
3	15 819	21 090	5 272	73	384 856	5,18	788,19	86,46
4	21 092	26 363	5 272	76	400 672	5,40	820,58	90,67
5	26 365	31 636	5 272	81	427 032	5,75	874,56	94,89
6	31 638	36 909	5 272	83	437 576	5,89	896,16	99,11
User Data 7	36 911	41 802	4 892	87	425 604	5,73	871,64	103,33
Spares 7	41 803	42 182	380	87	33 060	0,45	67,71	107,24
WPC 8	42 184	42 563	380	90	34 200	0,46	70,04	107,55
User Data 8	42 564	47 455	4 892	90	440 280	5,93	901,69	107,85
9	47 457	52 728	5 272	94	495 568	6,68	1 014,92	111,77
10	52 730	58 001	5 272	97	511 384	6,89	1 047,31	115,98
11	58 003	63 274	5 272	100	527 200	7,10	1 079,71	120,20
12	63 276	68 547	5 272	102	537 744	7,24	1 101,30	124,42
13	68 549	73 820	5 272	105	553 560	7,46	1 133,69	128,64
14	73 822	79 093	5 272	109	574 648	7,74	1 176,88	132,86
14	73 822	79 093	5 272	109	574 648	7,74	1 176,88	132,86
15	79 095	84 366	5 272	112	590 464	7,95	1 209,27	137,08
Total:			84 352		7 422 976		15 202,25	141,29
User:			83 592		7 355 716	99,09	15 064,51	

One track at each Zone boundary shall not be used to record data and shall be left blank.

The WPC tracks shall be used for calibration of the write power of the drive (see 21.4.3).

© ISO/IEC 2001 – All rights reserved
Copyright International Organization for Standardization
Provided by IHS under license with ISO
No reproduction or networking permitted without license from IHS
Not for Resale

15.3.1 Detailed format of Data Zones

The detailed format of the Data Zones is shown in table 4.

Table 4 — Detailed format for Data Zones

Zone No.	Sectors per track	Clocks per Frame	Clock frequency in kHz	DCb per Data Field	Bytes per Data Field	Frames per Sector	DCb period *T* in ns	Data rate in Mbyte/s	Linear density in μm/DCb	Arial density in Mbit/mm^2
0	63	569	32 774,40	480	40,00	57	30,51	2,06	0,226	3,681
1	66	597	34 387,20	504	42,00	54	29,08	2,16	0,228	3,651
2	70	625	36 000,00	528	44,00	51	27,78	2,29	0,230	3,624
3	73	652	37 555,20	552	46,00	49	26,63	2,39	0,232	3,599
4	76	680	39 168,00	576	48,00	47	25,53	2,49	0,233	3,577
5	81	721	41 529,60	612	51,00	44	24,08	2,65	0,230	3,626
6	83	749	43 142,40	636	53,00	43	23,18	2,72	0,231	3,605
7	87	776	44 697,60	660	55,00	41	22,37	2,85	0,232	3,585
8	90	804	46 310,40	684	57,00	40	21,59	2,95	0,234	3,567
9	94	832	47 923,20	708	59,00	38	20,87	3,08	0,235	3,550
10	97	859	49 478,40	732	61,00	37	20,21	3,18	0,236	3,534
11	100	887	51 091,20	756	63,00	36	19,57	3,28	0,237	3,520
12	102	914	52 646,40	780	65,00	35	18,99	3,34	0,238	3,507
13	105	928	53 452,80	792	66,00	34	18,71	3,44	0,242	3,443
14	109	956	55 065,60	816	68,00	33	18,16	3,57	0,243	3,433
15	112	997	57 427,20	852	71,00	32	17,41	3,67	0,240	3,471

16 Recording code

The recording code used to record all data in the formatted areas of the disk shall be the run-length limited code known as RLL(1,7) as defined in table 5.

A ONE indicates a transition (mark-to-land or land-to-mark) while a ZERO indicates no transition. An X means the inverse of the preceding Channel bit (if the preceding Channel bit was ONE, the X means ZERO and vice versa).

Basically 2 data bits translate into 3 Channel bits (group A). However, if these first 2 data bits are both ZERO then the next 2 data bits are evaluated too and the 4 data bits translate into 6 Channel bits (group B).

Table 5 — Conversion table for RLL(1,7) Code

Data Bits (msb first)	Transitions	Group
01	X00	A
10	010	A
11	X01	A
0001	X00001	B
0010	X00000	B
0011	010001	B
0000	010000	B

16.1 Termination Field

The Termination Field shall consist of 3 Data Channel bits which are added to the RLL(1,7) sequence at the end of each Recordable Field within each Frame, to properly terminate the last string of marks or spaces before entering the next Servo Field. A mark may be written at the centre of the two first termination bits. The third termination bit is always blank (merging bit).

© ISO/IEC 2001 – All rights reserved

Copyright International Organization for Standardization
Provided by IHS under license with ISO
No reproduction or networking permitted without license from IHS
Not for Resale

16.2 Data recording method for the RLL(1,7) Code

The method of recording shall be the so-called pulse length modulation. However, any length of continuous mark shall be simulated by a string of single marks. A 2*T* mark shall be made by a single laser pulse and it shall be centred between two Channel bits so as to create a 11 pattern.

17 Defect Management

17.1 Defective Sectors recorded in the SDI

Addresses of Sectors detected defective during manufacturing of the disk shall be recorded in the SDI as specified in bytes 64 to 2039 (see 18.3.2 and annex H).

17.2 Reading and writing Procedure

When reading and writing, all defective sectors listed in the SDI shall be skipped and the data shall be read or written in the Static Relocation Area (see 17.3).

If a write failure or a verify failure occurs the failed Sector shall be written to the Relocation Area and the failed sector address shall be added to the Dynamic Relocation Maps Area (see 17.4).

17.3 Format of the Relocation Area

The area dedicated to relocation shall be in the Spare Area (see 15.3) the range from Track 41 803, Sector 0 to Track 42 179, Sector 86 defining 32 799 blocks of data (each with one Sector length), numbered 0 to 32 798 and partitioned as follows:

– Static Relocation Area: from

– block 0 to n, where n is the number of bad Sectors recorded in the SDI (see annex H, bytes 64 to n).

– Gap: 1 Track (87 Blocks) from Block n to n+87

– Dynamic Relocation and Dynamic Relocation Maps Areas: The range from Block *n*+88 to 32 798 shall be subdivided in groups of 260 blocks of which first 256 shall be dedicated to the Dynamic Relocation and last 4 to Dynamic Relocation Maps

17.4 Format of the Dynamic Relocation Maps Sectors

Dynamic Relocation Maps shall provide for LBA to PBA association for LBAs which were relocated to the Dynamic Relocation Area. Each Dynamic Relocation Map Sector covers 248 sectors in the Dynamic Relocation Area. Dynamic Relocation Map Sectors shall have the format specified in table 6

Table 6 — Dynamic Relocation Maps Sector format

Byte Number	Content
0	PBA0 Offset (Offset into PBA range covered by this Map Sector)
1	LBA0 MSB (Most Significant Byte)
2	LBA0 NSB (Next Significant Byte)
3	LBA0 LSB (Least Significant Byte)
4	PBA1 Offset
5	LBA1 MSB
6	LBA1 NSB
7	LBA1 LSB
8	PBA2 Offset
9	LBA2 MSB
10	LBA2 NSB
11	LBA2 LSB
⋮	⋮
992 to 1004	Not defined by this International Standard
1005	Start PBA MSB
1006	Start PBA NSB

continued

© ISO/IEC 2001 – All rights reserved
Copyright International Organization for Standardization
Provided by IHS under license with ISO
No reproduction or networking permitted without license from IHS
Not for Resale

1007	Start PBA LSB
1008 to 1011	Number of PBAs covered by this Map Sector (always 248)
1012	ID (Map Identification, numbered 0 to *n*)
1013	248
1014	248
1015 to 2047	Not defined by this International Standard

The LBA to PBA association for a Sector covered by a Dynamic Relocation Map shall be computed as follows:

For LBAn: PBAn = Start PBA + PBAn Offset

18 Prerecorded Information

18.1 Prerecorded Information definition

Prerecorded Information is data that is written by the disk manufacturer during the final test for each disk.

18.2 Reserved regions

Prerecorded Information shall be written in specific tracks of groups of reserved tracks (Reserved Regions).

Table 7 shows detailed track locations of the various Reserved Regions and tracks at the middle radius of the disk.

Table 7 — Reserved track locations

Track Number	Zone Number	Information type	Use / Comments
41 803 – 42 179	7	Defect Management and Spares	For Drive Controller
42 180	7	Blank	
42 181	7	SDI	In every 8th Sector
42 182	7	Blank	
42 183	7	Blank	For baseline reference
42 184	8	Blank	
42 185	8	RFO Track	Crosstalk data pattern for RFO
42 186	8	RFO Track	Read Focus Optimization Track
42 187	8	RFO Track	Crosstalk data pattern for RFO
42 188	8	Blank	
42 189 – 42 199	8	Media Test WPC	For media test and calibration
42 200 – 42 562	8	Drive WPC	For Write Power Calibration.
42 563	8	Blank	

(Tracks –1 and –3 are blank)

18.3 Specific Disk Information (SDI)

The Specific Disk Information (SDI) is data that is specific to each side and contains information such as write sensitivity and defects location. SDI data is fully encoded including complete ECC and interleave.

A primary SDI shall be recorded on Track 42 181 of Data Zone 7.

A secondary SDI shall be recorded on Track –2 of the Lead-in Zone for backup.

18.3.1 SDI Sector allocation

Both SDI Tracks shall be divided into groups of 8 Sectors (SDI 0 to SDI 7). SDI 0 shall be written by the disk manufacturer, while SDI 1 (and higher) can be written later if it becomes necessary to override the information contained in SDI 0 (or higher). This allows for 7 updates after writing the original SDI.

Each side of the disk shall have its own SDI Sectors, which are repeated in every 8th Sector as follows:

SDI 0: in Sectors 7, 15, 23, 31, etc.
SDI 1: in Sectors 6, 14, 22, 30, etc.
SDI 2: in Sectors 5, 13, 21, 29, etc.

etc. for SDI 3 to SDI 7.

© ISO/IEC 2001 – All rights reserved

Copyright International Organization for Standardization
Provided by IHS under license with ISO
No reproduction or networking permitted without license from IHS
Not for Resale

18.3.2 SDI content

A-side SDI shall be recorded on the A-side of the disk; B-side SDI shall be recorded on the B-side of the disk.

Table 8 gives a summary of the SDI content. The detailed description of the SDI bytes is given in annex H.

In Table 8, "*n*" (Bytes 64 to 2039) is determined by the actual number of bad Sector ranges on the disk side. There is room for 247 bad Sector ranges. Each range may cover hundreds of tracks and multiple Sectors. The error codes for the Bad Sector Maps shall be as defined in table 9.

18.4 Read Focus Optimization (RFO) Tracks

The RFO Tracks contain data patterns with worst case read-margins for allowing the drives to optimize their focus offset for each disk and thus also reduce the effects of temperature and mechanical drift. The RFO data pattern is identical to the WPC data pattern as described in 21.4.3. The Crosstalk data pattern is worst case for the WPC pattern. The RFO Tracks shall be written by the Media manufacturer at the locations as defined in 18.2 at nominal Write Power.

Table 8 — Data in each SDI Sector (Summary)

Byte Number	Information	Setting	Comments
0	SDI Revision Code	(01)	For this International Standard
1	Product Identifier	(08)	For this International Standard
2	Servo Writer Number	Retrieved	Defined by media manufacturer
3	Media Tester Number	Retrieved	Defined by media manufacturer
4 to 7	Test Date	Retrieved	Year (2B), Month (1B), Day(1B)
8 to 11	OMA Number	Retrieved	From drive
12	Clock Mark Signal Amplitude	Measured	Value = 100 × I_c/I_o , (typical value)
13	Data Mark Signal Amplitude	Measured	Value = 100 × I_d/I_o , for 3T marks, (typical value)
14	Optimum Read Power	Measured	Value = 100 × Power in mW
15	Maximum Read Power	Measured	Value = 100 × Power in mW
16	Radial Tracking Gain Multiplier IR	Measured	(64) = 100%, measured on sample basis
17	Radial Tracking Gain Multiplier MR	Measured	(64) = 100%, measured on sample basis
18	Radial Tracking Gain Multiplier OR	Measured	(64) = 100%, measured on sample basis
19	Axial Tracking Gain Multiplier IR	(64)	(64) = 100%, for this International Standard
20	Axial Tracking Gain Multiplier MR	(64)	(64) = 100%, for this International Standard
21	Axial Tracking Gain Multiplier OR	(64)	(64) = 100% for this International Standard
22	Write Power Boost Z0	Measured	Percentage of Write Power Boost for Cold Burns in Zone 0
23	Write Power Boost Z8	Measured	Percentage of Write Power Boost for Cold Burns in Zone 8
24	Write Power Boost Z15	Measured	Percentage of Write Power Boost for Cold Burns in Zone15
25	Write Power Droop Z0	Measured	Percentage of Write Power Droop for Long Marks in Zone 0
26	Write Power Droop Z8	Measured	Percentage of Write Power Droop for Long Marks in Zone 8
27	Write Power Droop Z15	Measured	Percentage of Write Power Droop for Long Marks in Zone 15
28	Nominal Write Power for Zone 8	Measured	Value = 10 × Power in mW, measured on each disk
29	Write Power Multiplier for Zone 0	Measured	(64) = 100%, measured on each disk
30	Write Power Multiplier for Zone 8	(64)	Always set to (64) (= 100%)
31	Write Power Multiplier for Zone 15	Measured	(64) = 100%, measured on each disk
32 to 47	Write Power Media Profile for zones 0 – 15	(64)	(64) = 100% , all set to 100% for this International Standard This profile is not measured on each disk
48 to 55	Media Identifier	Retrieved	Eight 7-bit coded characters, from File
56	Disk side	Retrieved	One 7-bit coded character A or B, from File

continued

© ISO/IEC 2001 – All rights reserved
Copyright International Organization for Standardization
Provided by IHS under license with ISO
No reproduction or networking permitted without license from IHS
Not for Resale

Byte Number	Information	Setting	Comments
57	A/B sector alignment	Measured	Position of sector 0 on the B-side relative to sector 0 on the A-side (in segment units)
58 to 63	Not used	(00)	
64 to *n*	Bad Sector Maps 8 Bytes for each defect range	Measured	Error Code (1 byte), Start Track (3 bytes), Number of Tracks (2 bytes), Start Sector (1 byte), Number of Sectors (1 byte)
n to 2039	Remainder of maps area	(00)	Fill the remainder of the maps area with ZEROs
2040 to 2041	Total number of Bad Sectors	Computed	As contained in the maps above
2042 to 2043	Not used	(00)	
2044 to 2045	Checksum (4 bytes)	Computed	Sum of bytes 0 to 2043

Table 9 — Error Codes of the Error Byte Type for the Bad Sector Maps

Setting	Error Type
Bit 0 set to ONE	Servo Field Defect (including Clock and Wobble)
Bit 1 set to ONE	Tracking over Limit
Bit 2 set to ONE	Focus over Limit
Bit 3 set to ONE	Quadrature Wobble Defect
Bit 4 set to ONE	Data Field Defect
Bit 5 set to ONE	"No Transfer Start" status (usually due to defects in the previous sector)
Bit 6 set to ONE	Clock Defect
Bit 7 set to ONE	PLL loss (fatal defect)

A designated bit set to ZERO indicates no error of the corresponding type.

Section 4 — Characteristics of Prerecorded Information

19 Method of testing

The format of the Prerecorded Information on the disk is defined in 14.5 to 14.8. Clause 20 specifies the requirements for the signals from prerecorded information marks, as obtained when using the Reference Drive specified in clause 9.

Clause 20 specifies the quality of the prerecorded marks averaged over one track and measured at 7 Tracks: 00 000, 10 000, 26 000, 42 200, 58 000, 74 366, 84 366. Local deviations from the specified values, called defects, can cause tracking errors, erroneous Servo Fields, or errors in the Recordable Fields. These errors are covered in section 6.

19.1 Environment

All signals specified in clause 20 shall be within their specified ranges with the cartridge in any environment in the range of allowed operating environments defined in 8.1.2.

19.2 Use of the Reference Drive

All signals specified in clause 20 shall be measured in the indicated channels of the Reference Drive. The drive shall have the following characteristics for the purpose of these tests.

19.2.1 Optics and mechanics

The focused optical beam shall have the properties defined in 9.2 a) to e). The disk shall rotate as specified in 9.5.

19.2.2 Read power

The read power is the optical power incident at the entrance surface, used when reading. It shall be

– 0,8 mW on spin up,

– the Optimum Read Power $P_{r\ opt}$ recorded in the SDI, after spin up and reading of the SDI.

19.2.3 Read channel

The Read Channel shall have the implementation as given by Channel 1 in 9.3.

© ISO/IEC 2001 – All rights reserved

Copyright International Organization for Standardization
Provided by IHS under license with ISO
No reproduction or networking permitted without license from IHS
Not for Resale

The edge positions of the data signal shall be measured for testing purposes by a combination of the threshold and so-called SISIC methods as defined in annex J. The threshold value is referenced to the centre of the peak to peak of the read out signal in each Recorded Reference Field (see 14.9).

19.2.4 Tracking

19.2.4.1 Axial Tracking error signal derivation

The axial tracking error signal Sa (see 9.4) is derived by sampling and holding signal $(J_1 + J_3) - (J_2 + J_4)$ delivered by Channel 2 (see figure 1) when the light spot scans the mirrored area of the Servo Field (from Servo bit locations 5 to 16, see 14.7 and figure 15).

19.2.4.2 Radial Tracking error signal derivation

The amplitude of radial tracking error signal Sr (see 9.4) is derived by sampling and holding difference of signals I_w delivered by Channel 1 (see figure 1) when the light spot passes in front of the centres of the two successive Quadrature Wobble Tracking Marks of the neighboured tracks (see figures 15 and 17).

The sign of the radial tracking signal is depending of the right/left side occurrence of the two successive Quadrature Wobble Tracking Marks of the neighboured tracks. This sign changes every two tracks and can be determined by the position of the Quadrature Wobble Tracking centred Mark of the track being scanned.

19.2.4.3 Tracking requirements

During the measurement of the signals, the focus of the optical beam shall have an axial deviation of not more than

$$e_{max}\,(\text{axial}) = 0{,}50\ \mu\text{m}$$

from the recording layer, and it shall have a radial deviation of not more than

$$e_{max}\,(\text{radial}) = 0{,}08\ \mu\text{m}$$

from the centre of a track.

19.3 Definition of signals

Figure 17 shows the signals specified in clause 20 (for a track with Tracking Mark at location C).

Where (see also figure 15):

I_o , is the signal amplitude of the nominal reflection level of the unrecorded area.

I_c , is the signal amplitude at the centre of the Clock Mark.

I_{wa} , I_{wb} , I_{wc}, are the signal amplitudes at centres of QWT Marks, positioned at A, B, C.

All signals are linearly related to currents through a photodiode detector, and are therefore linearly related to the optical power falling on the detector.

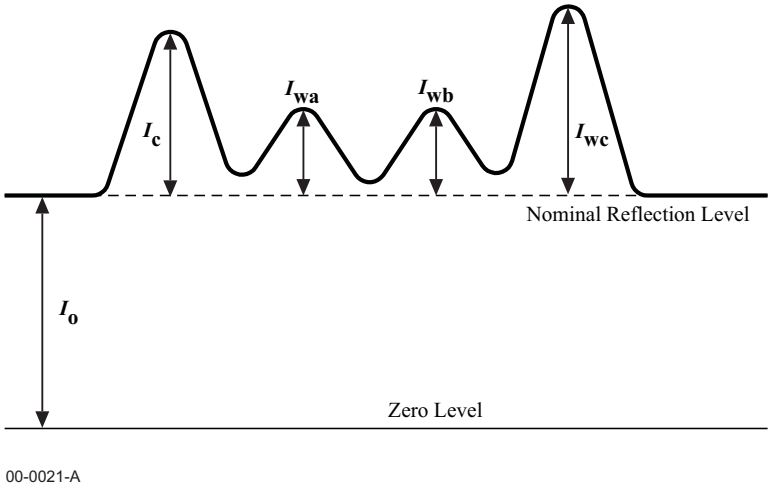

Figure 17 — Read Signal from Servo-Marks

© ISO/IEC 2001 – All rights reserved
Copyright International Organization for Standardization
Provided by IHS under license with ISO
No reproduction or networking permitted without license from IHS
Not for Resale

20 Prerecorded Information signal requirements

20.1 Modulation Depth of preformatted marks

The Modulation Depth of preformatted marks I_c / I_o, measured while tracking at track centre, shall be within 5% of the typical value recorded in the SDI (see 18.3.2).

The change of the Modulation Depth over one revolution shall be less than 5%.

The Modulation Depth variation over the entire User Area shall be less than 10% of the SDI recorded figure.

20.2 Ratio of minimum and maximum Clock Mark signal amplitude with open tracking loop

The ratio I_{min} / I_{max} of minimum and maximum Clock Mark signal amplitude with open tracking loop shall be less than 0,75.

20.3 Clock Mark jitter

The maximum allowable jitter of the Clock Marks shall be:

Between any pair of adjacent tracks: 1/4 Servo Channel bit

In-track for $f > 1$ kHz: 1/20 Servo Channel bit

In-track for $f \leq 1$ kHz: 1/4 Servo Channel bit

20.4 Relative tangential displacement of preformatted marks

The maximum displacement of the preformatted marks relative to their intended position as determined by the repetition of the Clock Marks shall be 1/20 Servo Channel bit.

20.5 Variation of QWT Marks signal amplitude

While tracking at the track centre of any track:

– The signal amplitude from both adjacent QWT Marks (I_{wa} and I_{wb} in figure 17) shall be at least 15 % of the Clock Mark signal amplitude I_c.

– The local amplitude variation of signals from the 4 adjacent QWT Marks shall be less than 5 %.

20.6 Track pitch

The track pitch for the entire preformatted area shall be 800 nm ± 35 nm (see 14.3).

20.7 Radial runout

The radial runout of tracks shall not exceed 100 μm (see 11.4.7).

20.8 Radial accelerations

Radial accelerations shall not exceed 3 m/s^2 in the frequency range of 100 Hz to 1 500 Hz (see 11.4.8).

(For frequencies below 100 Hz, the runout shall be as specified in 11.4.7).

Sectors containing accelerations above 1 500 Hz shall be considered defective and shall be relocated according to the rules of defect management defined in clause 17.

20.9 Tracking Gain

The Tracking Gain is defined as the magnitude, expressed in dB, of the open-loop frequency response measured at 3 kHz with the Reference Tracking Servos defined in 11.4.6 and 11.4.8 (see also annex K.2.3).

Typical Tracking Gain-multipliers defined as a multiplying factor to be applied to the measured tracking axial and radial error signals in the tracking servo loops, determined for internal radius IR, middle radius MR and outer radius OR during manufacturing of the disk, shall be recorded in the SDI (see 18.3.2).

The tolerance of the small signal gain with respect to the typical SDI recorded gains shall be less than 1,0 dB.

The local variations of the small signal gain shall be less than 0,5 dB.

© ISO/IEC 2001 – All rights reserved

Copyright International Organization for Standardization
Provided by IHS under license with ISO
No reproduction or networking permitted without license from IHS
Not for Resale

Section 5 — Characteristics of the recording layer

21 Method of testing

Clauses 21.1 to 21.4 describe a series of tests to assess the properties of the Recording layer, as used for writing and reading data. The tests shall be performed in the Recording Fields of the Test Regions dedicated to write testing on each side of the disk. The write and read operations necessary for the tests shall be made on the same Reference Drive.

Clause 22 specifies only the average quality of the recording layer. Local deviations from the specified values, called defects, can cause write problems. These defects are covered in section 6.

21.1 Test Regions

There are three Test Regions for write testing on each side of the disk:

Test Region 1 is at the inner radius, in the Lead-in Zone, from Track -20 to Track -4.

Test Region 2 is at the middle radius, starting at Track 42 189. This is in the WPC Region (see 18.2) and is shared with drive calibration.

Test Region 3 is at the outer radius, in the Lead-out zone, from Track 84 368 to Track 84 400.

These Test Regions are available to the media manufacturers for performing the write sensitivity testing of the media. If necessary, more tracks in the Lead-in Zone and Lead-out Zone may be used for additional write testing.

21.2 Environment

All signals in clause 22 shall be within their specified ranges with the cartridge in any environment in the range of allowed operating environments defined in 8.1.2.

21.3 Use of the Reference Drive

The write tests described in clause 22 shall be measured in Channel 1 of the Reference Drive. The drive shall have the following characteristics for the purpose of these tests.

21.3.1 Optics and mechanics

The focused optical beam shall have the properties defined in 9.2 a) to e). The disk shall rotate as specified in 9.5.

21.3.2 Read power

The optical power incident on the entrance surface of the disk and used for reading the information shall be the Optimum Read Power $P_{r\,opt}$ recorded in the SDI (see 18.3.2).

21.3.3 Read Channel

The Reference Drive shall have a Read Channel that can detect marks in the recording layer. This channel shall have an implementation equivalent to that given by Channel 1 in 9.3.

The edge positions of the data signal shall be measured for testing purposes by a combination of the threshold and so-called SISIC methods as defined in annex J. The threshold value is referenced to the centre of the peak to peak of the read out signal in each Recorded Reference Field (see 14.9).

21.3.4 Tracking

During the measurement of the signals, the focus of the optical beam shall follow the track as specified in 19.2.4.3.

21.4 Write conditions

The requirement for all tests shall be met over the operating environment except where otherwise noted.

21.4.1 Write pulse

Marks are recorded on the disk by pulses of optical power synchronized with the data clock.

The pulse shape for the purpose of testing will be a nominally rectangular pulse as shown in figure L.1 of annex L with duration T_p and peak power P_w.

Each mark shall be written by an initial $T_p = 1T$ pulse followed by a succession of $T_p = T/2$ pulses separated by $T/2$ spaces, as shown by figure L.2 of annex L, with boosts and droops depending of the data sequence and the recording Zone, as defined in 21.4.4.

© ISO/IEC 2001 – All rights reserved
Copyright International Organization for Standardization
Provided by IHS under license with ISO
No reproduction or networking permitted without license from IHS
Not for Resale

T_p is the full width, half-maximum duration of the light pulse. T_p shall be measured by a high-speed photo detector at the output of the laser. T varies with Data Zone (see 15.3.1). The tolerances of T_p shall be ± 10% T_p with a 10 % to 90 % rise and fall time of less than 10 % T_p.

The measurement of laser power shall be done in pulsed operation by averaging, for example one pulse every 50 ns, using a spherical radiometer. The averaging method of measuring the laser power will minimize the accumulation of pulse width and pulse amplitude tolerances.

The values of P_w used in any media tests shall be as defined in 21.4.3.

21.4.2 Nominal Write Power $P_{w\ nom}$

The Nominal Write Power $P_{w\ nom}$ is defined as the write power at which readable data is recorded with optimal amplitude margin for worst case data patterns, including worst case crosstalk from both adjacent tracks.

$P_{w\ nom}$ shall not exceed 15 mW anywhere in the User Area.

The maximum allowed change of $P_{w\ nom}$ over the specified lifetime for writing shall be +15 % to –5 %.

21.4.3 Nominal Write Power $P_{w\ nom}$ determination

$P_{w\ nom}$ for each disk side shall be calibrated by writing in the Write Power Calibration (WPC) Region in Data Zone 8. Each WPC execution consumes 1 Sector. Hence each disk side allows 32 670 WPCs.

The media manufacturer will measure the average $P_{w\ nom}$ per track in the three Test Regions defined in 21.1 and write these three $P_{w\ nom}$ in the SDI as defined in 18.3.2. This $P_{w\ nom}$ information for inner, middle and outer radii, enables the drive to set the write power for each Data Zone by means of interpolation.

The WPC pattern is generated by writing a data pattern of alternating (AAAA) and (EEEE).

This data pattern results in alternating Channel bit strings of 3*T* and 2*T*.

The WPC pattern shall be also used for Read Focus Optimization (see 18.4).

21.4.4 Writing Power boosts and droops

For Cold Burns, defined as written marks preceded by unwritten gaps larger than 3*T*, the peak power of the initial writing pulse shall be increased (boost) as specified in bytes 22, 23, 24 of the SDI for the different Zones 0, 8, 15 (see 18.3, annexes H and L).

For Long Marks, defined as written marks longer than 6*T*, the peak power of the two last writing pulses shall be reduced (droop) as specified in bytes 25, 26, 27 of the SDI for the different Zones 0, 8, 15 (see 18.3, annexes H and L).

For 6*T* marks, only the peak power of the last writing pulse shall be reduced as specified here above.

21.4.5 Write Media Profile

The Write Media Profile specifies the media sensitivity profile of the media in intermediate Zones 0 to 15. This profile is defined by multipliers by which the linearly interpolated values of $P_{w\ nom}$ as defined for each Zone in 21.4.3 shall be multiplied. These multipliers shall be defined by bytes 32 to 47 of the SDI (see 18.3 and annex H).

22 Write characteristics

22.1 Signal modulation

The signal amplitude of Long Marks (marks of duration larger than 6*T*) shall be at least larger than 30 % of the base line reflectivity.

22.2 Signal Resolution

The signal amplitude of 2*T* marks shall be at least larger than 15 % of the Long Marks amplitude.

22.3 Write power margin

The write power margin is defined as the write power range over which sectors can be recorded with a maximum of 2 bytes errors per code word. The write power margin shall be at least $P_{w\ nom} \pm 25$ % in each of the 16 Data Zones.

© ISO/IEC 2001 – All rights reserved

Copyright International Organization for Standardization
Provided by IHS under license with ISO
No reproduction or networking permitted without license from IHS
Not for Resale

Section 6 — Characteristics of user data

23 Method of testing

Clauses 24 and 25 describe a series of measurements to test conformance of the user data on the disk with this International Standard. It checks the legibility of both pre-written and user-written data. The data is assumed to be arbitrary. The user-written data may have been written by any drive in any environment. The read tests shall be performed on the Reference Drive.

Whereas clauses 19 to 22 disregard defects, clauses 24 and 25 include them as unavoidable deterioration of the read signals. The gravity of a defect is determined by the correctability of the ensuing errors by the error detection and correction circuit in the read channel defined below. The requirements in clauses 24 and 25 define a minimum quality of the data, necessary for data interchange.

23.1 Environment

All signals specified in clauses 24 and 25 shall be within their specified ranges with the cartridge in any environment in the range of allowed operating environments defined in 8.1.2. It is recommended that before testing, the entrance surface of the optical disk shall be cleaned according to the instructions of the manufacturer of the disk.

23.2 Use of the Reference Drive

All signals specified in clauses 24 and 25 shall be measured in the indicated channel of the Reference Drive. The drive shall have the following characteristics for the purpose of these tests:

23.2.1 Optics and mechanics

The focused optical beam shall have the properties specified in 9.2 a) to e). The disk shall rotate as specified in 9.5.

23.2.2 Read power

The optical power incident on the entrance surface of the disk (used for reading the information) shall be the Optimum Read Power $P_{r\,opt}$ recorded in the SDI (see 18.3.2).

23.2.3 Read channel

The Reference Drive shall have a Read Channel that can detect marks in the recording layer. This channel shall have an implementation equivalent to that given by Channel 1 in 9.3.

The edge positions of the data signal shall be measured for testing purposes by a combination of the threshold and so-called SISIC methods as defined in annex J. The threshold value is referenced to the centre of the peak to peak of the read out signal in each Recorded Reference Field (see 14.9).

23.2.4 Error correction

Correction of errors in the data bytes shall be carried out by error detection and correction system based on the definition of the CRC and ECC of annex G.

23.2.5 Tracking

The tracking channel shall have an implementation equivalent to that given by Channel 2 in 9.4.

During the measurement of the signals, the focus of the optical beam shall follow the track as specified in 19.2.4.3.

24 Minimum quality of a Sector

This clause specifies the minimum quality of the Servo Fields and Recordable Fields of a Sector as required for interchange of the data contained in that Sector. The quality shall be measured on the Reference Drive specified in 23.2.

A byte error occurs when one or more bits in a byte have a wrong setting, as detected by ECC and/or CRC circuits.

24.1 Servo Fields

An unwritten Sector shall have no more than 2 consecutive Frames with a defect, as defined hereafter, in its Servo Fields. Any sector which fails to meet this criterion shall be mapped into the defect list.

Defects in the Servo Fields shall be defined as follows:

– Individual BOS and Clock Marks amplitudes lower than 75 % of the mean value for the disk,

– Axial tracking error signal variation between successive Frames larger than 0,25 μm,

– QWT signal showing a centre sample amplitude lower than the average of the amplitudes of adjacent samples,

– Two successive unreadable addresses.

© ISO/IEC 2001 – All rights reserved
Copyright International Organization for Standardization
Provided by IHS under license with ISO
No reproduction or networking permitted without license from IHS
Not for Resale

24.2 User-written data

The user-written data in a sector as read by Channel 1 shall not contain any byte errors that cannot be corrected by error correction defined in 23.2.4.

24.3 Pre-written data

The pre-written data in a sector as read by Channel 1 shall not contain any byte errors that cannot be corrected by error correction defined in 23.2.4.

25 Data interchange requirements

A disk offered for interchange of data shall comply with the following requirements (see also annex K).

25.1 Tracking

The focus of the optical beam shall not jump tracks unintentionally.

25.2 User-written and pre-written data

The user-written or pre-written data in a sector as read by Channel 1 that shall not comply with 24.2 and 24.3 shall be replaced according to the rules of the defect management as defined in clause 17.

25.3 Quality of disk

The quality of the disk is reflected in the number of replaced Sectors in the Data Zones. This International Standard allows a maximum of 7 400 Static and 14 800 Dynamic replaced Sectors per side (see clause 17).

© ISO/IEC 2001 – All rights reserved

Copyright International Organization for Standardization
Provided by IHS under license with ISO
No reproduction or networking permitted without license from IHS
Not for Resale

Annex A
(normative)

Air cleanliness class 100 000

The classification of air cleanliness is based on a particle count with a maximum allowable number of specified minimum sized particles per unit volume, and on a statistical average particle size distribution.

A.1 Definition

The particle count shall not exceed a total of 3 500 000 particles per cubic metre of a size 0,5 μm and larger.

The statistical average particle size distribution is given in figure A.1. Class 100 000 means that 3 500 000 particles per cubic metre of a size of 0,5 μm and larger are allowed, but only 25 000 particles per cubic metre of a size of 5,0 μm and larger.

It shall be recognized that single sample distribution may deviate from this curve because of local or temporary conditions. Counts below 350 000 particles per cubic metre are unreliable except when a large number of a samplings is taken.

A.2 Test method

For particles of size in the range of 0,5 μm to 5,0 μm, equipment employing light-scattering principles shall be used. The air in the controlled environment is sampled at a known flow rate. Particles contained in the sampled air are passed through an illuminated sensing zone in the optical chamber of the instrument. Light scattered by individual particles is received by a photo detector that converts the light pulses into electrical current pulses. An electronic system relates the pulse height to particle size and counts the pulses such that the number of particles in relation to particle size is registered or displayed.

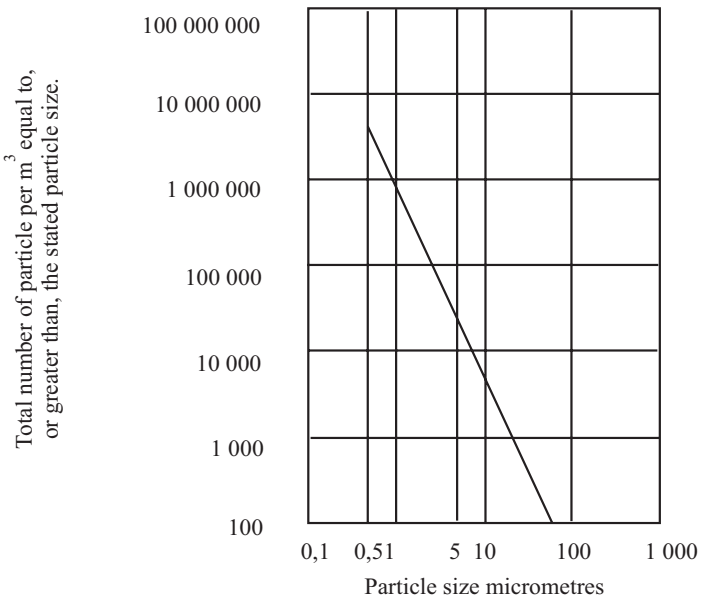

Figure A.1 — Particle size distribution curve

© ISO/IEC 2001 – All rights reserved
Copyright International Organization for Standardization
Provided by IHS under license with ISO
No reproduction or networking permitted without license from IHS
Not for Resale

Annex B
(normative)

Edge distortion test

B.1 The distortion test checks if the case is free from unacceptable distortion and protrusions along its edges. The test is made by causing the cartridge to pass through the vertical slot of a gauge while applying a specified force in addition to the gravitational pull.

B.2 The gauge shall be made of a suitable material, e.g. of chrome-plated carbon steel. The inner surfaces shall be polished to a surface finish of 5 μm peak-to-peak.

B.3 The dimensions shall be as follows (see figure B.1):

L_a = 350,0 mm

L_b = 321,0 mm ± 0,2 mm

L_c = 12,0 mm ± 0,2 mm

L_d = 17,0 mm ± 0,2 mm

L_e = 25 mm min.

B.4 When the cartridge is inserted vertically into the gauge, a vertical downward force F of 6,7 N maximum, applied to the centre of the top edge of the cartridge, shall cause the cartridge to pass through the gauge.

© ISO/IEC 2001 – All rights reserved

Copyright International Organization for Standardization
Provided by IHS under license with ISO
No reproduction or networking permitted without license from IHS
Not for Resale

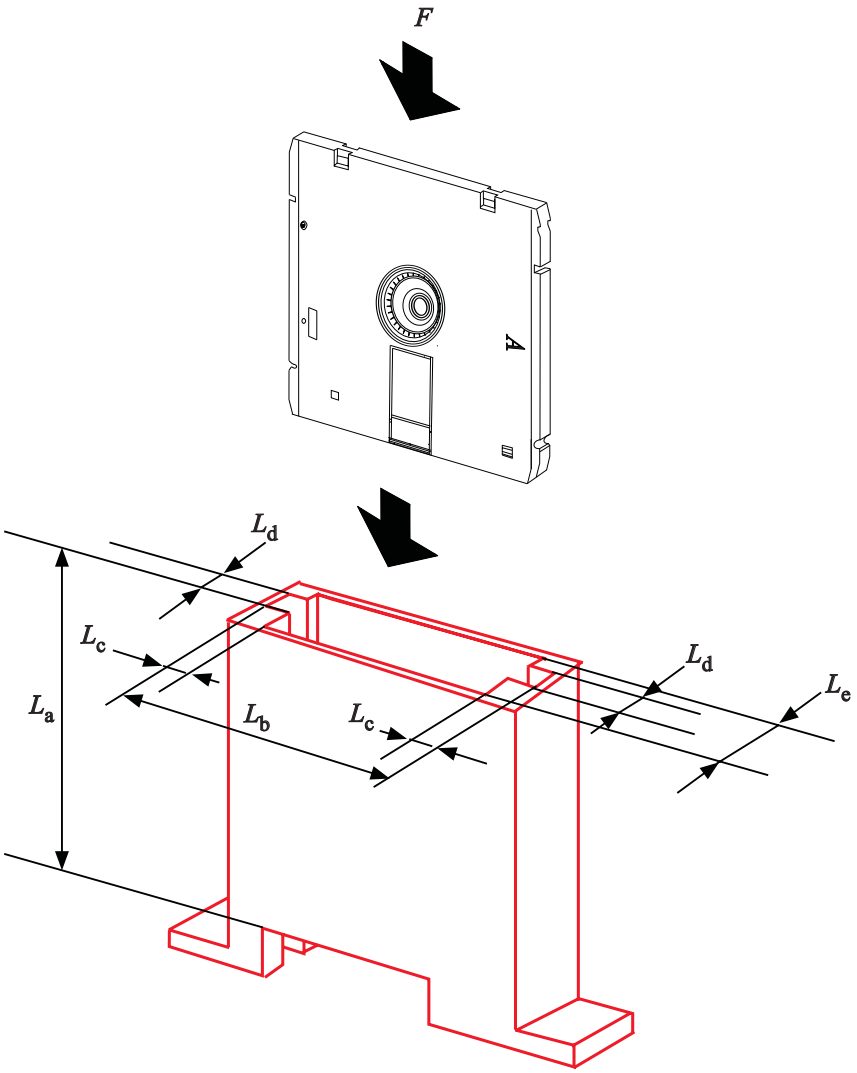

Figure B.1 — Distortion gauge

--`,,```,,,,````-`-`,,`,,`,`,,`---
Copyright International Organization for Standardization
Provided by IHS under license with ISO
No reproduction or networking permitted without license from IHS
Not for Resale
© ISO/IEC 2001 – All rights reserved

Annex C
(normative)

Compliance test

C.1 In non-operating conditions the flexible walls of the case shall contact the disk hub around the hub aperture area so that to close this aperture. The compliance test checks the flexibility of the case, used to liberate the hub from the case walls contact during loading in the drive.

C.2 The long edges AA', BB', CC', DD' of the case (see figure C.1) shall be held horizontally between the rigid guide rails of figure C.2 defined by

L_f = 10,0 mm ± 1,0 mm

L_g = 16 mm ± 0,2 mm

and the four surfaces S defined on each side of the case, by (see figure C.3)

D_a = 4,0 mm ± 0,2 mm

L_h = 72,0 mm ± 0,2 mm

L_i = 168,0 mm ± 0,2 mm

L_j = 54,6 mm ± 0,1 mm

shall be brought to the positions shown on figure C.4 below the plane Q_a (AA',BB') and above the plane Q_b (CC', DD'), defined by

L_k = 0,75 mm ± 0,20 mm

C.3 Requirements

Under the conditions of C.2, the total reaction force exerted by the four surfaces of each side shall not exceed 4 N.

© ISO/IEC 2001 – All rights reserved

Copyright International Organization for Standardization
Provided by IHS under license with ISO
No reproduction or networking permitted without license from IHS
Not for Resale

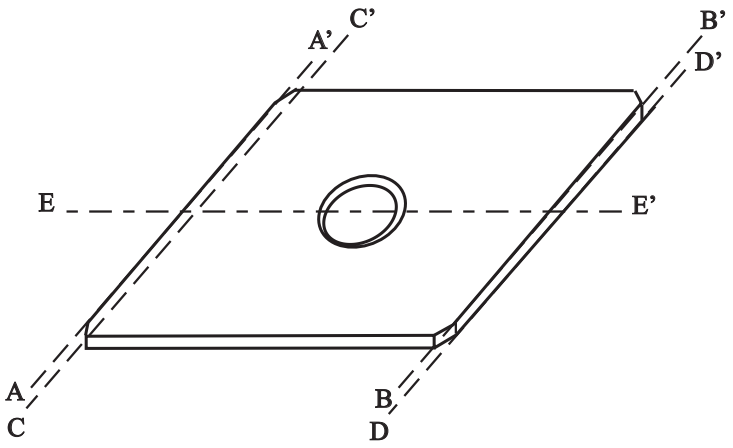

Figure C.1 — Long edges AA', BB', CC', DD' of the case

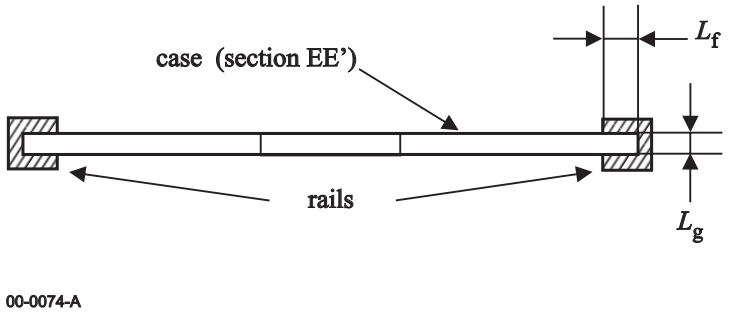

Figure C.2 — Position of the case in the guide rails

© ISO/IEC 2001 – All rights reserved
Copyright International Organization for Standardization
Provided by IHS under license with ISO
No reproduction or networking permitted without license from IHS
Not for Resale

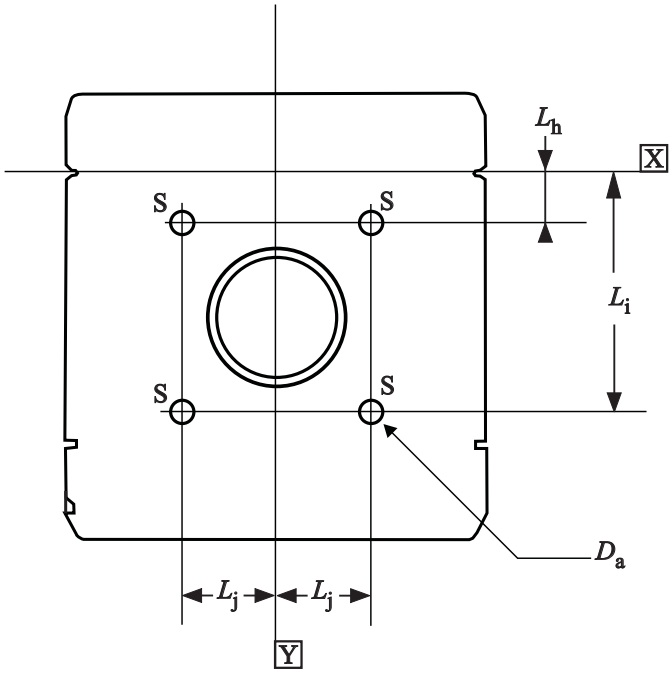

Figure C.3 — Positions and dimensions of Surfaces S

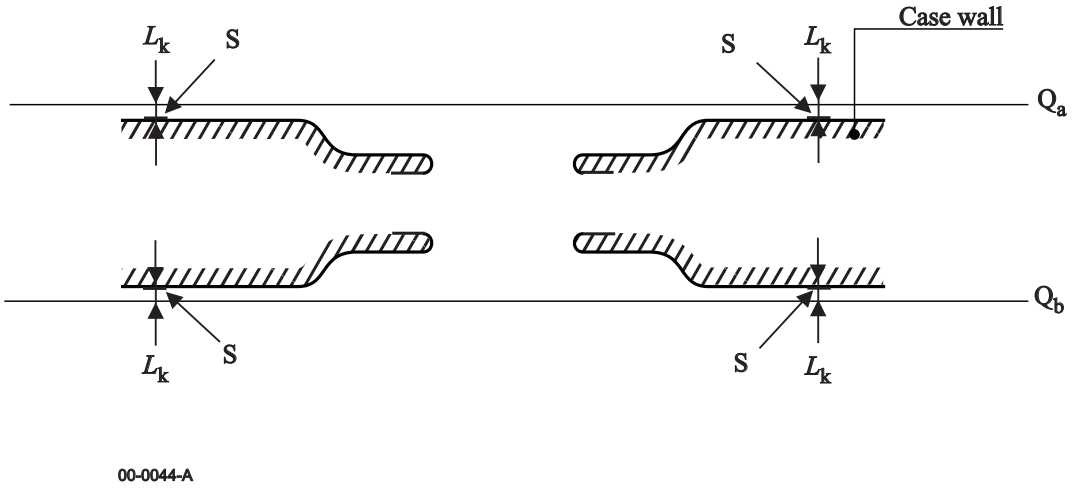

Figure C.4 — Position of case walls during compliance test

© ISO/IEC 2001 – All rights reserved
Copyright International Organization for Standardization
Provided by IHS under license with ISO
No reproduction or networking permitted without license from IHS
Not for Resale

Annex D
(normative)

Test method for measuring the adsorbent force of the hub

D.1 The purpose of this test is to determine the magnetic characteristic of the magnetizable material of the hub.

D.2 Dimensions

The test device (see figure D.1) consists of a spacer, a magnet, a back yoke and a centre shaft. The dimensions of test device are as follows:

D_b = 50,0 mm ± 0,1 mm

D_c = 76,0 mm ± 0,1 mm

D_d = 70 mm max.

D_e = $36{,}0\ ^{+\ 0{,}0\ \text{mm}}_{-\ 0{,}1\ \text{mm}}$

H_a = 0,40 mm ± 0,01 mm

H_b = 6 mm (typical, to be adjusted to meet the force requirement of D.4)

D.3 Material

The material of the test device shall be :

Magnet : Any magnetizable material, typically Sm-Co
Back yoke : Any suitable magnetizable material
Spacer : Non-magnetizable material or air gap
Centre shaft : Non-magnetizable material

D.4 Characteristics of the magnet with back yoke

Number of poles: 12 (typical)

Maximum energy product (Bh_{max}): 300 kJ/m^3 ± 15 J/m^3

The characteristics of the magnet with back yoke shall be adjusted so that with a pure nickel plate of the following dimensions (see figure D.2), and the adsorbent force of this plate at the point of H_c = 0,4 mm when spaced from the magnet surface shall be 11 N ± 1 N.

D_f = 50,0 mm ± 0,1 mm

D_g = 70,0 mm ± 0,1 mm

H_c = 2,00 mm ± 0,05 mm

D.5 Test condition for temperature

These conditions shall be as specified in 8.1.1.

© ISO/IEC 2001 – All rights reserved
Copyright International Organization for Standardization
Provided by IHS under license with ISO
No reproduction or networking permitted without license from IHS
Not for Resale

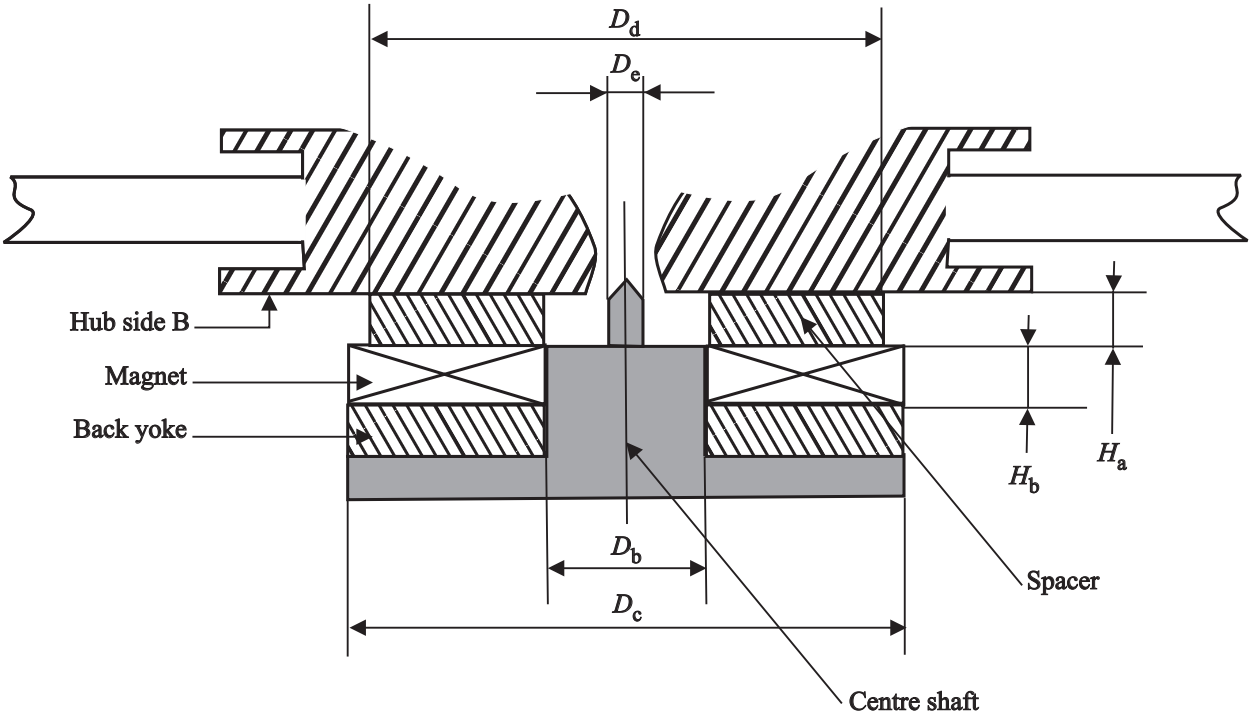

Figure D.1 — Test device for the clamping characteristic of the hub

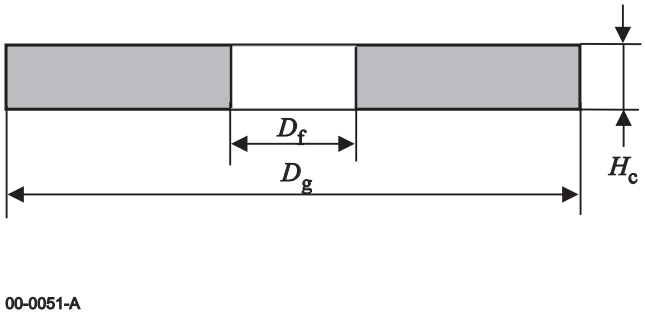

Figure D.2 — Calibration plate of the test device

© ISO/IEC 2001 – All rights reserved
Copyright International Organization for Standardization
Provided by IHS under license with ISO
No reproduction or networking permitted without license from IHS
Not for Resale

Annex E
(normative)

Creeping One of Four Code (COF)

The following table gives the mark-positions for all 256 combinations in one address byte constituted of 4 nibles J, K, L, M, with numbers 0, 1, 2, 3 representing mark positioned respectively at 40, 41, 42, 43 of the SCb scale (see figure 15).

Number	J K L M	Number	J K L M	Number	J K L M	Number	J K L M
0	0 0 0 0	64	1 3 0 0	128	2 0 0 0	192	3 3 0 0
1	0 0 0 1	65	1 3 0 1	129	2 0 0 1	193	3 3 0 1
2	0 0 0 2	66	1 3 0 2	130	2 0 0 2	194	3 3 0 2
3	0 0 0 3	67	1 3 0 3	131	2 0 0 3	195	3 3 0 3
4	0 0 1 3	68	1 3 1 3	132	2 0 1 3	196	3 3 1 3
5	0 0 1 2	69	1 3 1 2	133	2 0 1 2	197	3 3 1 2
6	0 0 1 1	70	1 3 1 1	134	2 0 1 1	198	3 3 1 1
7	0 0 1 0	71	1 3 1 0	135	2 0 1 0	199	3 3 1 0
8	0 0 2 0	72	1 3 2 0	136	2 0 2 0	200	3 3 2 0
9	0 0 2 1	73	1 3 2 1	137	2 0 2 1	201	3 3 2 1
10	0 0 2 2	74	1 3 2 2	138	2 0 2 2	202	3 3 2 2
11	0 0 2 3	75	1 3 2 3	139	2 0 2 3	203	3 3 2 3
12	0 0 3 3	76	1 3 3 3	140	2 0 3 3	204	3 3 3 3
13	0 0 3 2	77	1 3 3 2	141	2 0 3 2	205	3 3 3 2
14	0 0 3 1	78	1 3 3 1	142	2 0 3 1	206	3 3 3 1
15	0 0 3 0	79	1 3 3 0	143	2 0 3 0	207	3 3 3 0
16	0 1 3 0	80	1 2 3 0	144	2 1 3 0	208	3 2 3 0
17	0 1 3 1	81	1 2 3 1	145	2 1 3 1	209	3 2 3 1
18	0 1 3 2	82	1 2 3 2	146	2 1 3 2	210	3 2 3 2
19	0 1 3 3	83	1 2 3 3	147	2 1 3 3	211	3 2 3 3
20	0 1 2 3	84	1 2 2 3	148	2 1 2 3	212	3 2 2 3
21	0 1 2 2	85	1 2 2 2	149	2 1 2 2	213	3 2 2 2
22	0 1 2 1	86	1 2 2 1	150	2 1 2 1	214	3 2 2 1
23	0 1 2 0	87	1 2 2 0	151	2 1 2 0	215	3 2 2 0
24	0 1 1 0	88	1 2 1 0	152	2 1 1 0	216	3 2 1 0
25	0 1 1 1	89	1 2 1 1	153	2 1 1 1	217	3 2 1 1
26	0 1 1 2	90	1 2 1 2	154	2 1 1 2	218	3 2 1 2
27	0 1 1 3	91	1 2 1 3	155	2 1 1 3	219	3 2 1 3
28	0 1 0 3	92	1 2 0 3	156	2 1 0 3	220	3 2 0 3
29	0 1 0 2	93	1 2 0 2	157	2 1 0 2	221	3 2 0 2
30	0 1 0 1	94	1 2 0 1	158	2 1 0 1	222	3 2 0 1
31	0 1 0 0	95	1 2 0 0	159	2 1 0 0	223	3 2 0 0
32	0 2 0 0	96	1 1 0 0	160	2 2 0 0	224	3 1 0 0
33	0 2 0 1	97	1 1 0 1	161	2 2 0 1	225	3 1 0 1
34	0 2 0 2	98	1 1 0 2	162	2 2 0 2	226	3 1 0 2
35	0 2 0 3	99	1 1 0 3	163	2 2 0 3	227	3 1 0 3
36	0 2 1 3	100	1 1 1 3	164	2 2 1 3	228	3 1 1 3
37	0 2 1 2	101	1 1 1 2	165	2 2 1 2	229	3 1 1 2
38	0 2 1 1	102	1 1 1 1	166	2 2 1 1	230	3 1 1 1
39	0 2 1 0	103	1 1 1 0	167	2 2 1 0	231	3 1 1 0
40	0 2 2 0	104	1 1 2 0	168	2 2 2 0	232	3 1 2 0
41	0 2 2 1	105	1 1 2 1	169	2 2 2 1	233	3 1 2 1
42	0 2 2 2	106	1 1 2 2	170	2 2 2 2	234	3 1 2 2
43	0 2 2 3	107	1 1 2 3	171	2 2 2 3	235	3 1 2 3
44	0 2 3 3	108	1 1 3 3	172	2 2 3 3	236	3 1 3 3
45	0 2 3 2	109	1 1 3 2	173	2 2 3 2	237	3 1 3 2
46	0 2 3 1	110	1 1 3 1	174	2 2 3 1	238	3 1 3 1
47	0 2 3 0	111	1 1 3 0	175	2 2 3 0	239	3 1 3 0
48	0 3 3 0	112	1 0 3 0	176	2 3 3 0	240	3 0 3 0
49	0 3 3 1	113	1 0 3 1	177	2 3 3 1	241	3 0 3 1
50	0 3 3 2	114	1 0 3 2	178	2 3 3 2	242	3 0 3 2
51	0 3 3 3	115	1 0 3 3	179	2 3 3 3	243	3 0 3 3
52	0 3 2 3	116	1 0 2 3	180	2 3 2 3	244	3 0 2 3
53	0 3 2 2	117	1 0 2 2	181	2 3 2 2	245	3 0 2 2
54	0 3 2 1	118	1 0 2 1	182	2 3 2 1	246	3 0 2 1
55	0 3 2 0	119	1 0 2 0	183	2 3 2 0	247	3 0 2 0
56	0 3 1 0	120	1 0 1 0	184	2 3 1 0	248	3 0 1 0
57	0 3 1 1	121	1 0 1 1	185	2 3 1 1	249	3 0 1 1
58	0 3 1 2	122	1 0 1 2	186	2 3 1 2	250	3 0 1 2
59	0 3 1 3	123	1 0 1 3	187	2 3 1 3	251	3 0 1 3
60	0 3 0 3	124	1 0 0 3	188	2 3 0 3	252	3 0 0 3
61	0 3 0 2	125	1 0 0 2	189	2 3 0 2	253	3 0 0 2
62	0 3 0 1	126	1 0 0 1	190	2 3 0 1	254	3 0 0 1
63	0 3 0 0	127	1 0 0 0	191	2 3 0 0	255	3 0 0 0

© ISO/IEC 2001 – All rights reserved
Copyright International Organization for Standardization
Provided by IHS under license with ISO
No reproduction or networking permitted without license from IHS
Not for Resale

Annex F
(normative)

PBA, LBA formats

F.1 PBA format

The PBA format shall be as defined in table F.1.

PBAs 0 to 7 469 071 cover Side A and PBAs 7 469 072 to 14 938 143 cover Side B.

Table F.1 — PBA format

PBA	Side	Track	Sector
0	A	- 256	0
1	A	- 256	1
:	:	:	:
7 469 071	A	84 622	111
7 469 072	B	- 256	0
7 469 073	B	- 256	1
:	:	:	:
14 938 143	B	84 622	111

F.2 LBA format

LBAs shall be assigned to alternating Sectors of each side. The alternating shall associate Zones of each side (in order to maintain a constant data rate across the radius of the disk), as defined in sequences 1 to 16 given in table F.2, where sides A and B are identified by A and B, respectively.

LBA 0 shall be assigned to Side A, Track 0, Sector 0. LBA 1 shall be assigned to side B, Track 0, Sector *n*, where *n* is the value defined in byte 57 of the SDI. Following LBAs shall be assigned using successively the sequences 1 to 16:

LBA	Side	Track	Sector
0	A	0	0
1	B	0	*n*
2	B	0	*n*+1
3	A	0	1
4	B	0	*n*+2
5	B	0	*n*+3
6	A	0	2
7	B	0	*n*+4
8	B	0	*n*+5
9	A	0	3
...	...	...	...

When arriving at the end of a sequence the assignment shall resume at the beginning of the sequence and this shall be repeated until all LBAs of the two associated Zones have been assigned.

This alternating shall successively cover associated Zones 0-15, 1-14, 2-13, etc., as defined by the sequences of table F.2.

© ISO/IEC 2001 – All rights reserved

Copyright International Organization for Standardization
Provided by IHS under license with ISO
No reproduction or networking permitted without license from IHS
Not for Resale

Table F.2 — Alternating sequences

Sequence 1 associating Zones 0, A and 15, B	Sequence 9 associating Zones 8, A and 7, B
A B B A B B A B B A B B A B A B B A B B A B B A B B A B B A B B A B B A B A B B A B B A B A B B A B B A B B A B B A B A B B A B B A B B A B A B B A B B A B B A B A B B A B B A B B A B A B B A B B A B B A B B A B A B B A B B A B A B B A B B A B B A B B A B A B B A B B A B B A B A B B A B B A B B A B A B B A B B A B B A B	A B A B A B A B A B A B A B A B A B A B A B A B A B A B A B A B A B A B A B A B A B A B A B A B A B A B A B A A B A B A B A B A B A B A B A B A B A B A B A B A B A B A B A B A B A B A B A B A B A B A B A B A A B A B A B A B A B A B A B A B A B A B A B A B A B A B A B A B A B A B A B A B A B A B A B A B A B A A B
Sequence 2 associating Zones 1, A and 14, B	**Sequence 10 associating Zones 9, A and 6, B**
A B B A B B A B A B B A B B A B A B B A B B A B A B B A B A B B A B B A B A B B A B B A B A B B A B B A B A B B A B B A B A B B A B B A B A B B A B B A B B A B A B B A B B A B A B B A B A B B A B A B B A B B A B A B B A B B A B A B B A B B A B A B B A B A B B A B B A B A B B A B B A B A B B A B B A B A B A B	A B A B A B A B A B A B A B A B A A B A B A B A B A B A B A A B A B A B A B A B A B A B A B A A B A B A B A B A B A A B A B A B A B A B A B A B A B A A B A B A B A B A B A A B A B A B A B A B A B A B A B A A B A B A B A B A B A A B A B A B A B A B A B A B A B A A B A B A B A B A B A A B A B A B A B A B A B A
Sequence 3 associating Zones 2, A and 13, B	**Sequence 11 associating Zones 10, A and 5, B**
A B B A B A B	A B A B A B A B A B A B A A B A B A B A B A B A A B A B A B A B A A B A B A B A B A B A A B A B A B A B A B A A B A B A B A A B A B A B A B A B A A B A B A B A B A A B A B A B A B A A B A B A B A B A A B A B A B A B A A B A B A B A B A B A A B A B A B A B A A B A B A B A B A A B A B A B A B A B A A B A B A B A
Sequence 4 associating Zones 3, A and 12, B	**Sequence 12 associating Zones 11, A and 4, B**
A B B A B A B B A B A B A B B A B A B B A B A B A B B A B A B A B B A B A B B A B A B A B B A B A B B A B A B B A B A B B A B A B A B B A B A B B A B A B A B B A B A B A B A B B A B A B B A B A B A B B A B A B B A B A B A B B A B A B A B B A B A B A B A B B A B A B A B B A B A B A B A B A B B A B A B B A B A	A B A B A B A B A A B A B A B A A B A B A B A A B A B A A B A B A B A A B A B A B A A B A B A B A B A A B A B A A B A B A A B A B A B A A B A B A B A A B A B A B A A B A B A A B A B A B A A B A B A B A A B A B A B A A B A B A A B A B A A B A B A B A B A B A A B A B A B A A B A B A B A B A A B A B A B A B A B A
Sequence 5 associating Zones 4, A and 11, B	**Sequence 13 associating Zones 12, A and 3, B**
A B B A B A B A B B A B A B A B B A B A B A B B A B A B A B B A B A B A B B A B A B A B B A B A B A B B A B A B A B B A B A B A B B A B A B A B B A B A B A B B A B A B A B B A B A B A B B A B A B A B A B A B A B A B A B A B A B A B A B A B A B A B A B A B B A B A B A B A B A B A B A B A B A B A B A B A B A B A B A B A B A B A B	A B A B A B A A B A B A B A A B A B A A B A B A B A A B A B A A B A B A B A A B A B A A B A B A B A A B A B A A B A B A A B A B A A B A B A B A A B A B A A B A B A B A A B A B A A B A B A A B A B A B A B A A B A B A A B A B A B A A B A B A A B A B A B A B A A B A B A B A B A A B A B A A B A B A B A A B A B A A B A B A B A A B A
Sequence 6 associating Zones 5, A and 10, B	**Sequence 14 associating Zones 13, A and 2, B**
A B B A B A B A B A B B A B A B A B A B B A B A B A B A B A B B A B A B A B A B B A B A B A B A B B A B A B A B A B A B B A B A B A B A B B A B A B A B A B B A B A B A B A B A B B A B A B A B A B B A B A B A B A B B A B A B A B A B A B B A B A B A B A B A B A B A B A B B A B A B A B A B A B A B B A B A B A	A B A B A A B A B A A B A B A A B A B A A B A B A A B A B A A B A B A A B A B A A B A B A A B A B A A B A B A A B A B A A B A A B A B A A B A B A A B A B A A B A B A A B A B A A B A A B A B A A B A B A A B A B A A B A B A A B A B A A B A B A B A A B A B A A B A B A A B A B A A B A B A A B A B A A B A B A B A A B A B A A B A
Sequence 7 associating Zones 6, A and 9, B	**Sequence 15 associating Zones 14, A and 1, B**
A B B A B A B A B A B A B A B B A B A B A B A B A B A B A B B A B A B A B A B A B A B B A B A B A B A B A B A B A B B A B A B A B A B A B A B B A B A B A B A B A B A B A B B A B A B A B A B A B A B B A B A B A B A B A B A B A B B A B A B A B A B A B A B B A B A B A B A B A B A B A B B A B A B A B A B A B A	A B A B A A B A B A A B A B A A B A B A A B A B A A B A B A B A A B A A B A B A A B A B A A B A B A A B A B A A B A B A A B A B A A B A B A A B A B A A B A B A A B A B A A B B A A B A B A A B A B A A B A B A A B A B A A B A B A A B A B A A B A A B A B A A B A B A A B A B A A B A B A A B B A B A A B A A B A B A
Sequence 8 associating Zones 7, A and 8, B	**Sequence 16 associating Zones 15, A and 0, B**
A B B A B A B A B A B A B A B A B A B A B A B A B A B A B A B A B A B A B A B A B A B A B A B A B A B B A B A B A B A B A B A B A B A B A B A B A B A B A B A B A B A B A B A B A B A B A B A B A B A B A B A B A B B A B A B A B A B A B A B A B A B A B A B A B A B A B A B A B A B A B A B A B A B A B A B A B	A B A B A A B A A B A B A B A A B A A B A B A A B A A B A A B A A B A B A A B A A B A B A A B A A B A B A A B A B A A B A A B A A B A B A B A A B A A B A B A A B A A B A A B A A B A B A A B A A B A B A A B A A B A B A A B A B A A B A A B A A B A B A B A A B A A B A B A A B A A B A A B A B A A B A A B A

Copyright International Organization for Standardization
Provided by IHS under license with ISO
No reproduction or networking permitted without license from IHS
Not for Resale
© ISO/IEC 2001 – All rights reserved

Annex G
(normative)

Interleave, CRC, ECC

G.1 Interleave table for Sector

The bytes of a Sector shall be interleaved as shown in table G.1.

Code Word Offset	Hex	Dec	R/W Direction →				User Data ↓					
↓	(00)	0	000	001	002	003	004	005	006	007	008	009
	(01)	1	00A	00B	00C	00D	00E	00F	010	011	012	013
	(02)	2	014	015	016	017	018	019	01A	01B	01C	01D
	(03)	3	01E	01F	020	021	022	023	024	025	026	027
	(04)	4	028	029	02A	02B	02C	02D	02E	02F	030	031
	(05)	5	032	033	034	035	036	037	038	039	03A	03B
	(06)	6	03C	03D	03E	03F	040	041	042	043	044	045
	(07)	7	046	047	048	049	04A	04B	04C	04D	04E	04F
	(08)	8	050	051	052	053	054	055	056	057	058	059
	(09)	9	05A	05B	05C	05D	05E	05F	060	061	062	063
	(0A)	10	064	065	066	067	068	069	06A	06B	06C	
	(0B)	11	06E	06F	070	071	072	073	074	075		
	(0C)	12	078	079	07A	07B	07C	07D	07E			
	(0D)	13	082	083	084	085	086	087				
	(0E)	14	08C	08D	08E	08F	090					
	(0F)	15	096	097	098	099						
	(10)	16	0A0	0A1	0A2							
	(11)	17	0AA	0AB								
	(12)	18	0B4									
	.	.										
	.	.										
	.	.										
	(C1)	193										793
	(C2)	194									79C	79D
	(C3)	195								7A5	7A6	7A7
	(C4)	196							7AE	7AF	7B0	7B1
	(C5)	197						7B7	7B8	7B9	7BA	7BB
	(C6)	198					7C0	7C1	7C2	7C3	7C4	7C5
	(C7)	199				7C9	7CA	7CB	7CC	7CD	7CE	7CF
	(C8)	200			7D2	7D3	7D4	7D5	7D6	7D7	7D8	7D9
	(C9)	201		7DB	7DC	7DD	7DE	7DF	7E0	7E1	7E2	7E3
	(CA)	202	7E4	7E5	7E6	7E7	7E8	7E9	7EA	7EB	7EC	7ED
	(CB)	203	7EE	7EF	7F0	7F1	7F2	7F3	7F4	7F5	7F6	7F7
	(CC)	204	7F8	7F9	7FA	7FB	7FC	7FD	7FE	7FF	800	801
	(CD)	205	802	803	804	805	806	807	808	809	80A	80B
	(CE)	206	80C	80D	80E	80F	810	811	812	813	814	815
	(CF)	207	816	817	818	819	81A	81B	81C	81D	81E	81F
	(D0)	208	820	821	822	823	824	825	826	827	828	829
	(D1)	209	82A	82B	82C	82D	82E	82F	830	831	832	833
	(D2)	210	834	835	836	837	838	839	83A	83B	83C	83D
	(D3)	211	83E	83F	840	841	842	843	844	845	846	847
	(D4)	212	848	849	84A	84B	84C	84D	84E	84F	850	851
	(D5)	231	852	853	854	855	856	857	858	859	85A	85B
	(D6)	214	85C	85D	85E	85F	860	861	862	863	864	865
	(D7)	215	866	867	868	869	86A	86B	86C	86D	86E	86F
	(D8)	216	870	871	872	873	874	875	876	877	878	879
	(D9)	217	87A	87B	87C	87D	87E	87F	880	881	882	883
	(DA)	218	884	885	886	887	888	889	88A	88B	88C	88D
	(DB)	219	88E	88F	890	891	892	893	894	895	896	897
	(DC)	220	898	899	89A	89B	89C	89D	89E	89F	8A0	8A1
	(DD)	221	8A2	8A3	8A4	8A5	8A6	8A7	8A8	8A9	8AA	8AB
	(DE)	222	8AC	8AD	8AE	8AF	8B0	8B1	8B2	8B3	8B4	8B5
Code Word →			1	2	3	4	5	6	7	8	9	10
							Control Record				CRC	

Table G.1 — Interleave table

© ISO/IEC 2001 – All rights reserved

Copyright International Organization for Standardization
Provided by IHS under license with ISO
No reproduction or networking permitted without license from IHS
Not for Resale

G.2 ECC

The ECC check bytes shall be computed over the Galois field based on the primitive polynomial

$$G_p(x) = x^8 + x^4 + x^3 + x^2 + 1$$

The generator polynomial for the ECC bytes shall be

$$G_e(x) = \prod_{i=0}^{i=15} \left(x + \alpha^i\right)$$

where the element $\alpha^i = (\beta^i)^{88}$, with β being a primitive root of $G_p(x)$. The value of the n-th bit in a byte is the coefficient of the n-th power of β, where $0 \le n \le 7$, when β is expressed on a polynomial basis.

G.3 CRC

The primitive polynomial and elements shall be the same as in G.2.

The generator polynomial for the CRC check bytes shall be

$$G_c(x) = \prod_{i=20}^{i=23} \left(x + \alpha^i\right)$$

The initial setting shall be all ZERO's.

--`,,```,,,,````-`-`,,`,,`,`,,`---
© ISO/IEC 2001 – All rights reserved
Copyright International Organization for Standardization
Provided by IHS under license with ISO
No reproduction or networking permitted without license from IHS
Not for Resale

Annex H
(normative)

Content of SDI Sectors

Each SDI Sector shall specify the following.

Byte 0

This byte shall specify the SDI revision version. For this International Standard, this byte shall be set to (01).

Byte 1

This byte shall specify the product version. For this International Standard, this byte shall be set to (08).

Byte 2

This byte shall specify the identification of the Servo-writer used to format the disk. Its setting shall be defined by the manufacturer.

Byte 3

This byte shall specify the identification of the Media tester used to derive media characteristics recorded in the SDI. Its setting shall be defined by the manufacturer.

Bytes 4 to 7

These bytes shall specify the date of the test of the media in a format Year (bytes 4,5), Month (byte 6), Day (byte 7).

Bytes 8 to 11

These bytes shall specify the identification number of the Optical Module Assembly of the Media tester used to derive media characteristics recorded in the SDI.

Byte 12

This byte shall specify the clock signal amplitude expressed in binary notation by a number n representing 100 times the ratio of the typical values of the Clock Mark amplitude signal I_c and the nominal reflection amplitude level I_o (see figure 17)

$n = 100 \times I_c / I_o$

Byte 13

This byte shall specify the data signal amplitude expressed in binary notation by a number n representing 100 times the ratio of the typical values of the data mark amplitude signal I_d and the nominal reflection amplitude level I_o

$n = 100 \times I_d / I_o$

Byte 14

This byte shall specify the Optimum Read Power $P_{r\ opt}$ in milliwatts, by a number

$n = 100 \times P_{r\ opt}$

Byte 15

This byte shall specify the Maximum Read Power $P_{r\ max}$ in milliwatts, expressed in binary notation by a number

$n = 100 \times P_{r\ max}$

Byte 16

This byte shall specify the Tracking Gain Multiplier T_{gm} for the inner radius, expressed in binary notation by a number

$n = 100 \times T_{gm} / (64)$

© ISO/IEC 2001 – All rights reserved

Copyright International Organization for Standardization
Provided by IHS under license with ISO
No reproduction or networking permitted without license from IHS
Not for Resale

Byte 17

This byte shall specify the Tracking Gain Multiplier T_{gm} for the middle radius, expressed in binary notation by a number

$n = 100 \times T_{gm} /(64)$

Byte 18

This byte shall specify the Tracking Gain Multiplier T_{gm} for the outside radius, expressed in binary notation by a number

$n = 100 \times T_{gm} /(64)$

Byte 19

This byte shall specify the Focus Gain Multiplier for the inner radius expressed in binary notation. For this Standard, this byte shall be set to (64) (=100%).

Byte 20

This byte shall specify the Focus Gain Multiplier for the middle radius, expressed in binary notation. For this Standard, this byte shall be set to (64) (=100%).

Byte 21

This byte shall specify the Focus Gain Multiplier for the outer radius, expressed in binary notation. For this Standard, this byte shall be set to (64) (=100%).

Byte 22

This byte shall specify the Write Power Boost for Cold Burns of Data Zone 0, expressed in binary notation by a number

n = (64) ×. Write Power Boost for Data Zone 0

Byte 23

This byte shall specify the Write Power Boost for Cold Burns of Data Zone 8, expressed in binary notation by a number

n = (64) × Write Power Boost for Data Zone 8

Byte 24

This byte shall specify the Write Power Boost for Cold Burns of Data Zone 15, expressed in binary notation by a number

n = (64) × Write Power Boost for Data Zone 15

Byte 25

This byte shall specify the Write Power Droop for Long Marks of Data Zone 0, expressed in binary notation by a number

n = (64) × Write Power Droop for Data Zone 0

Byte 26

This byte shall specify the Write Power Droop for Long Marks of Data Zone 8, expressed in binary notation by a number

n = (64) × Write Power Droop for Data Zone 8

Byte 27

This byte shall specify the Write Power Droop for Long Marks of Data Zone 15, expressed in binary notation by a number

n = (64) . Write Power Droop for Data Zone 15

Byte 28

This byte shall specify the Nominal Write Power $P_{w\ nom}$ in milliwatts for Data Zone 8, expressed in binary notation by a number

$n = 10 \times P_{w\ nom}$

Byte 29

This byte shall specify the Nominal Write Power $P_{w\ nom}$ for Data Zone 0, expressed in binary notation by a number

n = (64) × $P_{w\ nom}$ for Data Zone 8 / $P_{w\ nom}$ for Data Zone 0

--`,,```,,,,````-`-`,,`,,`,`,,`---

© ISO/IEC 2001 – All rights reserved
Copyright International Organization for Standardization
Provided by IHS under license with ISO
No reproduction or networking permitted without license from IHS
Not for Resale

Byte 30

This byte shall specify the Nominal Write Power $P_{w\ nom}$ for Data Zone 8, expressed in binary notation by a number

$n = (64) \times P_{w\ nom} / P_{w\ nom}$ for Data Zone 8

This byte shall be set to (64).

Byte 31

This byte shall specify the Nominal Write Power $P_{w\ nom}$ for Data Zone 15, expressed in binary notation by a number

$n = (64) \times P_{w\ nom}$ for Data Zone 8 / $P_{w\ nom}$ for Data Zone 15

Bytes 32 to 47

These bytes shall specify the Write Power Media Profile, by a number n used to multiply the linearly interpolated value of the Nominal Write Power $P_{w\ nom}$ of each Zone determined from the Nominal Write Power $P_{w\ nom}$ of Zones 0, 8, 15, to derive the actual Write Power $P_{w\ nom}$ of the Zone

$n = (64) \times P_{w\ nom}$ actual / $P_{w\ nom}$ linearly interpolated

Bytes 48 to 55

This byte shall specify a media identification in the form of eight 7-Bits coded ISO/IEC 646 (IRV) characters.

Byte 56

This byte shall specify the side A, B, in the form of one 7-Bit coded ISO/IEC 646 LATIN CAPITAL LETTER A or B character.

Byte 57

This byte shall specify the misalignment of Sector 0 of side B relative to Sector 0 of side A, expressed in number of segment units.

Bytes 58 to 63

These bytes are not used and shall be set to (00).

Bytes 64 to *n*

These bytes shall specify bad Sector maps.

Each defect range of these maps shall be specified by

– an error code of 1 byte set as defined by table 9,

– a start track number of 3 bytes,

– a number of bad tracks of the range of 2 bytes,

– a start Sector number of 1 byte,

– a number of bad Sector of the range of 1 byte.

Bytes *n* to 2039

These bytes correspond to the remainder of the bad Sector maps area. These bytes shall all be set to (00).

Bytes 2040 and 2041

These bytes shall specify the number of bad sectors listed in the map defined in bytes 64 to 2039.

Bytes 2042 and 2043

These bytes are not used and shall be set to (00).

Bytes 2044 and 2045

These bytes shall specify a check sum computed on bytes 0 to 2043.

© ISO/IEC 2001 – All rights reserved

Copyright International Organization for Standardization
Provided by IHS under license with ISO
No reproduction or networking permitted without license from IHS
Not for Resale

Annex J
(normative)

SISIC (Selective Inter Symbol Interference Cancellation) data detection

The slice level detection method is used to make a preliminary data detection decision on all data samples, but the SISIC data detection scheme described hereafter may overrule this decision.

The slice level for each frame is determined by the reference byte pattern at the beginning of each data frame.

Selective ISI Cancellation searches for the 2T marks and spaces in the digitized readout signal from encoded data. Those samples identified as 2T marks or spaces are then considered clear logical ONEs or logical ZEROs. Any channel bit value as defined by the slice level detection for those signal samples is then overruled.

SISIC decides on the logical value for digitized sample N by comparing its value with samples N-2 and N+2, as specified hereafter.

Waveform of figure J.1 shows a possible worst-case situation, because the 2T space (samples C and D) is preceded by a long mark and the 2T mark (E and F) is followed by a long space. It also shows a slice-level, which in this (realistic) case is not controlled at the optimal level for the 2T waveforms.

In figure J.1, the samples C and D are recognized as a 2T space because the following SISIC conditions are all met:

C is lower than A

C is lower than E

D is lower than B

D is lower than F

Likewise the samples E and F are recognized as a 2T mark because the following conditions are all met:

E is greater than C

E is greater than G

F is greater than D

F is greater than H

So even though samples C and D are above the slice level, they are turned into logical ZEROs by the SISIC detection scheme. These “SISIC ZEROs” are shown as triangles, while the “SISIC ONEs" are shown as squares. All other samples are shown as dots.

Samples A and B are considered logical ONEs because they are above the slice level.

Samples G and H are considered logical ZEROs because they are below the slice level.

© ISO/IEC 2001 – All rights reserved
Copyright International Organization for Standardization
Provided by IHS under license with ISO
No reproduction or networking permitted without license from IHS
Not for Resale

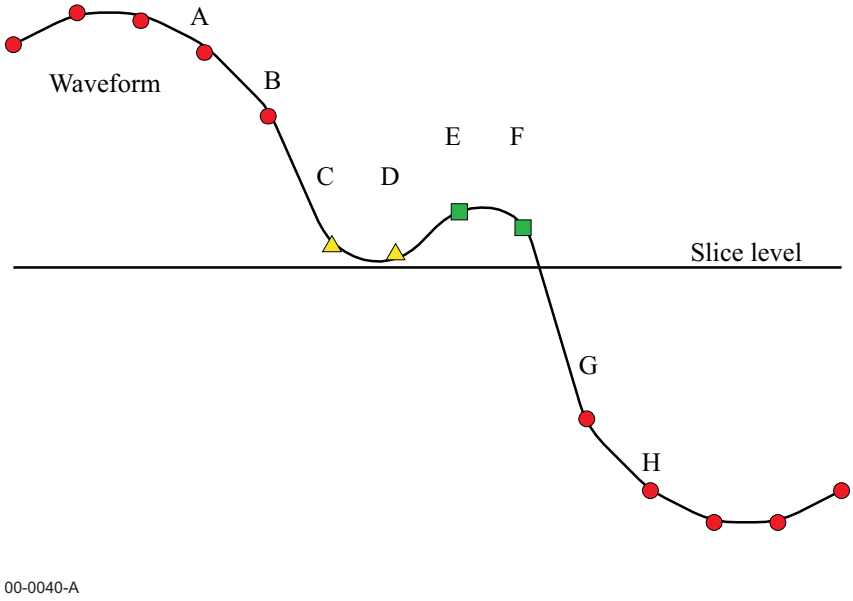

Figure J.1 — Example of readout waveform and SISIC detection

© ISO/IEC 2001 – All rights reserved
Copyright International Organization for Standardization
Provided by IHS under license with ISO
No reproduction or networking permitted without license from IHS
Not for Resale

Annex K
(normative)

Requirements for interchange

K.1 Equipment for writing

The disk under test shall have been written with arbitrary data by a disk drive for data interchange use in the operating environment.

K.2 Test equipment for reading

K.2.1 General

The read test shall be performed on a test drive in the test environment. The rotational frequency and direction of rotation of the disk when reading shall be as defined in 9.5.

K.2.2 Read Channel

K.2.2.1 Characteristics of the optical beam

The optical beam used for reading shall comply with the requirements of 9.2 a) to e).

K.2.2.2 Read power

The read power shall comply with the requirements of 9.3.

K.2.2.3 Optics

The optical head used for reading shall comply with the requirements of annex K.

K.2.2.4 Read amplifier

The read amplifier after the photo detector in Channel 1 shall have a flat response from d.c. to 30 MHz within 1 dB.

K.2.2.5 Analog to binary conversion

The signals from the read amplifier shall be converted from analog to binary. The converter shall work properly for signals from recorded marks with properties as defined in clause 20.

K.2.2.6 Binary-to-digital conversion

The binary signal shall be converted to a digital signal according to the rules of the recording code.

K.2.3 Tracking

The open-loop transfer function for the axial and radial tracking servo shall be

$$H = \frac{(2\pi f_0)^2}{\mathrm{c}s^2}\left(\frac{1+\dfrac{s\mathrm{c}}{2\pi f_0}}{1+\dfrac{s}{2\pi f_0 \mathrm{c}}}\right)$$

where $s = \mathrm{i}2\pi f$, within an accuracy such that $|1+H|$ does not deviate by more than 20% from its nominal value in a bandwidth from 50 Hz to 10 kHz.

The constant c shall be 3. The open-loop 0 dB frequency f_0 shall be 1 115 Hz for the axial servo and 1 700 Hz for the radial servo. The open-loop d.c. gain of the axial servo shall be at least 80 dB.

K.3 Requirements for the digital read signals

A byte error is defined by a byte in which one or more bits have a wrong setting, as detected by the error detection and correction circuit.

© ISO/IEC 2001 – All rights reserved
Copyright International Organization for Standardization
Provided by IHS under license with ISO
No reproduction or networking permitted without license from IHS
Not for Resale

K.3.1 Any sector accepted as valid during the writing process shall not contain byte errors after the error correction circuit.

K.3.2 Any sector not accepted as valid during the writing process shall have been rewritten according to the rules for defect management.

K.4 Requirements for the digital servo signals

The focus of the optical beam shall not jump tracks voluntarily.

K.5 Requirement for interchange

An interchanged optical disk cartridge meets the requirements for interchangeability if it meets the requirements of K.3 and K.4 when it is written on an interchange drive according to K.1 and read on a test drive according to K.2.

--`,,```,,,,````-`-`,,`,,`,`,,`---

© ISO/IEC 2001 – All rights reserved

Copyright International Organization for Standardization
Provided by IHS under license with ISO
No reproduction or networking permitted without license from IHS
Not for Resale

Annex L
(normative)

Shape and sequence of write pulses for testing

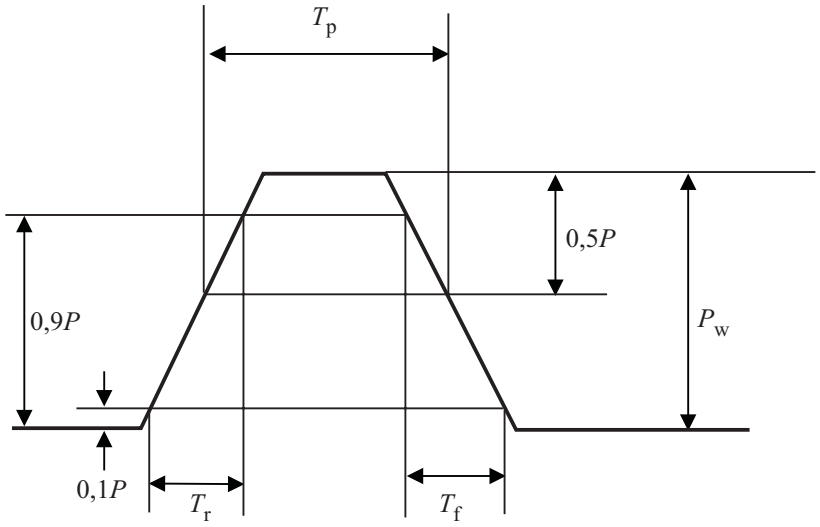

00-0017-A

where: P_w : Write power, T_f : Fall time, T_r : Rise time, T_p : Write pulse width

Figure L.1 — Shape of individual pulses

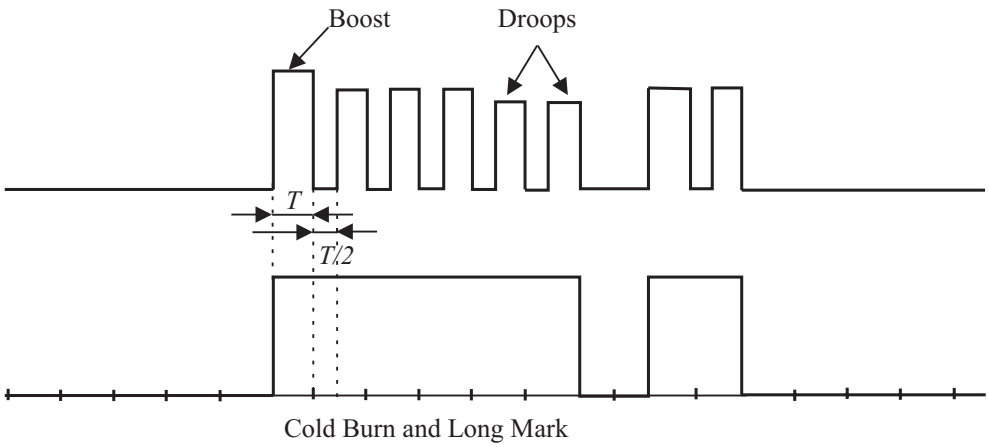

00-0049-A

Figure L.2 — Pulses sequence within marks, with boosts and droops

Copyright International Organization for Standardization
Provided by IHS under license with ISO
No reproduction or networking permitted without license from IHS
Not for Resale
© ISO/IEC 2001 – All rights reserved

Annex M
(informative)

Office environment

M.1 Air cleanliness

Due to their construction and mode of operation optical disk cartridges have considerable resistance to the effects of dust particles around and inside the disk drive. Consequently it is not generally necessary to take special precautions to maintain a sufficiently low concentration of dust particles.

Operation in heavy concentrations of dust should be avoided e.g. in a machine shop or on a building site.

Office environment implies an environment in which personnel may spend a full working day without protection and without suffering temporary or permanent discomfort.

M.2 Effects of operation

In the office environment (as well as other environments) it is possible for an optical disk drive to degrade the quality of written marks if the read power is applied to a single track for a long period of time. This would happen if a media in a drive remains loaded, the drive remains in the ready status, and is in jump-back mode on one particular track. If this occurs at the maximum operating temperature (55°C), the marks on the media may be degraded. The media manufacturer's selection of the value for the maximum read powers allowed in the User Zone as well as the optical drive manufacturer's read power management method should reflect this possibility and be designed to minimize any risk to data integrity.

© ISO/IEC 2001 – All rights reserved

Copyright International Organization for Standardization
Provided by IHS under license with ISO
No reproduction or networking permitted without license from IHS
Not for Resale

Annex N
(informative)

Derivation of the operating climatic environment

This annex gives some background on how some of the conditions of the operating environment in 8.1.2 have been derived.

N.1 Standard climatic environment classes

The conditions of the ODC operating environment are, with a few exceptions mentioned below, based on parameter values of the IEC standard climatic environment class 3K3 described in IEC publication 721-3-3. This publication defines environmental classes for stationary use of equipment at weather-protected locations.

The IEC class 3K3 refers to climatic conditions which

"... may be found in normal living or working areas, e.g. living rooms, rooms for general use (theatres restaurants etc.), offices, shops, workshops for electronic assemblies and other electrotechnical products, telecommunication centres, storage rooms for valuable and sensitive products."

N.2 Overtemperature considerations

While IEC class 3K3 defines the limits for the room climate only, the ODC operating environment specification in this International Standard takes into consideration also system and drive overtemperature. This means that when inserted in a drive, the ODC will sense a temperature that is above the ambient room temperature. The figures in the operating environment specification have been calculated from the assumption that overtemperature may be up to 20°C.

N.3 Absolute humidity

The introduction of the parameter

absolute humidity(unit: g water / m^3 of air)

is very useful when studying overtemperature. When the temperature rises inside a drive, the relative humidity goes down but the absolute humidity remains substantially constant. So, making room for overtemperature in the operating environment specification affects not only the upper temperature limit but also the lower relative humidity limit. The relationship between these parameters is shown in the climatogram (the relative humidity vs. temperature map) of the ODC operating environment, figure N.1.

The absolute humidity restrictions influence the operating environment in the following two ways:

i. Combination of high temperatures and high relative humidities are excluded. Such combinations could have negative influence on the performance and the life of ODCs.

ii. Combinations of low temperatures and low relative humidities are excluded. Such combinations are very unlikely to occur in worldwide normal office environments.

N.4 Deviations from the IEC standard environment class

Apart from the change introduced by the overtemperature considerations above, there are a few more parameter values which are not based on IEC class 3K3. These are:

– Atmospheric pressure

The IEC 3K3 lower limit of 70 kPa has been extended to 60 kPa. ODCs according to this International Standard show no intrinsic pressure sensitivity and 70 kPa excludes some possible markets for ODCs.

– Absolute humidity

The IEC 3K3 value for the upper limit of 25 g/m^3 has been raised to 30 g/m^3 in view of some expected operation in portable devices outside the controlled office environment.

© ISO/IEC 2001 – All rights reserved
Copyright International Organization for Standardization
Provided by IHS under license with ISO
No reproduction or networking permitted without license from IHS
Not for Resale

– Temperature

The maximum temperature around the ODC, i.e. room temperature plus overtemperature, has been limited to 55 °C (while IEC 3K3 + 20 °C would have become 60 °C). For ODCs according to this International Standard, however, the 55°C limit is considered to be a physical limit above which operation (as well as storage) is not safe.

This means that equipment designers may want to ensure adequate cooling inside the drive especially when the room temperature approaches the upper IEC 3K3 limit of 40°C.

– Further

The rates of change (the gradients) of temperature and relative humidity are not according to IEC 3K3.

N.5 Wet bulb temperature specifications

Instead of specifying limits for the absolute humidity, some of the earlier standards for ODCs as well as those for other digital data storage media often use restrictions of the parameter

wet bulb temperature (unit: °C)

in order to avoid too severe combinations of high temperatures and high relative humidities.

In order to facilitate comparisons between different specifications, figure N.2 and table N.1 show wet bulb temperatures of interest for the ODC operating environment, as well as for the testing and storage environments. Since wet bulb temperatures vary slightly with the atmospheric pressure, the diagram is valid for the normal pressure of 101,3 kPa only.

--`,,```,,,,````-`-`,,`,,`,`,,`---

© ISO/IEC 2001 – All rights reserved

Copyright International Organization for Standardization
Provided by IHS under license with ISO
No reproduction or networking permitted without license from IHS
Not for Resale

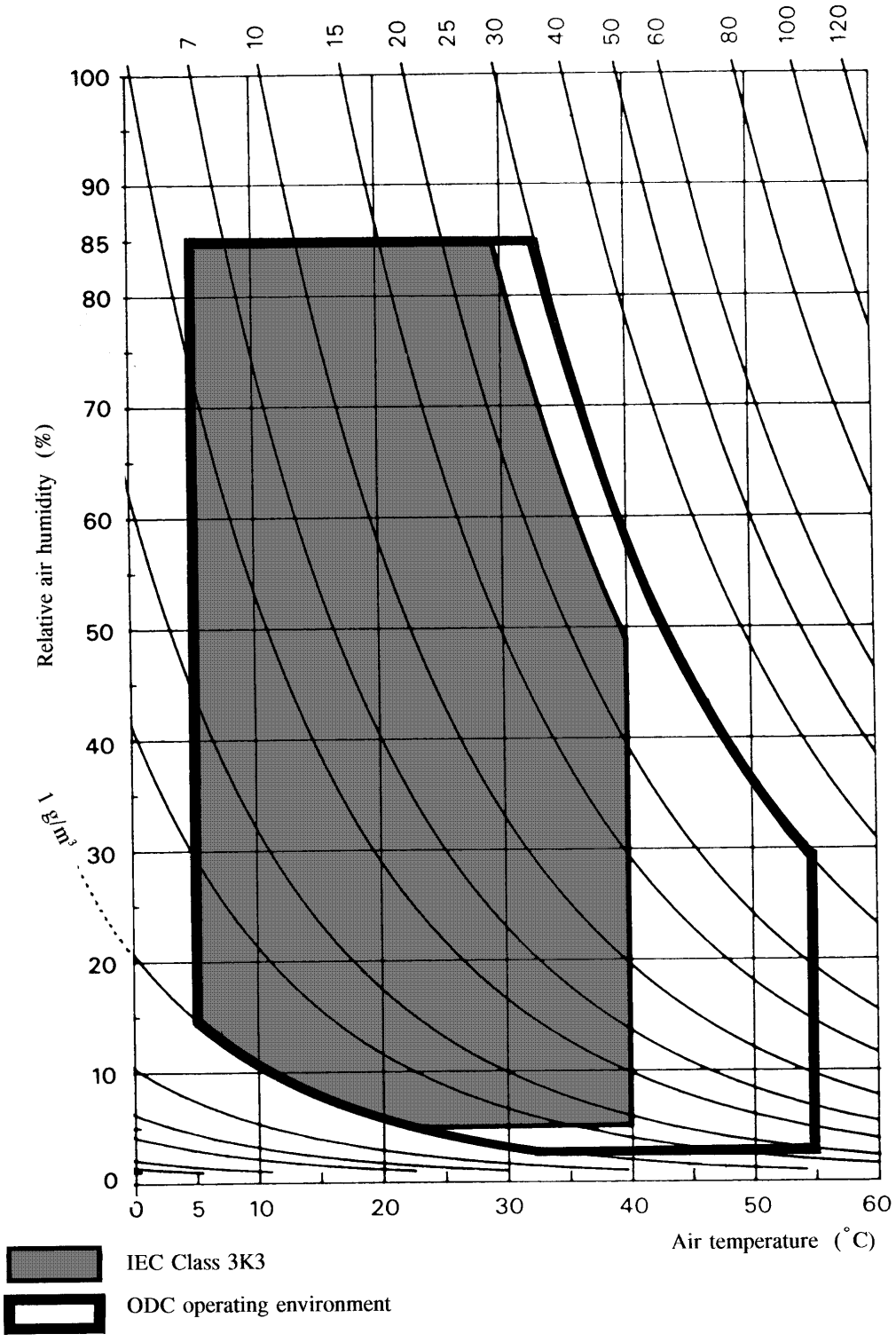

Figure N.1 — Climatogram of IEC Class 3K3 and the ODC operating environment

© ISO/IEC 2001 – All rights reserved
Copyright International Organization for Standardization
Provided by IHS under license with ISO
No reproduction or networking permitted without license from IHS
Not for Resale

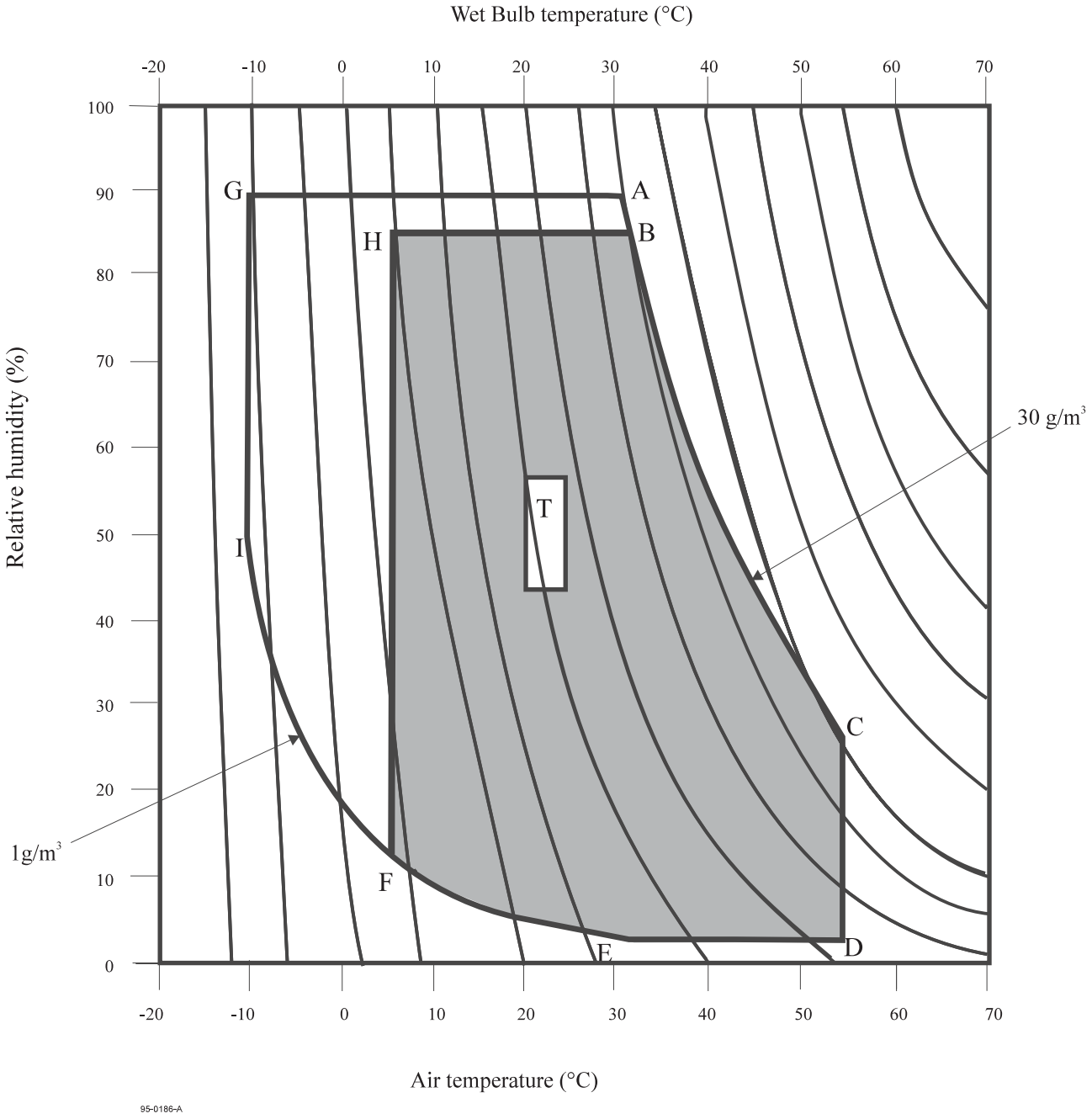

Figure N.2 — Wet bulb temperatures of the operating and storage environments

The points A to I and area T are defined in table N.1.

© ISO/IEC 2001 – All rights reserved

Copyright International Organization for Standardization
Provided by IHS under license with ISO
No reproduction or networking permitted without license from IHS
Not for Resale

Table N.1 — Position of the main points of Figure N.2

	Air temperature °C	**Relative humidity %**	**Wet bulb temperature °C**
A	31,7	90,0	30,3
B	32,8	85,0	30,6
C	55,0	28,8	35,5
D	55,0	3,0	22,2
E	31,7	3,0	12,1
F	5,0	14,7	-1,4
G	-10,0	90,0	-10,3
H	5,0	85,0	3,9
I	10,0	46,8	-11,6
Test environment (T)	$23,0^{o}$ C ± $2,0^{o}$ C	50,0% ± 5,0%	---
Storage environment	is determined by A-B-C-D-E-F-G		
Operating environment	is determined by B-C-D-E-F-H		

© ISO/IEC 2001 – All rights reserved
Copyright International Organization for Standardization
Provided by IHS under license with ISO
No reproduction or networking permitted without license from IHS
Not for Resale

Annex P
(informative)

Transportation

P.1 General

As transportation occurs under a wide range of temperature and humidity variations, for differing periods, by many methods of transport and in all parts of the world it is not possible to specify conditions for transportation or for packaging.

P.2 Packaging

The form of packaging should be agreed between sender and recipient or, in the absence of such agreement, is the responsibility of the sender. It should take account of the following hazards.

P.2.1 Temperature and humidity

Insulation and wrapping should be designed to maintain the conditions for storage over the estimated period of transportation.

P.2.2 Impact loads and vibration

Avoid mechanical loads that would distort the shape of the cartridge.

Avoid dropping the cartridge.

Cartridges should be packed in a rigid box containing adequate shock absorbent material.

The final box should have a clean interior and a construction that provide sealing to prevent the ingress of dirt and moisture.

© ISO/IEC 2001 – All rights reserved

Copyright International Organization for Standardization
Provided by IHS under license with ISO
No reproduction or networking permitted without license from IHS
Not for Resale

Annex Q
(informative)

Track deviation measurement

The deviation of a track from its nominal location is measured in the same way as a drive sees a track, i.e. through a tracking servo. The strength of the Reference Servo used for the test is in general less that the strength of the same servo in a normal drive. The difference in strength is intended for margins in the drive. The deviation of the track is related to the tracking error between the track and the focus of the optical beam, remaining after the Reference Servo. The tracking error directly influences the performance of the drive, and is the best criterion for testing track deviations.

The specification of the axial and radial deviations can be described in the same terms. Therefore, this annex applies to both axial and radial track deviations.

Q.1 Relation between requirements

The acceleration required by the motor of the tracking servo to make the focus of the optical beam follow the tracks on the disk (see 11.4.6 and 11.4.8) is a measure for the allowed deviations of the tracks. An additional measure is the allowed tracking error between the focus and the track (see 19.2.4.3). The relation between both is given in figure Q.1 where the maximum allowed amplitude of a sinusoidal track deviation is given as a function of the frequency of the deviation. It is assumed in the figure that there is only one sinusoidal deviation present at a time.

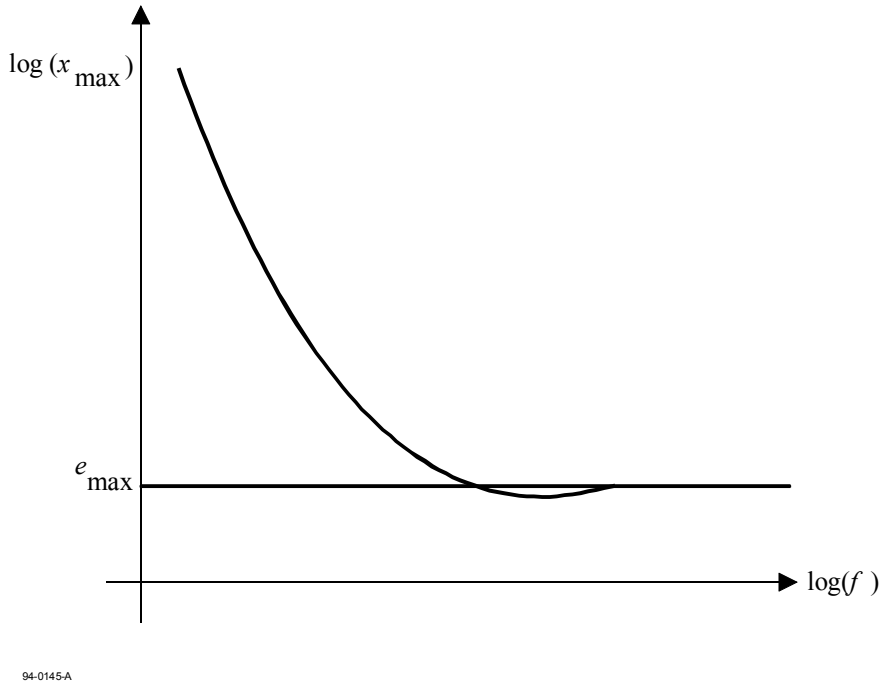

Figure Q.1 — Maximum allowed amplitude of a single sinusoidal track deviation

At low frequencies the maximum allowed amplitude x_{max} is given by

$$x_{max} = x_{max} / (2\pi f)^2, \quad (1)$$

where x_{max} is the maximum acceleration of the servo motor.

At high frequencies the maximum allowed amplitude x_{max} is given by

$$x_{max} = e_{max} \quad (2)$$

where e_{max} is the maximum allowed tracking error. The connection between both frequency regions is given in Q.3.

© ISO/IEC 2001 – All rights reserved
Copyright International Organization for Standardization
Provided by IHS under license with ISO
No reproduction or networking permitted without license from IHS
Not for Resale

Q.2 Reference Servo

The above restrictions of the track deviations are equal to the restriction of the track deviations for a Reference Servo. A Reference Servo has a well-defined transfer function, and reduces a single, sinusoidal track deviation with amplitude x_{max} to a tracking error e_{max} as in figure Q.1.

The open-loop transfer function of the Reference Servo shall be

$$H_s(\mathrm{i}\omega) = \frac{1}{\mathrm{c}}\left(\frac{\omega_0}{\mathrm{i}\omega}\right)^2 \frac{1+\dfrac{\mathrm{i}\omega\mathrm{c}}{\omega_0}}{1+\dfrac{\mathrm{i}\omega}{\mathrm{c}\omega_0}} \qquad (3)$$

where $\mathrm{i} = \sqrt{-1}$, $\omega = 2\pi f$ and $\omega_0 = 2\pi f_0$, with f_0 the 0 dB frequency of the open-loop transfer function. The constant c gives the cross-over frequencies of the lead-lag network of the servo: the lead break frequency $f_2 = \dfrac{f_0}{\mathrm{c}}$ and the lag break frequency $f_2 = f_0 \times \mathrm{c}$. The reduction of a track deviation x to a tracking error e by the Reference Servo is given by

$$\frac{e}{x} = \frac{1}{1+H_s} \qquad (4)$$

If the 0 dB frequency is specified as

$$\omega_0 = \sqrt{\frac{a_{max}\,\mathrm{c}}{e_{max}}} \qquad (5)$$

then a low-frequency track deviation with an acceleration a_{max} will be reduced to a tracking error e_{max}, and a high frequency track deviation will not be reduced. The curve in figure Q.1 is given by

$$x_{max} = e_{max}\ |1+H_s| \qquad (6)$$

The maximum acceleration required from the motor of this Reference Servo is

$$a_{max}\,(motor) = e_{max}\ \omega^2\ |1+H_s| \qquad (7)$$

At low frequencies $f < \dfrac{f_0}{\mathrm{c}}$ applies

$$a_{max}\,(motor) = a_{max}\,(track) = \frac{\omega_0^2\ e_{max}}{\mathrm{c}} \qquad (8)$$

Hence, it is permitted to use a_{max} (*motor*) as specified for low frequencies in 11.4.6 and 11.4.8 for the calculation of ω_0 of a Reference Servo.

Q.3 Requirement for track deviations

The track deviations shall be such that, when tracking with a Reference Servo on a disk rotating at the specified frequency, the tracking error shall not be larger than e_{max} during more than 200 μs.

The open-loop transfer function of the Reference Servo for axial and radial tracking shall be given by equation (3) within an accuracy such that $|1+H|$ does not differ by more than ± 20% from its nominal value in a bandwidth from 50 Hz to 170 kHz. The constant c shall be 3. The 0 dB frequency $\dfrac{\omega_0}{2\pi}$ shall be given by equation (5), where a_{max} and e_{max} for axial and radial tracking are specified in 19.2.4.3, 11.4.6 and 11.4.8.

Q.4 Measurement implementation

Three possible implementations for an axial or radial measurement system have been given below. H_a is the open-loop transfer function of the actual tracking servo of the drive. H_S is the transfer function for the Reference Servo as given in equation (3). x and y are the position of the track and the focus of the optical beam. e_S is the tracking error after a Reference Servo, the signal of which has to be checked according to the previous paragraph.

© ISO/IEC 2001 – All rights reserved

Copyright International Organization for Standardization
Provided by IHS under license with ISO
No reproduction or networking permitted without license from IHS
Not for Resale

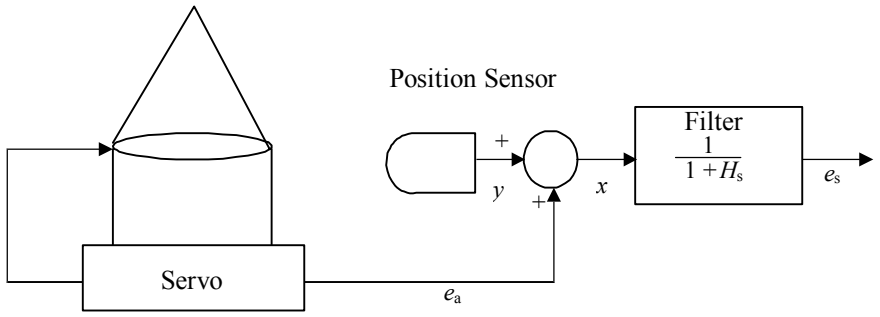

94-0081-B

Figure Q.2 — Implementation of a Reference Servo by filtering the track position signal with the reduction characteristics of the Reference Servo

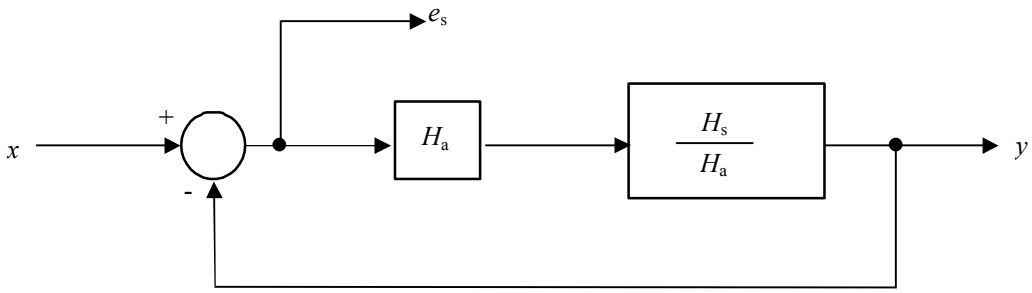

94-0082-B

Figure Q.3 — Implementation of a Reference Servo by changing the transfer function of the actual servo

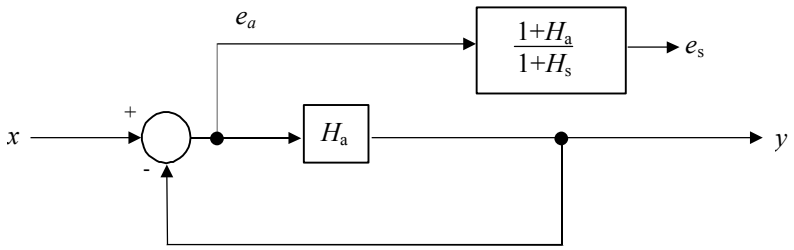

94-0083-B

Figure Q.4 — Implementation of a Reference Servo by changing the tracking error of the actual servo

The optimum implementation depends on the characteristics H_a and H_s. Good results for motors in leaf springs are often obtained by using separate circuits in a low and high frequency Channel. The implementation of figure Q.2 is used in the low-frequency Channel, while that of figures Q.3 or Q.4 is used in the high-frequency Channel. The signals from both channels are added with a reversed cross-over filter to get the required tracking error. In the low-frequency Channel one can also use the current through the motor as a measure of the acceleration of the motor, provided the latter is free from hysteresis. The current must be corrected for the transfer function of the motor and then be converted to a tracking error with a filter with a transfer function $\frac{e}{a} = \frac{e}{x\omega^2}$ derived from equation (4).

© ISO/IEC 2001 – All rights reserved
Copyright International Organization for Standardization
Provided by IHS under license with ISO
No reproduction or networking permitted without license from IHS
Not for Resale

ICS 35.220.30

Price based on 78 pages

© ISO/IEC 2001 – All rights reserved

Copyright International Organization for Standardization
Provided by IHS under license with ISO
No reproduction or networking permitted without license from IHS

Not for Resale