INTERNATIONAL STANDARD

ISO/IEC 20114

First edition
2004-05-15

Information technology — Telecommunications and information exchange between systems — Private Integrated Services Network (PISN) — Inter-exchange signalling protocol — Make call request supplementary service

Technologies de l'information — Télécommunications et échange d'information entre systèmes — Réseau privé à intégration de services — Protocole de signalisation d'échange — Service supplémentaire de demande par appel

Reference number
ISO/IEC 20114:2004(E)

© ISO/IEC 2004

Copyright International Organization for Standardization
Reproduced by IHS under license with ISO
No reproduction or networking permitted without license from IHS

Not for Resale

PDF disclaimer

This PDF file may contain embedded typefaces. In accordance with Adobe's licensing policy, this file may be printed or viewed but shall not be edited unless the typefaces which are embedded are licensed to and installed on the computer performing the editing. In downloading this file, parties accept therein the responsibility of not infringing Adobe's licensing policy. The ISO Central Secretariat accepts no liability in this area.

Adobe is a trademark of Adobe Systems Incorporated.

Details of the software products used to create this PDF file can be found in the General Info relative to the file; the PDF-creation parameters were optimized for printing. Every care has been taken to ensure that the file is suitable for use by ISO member bodies. In the unlikely event that a problem relating to it is found, please inform the Central Secretariat at the address given below.

© ISO/IEC 2004

All rights reserved. Unless otherwise specified, no part of this publication may be reproduced or utilized in any form or by any means, electronic or mechanical, including photocopying and microfilm, without permission in writing from either ISO at the address below or ISO's member body in the country of the requester.

ISO copyright office
Case postale 56 • CH-1211 Geneva 20
Tel. + 41 22 749 01 11
Fax + 41 22 749 09 47
E-mail copyright@iso.org
Web www.iso.org

Published in Switzerland

Copyright International Organization for Standardization
Reproduced by IHS under license with ISO
No reproduction or networking permitted without license from IHS

© ISO/IEC 2004 – All rights reserved

Not for Resale

Contents

Page

Foreword ... iv

Introduction ... v

1 Scope ... 1

2 Conformance ... 1

3 Normative references ... 1

4 Terms and definitions ... 2
4.1 External definitions ... 2
4.2 Other definitions ... 3

5 Acronyms ... 4

6 Signalling Protocol for the support of SS-MCR ... 4
6.1 SS-MCR description ... 4
6.2 SS-MCR operational requirements ... 4
6.3 SS-MCR coding requirements ... 6
6.4 SS-MCR state definitions ... 9
6.5 SS-MCR signalling procedures ... 10
6.6 SS-MCR impact of interworking with public ISDNs ... 13
6.7 SS-MCR impact of interworking with non-ISDNs ... 13
6.8 Protocol interactions between SS-MCR and other supplementary services and ANFs ... 13
6.9 SS-MCR parameter values (Timers) ... 16

Annex A (normative) **Protocol Implementation Conformance Statement (PICS) Proforma** ... 17
A.1 Introduction ... 17
A.2 Instructions for completing the PICS proforma ... 17
A.3 PICS proforma for ISO/IEC 20114 ... 18

Annex B (informative) **Examples of Message Sequences** ... 21
B.1 Example message sequences for invocation and operation of SS-MCR ... 22

Annex C (informative) **Specification and Description Language (SDL) Representation of Procedures** ... 26
C.1 SDL representation of SS-MCR at the Requesting PINX ... 27
C.2 SDL representation of SS-MCR at the Co-operating PINX ... 28
C.3 SDL representation of SS-MCR at the Destination PINX ... 29

© ISO/IEC 2004 All rights reserved

Copyright International Organization for Standardization
Reproduced by IHS under license with ISO
No reproduction or networking permitted without license from IHS
Not for Resale

Foreword

ISO (the International Organization for Standardization) and IEC (the International Electrotechnical Commission) form the specialized system for worldwide standardization. National bodies that are members of ISO or IEC participate in the development of International Standards through technical committees established by the respective organization to deal with particular fields of technical activity. ISO and IEC technical committees collaborate in fields of mutual interest. Other international organizations, governmental and non-governmental, in liaison with ISO and IEC, also take part in the work. In the field of information technology, ISO and IEC have established a joint technical committee, ISO/IEC JTC 1.

International Standards are drafted in accordance with the rules given in the ISO/IEC Directives, Part 2.

The main task of the joint technical committee is to prepare International Standards. Draft International Standards adopted by the joint technical committee are circulated to national bodies for voting. Publication as an International Standard requires approval by at least 75 % of the national bodies casting a vote.

Attention is drawn to the possibility that some of the elements of this document may be the subject of patent rights. ISO and IEC shall not be held responsible for identifying any or all such patent rights.

ISO/IEC 20114 was prepared by ECMA (as ECMA-344) and was adopted, under a special “fast-track procedure”, by Joint Technical Committee ISO/IEC JTC 1, *Information technology*, in parallel with its approval by national bodies of ISO and IEC.

© ISO/IEC 2004 – All rights reserved
Copyright International Organization for Standardization
Reproduced by IHS under license with ISO
No reproduction or networking permitted without license from IHS
Not for Resale

Introduction

This International Standard is one of a series defining services and signalling protocols applicable to Private Integrated Services Networks (PISNs). The series uses ISDN concepts as developed by ITU-T and conforms to the framework of International Standards for Open Systems Interconnection as defined by ISO/IEC.

This International Standard specifies the signalling protocol for use at the Q reference point in support of the Make Call Request supplementary service. The protocol defined in this International Standard forms part of the PSS1 protocol (informally known as QSIG).

This International Standard is based upon the practical experience of ECMA member companies and the results of their active and continuous participation in the work of ISO/IEC JTC1, ITU-T, ETSI and other international and national standardization bodies. It represents a pragmatic and widely based consensus.

© ISO/IEC 2004 All rights reserved

Copyright International Organization for Standardization
Reproduced by IHS under license with ISO
No reproduction or networking permitted without license from IHS
Not for Resale

--`,,`,,`-`-`,,`,,`,`,,`---

Copyright International Organization for Standardization
Reproduced by IHS under license with ISO
No reproduction or networking permitted without license from IHS

Not for Resale

Information technology — Telecommunications and information exchange between systems — Private Integrated Services Network (PISN) — Inter-exchange signalling protocol — Make call request supplementary service

1 Scope

This International Standard specifies the signalling protocol for the support of the Make Call Request supplementary service (SS-MCR) at the Q reference point between Private Integrated services Network eXchanges (PINXs) connected together within a Private Integrated Services Network (PISN).

Supplementary service MCR enables a Requesting User to request a Co-operating User to establish a new Requested Call to a Destination User. This new Requested Call between the Co-operating and Destination User can be either a Basic call or a Call Independent Signalling Connection.

The Q reference point is defined in ISO/IEC 11579-1.

Service specifications are produced in three stages and according to the method specified in ETS 300 387. This International Standard contains the stage 3 specification for the Q reference point and satisfies the requirements identified by the stage 1 and stage 2 specifications in ISO/IEC 20113.

The signalling protocol for SS-MCR operates on top of the signalling protocol for basic circuit switched call control, as specified in ISO/IEC 11572, and uses certain aspects of the generic procedures for the control of supplementary services specified in ISO/IEC 11582.

This International Standard also specifies additional signalling protocol requirements for the support of interactions at the Q reference point between SS-MCR and other supplementary services and ANFs.

This International Standard is applicable to PINXs, which can interconnect to form a PISN.

2 Conformance

In order to conform to this International Standard, a PINX shall satisfy the requirements identified in the Protocol Implementation Conformance Statement (PICS) proforma in Annex A.

Conformance to this International Standard includes conforming to those clauses that specify protocol interactions between SS-MCR and other supplementary services and ANFs for which signalling protocols at the Q reference point are supported in accordance with the stage 3 standards concerned.

3 Normative references

The following referenced documents are indispensable for the application of this document. For dated references, only the edition cited applies. For undated references, the latest edition of the referenced document (including any amendments) applies.

© ISO/IEC 2004 All rights reserved

Copyright International Organization for Standardization
Reproduced by IHS under license with ISO
No reproduction or networking permitted without license from IHS
Not for Resale

ISO/IEC 11572:2000, *Information technology — Telecommunications and information exchange between systems — Private Integrated Services Network — Circuit mode bearer services — Inter-exchange signalling procedures and protocol*

ISO/IEC 11579-1:1994, *Information technology — Telecommunications and information exchange between systems — Private integrated services network — Part 1: Reference configuration for PISN Exchanges (PINX)*

ISO/IEC 11582:2002, *Information technology — Telecommunications and information exchange between systems — Private Integrated Services Network — Generic functional protocol for the support of supplementary services — Inter-exchange signalling procedures and protocol*

ISO/IEC 20113:2004, *Information technology — Telecommunications and information exchange between systems — Private Integrated Services Network — Specification, functional model and information flows — Make call request supplementary service*

ISO/IEC 20115:2004, *Information technology — Telecommunications and information exchange between systems — Private Integrated Services Network — Use of QSIG for Message Centre Access (MCA) profile standard*

ETS 300 387:1994, *Private Telecommunication Network (PTN); Method for the specification of basic and supplementary services*

ITU-T Rec. I.112:1993, *Vocabulary of terms for ISDNs*

ITU-T Rec. I.210:1993, *Principles of telecommunication services supported by an ISDN and the means to describe them*

ITU-T Rec. Q.950:2000, *Digital Subscriber Signalling System No. 1 (DSS 1) — Supplementary services protocols, structure and general principles*

ITU-T Rec. Z.100:1999, *Specification and Description Language*

4 Terms and definitions

For the purposes of this document, the following terms and definitions apply.

4.1 External definitions

This International Standard uses the following terms defined in other documents:

— Application Protocol Data Unit (APDU) (ISO/IEC 11582)

— Call, Basic call (ISO/IEC 11582)

— Call Independent Signalling Connection (ISO/IEC 11582)

— Call-Independent (ISO/IEC 11582)

— Gateway PINX (ISO/IEC 11582)

— Originating PINX (ISO/IEC 11582)

— Private Integrated Services Network (PISN) (ISO/IEC 11579-1)

— Private Integrated services Network eXchange (PINX) (ISO/IEC 11579-1)

— Signalling (ITU-T Rec. I.112)

© ISO/IEC 2004 – All rights reserved
Copyright International Organization for Standardization
Reproduced by IHS under license with ISO
No reproduction or networking permitted without license from IHS
Not for Resale

— Supplementary Service (ITU-T Rec. I.210)

— Supplementary Service Control Entity (ISO/IEC 11582)

— Terminating PINX (ISO/IEC 11582)

— Transit PINX (ISO/IEC 11582)

4.2 Other definitions

4.2.1
Co-operating PINX
The PINX where the Co-operating User is located.

4.2.2
Co-operating User
The user who receives a Make Call Request and who shall set up a new Requested Call to the Destination User.

4.2.3
Destination PINX
The PINX where the Destination User is located.

4.2.4
Destination User
The called user of the Requested Call i.e. the user to whom the Co-operating User shall establish a Requested Call.

4.2.5
Make Call Request
A request from the Requesting User for a new call (i.e. Requested Call) between a Co-operating User and a Destination User.

4.2.6
Original Call
The call between the Requesting User and the Co-operating User. The Original Call can be either a Basic call or a Call Independent Signalling Connection and is correlated with the Requested Call.

4.2.7
Requested Call
The call between the Co-operating User and the Destination User that is established by the Co-operating User due to a Make Call Request from the Requesting User. The Requested Call can either be a Basic call (with a specific Basic Service) or a Call Independent Signalling Connection and is correlated with the Original Call.

4.2.8
Requesting PINX
The PINX where the Requesting User is located.

4.2.9
Requesting User
The User who sends a Make Call Request to the Co-operating User with the request to establish a specific Requested Call to the Destination User.

--`,,`,,`-`-`,,`,,`,`,,`---
© ISO/IEC 2004 All rights reserved
Copyright International Organization for Standardization
Reproduced by IHS under license with ISO
No reproduction or networking permitted without license from IHS
Not for Resale

5 Acronyms

ANF	Additional Network Feature
APDU	Application Protocol Data Unit
ASN.1	Abstract Syntax Notation One
CISC	Call Independent Signalling Connection
ISDN	Integrated Services Digital Network
NFE	Network Facility Extension
PICS	Protocol Implementation Conformance Statement
PINX	Private Integrated services Network eXchange
PISN	Private Integrated Services Network
SDL	Specification and Description Language
SS	Supplementary Service
SS-MCR	Supplementary Service Make Call Request

6 Signalling Protocol for the support of SS-MCR

6.1 SS-MCR description

The supplementary service MCR enables a Requesting User to request a Co-operating User to establish a new Requested Call to a Destination User. This new Requested Call between the Co-operating User and the Destination User can either be a Basic call or a Call Independent Signalling Connection. The new Requested Call is correlated to the Original Call between the Requesting and Co-operating User.

6.2 SS-MCR operational requirements

6.2.1 Requirements on a Requesting PINX

Call establishment procedures for the incoming and outgoing side of an inter-PINX link and call release procedures, as specified in ISO/IEC 11572, shall apply.

Generic procedures for call-related control of supplementary services, as specified in ISO/IEC 11582 for an End PINX, shall apply.

Generic procedures for the call-independent control (connection-oriented) of supplementary services, as specified in ISO/IEC 11582 for an Originating PINX and for a Terminating PINX, shall apply.

6.2.2 Requirements on a Co-operating PINX

Call establishment procedures for the incoming and outgoing side of an inter-PINX link and call release procedures, as specified in ISO/IEC 11572, shall apply.

Generic procedures for call-related control of supplementary services, as specified in ISO/IEC 11582 for an End PINX, shall apply.

© ISO/IEC 2004 – All rights reserved
Copyright International Organization for Standardization
Reproduced by IHS under license with ISO
No reproduction or networking permitted without license from IHS
Not for Resale

Generic procedures for the call-independent control (connection-oriented) of supplementary services, as specified in ISO/IEC 11582 for a Terminating PINX and for an Originating PINX, shall apply.

6.2.3 Requirements on a Destination PINX

Call establishment procedures for the incoming and outgoing side of an inter-PINX link and call release procedures, as specified in ISO/IEC 11572, shall apply.

Generic procedures for call-related control of supplementary services, as specified in ISO/IEC 11582 for an End PINX, shall apply.

Generic procedures for the call-independent control (connection-oriented) of supplementary services, as specified in ISO/IEC 11582 for a Terminating PINX and for an Originating PINX, shall apply.

6.2.4 Requirements on a Transit PINX

Basic call procedures specified in ISO/IEC 11572 for a Transit PINX shall apply.

Generic procedures for call-related control of supplementary services, as specified in ISO/IEC 11582 for a Transit PINX, shall apply.

Generic procedures for the call-independent control (connection-oriented) of supplementary services, as specified in ISO/IEC 11582 for a Transit PINX, shall apply.

© ISO/IEC 2004 All rights reserved

Copyright International Organization for Standardization
Reproduced by IHS under license with ISO
No reproduction or networking permitted without license from IHS
Not for Resale

6.3 SS-MCR coding requirements

6.3.1 Operations

The operations defined in Abstract Syntax Notation number 1 (ASN.1) in Table 1 shall apply.

Table 1 — Operations in support of SS-MCR

```
SS-MCR-Operations-asn97
{iso (1) identified-organization (3) icd-ecma (12) standard (0)
 qsig-make-call-request (344) make-call-request-operations (0)}

DEFINITIONS EXPLICIT TAGS ::=

BEGIN

IMPORTS

OPERATION,
ERROR
FROM Remote-Operations-Information-Objects
{ joint-iso-itu-t (2) remote-operations (4) informationObjects (5) version1 (0) }

EXTENSION,
Extension {}
FROM Manufacturer-specific-service-extension-class-asn1-97
{ iso (1) standard (0) pss1-generic-procedures (11582) msi-class-asn1-97 (11) }

Name
FROM Name-Operations-asn1-97
{ iso (1) standard (0) pss1-name (13868) name-operations-asn1-97 (1) }

BasicService
FROM Call-Diversion-Operations-asn1-97
{ iso (1) standard (0) pss1-call-diversion (13873)
  call-diversion-operations-asn1-97 (1) }

basicServiceNotProvided,
supplementaryServiceInteractionNotAllowed,
userNotSubscribed
FROM General-Error-List
{itu-t (0) recommendation (0) q (17) 950 (950) general-error-list (1)}

PresentedAddressUnscreened
FROM Addressing-Data-Elements-asn1-97
{ iso (1) standard (0) pss1-generic-procedures (11582)
  addressing-data-elements-asn1-97 (20) }

CallIdentity, establishmentFailure
FROM Path-Replacement-Operations-asn1-97
{iso (1) standard (0) pss1-path-replacement (13874) pr-operations-asn1-97(1)}
;

Make-Call-Request-Operations OPERATION::= {
 mCRequest | mCAlerting | mCInform }
```


Copyright International Organization for Standardization
Reproduced by IHS under license with ISO
No reproduction or networking permitted without license from IHS
Not for Resale
© ISO/IEC 2004 – All rights reserved

Table 1 — Operations in support of SS-MCR (*continued*)

```
mCRequest   OPERATION ::= {
            ARGUMENT        MCRequestArg
            RESULT          MCRequestResult
            ERRORS         {userNotSubscribed|
                            basicServiceNotProvided|
                            supplementaryServiceInteractionNotAllowed|
                            invalidDestinationNumber|
                            invalidCooperationNumber|
                            mCRequestNotAllowed|
                            mCExecutionNotAllowed|
                            mCDestUserBusy|
                            mCCoopUserBusy|
                            mCCoopUserRejected|
                            establishmentFailure|
                            unspecified}
            CODE            local: 112
                          }

mCInform    OPERATION ::= {
            ARGUMENT        MCInformArg
            RETURN RESULT   FALSE
            ALWAYS RESPONDS FALSE
            ERRORS         {userNotSubscribed|
                            basicServiceNotProvided|
                            supplementaryServiceInteractionNotAllowed|
                            invalidDestinationNumber|
                            mCExecutionNotAllowed|
                            mCDestUserBusy|
                            unspecified}
            CODE            local: 113
                           }

mCAlerting  OPERATION ::= {
            ARGUMENT        MCAlertingArg
            RETURN RESULT   FALSE
            ALWAYS RESPONDS FALSE
            CODE            local: 114
                         }

MCRequestArg    ::=     SEQUENCE
            {
            callType              CallType,
            retainOrigCall        BOOLEAN DEFAULT TRUE,
            destinationAddress    PresentedAddressUnscreened,
            requestingAddress     [0] PresentedAddressUnscreened OPTIONAL,
            cooperatingAddress    [1] PresentedAddressUnscreened OPTIONAL,
            correlation           Correlation,
            extensions            MCRExtensions     OPTIONAL,
            ...
            }

MCRequestResult  ::=    SEQUENCE
            {
            extensions            MCRExtensions     OPTIONAL,
            ...
            }
```

© ISO/IEC 2004 All rights reserved

Copyright International Organization for Standardization
Reproduced by IHS under license with ISO
No reproduction or networking permitted without license from IHS
Not for Resale

Table 1 — Operations in support of SS-MCR (*concluded*)

```
MCInformArg         ::=    SEQUENCE
            {
            requestingAddress        [0] PresentedAddressUnscreened OPTIONAL,
            cooperatingAddress       [1] PresentedAddressUnscreened OPTIONAL,
            correlation              Correlation,
            extensions               MCRExtensions     OPTIONAL,
            ...
            }

MCAlertingArg        ::=    SEQUENCE
            {
            correlation              Correlation,
            extensions               MCRExtensions     OPTIONAL,
            ...
            }
CallType         ::=    CHOICE
            {
            basicService             BasicService,
            cisc                     NULL
            }

Correlation    ::=    SEQUENCE
            {
            correlationData          CallIdentity,
            correlationReason        CorrelationReason    OPTIONAL
            }
CorrelationReason    ::=    INTEGER
            {
            unknown             (0),
            mCACommunication    (1),
            cTIApplication      (2)
            } (0..255)

MCRExtensions    ::= CHOICE
            {
            none        NULL,
            single      [0] IMPLICIT Extension
                            { { MakeCallRequestExtension } } ,
            multiple    [1] IMPLICIT SEQUENCE OF Extension
                            { { MakeCallRequestExtension } }
            }

MakeCallRequestExtension EXTENSION::= {...}

invalidDestinationNumber   ERROR ::= {CODE local : 1030}
invalidCooperationNumber   ERROR ::= {CODE local : 1031}
mCRequestNotAllowed        ERROR ::= {CODE local : 1032}
mCExecutionNotAllowed      ERROR ::= {CODE local : 1033}
mCDestUserBusy             ERROR ::= {CODE local : 1034}
mCCoopUserBusy             ERROR ::= {CODE local : 1035}
mCCoopUserRejected         ERROR ::= {CODE local : 1036}
unspecified                ERROR ::= {PARAMETER Extension
                               { { MakeCallRequestExtension } }
                           CODE local : 1008
                                      }

END        -- of SS-MCR-Operations
```

Copyright International Organization for Standardization
Reproduced by IHS under license with ISO
No reproduction or networking permitted without license from IHS

© ISO/IEC 2004 – All rights reserved

Not for Resale

6.3.2 Information elements

6.3.2.1 Facility information element

The operations defined in 6.3.1 shall be coded in the Facility information element in accordance with ISO/IEC 11582.

When conveying the invoke APDUs of the operations defined in 6.3.1, the destination Entity data element of the NFE shall contain the value endPINX.

When conveying the invoke APDU of operation mCRequest defined in 6.3.1, the interpretation APDU shall be set to value rejectAnyUnrecognisedInvokePdu or shall be omitted.

When conveying the invoke APDU of operation mCInform or mCAlerting defined in 6.3.1, the interpretation APDU shall be set to value discardAnyUnrecognisedInvokePdu.

6.3.2.2 Other information elements

Any other information element shall be coded in accordance with ISO/IEC 11572.

6.3.3 Messages

The Facility information element shall be conveyed in messages as specified in Clause 10 of ISO/IEC 11582.

6.4 SS-MCR state definitions

6.4.1 States at the Requesting PINX

The procedures for the Requesting PINX are written in terms of the following conceptual states existing within the SS-MCR Control entity in that PINX in association with a particular SS-MCR request from the Requesting User.

6.4.1.1 State MCR-Idle

SS-MCR is not operating.

6.4.1.2 State MCR-Active

SS-MCR is operating. A mCRequest invoke APDU was sent to the Co-operating PINX. The Requesting PINX awaits the result of this operation.

6.4.2 States at the Co-operating PINX

The procedures for the Co-operating PINX are written in terms of the following conceptual states existing within the SS-MCR Control entity in that PINX.

6.4.2.1 State MCR-Idle

SS-MCR is not operating.

6.4.2.2 State MCR-Active

SS-MCR is operating. Call establishment of the requested call is initiated by the Co-operating PINX and a mCInform invoke APDU was sent towards the Destination PINX. The Co-operating PINX awaits the result of the call establishment.

© ISO/IEC 2004 All rights reserved

Copyright International Organization for Standardization
Reproduced by IHS under license with ISO
No reproduction or networking permitted without license from IHS
Not for Resale

6.4.3 States at the Destination PINX

No SS-MCR specific states required.

6.5 SS-MCR signalling procedures

Examples of message sequences are shown in Annex B.

6.5.1 Actions at the Requesting PINX

The SDL representation of procedures at the Requesting PINX is shown in Clause C.1 of Annex C.

6.5.1.1 Normal procedures

6.5.1.1.1 Activation / deactivation / interrogation

Not applicable.

6.5.1.1.2 Invocation and operation

In state MCR-Idle, due to a request from the Requesting User, the Requesting PINX shall send a mCRequest invoke APDU to the Co-operating PINX, start Timer T1 and enter state MCR-Active.

For the transport of this mCRequest invoke APDU the Requesting PINX shall either use the Call Reference of an already existing Basic Call or an already existing Call Independent Signalling Connection or set up a new Call Independent Signalling Connection in accordance with the procedures specified in 7.3 of ISO/IEC 11582. In the case of set up of a new Call Independent Signalling Connection, the Requesting PINX is responsible for the clearing of this connection.

The elements callType, retainOrigCall, destinationAddress, requestingAddress, cooperatingAddress and correlation of the mCRequest invoke APDU shall be set according to the request of the Requesting User.

NOTE Provision of element cooperatingAddress is required when a new CISC is to be established. If mCRequest.inv is sent on the call reference of an already existing connection, the Co-operating User is the User served on this call reference at the Co-operating PINX.

In state MCR-Active, on receipt of a mCAlerting invoke APDU from the Co-operating PINX, the Requesting PINX may indicate the result to the Requesting User, if the capability exists, and remain in state MCR-Active.

In state MCR-Active, on receipt of a mCRequest return result APDU from the Co-operating PINX, the Requesting PINX shall stop Timer T1, may indicate the result to the Requesting User if the capability exists, and shall enter state MCR-Idle.

6.5.1.2 Exceptional procedures

6.5.1.2.1 Activation / deactivation / interrogation

Not applicable.

6.5.1.2.2 Invocation and operation

In state MCR-Active, on receipt of either a mCRequest reject APDU or a mCRequest return error APDU from the Co-operating PINX or on Timer T1 expiry, the Requesting PINX may send an appropriate error indication to the Requesting User if the capability exists, shall stop Timer T1 if running, and shall enter state MCR-Idle.

© ISO/IEC 2004 – All rights reserved
Copyright International Organization for Standardization
Reproduced by IHS under license with ISO
No reproduction or networking permitted without license from IHS
Not for Resale

6.5.2 Actions at the Co-operating PINX

The SDL representation of procedures at the Co-operating PINX is shown in Clause C.2 of Annex C.

6.5.2.1 Normal procedures

6.5.2.1.1 Activation / deactivation / interrogation

Not applicable.

6.5.2.1.2 Invocation and operation

In State MCR-Idle, on receipt of a mCRequest invoke APDU from the Requesting PINX, the Co-operating PINX examines the received information and checks whether the make call request is allowed to be performed. If necessary, the Co-operating User may be prompted in an implementation specific manner prior to sending the SETUP message for the Requested Call.

NOTE A successful check may depend on the necessary Bearer Capability, user prompting and other implementations specific options.

If SS-MCR is allowed to be performed, the Co-operating PINX shall store the information received in elements correlation and retainOrigCall for further usage and send a SETUP message towards the Destination PINX conveying

- a Called Party IE with the information as received in element destinationAddress,
- a Bearer Capability IE and a Channel Identification IE appropriate for the information received in element callType,
- a Facility IE with a mCInform invoke APDU conveying information as received in the elements
    - requestingAddress,
    - cooperatingAddress,
    - and correlation of the mCRequest invoke APDU.

NOTE Other additional Facility IEs may be sent together with this SETUP message.

Afterwards the Co-operating PINX shall enter State MCR-Active.

In State MCR-Active, on receipt of an ALERTING message from the Destination PINX, the Co-operating PINX shall send a mCAlerting invoke APDU towards the Requesting PINX in a FACILITY message. The element correlation shall be set as received in the mCRequest invoke APDU.

In State MCR-Active, on receipt of a CONNECT message from the Destination PINX, the Co-operating PINX shall send a mCRequest return result APDU towards the Requesting PINX in a FACILITY message or, in the first call clearing message, if element retainOrigCall with value FALSE was received in State MCR-Idle.

6.5.2.2 Exceptional procedures

6.5.2.2.1 Activation / deactivation / interrogation

Not applicable.

© ISO/IEC 2004 All rights reserved

Copyright International Organization for Standardization
Reproduced by IHS under license with ISO
No reproduction or networking permitted without license from IHS
Not for Resale

6.5.2.2.2 Invocation and operation

In State MCR-Idle on receipt of a mCRequest invoke APDU from the Requesting PINX, if

- the make call request is not allowed to be performed or
- the Co-operating User is found busy or
- the Co-operating User rejects the request after prompting,

the Co-operating PINX shall send a mCRequest return error APDU indicating an appropriate error condition towards the Requesting PINX and remain in State MCR-Idle.

In State MCR-Active, on call failure, unexpected call clearing or receipt of a busy indication from the Destination User, the Co-operating PINX shall send a mCRequest return error APDU indicating an appropriate error condition in a FACILITY message or in the first call clearing message, if retainOrigCall was set to FALSE, towards the Requesting PINX and enter State MCR-Idle.

In State MCR-Active, on receipt of a mCInform return error APDU from the Destination PINX the Co-operating PINX shall map the mCInform return error APDU into a mCRequest return error APDU indicating the same error condition, send it in a FACILITY message or in the first call clearing message, if retainOrigCall was set to FALSE, towards the Requesting PINX and enter State MCR-Idle.

6.5.3 Actions at the Destination PINX

The SDL representation of procedures at the Destination PINX is shown in Clause C.3 of Annex C.

6.5.3.1 Normal procedures

6.5.3.1.1 Activation / deactivation / interrogation

Not applicable.

6.5.3.1.2 Invocation and operation

On receipt of a mCInform invoke APDU from the Co-operating PINX, the Destination PINX may indicate the received information to the Destination User if the capability exists.

6.5.3.2 Exceptional procedures

6.5.3.2.1 Activation / deactivation / interrogation

Not applicable.

6.5.3.2.2 Invocation and operation

On receipt of the mCInform invoke APDU from the Co-operating PINX, and if the Destination User is found busy or another error condition is found, the Destination PINX shall send a mCInform return error APDU indicating the appropriate error condition towards the Co-operating PINX.

6.5.4 Actions at a Transit PINX

Not applicable.

© ISO/IEC 2004 – All rights reserved
Copyright International Organization for Standardization
Reproduced by IHS under license with ISO
No reproduction or networking permitted without license from IHS
Not for Resale

6.6 SS-MCR impact of interworking with public ISDNs

Not applicable.

6.7 SS-MCR impact of interworking with non-ISDNs

Not applicable.

6.8 Protocol interactions between SS-MCR and other supplementary services and ANFs

This Clause specifies protocol interactions with other supplementary services and ANFs for which stage 3 standards had been published at the time of publication of this International Standard. For interactions with supplementary services and ANFs for which stage 3 standards are published subsequent to the publication of this International Standard, see those other stage 3 standards.

NOTE Simultaneous conveyance of APDUs for SS-MCR and another supplementary service or ANF in the same message, each in accordance with the requirements of its respective stage 3 standard, does not, on its own, constitute a protocol interaction.

NOTE Specific applications of this International Standard may restrict these interactions.

6.8.1 Calling Line Identification Presentation (SS-CLIP)

No protocol interaction.

6.8.2 Connected Line Identification Presentation (SS-COLP)

No protocol interaction.

6.8.3 Calling/Connected Line Identification Restriction (SS-CLIR)

No protocol interaction.

6.8.4 Calling Name Identification Presentation (SS-CNIP)

No protocol interaction.

6.8.5 Calling Name Identification Presentation (SS-CNIR)

No protocol interaction.

6.8.6 Connected Name Identification Presentation (SS-CONP)

No protocol interaction.

6.8.7 Completion of Call to Busy Subscriber (SS-CCBS)

No protocol interaction.

6.8.8 Completion of Call on No Reply (SS-CCNR)

No protocol interaction.

6.8.9 Call Transfer (SS-CT)

No protocol interaction.

© ISO/IEC 2004 All rights reserved

Copyright International Organization for Standardization
Reproduced by IHS under license with ISO
No reproduction or networking permitted without license from IHS
Not for Resale

6.8.10 Call Forwarding Unconditional (SS-CFU)

If the Co-operating User has activated SS-CFU, the request to establish a new Requested Call shall not be forwarded. The Co-operating PINX shall, as an implementation option, either override execution of SS-CFU and prompt the Co-operating User as specified in 6.5.2.1.2 or send a mCRequest return error APDU indicating an appropriate error value towards the Requesting PINX.

SS-CFU, activated at the Destination User, is not affected by SS-MCR, i.e. the Requested Call may be forwarded.

6.8.11 Call Forwarding Busy (SS-CFB)

If a Co-operating User has activated SS-CFB, the request to establish a new Requested Call shall not be forwarded and the Co-operating PINX shall send a mCRequest return error APDU indicating an appropriate error value towards the Requesting PINX.

SS-CFB, activated at the Destination User, is not affected by SS-MCR, i.e. the Requested Call may be forwarded.

6.8.12 Call Forwarding No Reply (SS-CFNR)

If the Co-operating User has activated SS-CFNR, the request to establish a new Requested Call shall not be forwarded. The Co-operating PINX shall, as an implementation option, either override execution of SS-CFNR and prompt the Co-operating User as specified in 6.5.2.1.2 or send a mCRequest return error APDU indicating an appropriate error value towards the Requesting PINX.

SS-CFNR, activated at the Destination User, is not affected by SS-MCR, i.e. the Requested Call may be forwarded.

6.8.13 Call Deflection (SS-CD)

Deflection of the request to establish a new Requested Call shall not be allowed. The Co-operating PINX shall, as an implementation option, either override execution of SS-CD and prompt the Co-operating User as specified in 6.5.2.1.2 or send a mCRequest return error APDU indicating an appropriate error value towards the Requesting PINX.

SS-CD, activated at the Destination User, is not affected by SS-MCR, i.e. the Requested Call may be deflected.

6.8.14 Path Replacement (ANF-PR)

No protocol interaction.

6.8.15 Call Offer (SS-CO)

No protocol interaction.

6.8.16 Call Intrusion (SS-CI)

No protocol interaction.

6.8.17 Do not Disturb (SS-DND)

On receipt of a mCRequest invoke APDU and if the Co-operating User has activated SS-DND, it is an implementation option whether SS-DND or SS-MCR is performed. If SS-DND overrides, the Co-operating PINX shall send a mCRequest return error APDU indicating an appropriate error value towards the Requesting PINX.

© ISO/IEC 2004 – All rights reserved
Copyright International Organization for Standardization
Reproduced by IHS under license with ISO
No reproduction or networking permitted without license from IHS
Not for Resale

On receipt of a mCInform invoke APDU and if the Destination User has activated SS-DND, it is an implementation option whether SS-DND or SS-MCR is performed. If SS-DND overrides, the Destination PINX shall send a mCInform return error APDU indicating an appropriate error value towards the Co-Operating PINX.

6.8.18 Do not Disturb Override (SS-DNDO)

No protocol interaction.

6.8.19 Advice of Charge (SS-AOC)

No protocol interaction.

6.8.20 Recall (SS-RE)

No protocol interaction.

6.8.21 Call Interception (ANF-CINT)

No protocol interaction.

6.8.22 Transit Counter (ANF-TC)

No protocol interaction.

6.8.23 Route Restriction Class (ANF-RRC)

No protocol interaction.

6.8.24 Message Waiting Indication (SS-MWI)

No protocol interaction.

6.8.25 Wireless Terminal Location Registration (SS-WTLR)

No protocol interaction.

6.8.26 Wireless Terminal Incoming Call (ANF-WTMI)

No protocol interaction.

6.8.27 Wireless Terminal Outgoing Call (ANF-WTMO)

No protocol interaction.

6.8.28 Wireless Terminal Authentication of a WTM User (SS-WTAT)

No interaction

6.8.29 Wireless Terminal Authentication of the PISN (SS-WTAN)

No protocol interaction.

© ISO/IEC 2004 All rights reserved

Copyright International Organization for Standardization
Reproduced by IHS under license with ISO
No reproduction or networking permitted without license from IHS
Not for Resale

6.8.30 Private User Mobility Incoming Call (ANF-PUMI)

No protocol interaction.

6.8.31 Private User Mobility Outgoing Call (ANF-PUMO)

No protocol interaction.

6.8.32 Private User Mobility Registration (SS-PUMR)

No protocol interaction.

6.8.33 Common Information (ANF-CMN)

No protocol interaction.

6.8.34 Call Priority Interruption (Protection) (SS-CPI(P))

No protocol interaction.

6.8.35 Single Step Call Transfer (SS-SSCT)

No protocol interaction.

6.8.36 Simple Dialog (SS-SD)

No protocol interaction.

6.8.37 Global Call Identification and Call Linkage (ANF-CIDL)

On receipt of a callIdentificationAssign invoke APDU together with a mCRequest invoke APDU from the Requesting PINX, the Co-operating PINX shall send a callIdentificationAssign invoke APDU using the same threadID as received from the Requesting PINX towards the Destination PINX together with the mCInform invoke APDU.

6.8.38 Short Message Service (SS-SMS)

No protocol interaction.

6.8.39 Message Centre Monitoring (SS-MCM)

No protocol interaction.

6.8.40 Mailbox Identification (SS-MID)

No protocol interaction.

6.9 SS-MCR parameter values (Timers)

6.9.1 Timer T1

This timer shall be started by the Requesting PINX when a mCRequest invoke APDU is sent to the Co-operating PINX. The timer shall be stopped on receipt of a return result, return error or reject APDU of the mCRequest operation. The expiry of this timer shall be equivalent to the receipt of a reject APDU.

Timer T1 shall have a value not less than 50 seconds.

NOTE When setting timer T1, the value of Basic Call timer T310 as administrated in the PISN should be considered.

© ISO/IEC 2004 – All rights reserved
Copyright International Organization for Standardization
Reproduced by IHS under license with ISO
No reproduction or networking permitted without license from IHS
Not for Resale

Annex A
(normative)

Protocol Implementation Conformance Statement (PICS) Proforma

A.1 Introduction

The supplier of a protocol implementation; which is claimed to conform to this International Standard shall complete the following Protocol Implementation Conformance Statement (PICS) proforma.

A completed PICS proforma is the PICS for the implementation in question. The PICS is a statement of which capabilities and options of the protocol have been implemented. The PICS can have a number of uses, including use:

— by the protocol implementor, as a check-list to reduce the risk of failure to conform to the standard through oversight;

— by the supplier and acquirer, or potential acquirer, of the implementation, as a detailed indication of the capabilities of the implementation, stated relative to the common basis for understanding provided by the standard's PICS proforma;

— by the user or potential user of the implementation, as a basis for initially checking the possibility of interworking with another implementation - while interworking can never be guaranteed, failure to interwork can often be predicted from incompatible PICSs;

— by a protocol tester, as the basis for selecting appropriate tests against which to assess the claim for conformance of the implementation.

A.2 Instructions for completing the PICS proforma

A.2.1 General structure of the PICS proforma

The PICS proforma is a fixed-format questionnaire divided into sub-clauses each containing a group of individual items. Each item is identified by an item number, the name of the item (question to be answered), and the reference(s) to the clause(s) that specifies (specify) the item in the main body of this International Standard.

The “Status” column indicates whether an item is applicable and if so whether support is mandatory or optional. The following terms are used:

m mandatory (the capability is required for conformance to the protocol);

o optional (the capability is not required for conformance to the protocol, but if the capability is implemented it is required to conform to the protocol specifications);

o.<n> optional, but support of at least one of the group of options labelled by the same numeral <n> is required;

x prohibited;

<c.cond> conditional requirement, depending on support for the item or items listed in condition <cond>;

© ISO/IEC 2004 All rights reserved

Copyright International Organization for Standardization
Reproduced by IHS under license with ISO
No reproduction or networking permitted without license from IHS
Not for Resale

<item>:m simple conditional requirement, the capability being mandatory if item number <item> is supported, otherwise not applicable;

<item>:o simple conditional requirement, the capability being optional if item number <item> is supported, otherwise not applicable.

Answers to the questionnaire items are to be provided either in the “Support” column, by simply marking an answer to indicate a restricted choice (Yes or No), or in the “Not Applicable” column (N/A).

A.2.2 Additional information

Items of additional information allow a supplier to provide further information intended to assist the interpretation of the PICS. It is not intended or expected that a large quantity will be supplied, and a PICS can be considered complete without any such information. Examples might be an outline of the ways in which a (single) implementation can be set up to operate in a variety of environments and configurations.

References to items of additional information may be entered next to any answer in the questionnaire, and may be included in items of exception information.

A.2.3 Exception information

It may occasionally happen that a supplier will wish to answer an item with mandatory or prohibited status (after any conditions have been applied) in a way that conflicts with the indicated requirement. No pre-printed answer will be found in the Support column for this. Instead, the supplier is required to write into the Support column an x.<i> reference to an item of exception information, and to provide the appropriate rationale in the exception item itself.

An implementation for which an exception item is required in this way does not conform to this International Standard. A possible reason for the situation described above is that a defect in the standard has been reported, a correction for which is expected to change the requirement not met by the implementation.

A.3 PICS proforma for ISO/IEC 20114

A.3.1 Implementation identification

Supplier	
Contact point for queries about the PICS	
Implementation name(s) and version(s)	
Other information necessary for full identification, e.g., name(s) and version(s) for machines and/or operating systems; system name(s)	

Only the first three items are required for all implementations; other information may be completed as appropriate in meeting the requirement for full identification.

The terms name and version should be interpreted appropriately to correspond with a supplier’s terminology (e.g. type, series, model).

© ISO/IEC 2004 – All rights reserved
Copyright International Organization for Standardization
Reproduced by IHS under license with ISO
No reproduction or networking permitted without license from IHS
Not for Resale

A.3.2 Protocol summary

Protocol version	1.0
Addenda implemented (if applicable)	
Amendments implemented	
Have any exception items been required (see A.2.3)?	No [ ] Yes [ ] (The answer Yes means that the implementation does not conform to this International Standard)

Date of Statement	

A.3.3 General

Item	Question/feature	References	Status	N/A	Support
A1	Behaviour as Requesting PINX for SS-MCR		o.1		Yes [ ] No[ ]
A2	Behaviour as Co-operating PINX for SS-MCR		o.1		Yes [ ] No[ ]
A3	Behaviour as Destination PINX for SS-MCR		o.1		Yes [ ] No[ ]

A.3.4 Procedures

Item	Question/feature	References	Status	N/A	Support
B1	Support of relevant ISO/IEC 11572 and ISO/IEC 11582 procedures at the Requesting PINX	6.2.1	A1:m	[ ]	m:Yes [ ]
B2	Support of relevant ISO/IEC 11572 and ISO/IEC 11582 procedures at the Co-operating PINX	6.2.2	A2:m	[ ]	m:Yes [ ]
B3	Support of relevant ISO/IEC 11572 and ISO/IEC 11582 procedures at the Destination PINX	6.2.3	A3:m	[ ]	m:Yes [ ]
B4	Procedures at the Requesting PINX for invocation and operation	6.5.1	A1:m	[ ]	m:Yes [ ]
B5	Procedures at the Co-operating PINX for invocation and operation	6.5.2	A2:m	[ ]	m:Yes [ ]
B6	Procedures at the Destination PINX for invocation and operation	6.5.3	A3:m	[ ]	m:Yes [ ]

© ISO/IEC 2004 All rights reserved

Copyright International Organization for Standardization
Reproduced by IHS under license with ISO
No reproduction or networking permitted without license from IHS
Not for Resale

A.3.5 Coding

Item	Question/feature	References	Status	N/A	Support
C1	Sending of mCRequest invoke APDU to the Co-operating PINX	6.5.1	A1:m	[ ]	m:Yes [ ]
C2	Receipt of mCRequest return result APDU or mCRequest return error from the Co-operating PINX	6.5.1	A1:m	[ ]	m:Yes [ ]
C3	Receipt of mCRequest invoke APDU from the Requesting PINX	6.5.2	A2:m	[ ]	m:Yes [ ]
C4	Sending of mCRequest return result APDU or mCRequest return error APDU in case of an error indication	6.5.2	A2:m	[ ]	m:Yes [ ]
C5	Sending of mCAlerting invoke APDU to the Requesting PINX	6.5.2	A2:m	[ ]	m:Yes [ ]
C6	Receipt of mCAlerting invoke APDU from the Co-operating PINX	6.5.1	A1:m	[ ]	m:Yes [ ]
C7	Sending of mCInform invoke APDU to the Destination PINX	6.5.2	A2:m	[ ]	m:Yes [ ]
C8	Receipt of mCInform return error APDU from the Destination PINX	6.5.2	A2:m	[ ]	m:Yes [ ]
C9	Receipt of mCInform invoke APDU from the Co-operating PINX	6.5.3	A3:m	[ ]	m:Yes [ ]
C10	Sending of mCInform return error APDU to the Co-operating PINX	6.5.3	A3:m	[ ]	m:Yes [ ]

A.3.6 Timers

Item	Question/feature	References	Status	N/A	Support
D1	Support of timer T1	6.9.1	A1:m	[ ]	m: Yes [ ] Value [. . . .]

--`,,`,,`-`-`,,`,,`,`,,`---

© ISO/IEC 2004 – All rights reserved
Copyright International Organization for Standardization
Reproduced by IHS under license with ISO
No reproduction or networking permitted without license from IHS
Not for Resale

Annex B
(informative)

Examples of Message Sequences

This Annex describes some typical message flows for SS-MCR. The following conventions are used in the Figures of this Annex.

1. The following notation is used:


Basic call message containing SS-MCR information

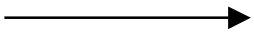
Basic call message without SS-MCR information


Call Independent Signalling Connection messages containing SS-MCR information

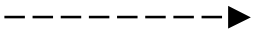
Call Independent Signalling Connection messages without SS-MCR information


SS-MCR information for the connected users

xxx.inv	Invoke APDU for operation xxx
xxx.rr	Return result APDU for operation xxx
xxx.re	Return error APDU for operation xxx

2. The Figures show messages exchanged via Protocol Control between PINXs involved in SS-MCR. Only messages relevant to SS-MCR are shown.

3. Only the relevant information content (e.g. remote operation APDUs, notifications, information elements) is listed below each message name. The Facility and Notification indicator information elements containing remote operation APDUs and notifications are not explicitly shown. Information with no impact on SS-MCR is not shown.

© ISO/IEC 2004 All rights reserved

Copyright International Organization for Standardization
Reproduced by IHS under license with ISO
No reproduction or networking permitted without license from IHS
Not for Resale

B.1 Example message sequences for invocation and operation of SS-MCR

B.1.1 Example message sequences without prior existing connection

Figure B.1 shows an example of successful invocation and operation of SS-MCR. The Requesting PINX initiates establishment of a Basic Call. A CISC is to be established before invocation of SS-MCR. The connection between Requesting PINX and Co-operating PINX is released after successful Call establishment as requested in the mCRequest invoke APDU.

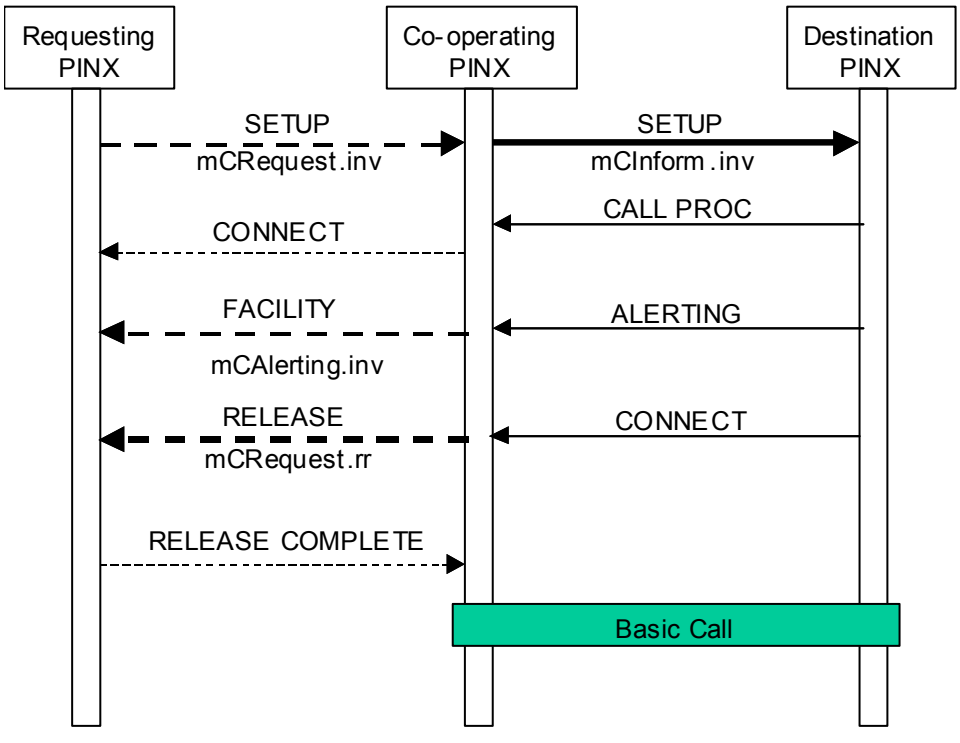

Figure B.1 — Example of successful invocation and operation of SS-MCR

© ISO/IEC 2004 – All rights reserved
Copyright International Organization for Standardization
Reproduced by IHS under license with ISO
No reproduction or networking permitted without license from IHS
Not for Resale

Figure B.2 shows an example of successful invocation and operation of SS-MCR initiated by the Requesting PINX in case of an already existing CISC before invocation of SS-MCR. The connection between Requesting PINX and Co-operating PINX is retained after successful Call establishment.

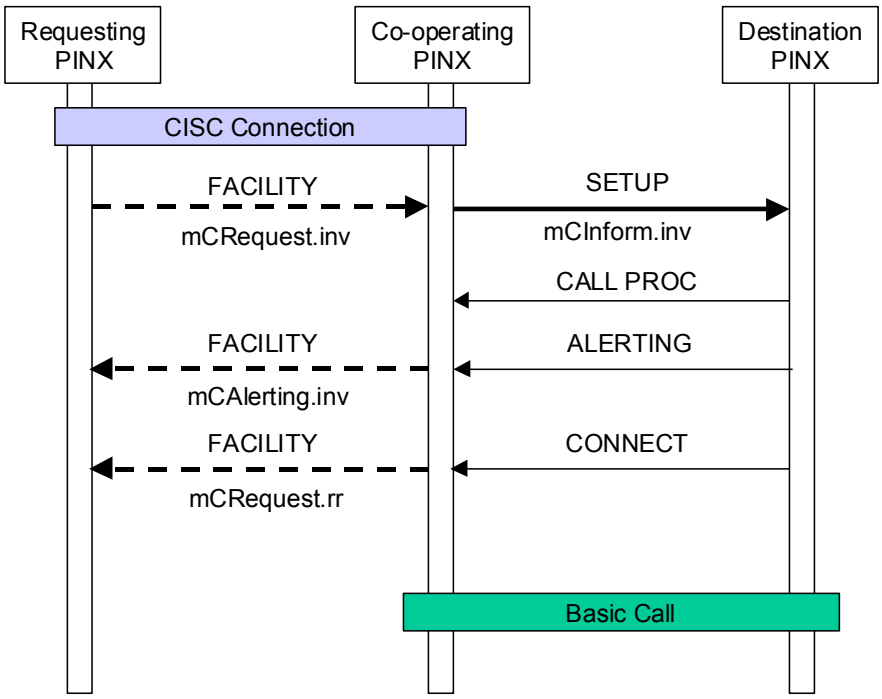

Figure B.2 — Example of successful invocation and operation of SS-MCR using an already existing CISC

© ISO/IEC 2004 All rights reserved
Copyright International Organization for Standardization
Reproduced by IHS under license with ISO
No reproduction or networking permitted without license from IHS
Not for Resale

Figure B.3 and B.4 show examples of unsuccessful invocation and operation of SS-MCR initiated by the Requesting PINX due to different error conditions.

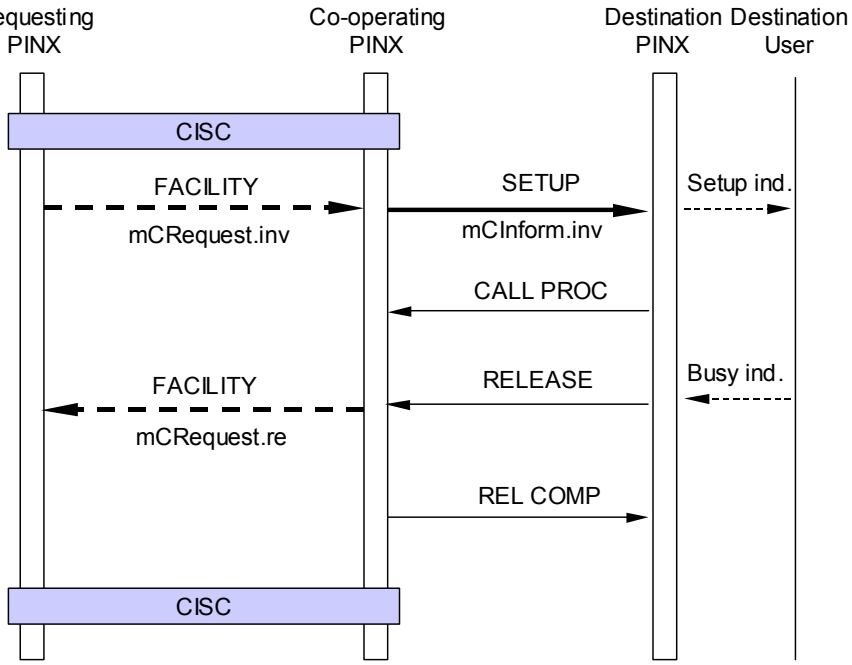

Figure B.3 — Example of unsuccessful invocation of SS-MCR due to busy Destination User

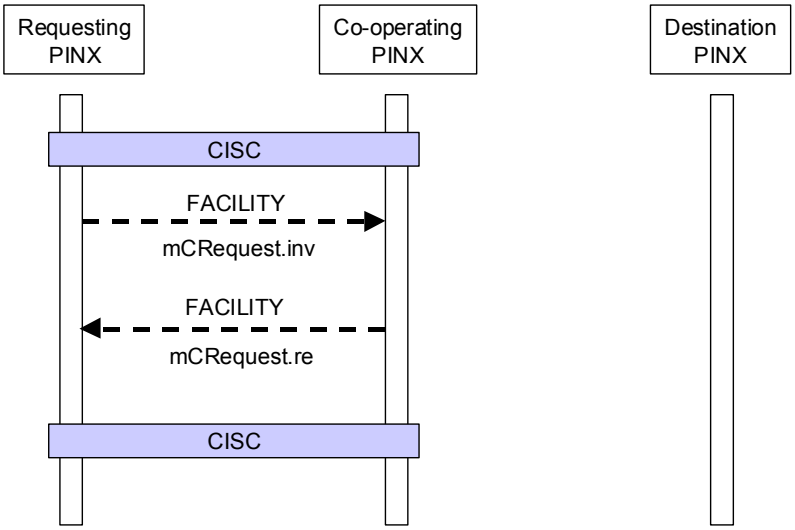

Figure B.4 — Example of unsuccessful invocation of SS-MCR due to not allowed request

© ISO/IEC 2004 – All rights reserved
Copyright International Organization for Standardization
Reproduced by IHS under license with ISO
No reproduction or networking permitted without license from IHS
Not for Resale

B.1.2 Example message sequences of a successful communication with a message centre

Figure B.5 shows an example for an application of SS-MCR for a Message Centre Application. Here the Requesting and Destination PINX are co-located at a Message Centre PINX complying with Profile-4 as defined in ISO/IEC 20115. SS-MCR is used in order to switch on/off a B-Channel for listening to a message. An already established CISC is used to signal to the Served/Co-operating PINX, that an additional B-Channel is needed. After retrieval of the message the B-channel is switched off again.

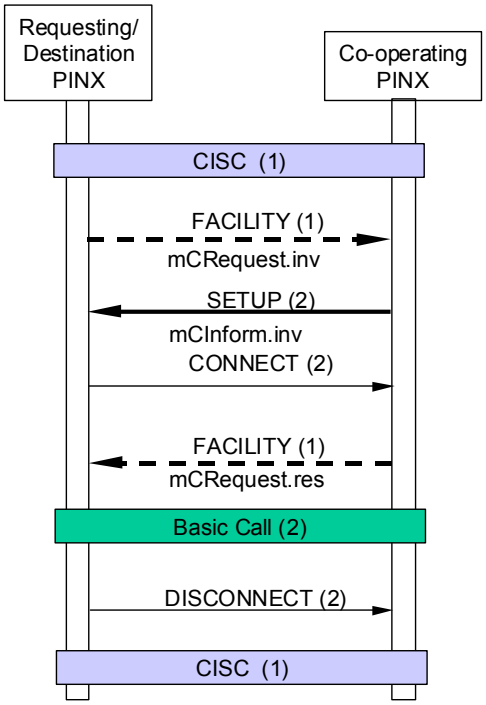

Figure B.5 — Example of successful invocation for SS-MCR with prior existing connection between a Co-operating PINX and a co-located Requesting/Destination PINX

© ISO/IEC 2004 All rights reserved

Copyright International Organization for Standardization
Reproduced by IHS under license with ISO
No reproduction or networking permitted without license from IHS
Not for Resale

Annex C
(informative)

Specification and Description Language (SDL) Representation of Procedures

The diagrams in this Annex use the Specification and Description Language defined in ITU-T Rec. Z.100 (1999).

Each diagram represents the behaviour of an SS-MCR Supplementary Service Control entity at a particular type of PINX. In accordance with the protocol model described in ISO/IEC 11582, the Supplementary Service Control entity uses, via the Coordination Function, the services of Generic Functional Procedures Control.

Where an output symbol represents a primitive to the Coordination Function, and that primitive results in a message being sent, the output symbol bears the name of the message and any remote operations APDU(s) or notification(s) contained in that message.

Where an input symbol represents a primitive from the Coordination Function, and that primitive is the result of a message being received, the input symbol bears the name of the message and any remote operations APDU(s) or notification(s) contained in that message. The following abbreviations are used:

.inv invoke APDU

.re return error APDU

.rej reject APDU

.res return result APDU

© ISO/IEC 2004 – All rights reserved
Copyright International Organization for Standardization
Reproduced by IHS under license with ISO
No reproduction or networking permitted without license from IHS
Not for Resale

C.1 SDL representation of SS-MCR at the Requesting PINX

Figures C.1 show the behaviour of an SS-MCR Supplementary Service Control entity within the Requesting PINX.

Input signals from the right and output signals to the right represent primitives from and to the Requesting User and internal signalling, e.g. timer expiry.

Input signals from the left and output signals to the left represent primitives from and to the Coordination Function in respect of messages received and sent.

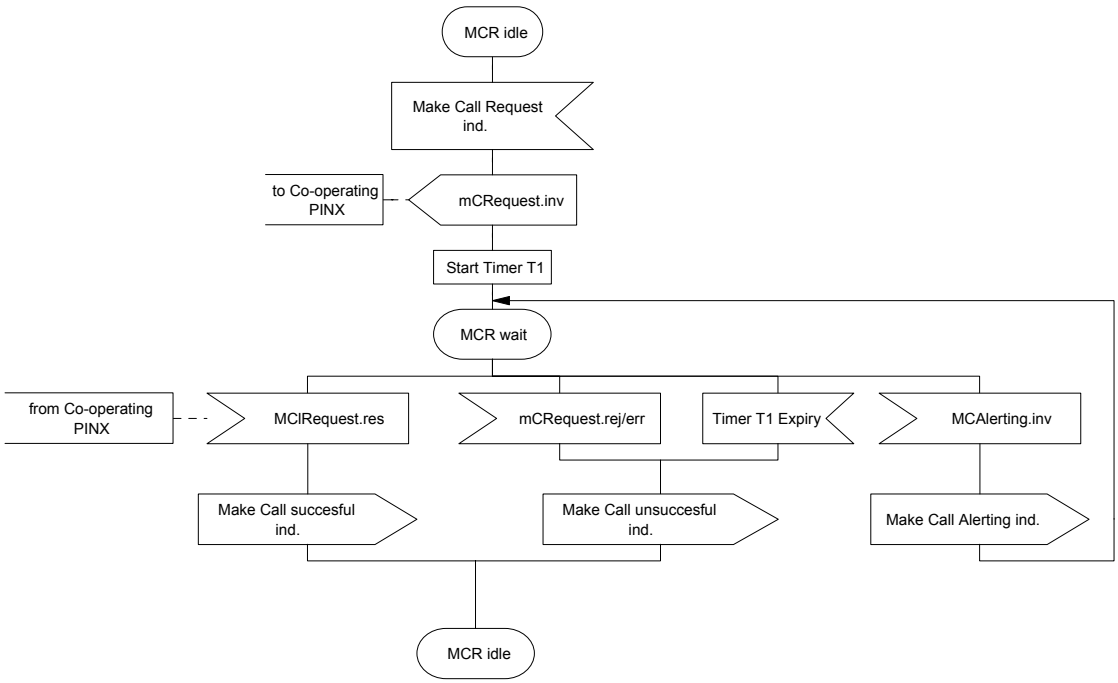

Figure C.1 — SDL representation of SS-MCR at the Requesting PINX

© ISO/IEC 2004 All rights reserved

Copyright International Organization for Standardization
Reproduced by IHS under license with ISO
No reproduction or networking permitted without license from IHS
Not for Resale

C.2 SDL representation of SS-MCR at the Co-operating PINX

Figures C.2 show the behaviour of an SS-MCR Supplementary Service Control entity within the Co-operating PINX.

Input signals from the right and output signals to the right represent primitives from and to the Co-operating User.

Input signals from the left and output signals to the left represent primitives from and to the Coordination Function in respect of messages received and sent.

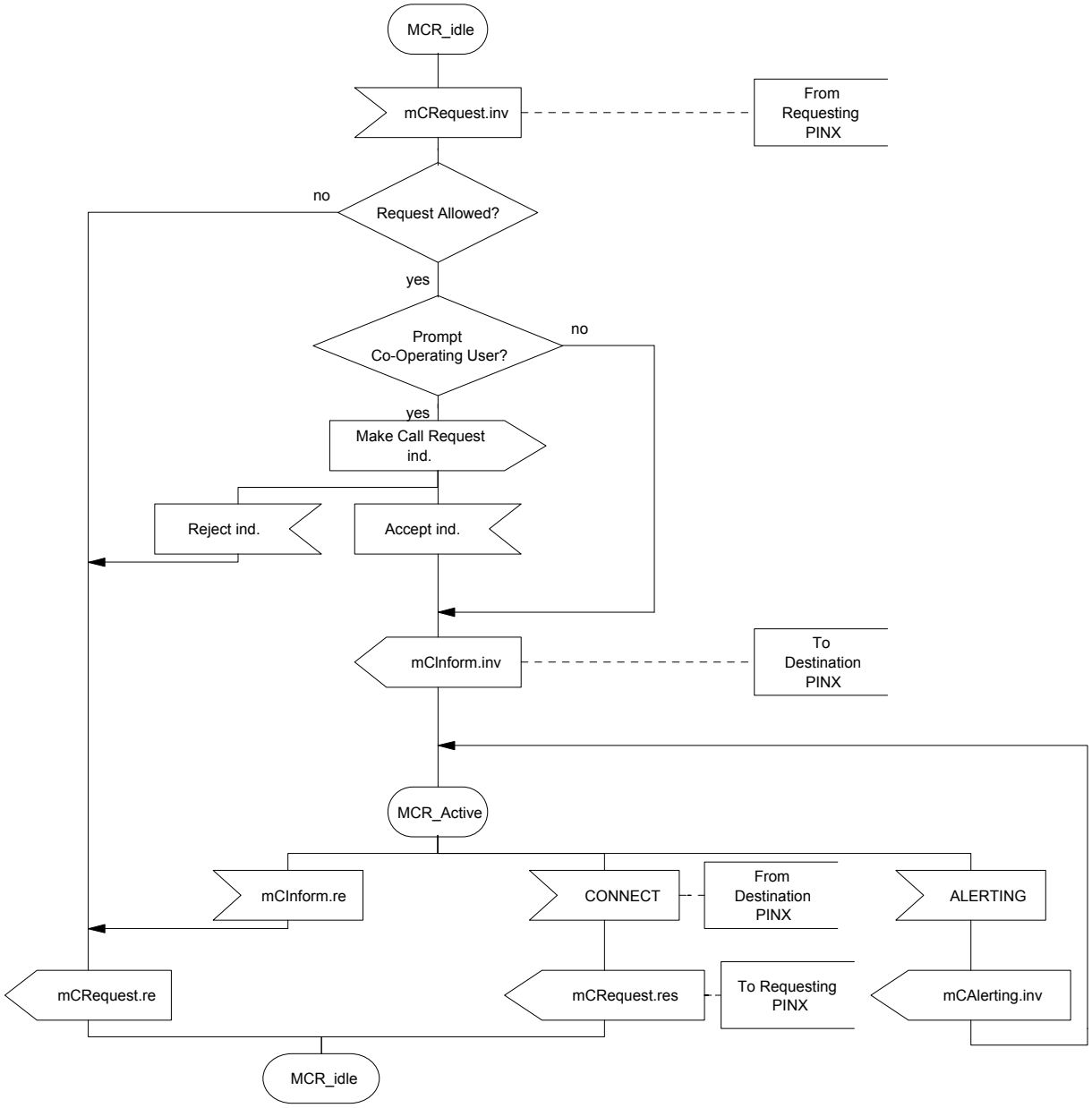

Figure C.2 — SDL representation of SS-MCR at the Co-operating PINX

--`,,`-`-`,,`,,`,`,,`---
© ISO/IEC 2004 – All rights reserved
Copyright International Organization for Standardization
Reproduced by IHS under license with ISO
No reproduction or networking permitted without license from IHS
Not for Resale

C.3 SDL representation of SS-MCR at the Destination PINX

Figures C.3 show the behaviour of an SS-MCR Supplementary Service Control entity within the Destination PINX.

Input signals from the right and output signals to the right represent primitives from and to the Destination User.

Input signals from the left and output signals to the left represent primitives from and to the Coordination Function in respect of messages received and sent.

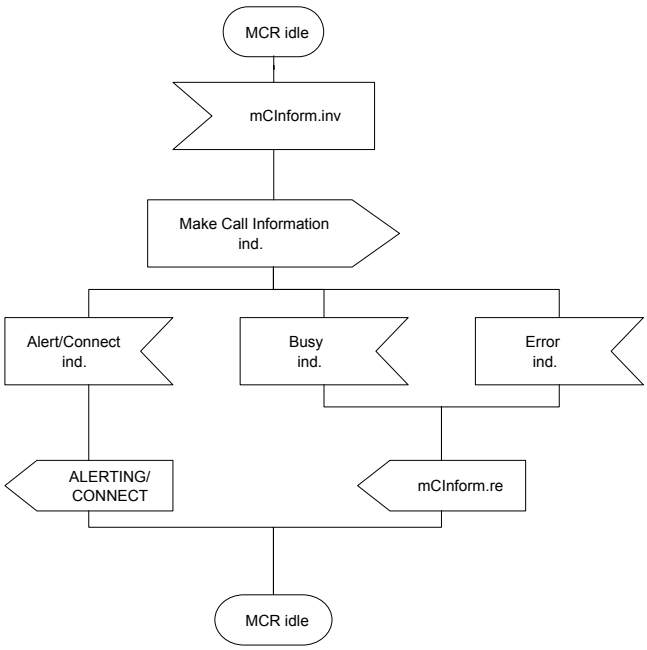

Figure C.3 — SDL representation of SS-MCR at the Destination PINX

© ISO/IEC 2004 All rights reserved

Copyright International Organization for Standardization
Reproduced by IHS under license with ISO
No reproduction or networking permitted without license from IHS
Not for Resale

ICS 33.040.35

Price based on 29 pages

© ISO/IEC 2004 – All rights reserved
Copyright International Organization for Standardization
Reproduced by IHS under license with ISO
No reproduction or networking permitted without license from IHS
Not for Resale