INTERNATIONAL STANDARD

ISO/IEC 20062

First edition
2001-12-15

Information technology — 8 mm wide magnetic tape cartridge for information interchange — Helical scan recording — VXA-1 format

Technologies de l'information — Cartouche de bande magnétique de 8 mm *de large pour échange d'informations — Enregistrement par balayage en spirale — Format VXA-1*

Reference number
ISO/IEC 20062:2001(E)

© ISO/IEC 2001

Copyright International Organization for Standardization
Provided by IHS under license with ISO
No reproduction or networking permitted without license from IHS

Not for Resale

PDF disclaimer

This PDF file may contain embedded typefaces. In accordance with Adobe's licensing policy, this file may be printed or viewed but shall not be edited unless the typefaces which are embedded are licensed to and installed on the computer performing the editing. In downloading this file, parties accept therein the responsibility of not infringing Adobe's licensing policy. The ISO Central Secretariat accepts no liability in this area.

Adobe is a trademark of Adobe Systems Incorporated.

Details of the software products used to create this PDF file can be found in the General Info relative to the file; the PDF-creation parameters were optimized for printing. Every care has been taken to ensure that the file is suitable for use by ISO member bodies. In the unlikely event that a problem relating to it is found, please inform the Central Secretariat at the address given below.

© ISO/IEC 2001

All rights reserved. Unless otherwise specified, no part of this publication may be reproduced or utilized in any form or by any means, electronic or mechanical, including photocopying and microfilm, without permission in writing from either ISO at the address below or ISO's member body in the country of the requester.

ISO copyright office
Case postale 56 • CH-1211 Geneva 20
Tel. + 41 22 749 01 11
Fax + 41 22 749 09 47
E-mail copyright@iso.ch
Web www.iso.ch

Printed in Switzerland

Copyright International Organization for Standardization
Provided by IHS under license with ISO
No reproduction or networking permitted without license from IHS

Not for Resale

© ISO/IEC 2001 – All rights reserved

Contents

Section 1 - General **1**

1 Scope **1**

2 Conformance **1**

2.1 Magnetic tape cartridges **1**
2.2 Generating drive **1**
2.3 Receiving drive **1**

3 Normative references **1**

4 Terms and definitions **2**

4.1 ac erase **2**
4.2 algorithm **2**
4.3 Average Signal Amplitude **2**
4.4 azimuth **2**
4.5 back surface **2**
4.6 Beginning of Data (BOD) **2**
4.7 Beginning of Tape (BOT) **2**
4.8 bit cell **2**
4.9 byte **2**
4.10 cartridge **2**
4.11 Channel bit **2**
4.12 Cyclic Redundancy Check (CRC) character **2**
4.13 End of Data (EOD) **2**
4.14 End of Partition (EOP) **2**
4.15 End of Tape (EOT) **2**
4.16 Error Correcting Code (ECC) **2**
4.17 File Mark **2**
4.18 Logical Block **2**
4.19 magnetic tape **2**
4.20 Master Standard Reference Tape **2**
4.21 Partition **2**
4.22 physical recording density **2**
4.23 Reference Field **2**
4.24 Secondary Standard Reference Tape (SSRT) **2**
4.25 Set Mark **2**
4.26 Standard Reference Amplitude (SRA) **3**
4.27 Standard Reference Current (Ir) **3**
4.28 Tape Reference Edge **3**
4.29 Test Recording Current (TRC) **3**
4.30 Track **3**
4.31 Typical Field **3**

5 Conventions and Notations **3**

5.1 Representation of numbers **3**
5.2 Names **3**

6 Acronyms **3**

© ISO/IEC 2001 – All rights reserved

Copyright International Organization for Standardization
Provided by IHS under license with ISO
No reproduction or networking permitted without license from IHS
Not for Resale

7	Environment and Safety	**4**
7.1	Testing environment	**4**
7.2	Operating environment	**4**
7.3	Storage environment	**4**
7.4	Transportation	**4**
7.5	Safety	**4**
7.6	Flammability	**4**
Section 2 - Requirements for the case		**4**
8	Dimensional and mechanical characteristics of the case	**4**
8.1	General	**4**
8.2	Overall dimension	**5**
8.3	Holding areas	**5**
8.4	Cartridge insertion	**6**
8.5	Window	**7**
8.6	Loading grips	**7**
8.7	Label areas	**7**
8.8	Datum areas and datum holes	**7**
8.9	Support areas	**8**
8.10	Recognition holes	**9**
8.11	Write-inhibit hole	**10**
8.12	Pre-positioning surfaces	**10**
8.13	Lid	**10**
8.14	Cartridge reel lock	**11**
8.15	Reel access holes	**12**
8.16	Interface between the reels and the drive spindles	**12**
8.17	Light path	**13**
8.18	Position of the tape in the case	**14**
8.19	Tape path zone	**14**
8.20	Tape access cavity	**15**
8.21	Tape access cavity clearance requirements	**15**
Section 3 - Requirements for the Unrecorded Tape		**32**
9	Mechanical, physical and dimensional characteristics of the tape	**32**
9.1	Materials	**32**
9.2	Length	**32**
9.2.1	Length of the magnetic tape	**32**
9.2.2	Length of leader and trailer tapes	**32**
9.2.3	Length of the splicing tape	**32**
9.3	Width	**32**
9.3.1	Width of magnetic, leader and trailer tape	**32**
9.3.2	Width and position of the splicing tape	**33**
9.3.3	Edge weave	**33**
9.4	Discontinuities	**34**
9.5	Thickness	**34**
9.5.1	Thickness of the magnetic tape	**34**
9.5.2	Thickness of leader and trailer tape	**34**
9.5.3	Thickness of the splice tape	**34**
9.6	Longitudinal curvature	**34**
9.7	Cupping	**34**
9.8	Coating adhesion	**34**
9.9	Layer-to-layer adhesion	**35**
9.10	Tensile strength	**35**
9.10.1	Breaking strength	**35**
9.10.2	Yield strength	**35**
9.11	Residual elongation	**36**
9.12	Electrical resistance of the recording surface	**36**

Copyright International Organization for Standardization
Provided by IHS under license with ISO
No reproduction or networking permitted without license from IHS
Not for Resale
© ISO/IEC 2001 – All rights reserved

9.13 Tape winding **36**
9.14 Light transmittance of tape **36**

10 Magnetic recording characteristics **36**

10.1 Test conditions **37**
10.2 Typical Recording Current **37**
10.3 Signal Amplitude **37**
10.4 Resolution **37**
10.5 Signal-to-Noise Ratio **37**
10.6 Ease of erasure **38**
10.7 Tape quality **38**
10.7.1 Missing pulses **38**
10.7.2 Missing pulse zone **38**
10.7.3 Overwrite **38**

Section 4 - Requirements for an Interchanged Tape **38**

11 Track Format **38**

11.1 General **38**
11.2 Physical Logical Block Format **39**
11.2.1 Logical Block Set (LBS) **39**
11.2.2 Logical Blocks **40**
11.2.3 Segment Packets **40**
11.2.4 Segment Overhead Packets **40**
11.2.5 Skipped Segment Packets **44**
11.2.6 Segment ECC packets **44**
11.2.7 Segment flush **45**
11.3 Track Packet format **45**
11.3.1 Virtual Packet Address **45**
11.3.2 Local Packet Address **45**
11.3.3 Packet data **47**
11.3.4 Packet CRC **48**
11.3.5 Packet Reed-Solomon ECC **48**
11.4 Control packet format **48**
11.5 Packet framing sync **51**

12 Tape Format **51**

12.1 Track elements **52**
12.2 Data track format **52**
12.2.1 Order of packets in a data track **52**
12.2.2 Rewrite **52**
12.3 Gap tracks **53**

13 Method of recording **54**

13.1 Physical recording density **54**
13.1.1 Long-term average bit cell length **54**
13.1.2 Short-term average bit cell length **54**
13.1.3 Rate of change **54**
13.2 Bit shift **54**
13.3 Amplitude of Data Signals **54**

14 Track geometry **54**

14.1 General **54**
14.2 Track pitch **55**
14.3 Average track pitch **55**
14.4 Track width **55**
14.5 Track angle **55**
14.6 Track length **55**
14.7 Guard band **55**

Copyright International Organization for Standardization
Provided by IHS under license with ISO
No reproduction or networking permitted without license from IHS
All rights reserved
Not for Resale

14.8 Azimuth angles **56**
14.9 Track linearity **56**

15 Layout of a tape **56**

15.1 General **56**
15.2 Beginning of Partition **56**
15.3 Tape Header Record (THR) **56**
15.4 Data area **57**
15.5 Tape Directory Record **57**
15.6 End of Data **58**
15.7 End of Partition (EOP) **58**

Annexes

A - Measurement of Light Transmittance of Tape and Leaders **59**

B - The Packet ECC **62**

C - The Segment ECC **63**

D - Generation of the Segment Overhead CRCs **64**

E - Generation of the Segment Data CRC **65**

F - Generation of the Packet CRC **66**

G - Representation of 8-bit bytes by 14-bit patterns **67**

H - Measurement of bit shift **75**

J - Tape Count **77**

K - Recommendations for transportation **78**

Copyright International Organization for Standardization
Provided by IHS under license with ISO
No reproduction or networking permitted without license from IHS
Not for Resale

© ISO/IEC 2001 – All rights reserved

Foreword

ISO (the International Organization for Standardization) and IEC (the International Electrotechnical Commission) form the specialized system for worldwide standardization. National bodies that are members of ISO or IEC participate in the development of International Standards through technical committees established by the respective organization to deal with particular fields of technical activity. ISO and IEC technical committees collaborate in fields of mutual interest. Other international organizations, governmental and non-governmental, in liaison with ISO and IEC, also take part in the work. In the field of information technology, ISO and IEC have established a joint technical committee, ISO/IEC JTC 1.

International Standards are drafted in accordance with the rules given in the ISO/IEC Directives, Part 3.

The main task of the joint technical committee is to prepare International Standards. Draft International Standards adopted by the joint technical committee are circulated to national bodies for voting. Publication as an International Standard requires approval by at least 75 % of the national bodies casting a vote.

Attention is drawn to the possibility that some of the elements of this International Standard may be the subject of patent rights. ISO and IEC shall not be held responsible for identifying any or all such patent rights.

ISO/IEC 20062 was prepared by ECMA (as Standard ECMA-316) and was adopted, under a special “fast-track procedure”, by Joint Technical Committee ISO/IEC JTC 1, *Information technology*, in parallel with its approval of national bodies of ISO and IEC.

Annexes A to J form a normative part of this International Standard. Annex K is for information only.

Copyright International Organization for Standardization
Provided by IHS under license with ISO
No reproduction or networking permitted without license from IHS
Not for Resale

Information technology - 8 mm wide magnetic tape cartridge for information interchange - Helical scan recording - VXA-1 format

Section 1 - General

1 Scope

This International Standard specifies the physical and magnetic characteristics of an 8 mm wide magnetic tape cartridge to enable physical interchange of such cartridges between drives. It also specifies the quality of the recorded signals, the recording method and the recorded format called VXA-1, and thereby allowing data interchange between drives by means of such magnetic tape cartridges.

This International Standard specifies three types depending on the length of magnetic tape contained in the case, referred to as Type A, Type B and Type C.

Information interchange between systems also requires, at a minimum, agreement between the interchange parties upon the interchange code(s) and the specifications of the structure and labelling of the information on the interchanged cartridge.

If compression is used with this format, it shall be according to International Standard ISO/IEC 15200.

2 Conformance

2.1 Magnetic tape cartridges

A magnetic tape cartridge shall be in conformance with this International Standard if it satisfies all mandatory requirements of this International Standard throughout the extent of the tape.

2.2 Generating drive

A drive generating a magnetic tape cartridge for interchange shall be entitled to claim conformance with this International Standard if all the recordings that it makes on a tape meet the mandatory requirements of this International Standard. A claim of conformance shall state whether or not the registered compression algorithm specified in ISO/IEC 15200 is implemented within the system to process data from the host prior to allocating data to segment data packets.

2.3 Receiving drive

A system receiving a magnetic tape cartridge for interchange shall be entitled to claim conformance with this International Standard if it is able to handle any recording on this tape according to this International Standard. A receiving drive shall be able to recognise the use of the data compression algorithm specified in ISO/IEC 15200.

3 Normative references

The following normative documents contain provisions which, through reference in this text, constitute provisions of this International Standard. For dated references, subsequent amendments to, or revisions of, any of these publications do not apply. However, parties to agreements based on this International Standard are encouraged to investigate the possibility of applying the most recent editions of the normative documents indicated below. For undated references, the latest edition of the normative document referred to applies. Members of ISO and IEC maintain registers of currently valid International Standards.

ISO/IEC 15200:1996	*Information technology - Adaptive Lossless Data Compression algorithm (ALDC)*
ISO 527-3:1995	*Plastics - Determination of tensile properties - Part 3: Test conditions for films and sheets*
ISO 1302:—[1)]	*Geometrical Product Specifications (GPS) - Indication of surface texture in technical product documentation*
ISO/IEC 11576:1994	*Information technology - Procedure for the registration of algorithms for the lossless compression of data*
IEC 60950-1:2001	*Information technology equipment - Safety - Part 1: General requirements*

1) To be published. (Revision of ISO 1302:1992)

© ISO/IEC 2001 – All rights reserved

Copyright International Organization for Standardization
Provided by IHS under license with ISO
No reproduction or networking permitted without license from IHS
Not for Resale

4 Terms and definitions

For the purposes of this International Standard, the following terms and definitions apply.

4.1 **ac erase:** A process of erasure utilising alternating magnetic fields of decaying intensity.

4.2 **algorithm:** A set of rules for transforming the logical representation of data.

4.3 **Average Signal Amplitude:** The average peak-to-peak value of the output signal from the read head at a density of 2 740 ftpmm measured over a minimum distance of 100 mm, exclusive of missing pulses.

4.4 **azimuth:** The angular deviation, in degrees of arc, of the recorded flux transitions on a track from a line normal to the track centreline.

4.5 **back surface:** The surface of the tape opposite to the magnetic coating used to record data.

4.6 **Beginning of Data (BOD):** The point in a partition after which a recording of data for interchange commences.

4.7 **Beginning of Tape (BOT):** The transition from the tape leader to an opaque area of the splice by which a translucent leader tape is joined to the magnetic tape.

4.8 **bit cell:** A distance along the track allocated for the recording of a Channel bit.

4.9 **byte:** An ordered set of bits acted upon as a unit.

4.10 **cartridge:** A case containing magnetic tape stored on twin reels.

4.11 **Channel bit:** A bit after 8-14 transformation.

4.12 **Cyclic Redundancy Check (CRC) character:** A character derived from information contained in data bytes that is used for error detection.

4.13 **End of Data (EOD):** The point in a partition before which a recording of data for interchange ends.

4.14 **End of Partition (EOP):** The virtual point along the length of tape at which a partition ends.

4.15 **End of Tape (EOT):** The transition from an opaque area of the splice to a translucent trailer tape.

4.16 **Error Correcting Code (ECC):** A mathematical procedure yielding bytes used for the detection and correction of errors.

4.17 **File Mark:** A mark recorded on the tape at the request of the host system to separate files or to provide an append point. This format provides for Long and Short File Marks.

4.18 **Logical Block:** Information (data) sent to the tape drive to be recorded.

4.19 **magnetic tape:** A tape that accepts and retains magnetic signals intended for input, output, and storage of data for information processing.

4.20 **Master Standard Reference Tape:** A tape selected as the standard for Signal Amplitude, Typical Recording Current, Overwrite and Resolution.

Note - The Master Standard Reference Tape has been established by Ecrix Corporation.

4.21 **Partition:** A formatted length of tape used to record data.

4.22 **physical recording density:** The number of recorded flux transitions per unit length of track, expressed in flux transitions per millimetre (ftpmm).

4.23 **Reference Field:** The Typical Field of the Master Standard Reference Tape.

4.24 **Secondary Standard Reference Tape (SSRT):** A tape the performance of which is known and stated in relation to that of the Master Standard Reference Tape.

Note - Secondary Standard Reference Tapes can be ordered under the Part Number 111.00124 from Ecrix Corporation, 5525 Central Avenue, Boulder, Co. 80301, USA.

In principle, such tapes will be available for a period of 10 years from the publication of the first edition of this International Standard. However, by agreement between ECMA and Ecrix Corporation, this period may be shortened or extended to take account of demand for such tapes.

It is intended that these be used for calibrating Tertiary Reference Tapes for use in routine calibration.

4.25 **Set Mark:** A mark recorded on the tape at the request of the host system to separate a set of data or to provide an append point.

© ISO/IEC 2001 – All rights reserved
Copyright International Organization for Standardization
Provided by IHS under license with ISO
No reproduction or networking permitted without license from IHS
Not for Resale

4.26 Standard Reference Amplitude (SRA): The Average Signal Amplitude derived from the Master Standard Reference Tape, using the Test Recording Current at 2 740 ftpmm.

4.27 Standard Reference Current (Ir): The current that produces the Reference Field.

4.28 Tape Reference Edge: The lower edge of tape as seen when viewing the recording surface of the tape with the supply reel to the observer's right.

4.29 Test Recording Current (TRC): The current used to record the SRA. The TRC is 1,4 times the Standard Reference Current.

4.30 Track: A diagonally positioned area on the tape along which a series of magnetic transitions may be recorded.

4.31 Typical Field: In the plot of the Average Signal Amplitude against the recording field at the physical recording density of 2 740 ftpmm, the minimum field that causes an Average Signal Amplitude equal to 90 % of the maximum Average Signal Amplitude.

5 Conventions and Notations

5.1 Representation of numbers

A measured value is rounded off to the least significant digit of the corresponding specified value. It implies that a specific value of 1,26 with a positive tolerance of +0,01, and a negative tolerance of -0,02 allows a range of measured values from 1,235 to 1,275.

- Letters and digits in parentheses represent numbers in hexadecimal notation.
- The setting of a bit is denoted by ZERO or ONE.
- Numbers in binary notation and bit combinations are represented by strings of digits 0 and 1.
- Numbers in binary notation and bit combinations are shown with the most significant byte to the left, and with the most significant bit in each byte to the left.
- Negative values of numbers in binary notation are given in Two's complement.
- In each field the data is processed so that the most significant byte (byte 0) is processed first. Within each byte the most significant bit (numbered 7 in an 8-bit byte) is processed first, least significant bit is numbered 0 and is processed last. This order of processing applies also to the data input to the Error Detection and Correction circuits and to their output, unless otherwise stated.

5.2 Names

The names of entities, e.g. specific tracks, fields, etc., are given with a capital initial letter.

6 Acronyms

CRC Cyclic Redundancy Check
BOD Beginning of Data
BOT Beginning of Tape
ECC Error Correction Code
EOD End of Data
EOT End of Tape
LB Logical Block
LBA Logical Block Address
LBS Logical Block Set
lsb Least Significant Bit
LSB Least Significant Byte
msb Most Significant Bit
MSB Most significant Byte
OWG Overwritable Gap
SPM Splice Position Marker
SRA Standard Reference Amplitude
SSRT Secondary Standard Reference Tape
TDR Tape Directory Record
THR Tape header Record
VPA Virtual Packet Address

© ISO/IEC 2001 – All rights reserved

Copyright International Organization for Standardization
Provided by IHS under license with ISO
No reproduction or networking permitted without license from IHS
Not for Resale

7 Environment and Safety

The conditions specified below refer to the ambient conditions immediately surrounding the cartridge.

Cartridges exposed to environments outside these limits may still be able to function usefully; however, such exposure may cause permanent damage.

7.1 Testing environment

Unless otherwise specified, tests and measurements made on the cartridge to check the requirements of this International Standard shall be carried out under the following conditions

temperature:	23 °C ± 2 °C
relative humidity:	40 % to 60 %
conditioning period before testing:	24 h min.

7.2 Operating environment

Cartridges used for data interchange shall be capable of operating under the following conditions

temperature:	5 °C to 45 °C
relative humidity:	20 % to 80 %
wet bulb temperature:	26 °C max.

The average temperature of the air immediately surrounding the tape shall not exceed 45°C.

If a cartridge has been exposed during storage and/or transportation to conditions outside the above values, before use the cartridge shall be conditioned in the operating environment for a time at least equal to the period during which it has been out of the operating environment, up to a maximum of 24 h.

7.3 Storage environment

The following conditions shall be observed during storage

temperature:	5 °C to 32 °C
relative humidity:	20 % to 60 %
stray magnetic field:	shall not exceed 4 000 A/m at any point on the tape.

There shall be no deposit of moisture on or in the cartridge.

7.4 Transportation

Recommended limits for the environments, to which a cartridge may be subjected during transportation, and the precautions to be taken to minimise the possibility of damage, are provided in annex K.

7.5 Safety

The cartridge shall satisfy the safety requirements of IEC 60950-1 when used in the intended manner or in any foreseeable use in an information processing system.

7.6 Flammability

The cartridge shall be made from materials that comply with the flammability class for HB materials, or better, as specified in IEC 60950-1.

Section 2 - Requirements for the case

8 Dimensional and mechanical characteristics of the case

8.1 General

The cartridge shall consist of the following elements:

- a case
- recognition holes
- a write inhibit mechanism
- twin reels containing magnetic tape
- a locking mechanism for the reels

© ISO/IEC 2001 – All rights reserved
Copyright International Organization for Standardization
Provided by IHS under license with ISO
No reproduction or networking permitted without license from IHS
Not for Resale

Dimensional characteristics are specified for those parameters deemed to be mandatory for interchange and compatible use of the cartridge. Where there is freedom of design, only the functional characteristics of the elements described are indicated. In the figures a typical implementation is represented in third angle projections.

Figure 1 shows a perspective view of the cartridge seen from the top.
Figure 2 shows a perspective view of the cartridge seen from the bottom.
Figure 3 shows a perspective view of Reference Planes X, Y and Z.
Figure 4 shows the front side with the lid closed.
Figure 5 shows the left side with the lid closed.
Figure 6 shows the top side with the lid closed.
Figure 7 shows the right side with the lid closed.
Figure 8 shows the rear side with the lid closed.
Figure 9 shows the bottom side, datum and support areas.
Figure 10 shows the bottom side with the lid removed.
Figure 11 shows the enlarged view of the datum and recognition holes.
Figure 12 shows cross-sections through the light path holes, the recognition holes and the write-inhibit hole.
Figure 13 shows details of the lid when closed, rotating and open.
Figure 14 shows details of the lid release insertion channel.
Figure 15 shows the lid lock release requirements.
Figure 16 shows the reel lock release requirements.
Figure 17 shows the reel unlock force direction.
Figure 18 shows the lid release force direction.
Figure 19 shows the lid opening force direction.
Figure 20 shows the light path and light window.
Figure 21 shows the internal tape path and light path.
Figure 22 shows the cartridge reel and a cross-section view of the cartridge reel.
Figure 23 shows a cross-section view of the cartridge reel interface with the drive spindle.
Figure 24 shows the tape access cavity clearance requirements.

The dimensions are referred to three orthogonal Reference Planes X, Y and Z (see figure 3).

Plane X is perpendicular to Plane Z and passes through the centres of the Datum Holes A and B.

Plane Y is perpendicular to Plane X and Plane Z and passes through the centre of Datum Hole A.

Datum area A, B and C shall lie in Plane Z.

8.2 Overall dimension (figures 5 and 6)

The length of the case shall be

$l_1 = 62{,}5 \text{ mm} \pm 0{,}3 \text{ mm}$

The width of the case shall be

$l_2 = 95{,}0 \text{ mm} \pm 0{,}2 \text{ mm}$

The distance from the top of the case to Plane Z shall be

$l_3 = 15{,}0 \text{ mm} \pm 0{,}2 \text{ mm}$

The distance from the rear side to Plane X shall be

$l_4 = 47{,}35 \text{ mm} \pm 0{,}15 \text{ mm}$

The distance from the right side to Plane Y shall be

$l_5 = 13{,}0 \text{ mm} \pm 0{,}1 \text{ mm}$

8.3 Holding areas (figure 6)

The holding areas shown hatched in figure 6 shall be the areas along which the cartridge shall be held down when inserted into the drive. The distance of the holding areas from Plane X shall be

$l_6 = 12{,}0 \text{ mm max.}$

The width when measured from the edge of the case shall be

$l_7 = 3{,}0 \text{ mm min.}$

© ISO/IEC 2001 – All rights reserved

Copyright International Organization for Standardization
Provided by IHS under license with ISO
No reproduction or networking permitted without license from IHS
Not for Resale

8.4 Cartridge insertion (figures 4, 7, 10, 13 and 14)

The cartridge shall have asymmetrical features to prevent insertion into the drive in other than the correct orientation. These consist of an insertion channel, a recess and an incline.

The insertion channel (figures 4 and 14) shall provide for an unobstructed path, when the lid is closed and locked, to unlock the lid. The distance of the insertion channel from Plane Y shall be

$l_8 = 79{,}7 \text{ mm} \pm 0{,}2 \text{ mm}$

There shall be a chamfer at the beginning of the insertion channel defined by

$l_9 = 1{,}0 \text{ mm} \pm 0{,}1 \text{ mm}$

$l_{16} = 1{,}5 \text{ mm} \pm 0{,}1 \text{ mm}$

An additional chamfer further into the insertion channel shall be defined by

$l_{10} = 0{,}7 \text{ mm} \pm 0{,}1 \text{ mm}$

$l_{17} = 1{,}0 \text{ mm} \pm 0{,}1 \text{ mm}$

$l_{18} = 3{,}8 \text{ mm} \pm 0{,}1 \text{ mm}$

The innermost width of the insertion channel shall be

$l_{11} = 1{,}0 \text{ mm min.}$

The thickness of the lid shall be

$l_{12} = 1{,}2 \text{ mm} \pm 0{,}1 \text{ mm}$

There shall be a chamfer on the lid defined by

$l_{13} = 0{,}8 \text{ mm} \pm 0{,}1 \text{ mm}$

$l_{14} = 1{,}2 \text{ mm} \pm 0{,}1 \text{ mm}$

The lid shall extend from the case a distance of

$l_{15} = 0{,}5 \text{ mm} \pm 0{,}1 \text{ mm}$

The distance from the left side of the case to the lid lock shall be

$l_{19} = 0{,}2 \text{ mm} \pm 0{,}2 \text{ mm}$

The height of the insertion area shall be

$l_{20} = 2{,}3 \text{ mm min.}$

$l_{21} = 2{,}5 \text{ mm} \begin{matrix} + 0{,}2 \text{ mm} \\ - 0{,}0 \text{ mm} \end{matrix}$

The recess is located on the right side of the cartridge. The position and dimensions (figures 7 and 10) shall be defined by

$l_{22} = 7{,}5 \text{ mm max.}$

$l_{23} = 11{,}0 \text{ mm} \pm 0{,}2 \text{ mm}$

$l_{24} = 1{,}5 \text{ mm} \pm 0{,}1 \text{ mm}$

The depth of the recess shall be

$l_{25} = 1{,}5 \text{ mm} \pm 0{,}1 \text{ mm}$

The incline (figure 13) is part of the lid structure. The distance of the incline from Plane X shall be defined by

$l_{26} = 7{,}7 \text{ mm} \begin{matrix} + 0{,}0 \text{ mm} \\ - 2{,}5 \text{ mm} \end{matrix}$

The angle of the incline shall be

$a_1 = 20^{\circ} \pm 1^{\circ}$

© ISO/IEC 2001 – All rights reserved
Copyright International Organization for Standardization
Provided by IHS under license with ISO
No reproduction or networking permitted without license from IHS
Not for Resale

The incline shall end at its intersection with radius r_3 (see 8.13).

8.5 Window (figure 1)

A window may be provided on the top side so that parts of the reels are visible. The window, if provided, shall not extend beyond the height of the cartridge.

8.6 Loading grips (figures 5 and 7)

The cartridge shall have a recessed loading grip on the right side and on the left side to allow handling by an automatic loading mechanism.

The distance from Plane X to the centreline of the loading grip shall be

l_{28} = 39,35 mm ± 0,20 mm;

The distance from Plane Z on the bottom side and from the top side shall be

l_{29} = 1,5 mm ± 0,1 mm;

The width of the indent shall be

l_{30} = 5,0 mm ± 0,3 mm;

The depth of the indent shall be

l_{31} = 2,0 mm ± 0,2 mm;

and the angle of the indent

$a_2 = 90^o \pm 5^o$.

8.7 Label areas (figures 6 and 8)

A portion of the rear side of the cartridge and a portion of the top side of the cartridge may be used for labels. The position and the size of the labels shall not interfere with the operation or clearance requirements of the cartridge component parts.

The area used for labels on the top side shall not extend beyond the inner edge of the holding areas defined by l_6 and l_7.

The position and dimensions of the label area on the rear side shall be defined by

l_{32} = 0,5 mm min.

l_{33} = 1,5 mm min.

l_{34} = 80,0 mm max.

The label areas shall not be recessed by more than 0,3 mm.

8.8 Datum areas and datum holes (figures 9, 10 and 11)

The annular datum areas A, B and C shall lie in Plane Z. They determine the vertical position of the cartridge in the drive. Each shall have a diameter d_1 equal to 6,0 mm ± 0,1 mm and be concentric with the respective datum hole.

The centres of datum holes A and B lie in Plane X.

The centre of the circular datum hole A shall be at the intersection of planes X and Y (see figure 9).

The distance from the centre of datum hole B to Plane Y (see figure 9) shall be

l_{35} = 68,0 mm ± 0,1 mm

The distance from the centre of the circular datum hole C to Plane Y (see figure 11) shall be

l_{36} = 10,20 mm ± 0,05 mm

The distance from the centre of datum hole D to Plane Y (see figure 11) shall be

l_{37} = 79,2 mm ± 0,1 mm

The distance from the centres of datum holes C and D to Plane X (see figure 10) shall be

l_{38} = 36,35 mm ± 0,08 mm

© ISO/IEC 2001 – All rights reserved

Copyright International Organization for Standardization
Provided by IHS under license with ISO
No reproduction or networking permitted without license from IHS
Not for Resale

The thickness of the case in the datum areas shall be

l_{39} = 1,2 mm ± 0,1 mm

The diameter at the bottom of datum hole A and datum hole C shall be

l_{40} = 2,6 mm min.

The depth of the holes shall be

l_{42} = 4,0 mm min.

The upper diameter of datum holes A and C shall be

$l_{44} = 3{,}00\ \text{mm}\ ^{+\ 0{,}05\ \text{mm}}_{-\ 0{,}00\ \text{mm}}$

This diameter shall be to a depth of

l_{41} = 1,5 mm min.

There shall be a chamfer around the outside of datum hole A and datum hole C defined by

l_{43} = 0,3 mm max.

$a_3 = 45^{\circ} \pm 1^{\circ}$

The width at the bottom of datum holes B and D shall be l_{40}.

The depth of the holes shall be l_{42}.

The dimensions at the top of the holes shall be

l_{45} = 3,5 mm ± 0,1 mm

$l_{46} = 3{,}00\ \text{mm}\ ^{+\ 0{,}05\ \text{mm}}_{-\ 0{,}00\ \text{mm}}$

r_1 = 1,75 mm ± 0,05 mm

This width shall be to a depth l_{41}.

There shall be a chamfer around the outside of datum holes B and D defined by l_{43} and a_3.

8.9 Support areas (figure 9)

The cartridge Support areas are shown shaded in figure 9. Support areas A, B and C shall be coplanar with Datum areas A, B and C, respectively, within 0,1 mm. Support area D shall be coplanar with Plane Z within 0,15 mm.

The areas within l_{49} of the edge of the cartridge shall be recessed from the Support Areas.

l_{49} = 0,5 mm ± 0,1 mm

Support areas A and B shall extend from Plane X towards the front of the case a distance

l_{47} = 10,0 mm ± 0,1 mm

Support areas A and B shall extend from the centre of the Datum holes toward the outside of the case a distance l_{47}.

Support areas A and B shall extend from the centre of the Datum holes toward the inside of the case a distance of

l_{48} = 11,0 mm ± 0,1 mm

Support areas A and B shall extend from Plane X toward the rear of the case a distance of

l_{50} = 7,0 mm ± 0,1 mm

The distance of Support areas C and D from Plane X shall be

l_{51} = 30,0 mm ± 0,1 mm

The dimensions of Support areas C and D shall be defined by l_{47} and

l_{52} = 5,5 mm ± 0,1 mm

l_{53} = 64,5 mm ± 0,2 mm

© ISO/IEC 2001 – All rights reserved
Copyright International Organization for Standardization
Provided by IHS under license with ISO
No reproduction or networking permitted without license from IHS
Not for Resale

8.10 Recognition holes (figures 10, 11 and 12)

There shall be 6 recognition holes numbered 1 to 6 as shown in figure 11.

The centre of recognition hole 1 shall be defined by l_{55} and l_{56}.

The centre of recognition hole 2 shall be defined by

l_{54} = 43,35 mm ± 0,15 mm

l_{61} = 10,0 mm ± 0,1 mm

The centre of recognition hole 3 shall be defined by l_{54} and l_{57}.

The centre of recognition hole 4 shall be defined by l_{54} and

l_{58} = 79,0 mm ± 0,2 mm

The centre of recognition hole 5 shall be defined by

l_{55} = 3,7 mm ± 0,1 mm

l_{56} = 2,3 mm ± 0,1 mm

Recognition hole 6 shall be defined by

l_{96} = 46,0 mm ± 0,1 mm

l_{97} = 3,4 mm $^{+\ 0,1\ \text{mm}}_{-\ 0,0\ \text{mm}}$

l_{98} = 26,4 mm ± 0,05 mm

l_{99} = 3,60 mm $^{+\ 0,05\ \text{mm}}_{-\ 0,00\ \text{mm}}$

Recognition holes 1 to 5 shall have the cross-section E-E and F-F shown in figure 12 and shall have a diameter of 3,0 mm ± 0,1 mm.

Recognition hole 6 shall have the cross-section M-M shown in figure 12.

The depth of a closed recognition hole below Plane Z shall be

l_{59} = 1,2 mm $^{+0,3\ \text{mm}}_{-\ 0,1\ \text{mm}}$

The depth of an open recognition hole below Plane Z shall be

l_{60} = 5,0 mm min.

One of the cross-sections shows a recognition hole closed by a plug. The other shows one hole with the plug punched out and the other hole closed by a plug. These plugs shall withstand an applied force of 0,5 N without being punched out.

This International Standard prescribes the following states of these holes for Type A Tape Cartridges.

- Recognition hole 1 shall be closed.
- Recognition hole 2 shall be open.
- Recognition hole 3 shall be closed.
- Recognition hole 4 shall be open.
- Recognition hole 5 shall be closed.
- Recognition hole 6 shall be open.

This International Standard prescribes the following states of these holes for Type B and Type C Tape Cartridges.

- Recognition hole 1 shall be closed.
- Recognition hole 2 shall be open.
- Recognition hole 3 shall be open.
- Recognition hole 4 shall be closed.
- Recognition hole 5 shall be closed.
- Recognition hole 6 shall be open.

--`,,```,,,,````-`-`,,`,,`,`,,`---

© ISO/IEC 2001 – All rights reserved

Copyright International Organization for Standardization
Provided by IHS under license with ISO
No reproduction or networking permitted without license from IHS
Not for Resale

8.11 Write-inhibit hole (figures 11 and 12)

The centre of the Write-inhibit hole shall be defined by l_{54} and

l_{57} = 6,4 mm ± 0,1 mm

The diameter of the hole shall be 3,0 mm ± 0,1 mm.

The depth of a closed Write-inhibit hole below Plane Z shall be l_{59}.

The depth of an open Write-inhibit hole below Plane Z shall be l_{60}.

When the Write-inhibit hole is open, recording on the tape is inhibited. When it is closed, recording is enabled.

The case may have a movable element allowing the Write-inhibit hole to be opened or closed. If present, this element shall be such that the state of the Write-inhibit hole shall be visible (see figure 8 as an example). The Write-inhibit hole closure shall be constructed to withstand a force of 0,5 N. The force required to open or close the Write-inhibit hole shall be between 1 N and 15 N.

8.12 Pre-positioning surfaces (figures 4 and 10)

These surfaces determine the position of the cartridge when it is inserted into the drive loading slot.

The distance from Plane Z to the surface on which the tape reference edge rests (figure 4) shall be

l_{62} = 2,4 mm $^{+\ 0,0\ \text{mm}}_{-\ 0,1\ \text{mm}}$

Positioning of the cartridge relative to Plane Y shall be controlled by the surfaces defined by

l_{63} = 1,0 mm ± 0,1 mm

l_{64} = 69,0 mm ± 0,2 mm

Positioning of the cartridge relative to Plane X shall be controlled by the surfaces defined by

l_{65} = 14,65 mm ± 0,10 mm

The position and angle of the chamfer at the edge of this surface shall be defined by

l_{66} = 13,15 mm ± 0,10 mm

$a_4 = 45^o \pm 1^o$

8.13 Lid (figures 6, 13, 15, 18 and 19)

The cartridge shall have a lid for protection of the tape during handling, storage and transportation. The lid consists of two parts, the main part and an auxiliary part.

The main part rotates around axis A (see figure 13) the position of which is fixed relative to the case.

The location of axis A shall be defined by

l_{27} = 0,55 mm $^{+\ 0,05\ \text{mm}}_{-\ 0,10\ \text{mm}}$

l_{67} = 7,5 mm ± 0,1 mm

The auxiliary part rotates around axis B the position of which is fixed relative to the main part of the lid and moves with it. When the lid is in the closed position, the location of axis B shall be defined by

l_{68} = 7,0 mm ± 0,1 mm
l_{69} = 10,1 mm ± 0,1 mm

The rotation of the auxiliary part is controlled by a cam at each end such that it follows the path indicated in figure 13.

The auxiliary part, when fully opened, shall allow a clearance of

l_{70} = 14,8 mm min.
l_{71} = 11,5 mm ± 0,2 mm
l_{72} = 1,2 mm ± 0,1 mm

© ISO/IEC 2001 – All rights reserved
Copyright International Organization for Standardization
Provided by IHS under license with ISO
No reproduction or networking permitted without license from IHS
Not for Resale

When the lid is completely open, neither part shall extend above a plane located l_{73} above and parallel to Plane Z.

l_{73} = 22,3 mm max.

The angle to the bottom of the lid from Plane Z when the lid is completely open shall be

$a_5 = 85^{o\ +1^{\circ}}_{\ \ -2^{o}}$

When the lid is in a partially open position, neither part shall extend above a plane located l_{74} above and parallel to Plane Z.

l_{74} = 22,5 mm max.

The path of the top of the lid as it opens shall be defined by

r_2 = 14,9 mm max.

The start point of the incline on the case that meets the lid (figure 6) shall be defined by

l_{75} = 8,4 mm max.

The height of the lid from Plane Z (figure 13) shall be

$l_{76} = 15{,}2\ \text{mm}^{\ +0{,}0\ \text{mm}}_{\ -0{,}5\ \text{mm}}$

The front of the lid measured from Plane X shall be

$l_{77} = 15{,}3\ \text{mm}^{\ +0{,}0\ \text{mm}}_{\ -0{,}3\ \text{mm}}$

The inside of the lid shall provide clearance for the tape defined by

l_{78} = 13,15 mm ± 0,10 mm

The top front of the lid shall have a radius r_3. The centre of the radius shall be axis A.

r_3 = 14,7 mm max.

The design of the locking mechanism is not specified by this International Standard except that it shall be operated by a release pin in the drive. The lid release mechanism shall be actuated when the drive release pin is in the shaded area (see figure 15) defined by

l_{79} = 2,0 mm ± 0,1 mm

l_{80} = 8,2 mm ± 0,2 mm

l_{81} = 0,7 mm ± 0,2 mm

$a_6 = 30^{o} \pm 1^{o}$

The force required to unlock the lid lock shall not exceed 0,25 N in the direction shown in figure 18.

The force required to open the lid shall not exceed 1,0 N in the direction shown in figure 19.

8.14 Cartridge reel lock (figure 10, 16 and 17)

The reels shall be locked when the cartridge is removed from the tape drive. This International Standard does not specify the design of the locking mechanism except that it shall be operated by a release pin in the drive.

The locking mechanism shall be accessed through a rectangular hole in the case (see figure 10) defined by the centreline from Plane Y

l_{82} = 34,5 mm ± 0,1 mm;

the top from Plane X

l_{83} = 35,85 mm ± 0,15 mm;

and

l_{84} = 4,0 mm ± 0,1 mm

l_{85} = 6,5 mm min.

© ISO/IEC 2001 – All rights reserved

Copyright International Organization for Standardization
Provided by IHS under license with ISO
No reproduction or networking permitted without license from IHS
Not for Resale

The dimension of the locking mechanism shall be defined by

$l_{86} = 3{,}2\ \text{mm}\ {}^{+\ 0{,}3\ \text{mm}}_{-\ 0{,}2\ \text{mm}}$

$l_{87} = 4{,}0\ \text{mm} \pm 0{,}1\ \text{mm}$

$a_7 = 60{,}0^{\text{o}} \pm 1{,}0^{\text{o}}$

The reels shall be locked when the operating face of the release pin is located at a distance from Plane X defined by

$l_{88} = 39{,}0\ \text{mm}\ {}^{+\ 2{,}0\ \text{mm}}_{-\ 0{,}0\ \text{mm}}$

The reels shall be unlocked when the operating face of the release pin is located at a distance from Plane X defined by

$l_{89} = 41{,}75\ \text{mm}\ {}^{+\ 0{,}50\ \text{mm}}_{-\ 0{,}00\ \text{mm}}$

In this position there shall be a clearance between the locking mechanism and the inside of the rear wall of the cartridge defined by

$l_{90} = 0{,}5$ mm min.

The pin used to move the locking mechanism shall penetrate the cartridge a distance of

$l_{91} = 7{,}8$ mm max.

The cavity of the locking mechanism shall be defined by

$l_{92} = 4{,}0\ \text{mm} \pm 0{,}1\ \text{mm}$

$r_4 = 0{,}3$ mm max.

The force required to unlock the reel lock in the direction shown in figure 17 shall not exceed 1,0 N.

8.15 Reel access holes (figure 10)

The case shall have two circular reel access holes that shall allow penetration of the drive spindles.

The positions of the access holes shall be defined by

$l_{93} = 23{,}00\ \text{mm} \pm 0{,}05\ \text{mm}$

$l_{94} = 11{,}40\ \text{mm} \pm 0{,}05\ \text{mm}$

$l_{95} = 46{,}2\ \text{mm} \pm 0{,}1\ \text{mm}$

The diameter of the holes shall be

$d_2 = 18{,}80\ \text{mm} \pm 0{,}05\ \text{mm}$

8.16 Interface between the reels and the drive spindles (figures 22 and 23)

The drive spindles shall engage the reels in the area defined by

$l_{102} = 5{,}4\ \text{mm} \pm 0{,}1\ \text{mm}$

$l_{103} = 4{,}4\ \text{mm} \pm 0{,}1\ \text{mm}$

$l_{104} = 0{,}6$ mm max.

$d_4 = 10{,}00\ \text{mm}\ {}^{+\ 0{,}08\ \text{mm}}_{-\ 0{,}00\ \text{mm}}$

$d_5 = 16{,}0$ mm max.

$d_6 = 18{,}0\ \text{mm}\ {}^{+\ 0{,}0\ \text{mm}}_{-\ 0{,}1\ \text{mm}}$

$d_7 = 16{,}0\ \text{mm}\ {}^{+\ 0{,}0\ \text{mm}}_{-\ 0{,}1\ \text{mm}}$

© ISO/IEC 2001 – All rights reserved
Copyright International Organization for Standardization
Provided by IHS under license with ISO
No reproduction or networking permitted without license from IHS
Not for Resale

The reel engagement hole shall have a chamfer defined by

$l_{105} = 2{,}4 \text{ mm} \pm 0{,}1 \text{ mm}$

$a_9 = 15^o \pm 1^o$

The bottom of the reel on the outside edge shall have a chamfer defined by

$l_{106} = 0{,}2 \text{ mm max.}$

$a_8 = 45^o \pm 1^o$

The position and width of the slots with which the drive spindle will engage shall be defined by

$l_{107} = 2{,}4 \text{ mm} \begin{matrix} +0{,}2 \text{ mm} \\ -0{,}0 \text{ mm} \end{matrix}$

$a_{10} = 60^o \pm 1^o$

The teeth in the reel engagement hole shall have a radius

$r_5 = 0{,}2 \text{ mm max.}$

The depth l_{108} of the reel driving hole shall be effective at diameter d_3

$l_{108} = 9{,}4 \text{ mm min.}$

$d_3 = 6{,}50 \text{ mm} \begin{matrix} +0{,}08 \text{ mm} \\ -0{,}00 \text{ mm} \end{matrix}$

When the tape is loaded in the drive, the tape centre line shall be in a plane parallel to Plane Z at a distance

$l_{109} = 7{,}05 \text{ mm} \pm 0{,}10 \text{ mm}$

and the Support areas of the reels shall be at a distance from Plane Z defined by

$l_{110} = 0{,}6 \text{ mm} \pm 0{,}2 \text{ mm}$

The penetration of the reel drive spindle into the reel shall be defined by

$l_{111} = 7{,}5 \text{ mm max.}$

$l_{112} = 8{,}0 \text{ mm max.}$

$a_{11} = 60° \pm 1°$

When the cartridge is mounted in the drive, so the Support areas are at a distance l_{110} from Plane Z, a force F = 0,6 N ± 0,2 N shall be exerted on the reel in the direction shown in figure 23.

8.17 Light path (figures 10, 12, 20 and 21)

A light path shall be provided for sensing the leader and trailer tapes. When the lid is open, an unobstructed light path shall exist from the d_{10} diameter light path hole to the outside of the cartridge via square windows in the light path hole (see cross-section D-D in figure 12) and the light window in the cartridge lid.

The centre of the light path hole shall be defined by l_{82} and

$l_{115} = 8{,}35 \text{ mm} \pm 0{,}10 \text{ mm}$

The diameter of the light path hole shall be

$d_{10} = 6{,}5 \text{ mm} \begin{matrix} +0{,}3 \text{ mm} \\ -0{,}0 \text{ mm} \end{matrix}$

The light path hole shall have a chamfer defined by

$l_{116} = 0{,}5 \text{ mm max.}$

$a_{12} = 45^o \pm 1^o$

© ISO/IEC 2001 – All rights reserved

Copyright International Organization for Standardization
Provided by IHS under license with ISO
No reproduction or networking permitted without license from IHS
Not for Resale

The position and size of the square window on each side of the light path hole shall be

l_{117} = 6,05 mm ± 0,10 mm

l_{118} = 2,5 mm $^{+\ 0,4\ \text{mm}}_{-\ 0,0\ \text{mm}}$

The hole shall be deep enough to allow penetration of a light emitter a distance of

l_{119} = 12,5 mm min.

The angle of the light path shall be

$a_{13} = 5{,}50^{o} \pm 0{,}25^{o}$

The position and size of the cartridge lid window shall be

l_{120} = 3,8 mm ± 0,1 mm

l_{121} = 2,5 mm $^{+\ 0,4\ \text{mm}}_{-\ 0,0\ \text{mm}}$

l_{122} = 6,05 mm ± 0,10 mm

8.18 Position of the tape in the case (figure 21)

The tape shall run between two guide surfaces in a plane parallel to Plane X and l_{123} from it.

l_{123} = 13,15 mm ± 0,10 mm

The guide surfaces shall have a radius of r_6 and shall be tangential, as shown in figure 21, to lines tangential to the reel hubs that extend to points outside the case.

r_6 = 3,0 mm ± 0,1 mm

These points shall be defined by

l_{124} = 76,28 mm ± 0,30 mm

l_{125} = 27,25 mm ± 0,20 mm

l_{126} = 31,15 mm ± 0,20 mm

l_{127} = 9,67 mm ± 0,10 mm

8.19 Tape path zone (figure 21)

When the cartridge is inserted into the drive, the tape is pulled outside the case by tape guides and is no longer in contact with the guide surfaces. The tape path zone (see figure 21) of the case is the zone in which the tape shall be able to move freely. This zone shall be maintained for both sides of the case and shall be defined by l_{124} to l_{127} and

l_{128} = 23,0 mm ± 0,1 mm

l_{130} = 46,2 mm ± 0,2 mm

l_{131} = 11,4 mm ± 0,1 mm

The clearance between the tape and the guides shall be defined by

l_{129} = 0,3 mm min.

l_{132} = 0,3 mm min.

© ISO/IEC 2001 – All rights reserved
Copyright International Organization for Standardization
Provided by IHS under license with ISO
No reproduction or networking permitted without license from IHS
Not for Resale

8.20 Tape access cavity (figure 10)

When the cartridge is inserted into the drive, tape guides in the drive pull the tape into the drive tape path. The two radii r_7 are centred on Datum holes A and B. The shape and dimensions of the access cavity for these tape guides shall be defined by l_{63} and l_{64}, and the following

$r_7 = 2{,}3 \text{ mm} \pm 0{,}1 \text{ mm}$

The two radii r_8 are centred on the centres of the reel access holes.

$r_8 = 24{,}15 \text{ mm} \pm 0{,}10 \text{ mm}$

$l_{133} = 3{,}85 \text{ mm} \pm 0{,}10 \text{ mm}$

8.21 Tape access cavity clearance requirements (figure 24)

The case design shall provide clearance for drive tape threading mechanisms and shall be defined by

$l_{134} = 1{,}2 \text{ mm max.}$

$l_{135} = 1{,}15 \text{ mm}^{+0{,}20 \text{ mm}}_{-0{,}00 \text{ mm}}$

$l_{136} = 14{,}0 \text{ mm}^{+0{,}0 \text{ mm}}_{-0{,}2 \text{ mm}}$

$l_{137} = 66{,}8 \text{ mm min.}$

$l_{138} = 10{,}0 \text{ mm min.}$

$l_{139} = 66{,}8 \text{ mm min.}$

$a_{14} = 49^{o} \text{ max.}$

$l_{140} = 1{,}2 \text{ mm max.}$

$l_{141} = 14{,}8 \text{ mm min.}$

$l_{113} = 13{,}0 \text{ mm min.}$

$l_{114} = 4{,}0 \text{ mm max.}$

© ISO/IEC 2001 – All rights reserved

Copyright International Organization for Standardization
Provided by IHS under license with ISO
No reproduction or networking permitted without license from IHS
Not for Resale

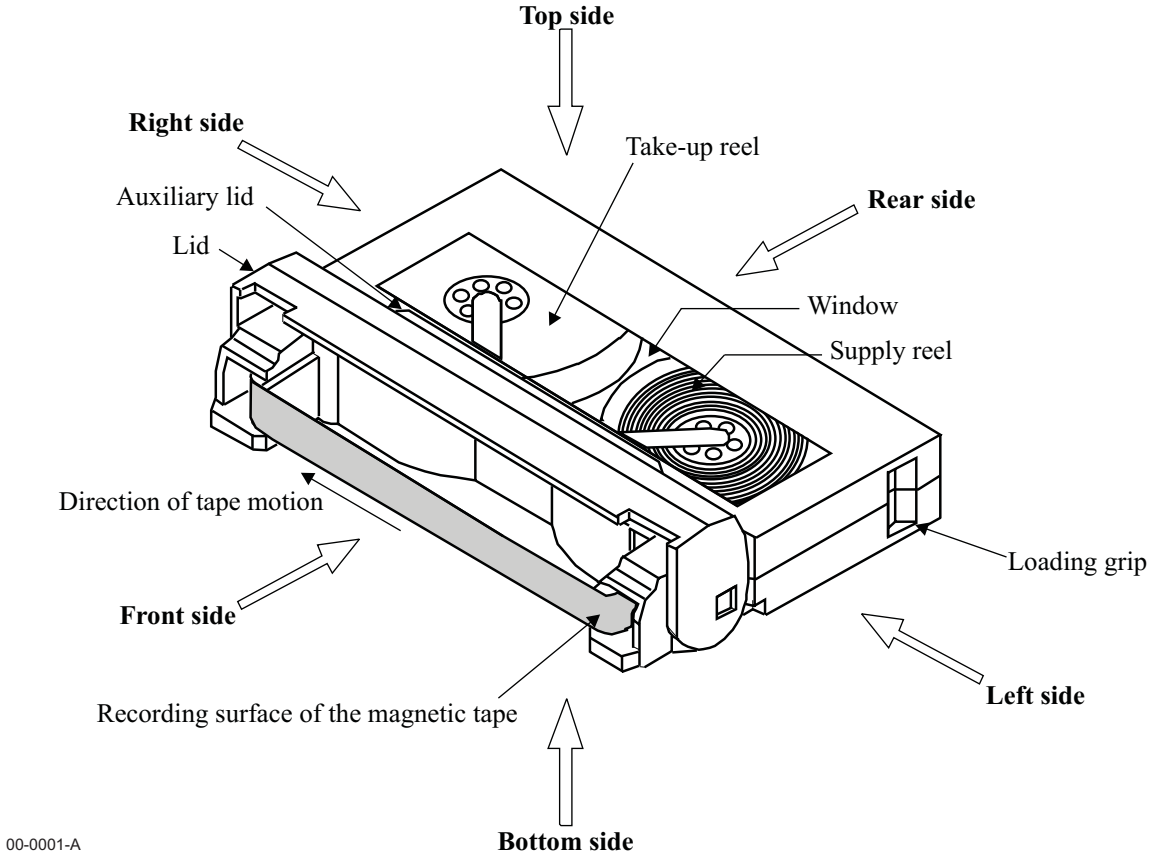

Figure 1 - Tape cartridge assembly top view, lid opened

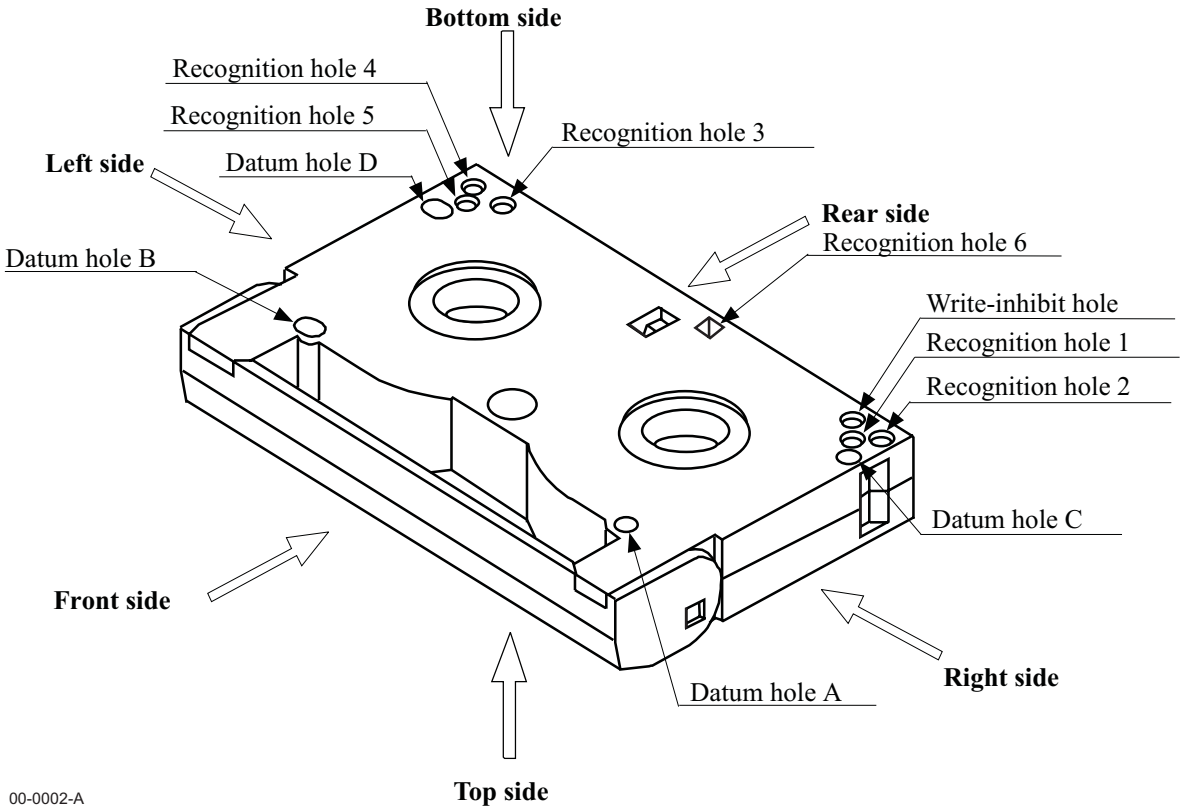

Figure 2 - Tape cartridge assembly bottom view, lid closed

© ISO/IEC 2001 – All rights reserved
Copyright International Organization for Standardization
Provided by IHS under license with ISO
No reproduction or networking permitted without license from IHS
Not for Resale

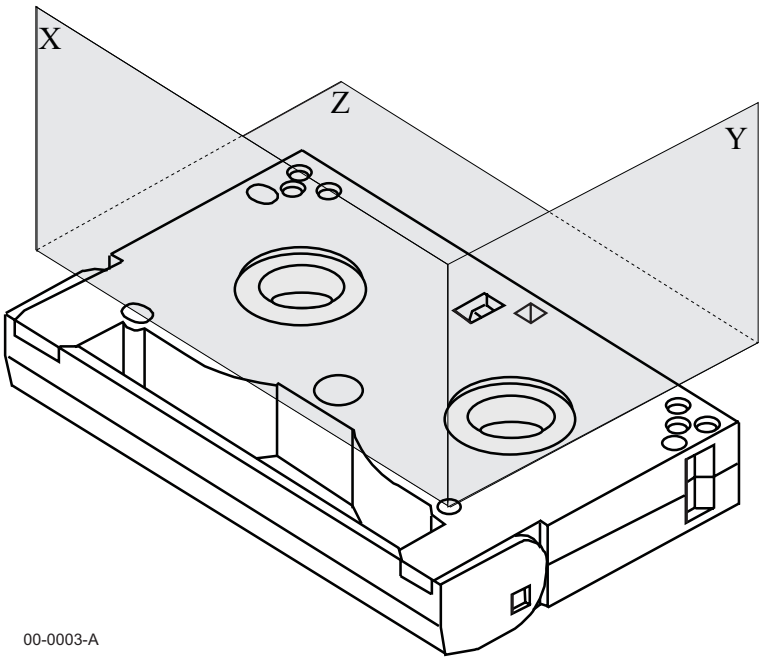

Figure 3 - Reference Planes X, Y, and Z

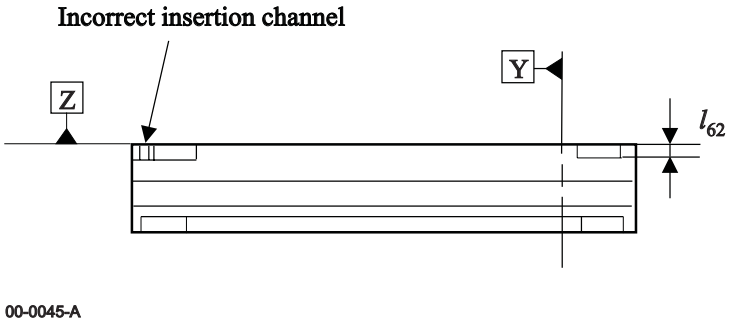

Figure 4 - Front side, lid closed

© ISO/IEC 2001 – All rights reserved

Copyright International Organization for Standardization
Provided by IHS under license with ISO
No reproduction or networking permitted without license from IHS
Not for Resale

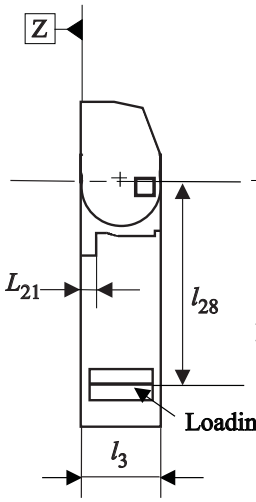

Figure 5 - Left side, lid closed

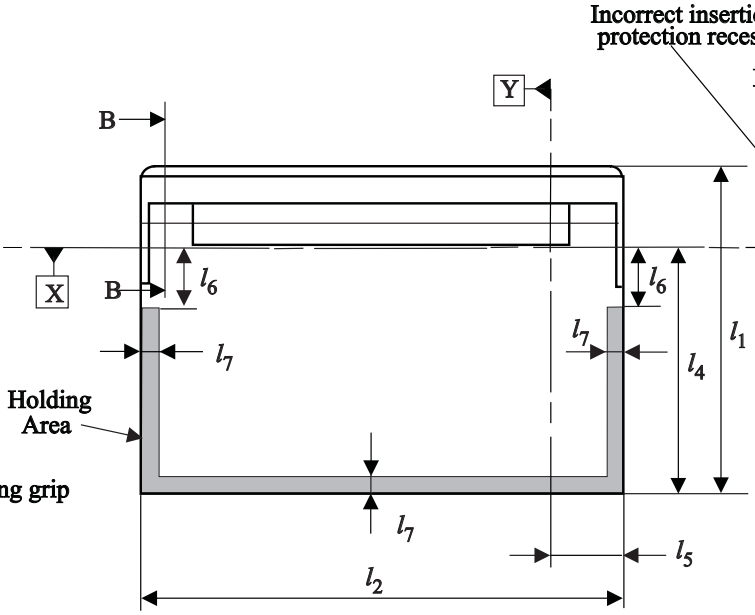

Figure 6 - Top side, lid closed

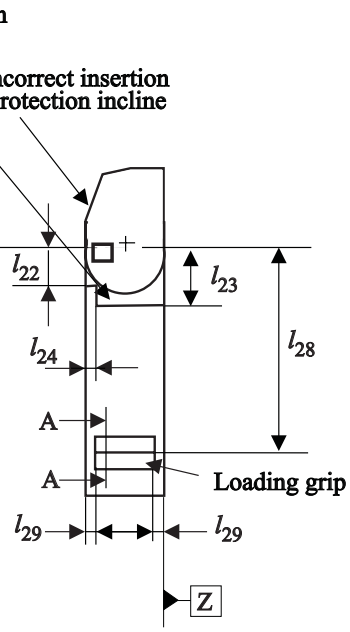

Figure 7 - Right side, lid closed

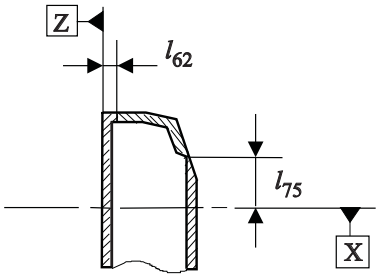

Section B-B

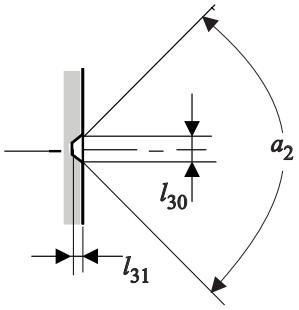

Section A-A

00-0046-A

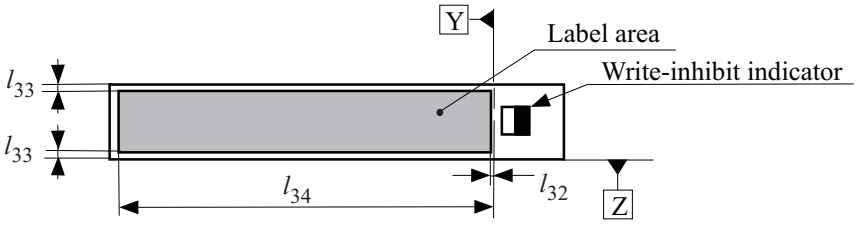

00-0005-A

Figure 8 - Rear side, lid closed

© ISO/IEC 2001 – All rights reserved
Copyright International Organization for Standardization
Provided by IHS under license with ISO
No reproduction or networking permitted without license from IHS
Not for Resale

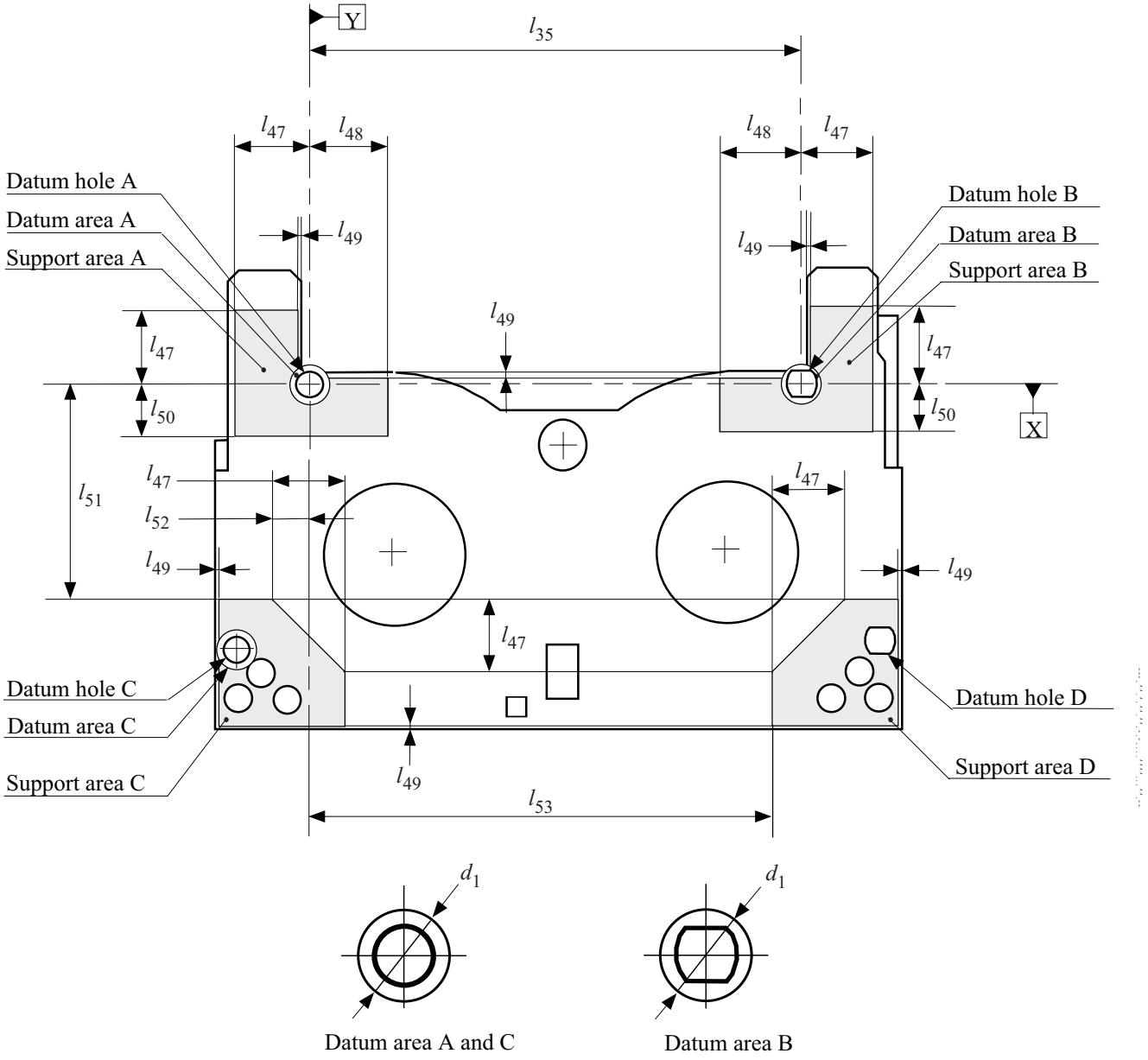

Figure 9 - Bottom side, Datum and Support areas

© ISO/IEC 2001 – All rights reserved

Copyright International Organization for Standardization
Provided by IHS under license with ISO
No reproduction or networking permitted without license from IHS
Not for Resale

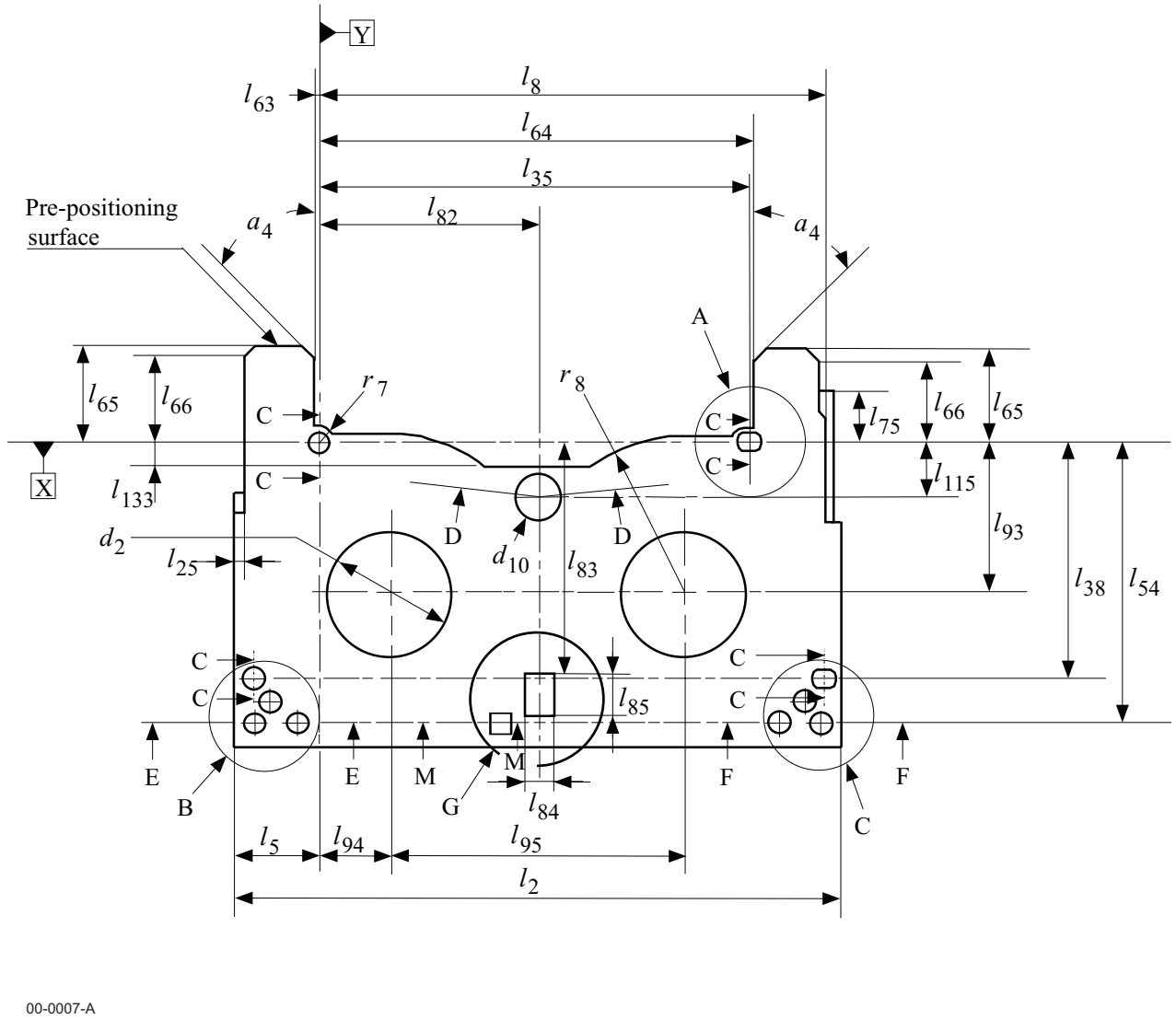

00-0007-A

Figure 10 - Bottom side, lid removed

© ISO/IEC 2001 – All rights reserved
Copyright International Organization for Standardization
Provided by IHS under license with ISO
No reproduction or networking permitted without license from IHS
Not for Resale

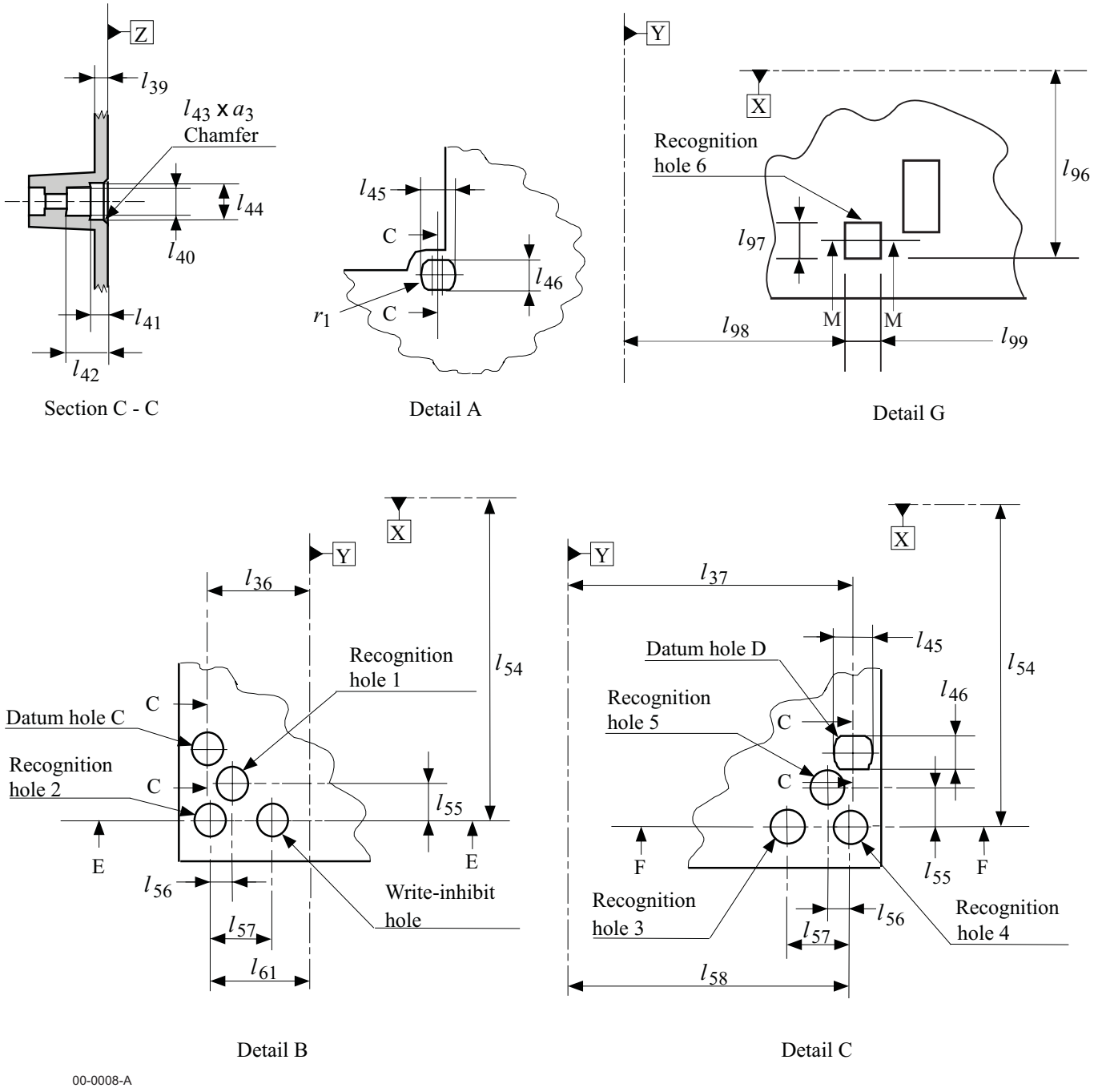

Figure 11 - Details of datum and recognition holes

© ISO/IEC 2001 - All rights reserved
Copyright International Organization for Standardization
Provided by IHS under license with ISO
No reproduction or networking permitted without license from IHS
Not for Resale

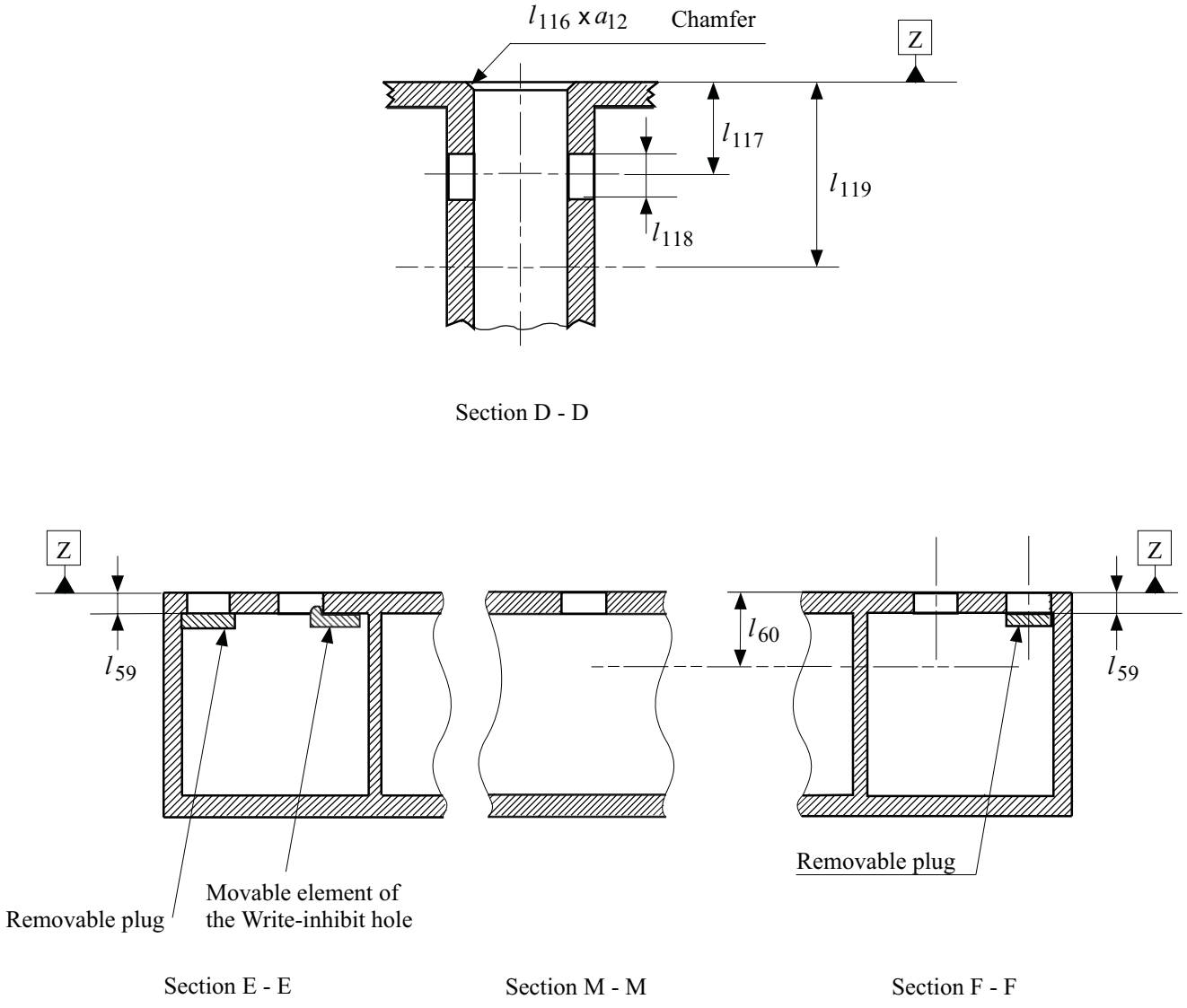

Figure 12 - Cross-sections of light path holes, recognition holes and write-inhibit hole

© ISO/IEC 2001 – All rights reserved
Copyright International Organization for Standardization
Provided by IHS under license with ISO
No reproduction or networking permitted without license from IHS
Not for Resale

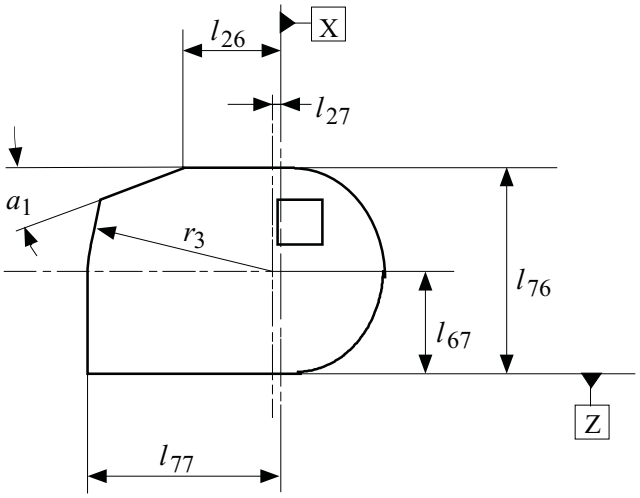

Details of the side of the lid

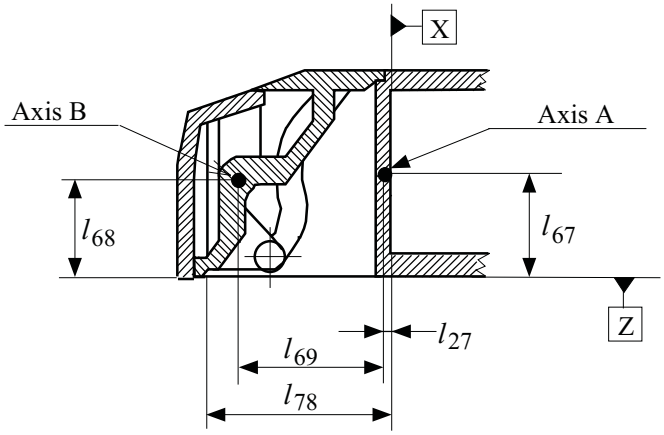

Internal lid structure

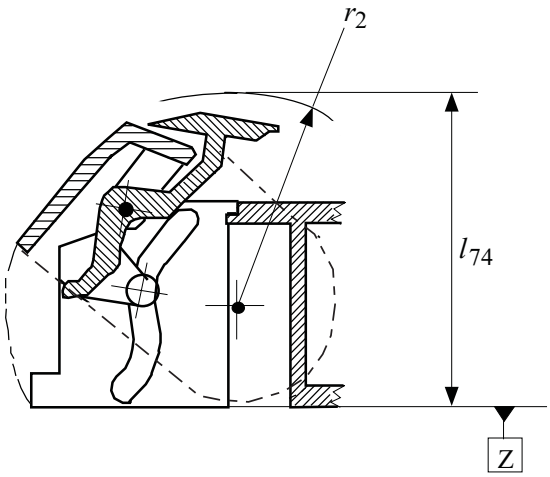

Lid configuration
when rotating

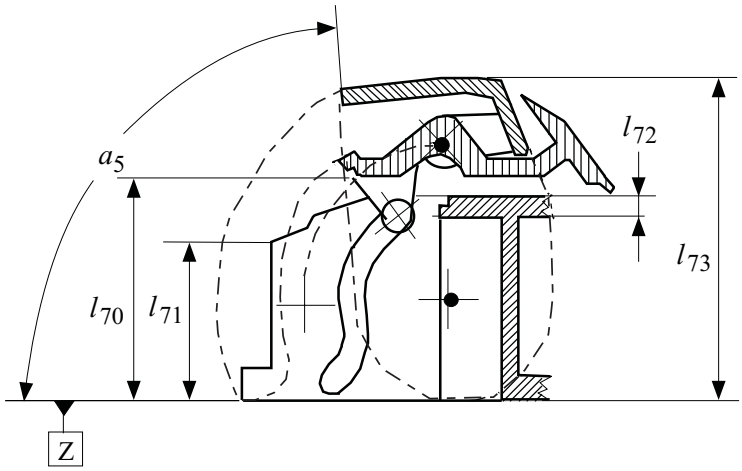

Lid configuration
when the lid is open

00-0010-A

Figure 13 - Lid

© ISO/IEC 2001 - All rights reserved

Copyright International Organization for Standardization
Provided by IHS under license with ISO
No reproduction or networking permitted without license from IHS
Not for Resale

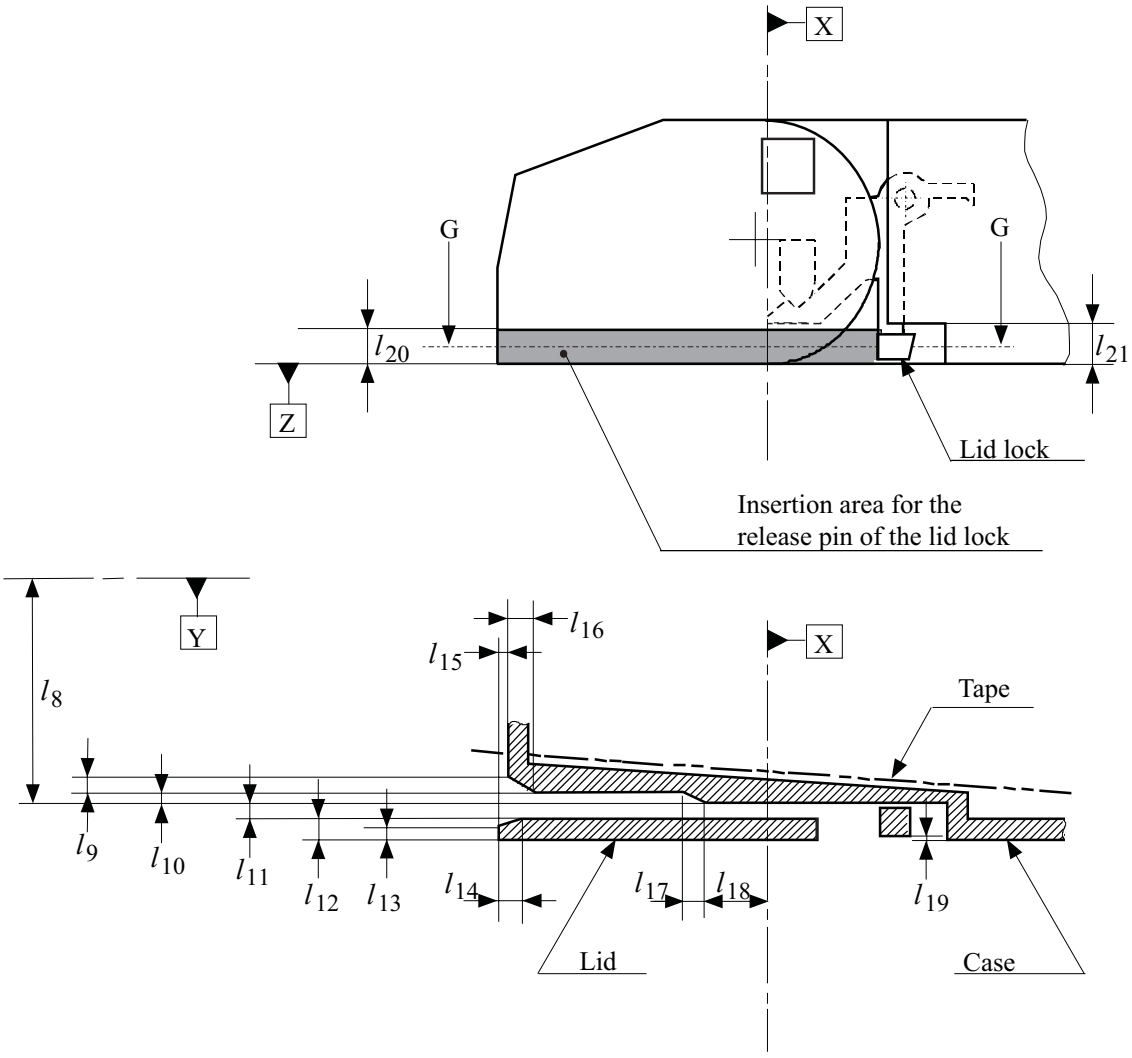

Section G - G

96-0219-A

Figure 14 - Lid release insertion channel

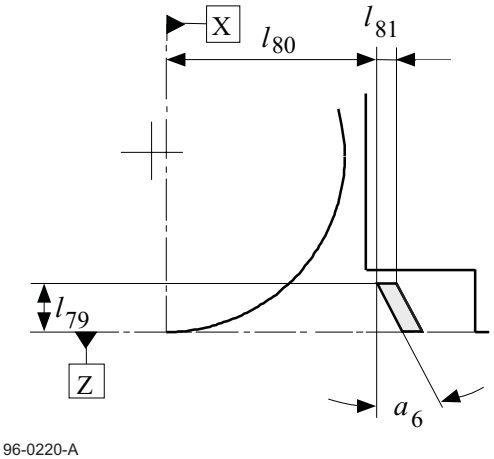

96-0220-A

Figure 15 - Lid release requirement

© ISO/IEC 2001 – All rights reserved
Copyright International Organization for Standardization
Provided by IHS under license with ISO
No reproduction or networking permitted without license from IHS
Not for Resale

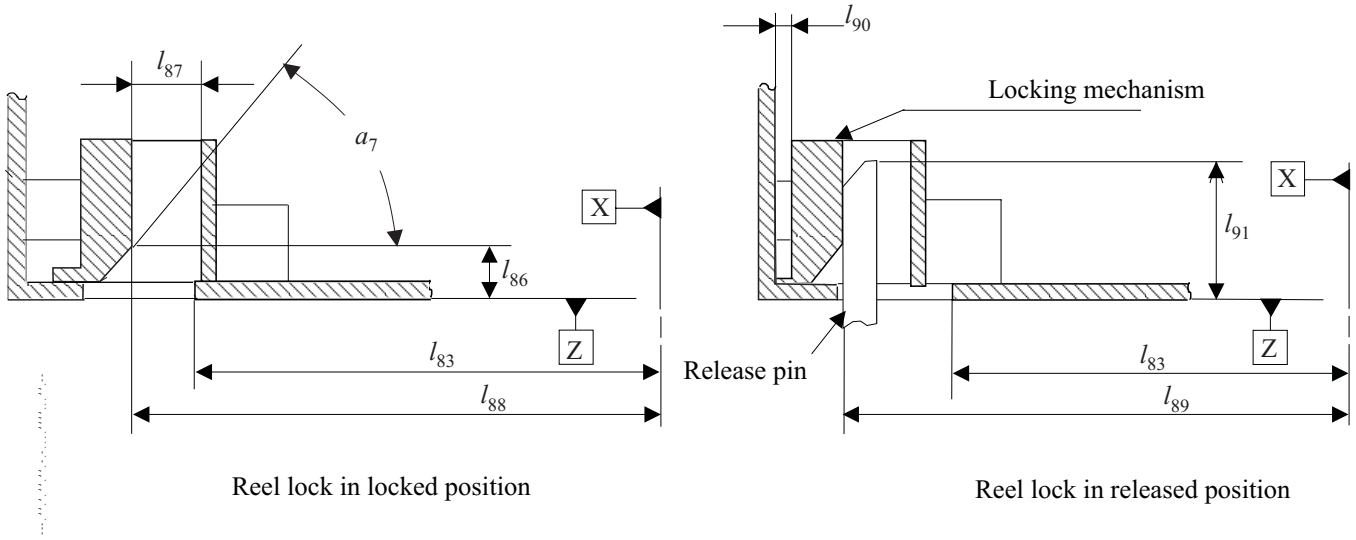

Reel lock in locked position

Reel lock in released position

Section L-L of figure 21

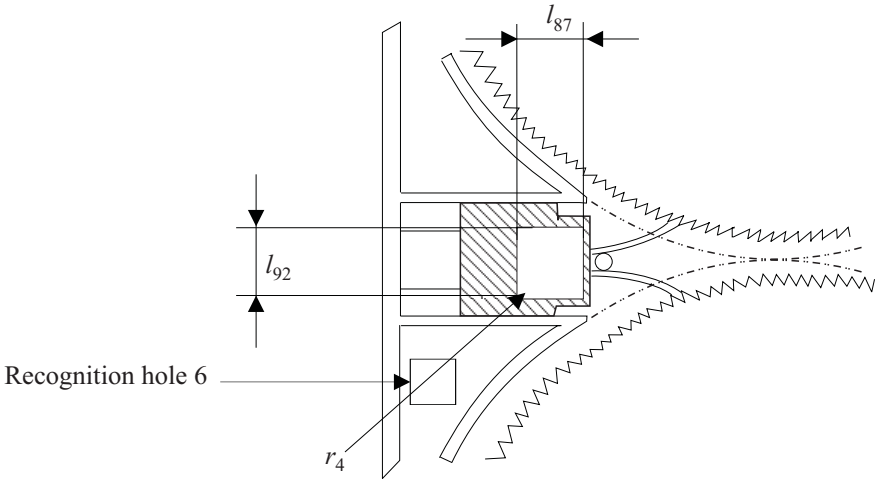

Detail E
of figure 21

00-0011-A

Figure 16 - Reel lock and release

© ISO/IEC 2001 – All rights reserved

Copyright International Organization for Standardization
Provided by IHS under license with ISO
No reproduction or networking permitted without license from IHS
Not for Resale

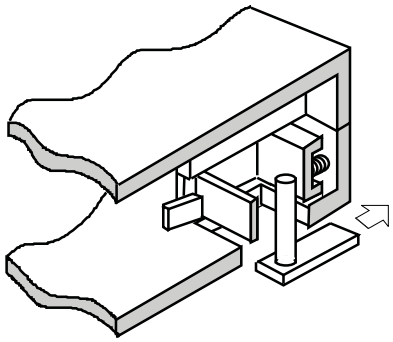

96-0222-A

Figure 17 - Direction of force needed to unlock the reel lock

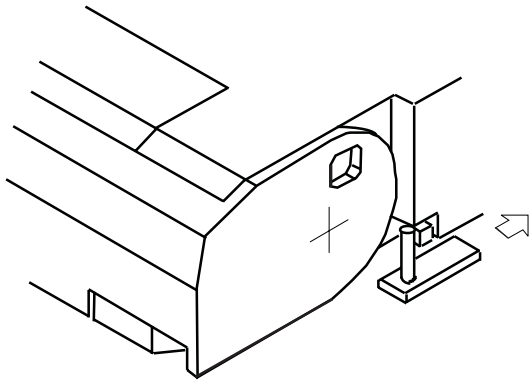

96-0223-A

Figure 18 - Direction of force needed to unlock the lid lock

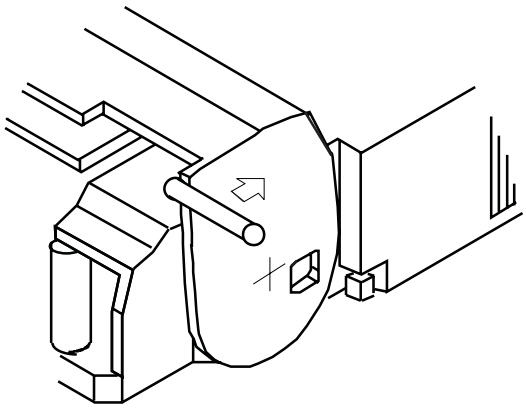

96-0224-A

Figure 19 - Direction of force needed to open the lid

© ISO/IEC 2001 – All rights reserved
Copyright International Organization for Standardization
Provided by IHS under license with ISO
No reproduction or networking permitted without license from IHS
Not for Resale

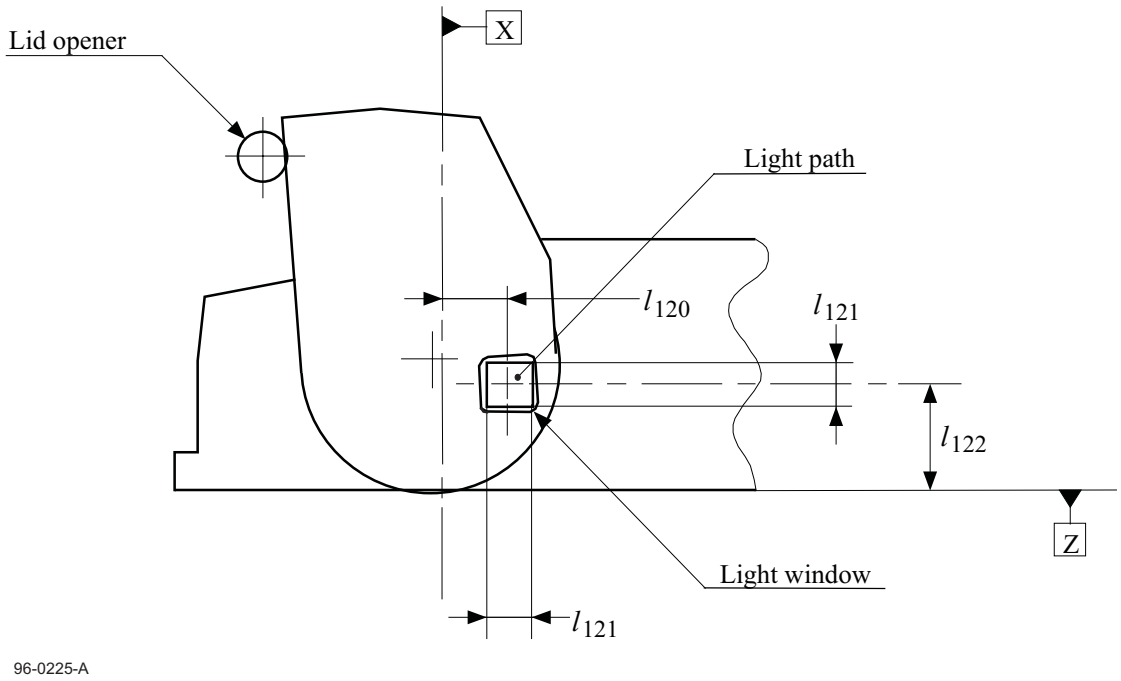

Figure 20 - Light path and light window

© ISO/IEC 2001 – All rights reserved

Copyright International Organization for Standardization
Provided by IHS under license with ISO
No reproduction or networking permitted without license from IHS
Not for Resale

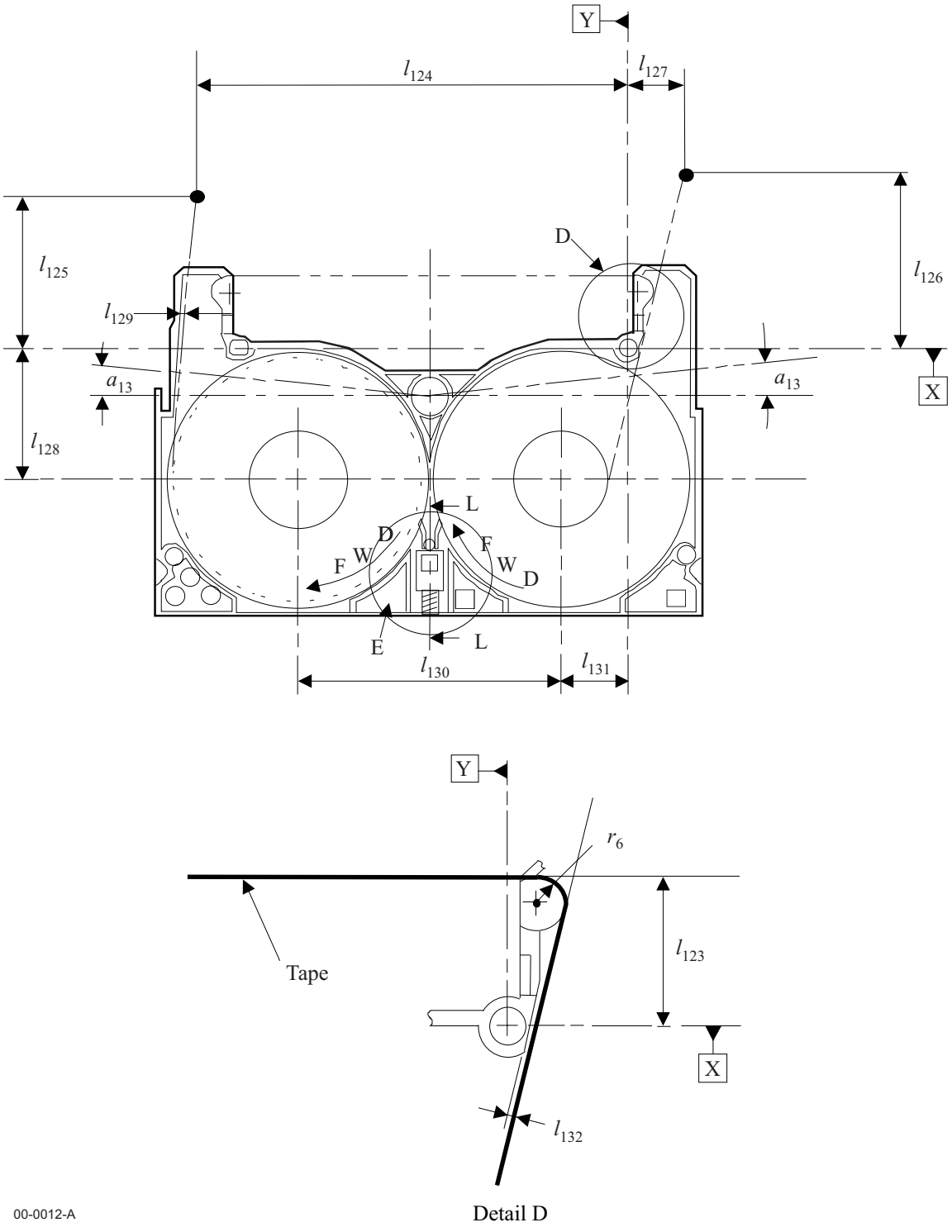

Figure 21 - Internal tape path and light path

© ISO/IEC 2001 – All rights reserved
Copyright International Organization for Standardization
Provided by IHS under license with ISO
No reproduction or networking permitted without license from IHS
Not for Resale

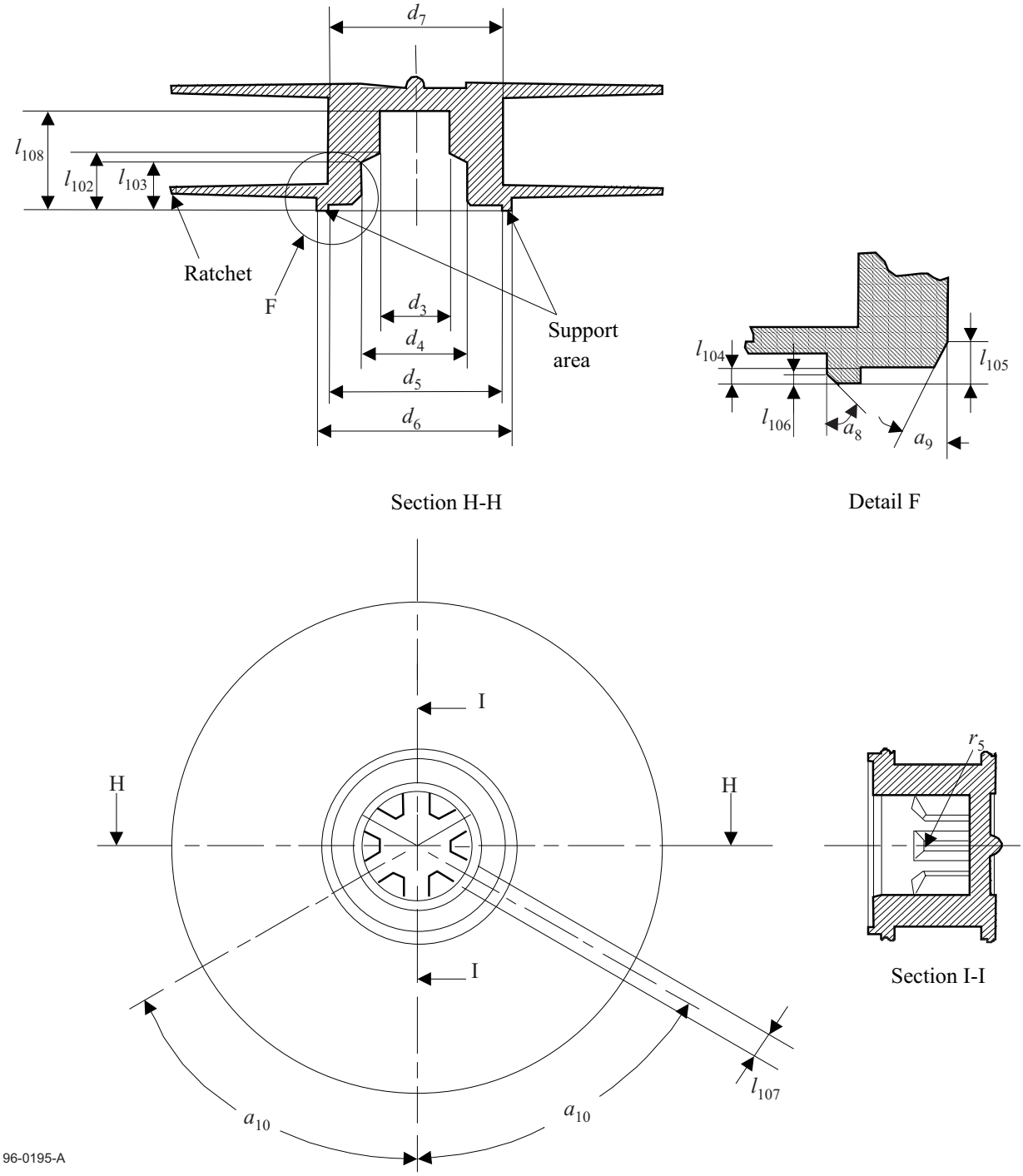

Figure 22 - Cartridge reel

© ISO/IEC 2001 – All rights reserved
Copyright International Organization for Standardization
Provided by IHS under license with ISO
No reproduction or networking permitted without license from IHS
Not for Resale

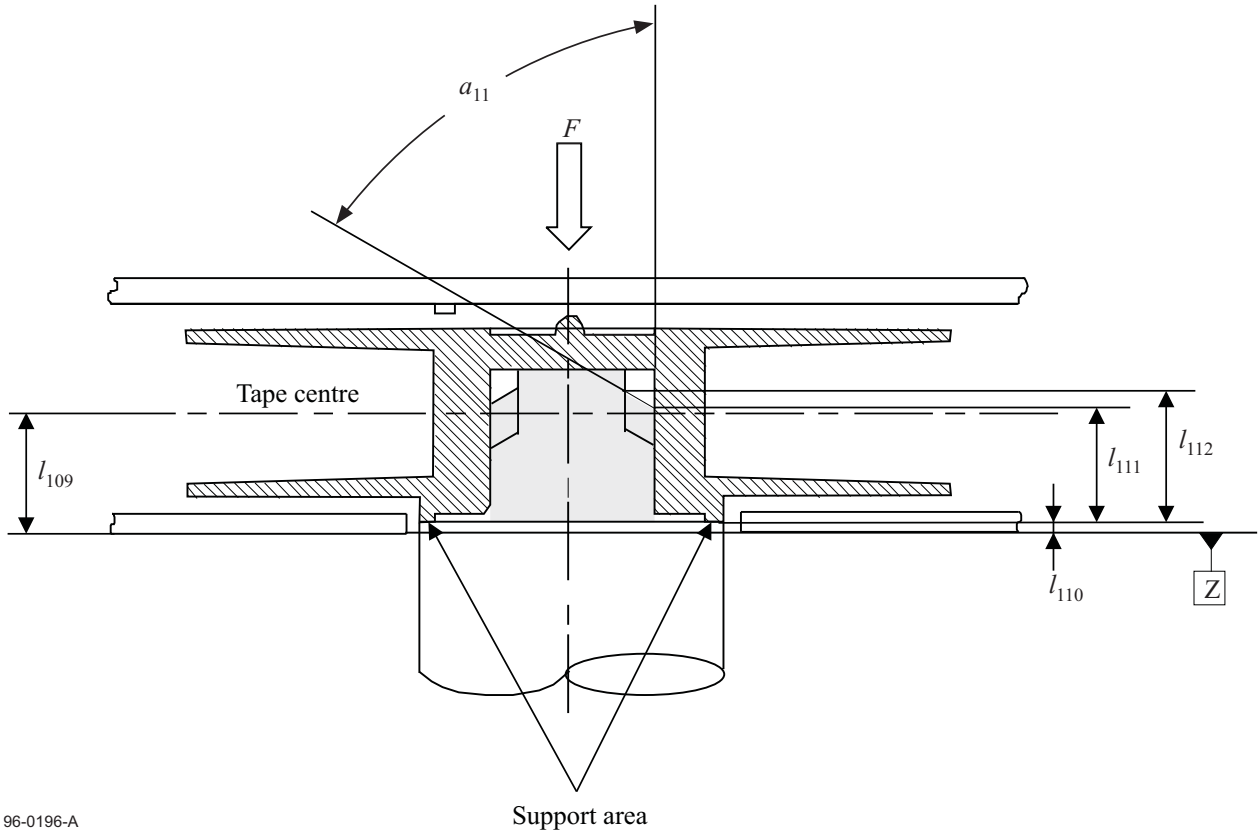

Figure 23 - Interface with drive spindle

--`,,```,,,,````-`-`,,`,,`,`,,`---
Copyright International Organization for Standardization
Provided by IHS under license with ISO
No reproduction or networking permitted without license from IHS
Not for Resale
© ISO/IEC 2001 – All rights reserved

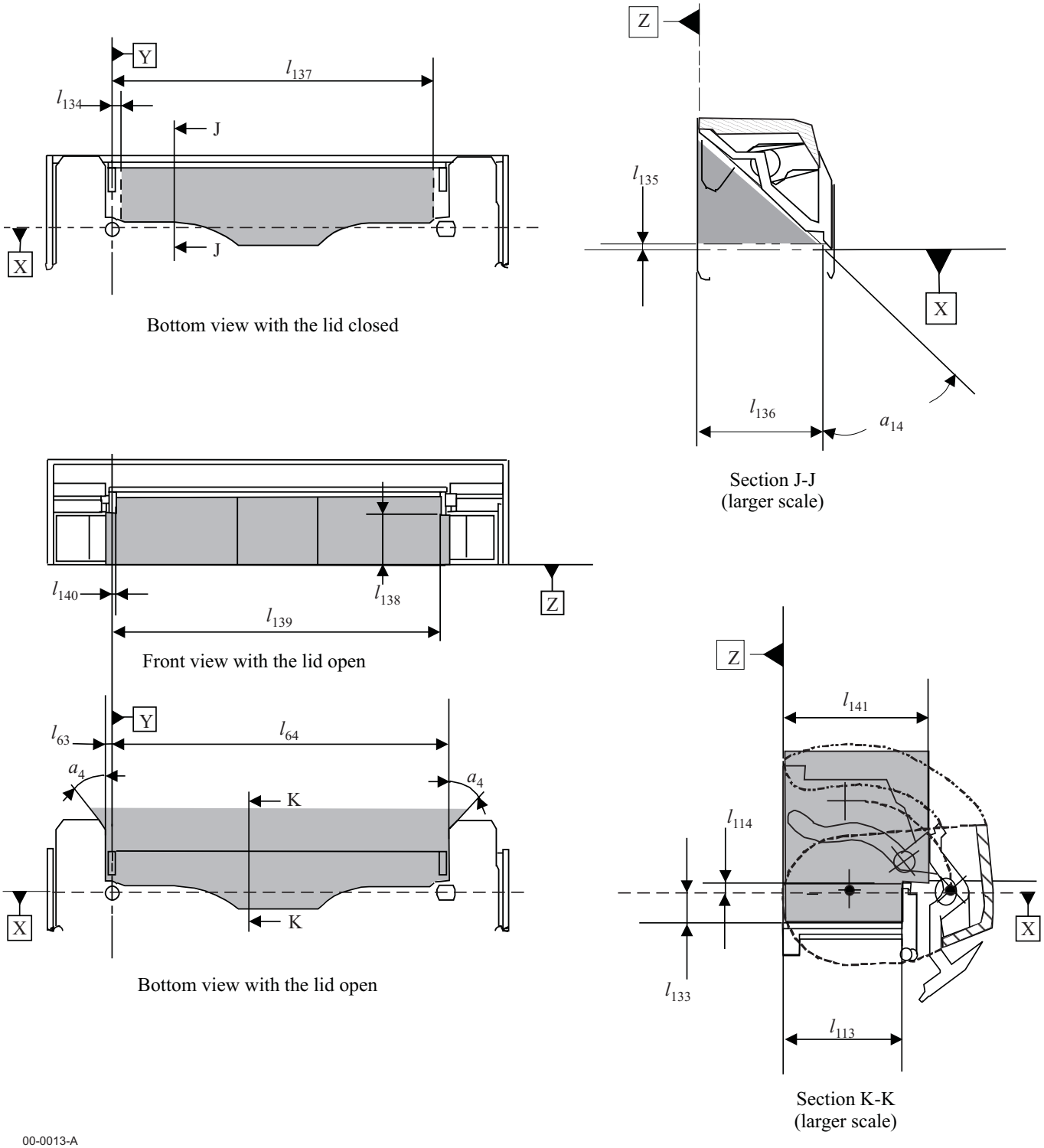

Figure 24 - Tape access cavity clearance

© ISO/IEC 2001 - All rights reserved

Copyright International Organization for Standardization
Provided by IHS under license with ISO
No reproduction or networking permitted without license from IHS
Not for Resale

Section 3 - Requirements for the Unrecorded Tape

9 Mechanical, physical and dimensional characteristics of the tape

9.1 Materials

The tape contained within the case shall consist of a leader tape, magnetic tape and trailer tape as shown in figure 25.

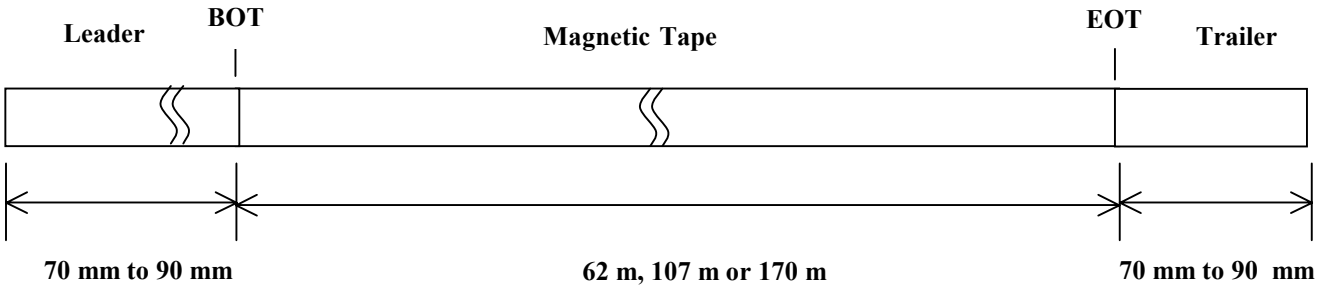

Figure 25 – Tape configuration

The base material of the recordable area of the tape shall be an oriented polyethylene terephthalate film (or equivalent) coated on one side with a strong yet flexible ferromagnetic layer of evaporated metal material (or equivalent). The back surface may be coated.

There shall be a leader tape between the take-up hub and BOT. There shall be a trailer tape between EOT and the supply hub. The leader and trailer tapes shall consist of a translucent length of the same base material (or equivalent) without the ferromagnetic coating or the back coating.

The leader and trailer tapes shall each be attached to the magnetic tape by means of a splicing tape that extends over each such joint. The splicing tape shall consist of polyethylene terephthalate (or equivalent) coated on one side with an acrylic (or equivalent) adhesive material

9.2 Length

9.2.1 Length of the magnetic tape

When measured between BOT and EOT, the length of the magnetic tape shall be

Type A: In the range 169,5 m to 171,0 m
Type B: In the range 107,0 m to 108,5 m

Type C: In the range 62,0 m to 63,5 m

9.2.2 Length of leader and trailer tapes

The length of the leader and trailer tapes shall be in the range 70 mm to 90 mm. The joints between the leader and trailer tapes and the magnetic tape shall be perpendicular to the Tape Reference Edge within 10°.

9.2.3 Length of the splicing tape

The splicing tape shall have a length of 13 mm max. It shall extend for a distance of 6,5 mm ± 1,5 mm over the leader and trailer tapes.

9.3 Width

9.3.1 Width of magnetic, leader and trailer tape

The width of the magnetic tape shall be 8,00 mm ± 0,01 mm. The difference between the largest and smallest width shall not exceed 6 µm.

The width of the leader tape and trailer tape shall be 8,00 mm ± 0,02 mm.

Procedure

1. Cover a section of the tape with a glass microscope slide.
2. Measure the width across the tape from edge to edge with no tension applied to the tape using a calibrated microscope, profile projector, or equivalent having an accuracy of at least 2,5 µm.

© ISO/IEC 2001 – All rights reserved
Copyright International Organization for Standardization
Provided by IHS under license with ISO
No reproduction or networking permitted without license from IHS
Not for Resale

3. Repeat the measurement to obtain tape widths at a minimum of five equally spaced positions along a magnetic tape length of 1,0 m min., or 5 equally spaced positions along the leader or trailer tape.

The tape width is the average of the widths measured.

9.3.2 Width and position of the splicing tape

The width of the splicing tape and its position across the width of the leader, trailer and magnetic tapes shall be such that the bottom edge of the splicing tape shall be no more than 0,60 mm above the bottom edges of the other tapes and the top edge of the splicing tape shall be no more than 0,60 mm below their top edges. Neither edge of the splicing tape shall extend beyond the edges of the leader, trailer and magnetic tapes.

9.3.3 Edge weave

The edge weave is the mean deviation of the Tape Reference Edge from the mean edge position that is calculated over a sample length of 50 mm. The edge weave shall not exceed 6 µm.

Procedure

1. Place a 450 mm sample under a tension of 0,050 N ± 0,005 N.
2. Using a calibrated edge position sensor (see figure 26), with an accuracy of 0,5 µm or better, take 1001 measurements at 0,25 mm intervals along 250 mm of the Tape Reference Edge of the sample.
3. Using measurements 1 to 201, calculate the mean Tape Reference Edge position for that 50 mm interval using linear regression analysis (see figure 27).
4. Determine the maximum deviation from the mean Tape Reference Edge within these 201 measurements (see figure 27).
5. Repeat steps 3 and 4 for the next set of measurements 2 to 202, and successively for all sets from 3 to 203 up to 800 to 1001.
6. The edge weave is the average value of the 800 maximum deviations found over the 800 measurement sets.

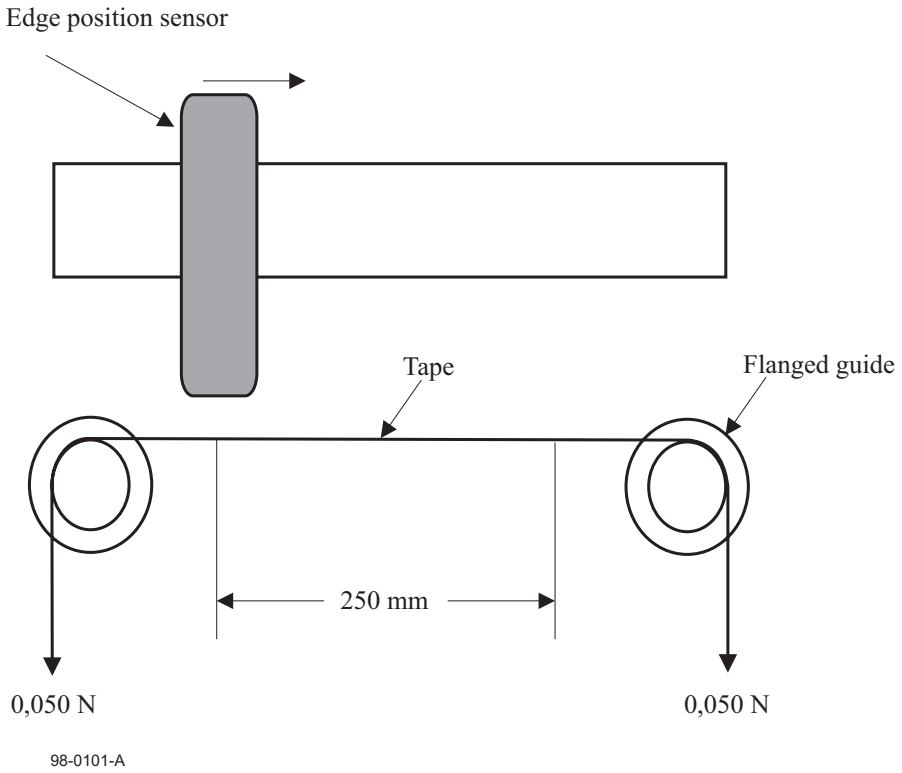

Figure 26 - Measurement of edge weave

© ISO/IEC 2001 – All rights reserved

Copyright International Organization for Standardization
Provided by IHS under license with ISO
No reproduction or networking permitted without license from IHS
Not for Resale

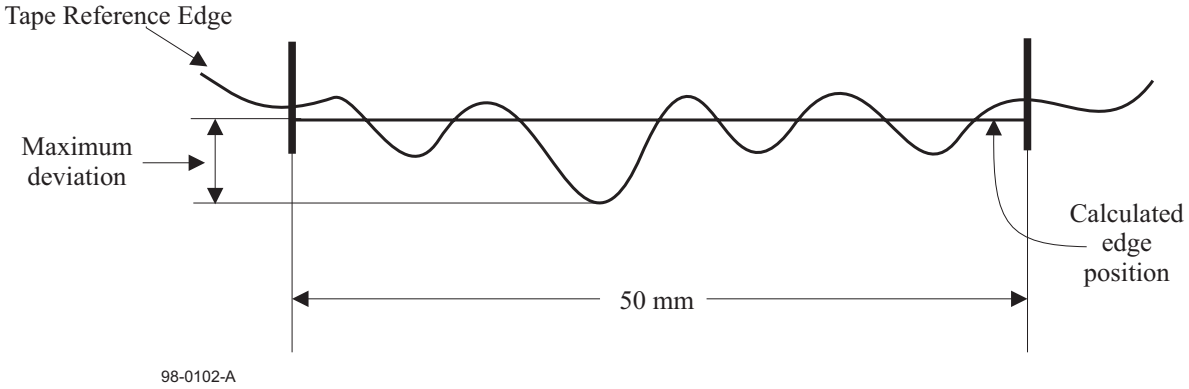

Figure 27 - Edge weave

9.4 Discontinuities

There shall be no discontinuities in the tape between BOT and EOT, such as those produced by tape splicing or perforations.

9.5 Thickness

9.5.1 Thickness of the magnetic tape

The thickness of the magnetic tape at any point shall be between 6,5 µm and 7,3 µm.

9.5.2 Thickness of leader and trailer tape

The thickness of the leader and trailer tape at any point shall be between 9 µm and 17 µm.

9.5.3 Thickness of the splice tape

The thickness of the splice tape at any point shall be 20 µm max.

9.6 Longitudinal curvature

The radius of curvature of the edge of the tape shall not be less than 33 m.

Procedure

1. Allow a 1,0 m length of tape to unroll and assume its natural curvature on a flat smooth surface.
2. Measure the deviation from a 1,0 m chord.
3. The deviation shall not be greater than 3,8 mm.

This deviation corresponds to the minimum radius of curvature of 33 m if measured over an arc of a circle.

9.7 Cupping

The departure of the tape from a plane established by the edges of the tape shall not exceed 0,7 mm.

Procedure

1. Cut a 150 mm ± 10 mm length of tape.
2. Condition it for a minimum of 3 h in the test environment by hanging it so that the coated surface is freely exposed to the test environment.
3. Lay the tape across two cylindrical guides that are placed horizontally with the centres 35 mm apart.
4. Attach a 0,3 g weight to each end of the tape.
5. Measure the distance between the plane established by the edges of the tape and the maximum deviation from the plane.

9.8 Coating adhesion

The force required to peel any part of the coating from the tape base material shall not be less than 0,10 N.

© ISO/IEC 2001 – All rights reserved
Copyright International Organization for Standardization
Provided by IHS under license with ISO
No reproduction or networking permitted without license from IHS
Not for Resale

Procedure

1. Take a test piece of the tape approximately 380 mm long and scribe a line through the coating across the width of the tape 125 mm from one end.
2. Using a double-sided pressure sensitive tape, attach the test piece to a smooth metal plate, with the coated surface facing the plate, as shown in figure 28.
3. Fold the test piece over 180º adjacent to and parallel with the scribed line. Attach the metal plate and the free end of the test piece to the jaws of a universal testing machine such that when the jaws are separated the tape is peeled. Set the jaw separation rate to 254 mm/minute.
4. Note the force at which any part of the coating first separates from the base material. If this is less than 0,10 N, the tape has failed the test. If the test piece peels away from the double-sided pressure sensitive tape before the force exceeds 0,10 N, an alternative type of double-sided pressure tape shall be used.

If the back surface of the tape is coated, repeat the procedure for the back coating.

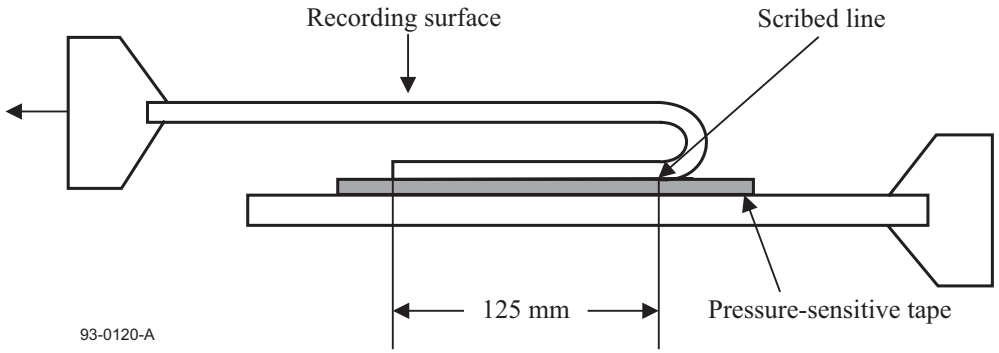

Figure 28 - Measurement of the coating adhesion

9.9 Layer-to-layer adhesion

There shall be no tendency for the test piece to stick or the coating to peel.

Procedure

1. Attach one end of a test piece of magnetic tape of 1,0 m in length to the surface of a glass tube of 36 mm in diameter.
2. Wind the tape onto the tube at a tension of 1,1 N.
3. Store the wound test piece in a temperature of 45 °C ± 3 °C and a relative humidity of 80 % for 4 h.
4. Store for a further 24 h in the testing environment.
5. Apply a force of 0,1 N to the free end of the test piece and allow it to unwind slowly.

9.10 Tensile strength

Measurements shall be made in accordance with ISO 527-3. The length of the test piece shall be 200 mm. The length of the leader tape test piece shall be 50 mm. The length of the trailer tape test piece shall be 50 mm. The rate of elongation for all tensile tests shall be 100 mm/minute.

9.10.1 Breaking strength

Load the test piece until the breaking point of the test piece is reached. The force required to reach that point is the breaking strength of the tape.

The breaking strength shall be 8 N min.

9.10.2 Yield strength

The yield strength is the force necessary to produce a 5 % elongation of the tape.

The yield strength shall be 4 N min.

© ISO/IEC 2001 – All rights reserved

Copyright International Organization for Standardization
Provided by IHS under license with ISO
No reproduction or networking permitted without license from IHS
Not for Resale

9.11 Residual elongation

The residual elongation, stated in per cent of the original tape length, shall be less than 0,04 %.

Procedure

1. Measure the initial length of a test piece of 1,0 m with a maximum applied force of 0,20 N.
2. Apply an additional force per total cross-sectional area of 20,5 N/mm^2 for a period of 10 minutes.
3. Remove the additional force and measure the length after ten minutes.

9.12 Electrical resistance of the recording surface

The electrical resistance of any square area of the recording surface shall be 10^3 Ω max.

Procedure

1. Condition a test piece of tape in the test environment for 24 h.
2. Position the test piece over two 24-carat gold-plated, semicircular electrodes having a radius r = 10 mm and a finish of at least N4, so that the recording surface is in contact with each electrode. These electrodes shall be placed parallel to the ground and parallel to each other at a distance d = 8 mm between their centres. See figure 29.
3. Apply the force necessary to produce a tension of 5 N/mm^2 to each end of the test piece.
4. Apply a dc voltage of 7 V ± 1 V across the electrodes and measure the resulting current flow. From this value, determine the electrical resistance.

Repeat for a total of five positions along the test piece and average the five resistance readings.

When mounting the test piece, ensure that no conducting paths exist between the electrodes except that through the coating under test.

Note - Particular attention should be given to keeping the surfaces clean.

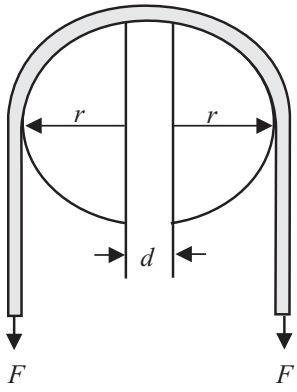

Figure 29 - Measurement of electrical resistance

9.13 Tape winding

The magnetic recording surface of the tape shall face outward from the cartridge and reels.

9.14 Light transmittance of tape

The light transmittance of the magnetic tape shall be 5 % max.

The light transmittance of the leader and trailer tapes shall be 60 % min.

The method for measuring light transmittance is given in annex A.

10 Magnetic recording characteristics

The magnetic recording characteristics shall be defined by the testing requirements given below.

© ISO/IEC 2001 – All rights reserved
Copyright International Organization for Standardization
Provided by IHS under license with ISO
No reproduction or networking permitted without license from IHS
Not for Resale

When performing these tests, the output or resultant signal shall be measured on a read-while-write pass for both a tape calibrated to the Master Standard Reference Tape and the tape under test, on the same equipment.

10.1 Test conditions

The following conditions shall apply to the testing of all magnetic recording characteristics in clause 10, unless otherwise stated.

tape condition:	ac erased to -40 dB or less of the Average Signal Amplitude recorded at 2 740 ftpmm
head/tape speed:	10,683 7 m/s ± 0,003 0 m/s
tape tension	0,10 N ± 0,02 N measured at the input scanner
track width:	15,0 μm ± 1,5 μm
write gap length:	0,25 μm ± 0,03 μm
read gap length:	0,25 μm ± 0,03 μm
gap azimuth:	$20{,}00^{o} \pm 0{,}16^{o}$
recording current:	Test Recording Current
recording waveform:	square wave
read head setting during a read pass:	The read head shall cover the whole width of the recorded track
read output level:	peak-to-peak amplitude

10.2 Typical Recording Current

The Typical Recording Current of the tape shall be between 85 % and 115 % of the Reference Recording Current.

Traceability to the Reference Recording Current is provided by the calibration factors supplied with each Secondary Standard Reference Tape.

10.3 Signal Amplitude

The Average Signal Amplitude, exclusive of missing pulses, at the recording density of 2 740 ftpmm shall be between -1,7 dB and 2,0 dB of the Standard Reference Amplitude.

Traceability to the Average Signal Amplitude of the Master Standard Reference Tape is provided by the calibration factors supplied with each Secondary Standard Reference Tape.

10.4 Resolution

The ratio of the Average Signal Amplitude at the physical recording density of 2 740 ftpmm to that at the physical recording density of 783 ftpmm shall be between 90 % and 110 % of the same ratio for the Master Standard Reference Tape.

Traceability to the resolution for the Master Standard Reference Tape is provided by the calibration factors supplied with each Secondary Standard Reference Tape.

10.5 Signal-to-Noise Ratio

The signal-to-noise ratio (SNR) is the average read signal power divided by the average integrated rms noise power over a specified bandwidth and is expressed in dB.

Procedure

1. The SNR shall be measured using a spectrum analyser. The spectrum analyser resolution bandwidth shall be 30 kHz and the video bandwidth shall be 300 Hz.
2. Measure the rms noise power over a section of tape. Integrate the rms noise power over the range from 1 MHz to 29 MHz and normalise for the resolution bandwidth. This result is dB_{NOISE}.
3. Measure the average read signal amplitude of the 2 740 ftpmm signal over the same section of tape using a spectrum analyser. Repeat this measurement over a minimum of 20 data sets, each set being at least 50 % of a track. Normalise this result to a 15 μm head width.

$$dB_{HF}(15) = dB(W) + 20 \log(15/W), \text{ where W is the width of the read head.}$$

The SNR is calculated from these results: $SNR = dB_{HF}(15) - dB_{NOISE}$

© ISO/IEC 2001 – All rights reserved

Copyright International Organization for Standardization
Provided by IHS under license with ISO
No reproduction or networking permitted without license from IHS
Not for Resale

The SNR shall be no less than -2dB relative to the SNR measured on the Master Standard Reference Tape.

10.6 Ease of erasure

When a tape has been recorded at 783 ftpmm with a recording current equal to the Test Recording Current and passed through a longitudinal steady erasing field of 320 000 A/m any remaining signal shall not exceed -35 dB of the Standard Reference Amplitude. The erasure field shall be reasonably uniform, for example, the field in the middle of a solenoid.

10.7 Tape quality

10.7.1 Missing pulses

A missing pulse is a loss of read signal amplitude. A missing pulse exists when the base-to-peak read signal is 30 %, or less, of half the Average Signal Amplitude for the recording density of 2 740 ftpmm on the same tape.

10.7.2 Missing pulse zone

A missing pulse zone shall commence with a missing pulse and ends when a length of 1 mm of track has been measured. If a missing pulse zone continues for a distance exceeding 1 mm, a further missing pulse zone shall result.

A missing pulse zone does not continue from one track to the next.

The missing pulse zone rate shall be less than 1 in 25 tracks and applies to both positive and negative azimuth tracks.

10.7.3 Overwrite

Overwrite is the ratio of the amplitude of the fundamental frequency of the residual of a low density recording after overwriting at a higher density to the amplitude of the fundamental frequency of the original low density recording.

Traceability to the overwrite ratio for the Master Standard Reference Tape is provided by the calibration factors supplied with each Secondary Standard Reference Tape.

Procedure

1. ac erase the tape.
2. Record at the physical density of 783 ftpmm and measure the amplitude of the fundamental frequency.
3. Overwrite at the physical recording density of 2 740 ftpmm and measure the amplitude of the fundamental frequency of the residual 783 ftpmm signal.
4. Repeat for the Secondary Standard Reference Tape.

Requirement

$$\text{Overwrite} = 20 \log \frac{\text{Residual amplitude of the fundamental frequency at 783 ftpmm after overwrite}}{\text{Amplitude of the fundamental frequency of the original recording at 783 ftpmm}} \text{ dB}$$

shall be no more than 1,5 dB of the Master Standard Reference Tape overwrite.

Section 4 - Requirements for an Interchanged Tape

11 Track Format

11.1 General

Information to be written to tape may consist of data bytes or control information. User data may be either fixed or variable in length. Fixed length user data is presented at the interface as a collection of fixed-length Logical Blocks. Variable length user data is presented at the interface as a single Logical Block. User data transferred across the interface is formed into Logical Block Sets (LBS) that may then be acted upon as the unit for compression when performed. There may be multiple Logical Block Sets in a user initiated write session. Logical Blocks are converted into Segment Data Packets as described in 11.2. Track Packets are described in 11.3, and Control Packets are defined in 11.4. Track Packet framing sync and modulation are described in 11.5. After transformation to Channel bits, tracks are written in pairs with positive and negative azimuths. Figure 30 shows the sequence of events transforming user data to track data packets written to tape.

© ISO/IEC 2001 – All rights reserved
Copyright International Organization for Standardization
Provided by IHS under license with ISO
No reproduction or networking permitted without license from IHS
Not for Resale

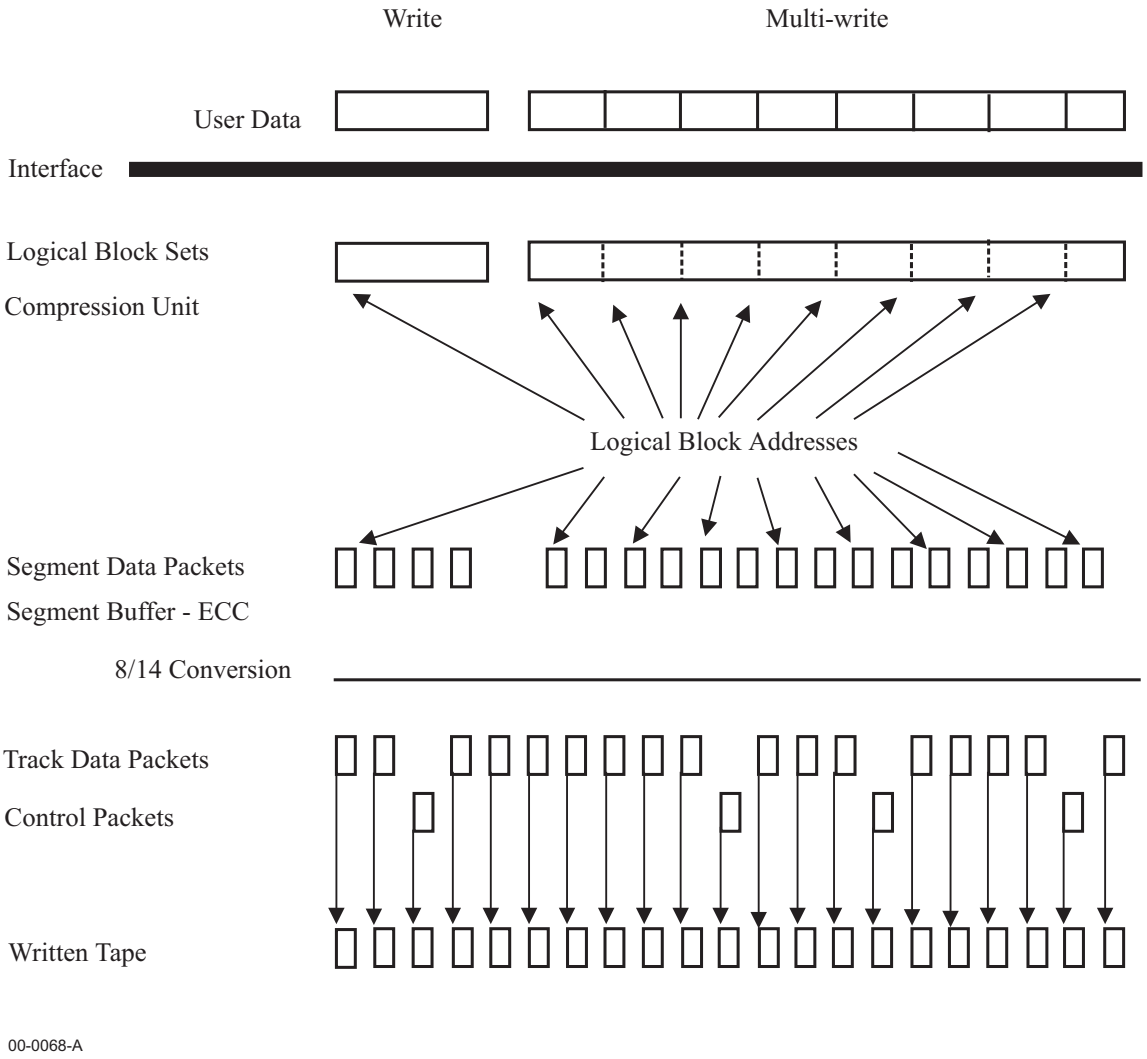

Figure 30 - Track format sequence

11.2 Physical Logical Block Format

11.2.1 Logical Block Set (LBS)

A Logical Block Set (LBS) is a collection of user bytes that is sent from the Host Computer across the interface to the tape drive for recording as one or more Logical Blocks. A LBS may contain from 1 to 8 191 Logical Blocks (LB).

The LBS length is variable in that contiguous LBSs may have different lengths

Compression, when performed, treats the LBS as the unit to be compressed. Changing between compression mode and normal (non-compression) mode within a LBS is not allowed. Thus it is possible that compressed and uncompressed LBS may be adjacent on the tape.

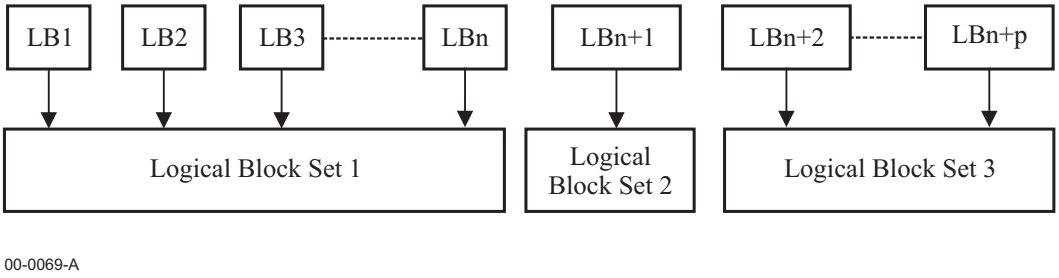

Figure 31 – Example of Logical Block Sets

--`,,```,,,,````-`-`,,`,,`,`,,`---

© ISO/IEC 2001 – All rights reserved

Copyright International Organization for Standardization
Provided by IHS under license with ISO
No reproduction or networking permitted without license from IHS
Not for Resale

11.2.2 Logical Blocks

Each Logical Block (LB) within an LBS shall have the same length which shall be from 1 to 262 144 bytes in length. Each LB within the LBS shall have a unique Logical Block Address (LBA) that is four bytes in length. LBAs shall be assigned in increasing order starting with 1 within each partition. Logical Blocks shall be directly accessible from the LBA.

Logical Blocks shall be divided into Segment Packets, each of which shall contain 64 bytes of user data. The data packets, along with control information, are put into a buffer (see 11.2.3) for writing on the tape.

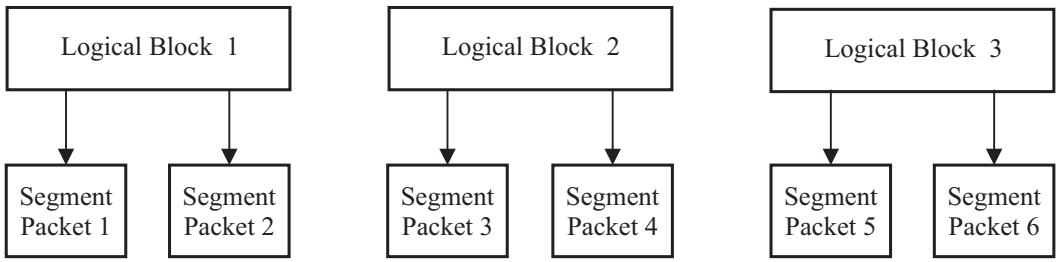

00-0070-A

Figure 32 - Example of Logical Block to Segment Data Packet transformation

11.2.3 Segment Packets

A segment is a set of 1220 Segment Packets (78 080 bytes) as shown in figure 33. Each element in the segment is a packet of 64 bytes. Each segment is divided into two areas:

- Segment Data/Overhead Packets: 1024 packets
- ECC area: 196 packets

The Segment Data/Overhead Packet area is a set of 1024 packets arranged in a 32 by 32 array (see figure 33). This area is used to store the LBS data and Segment Overhead Packets. The Segment Overhead Packets locate the positions where the LBSs start and end in the segment. A Logical Block Set shall start at the beginning of a Segment Data Packet boundary and each Segment Data Packet shall not include more than one LBS. Each Segment Data Packet shall be 64 bytes in length, therefore a Segment Data Packet may contain fill data if the LBS occupies fewer than 64 bytes. Fill data is not defined in this International Standard and shall be ignored during interchange.

The last packet of the segment, located in row 31 and column 31, shall be the Key Overhead Packet. If additional Segment Overhead Packets are required, they shall occupy consecutive locations in the segment, starting with row 31, column 30, and working backwards.

11.2.4 Segment Overhead Packets

The Segment Overhead Packets in the data area of a segment contain overhead information about the LBSs that are stored in the segment. This information includes:

- Location of all boundaries between LBSs in the segment
- Logical Block Address of the LBS to start in the segment
- Size and number of LBs within each LBS starting in the segment
- Tape partition, Volume initialisation count, and whether the LBS is compressed
- Segment flush indicator
- Segment CRC

The number of Segment Overhead Packets in a segment is variable and depends on how many LBSs are placed in a segment. This is due to variable LBS sizes. The Key Overhead Packet shall occupy the last packet location of the segment (row 31, column 31). If there are less than 7 LBS boundaries within the segment, the Key Overhead Packet shall be the only overhead packet in the segment, and LBS data shall occupy all other locations in the segment (up to and including row 31, column 30).

For each additional 8 LBS boundaries that exist in the segment, an additional Segment Overhead Packet is present in the segment starting at row 31, column 30, until all of row 31 is filled with overhead packets. The maximum number of LBS boundaries that shall exist in one segment is 247.

© ISO/IEC 2001 – All rights reserved
Copyright International Organization for Standardization
Provided by IHS under license with ISO
No reproduction or networking permitted without license from IHS
Not for Resale

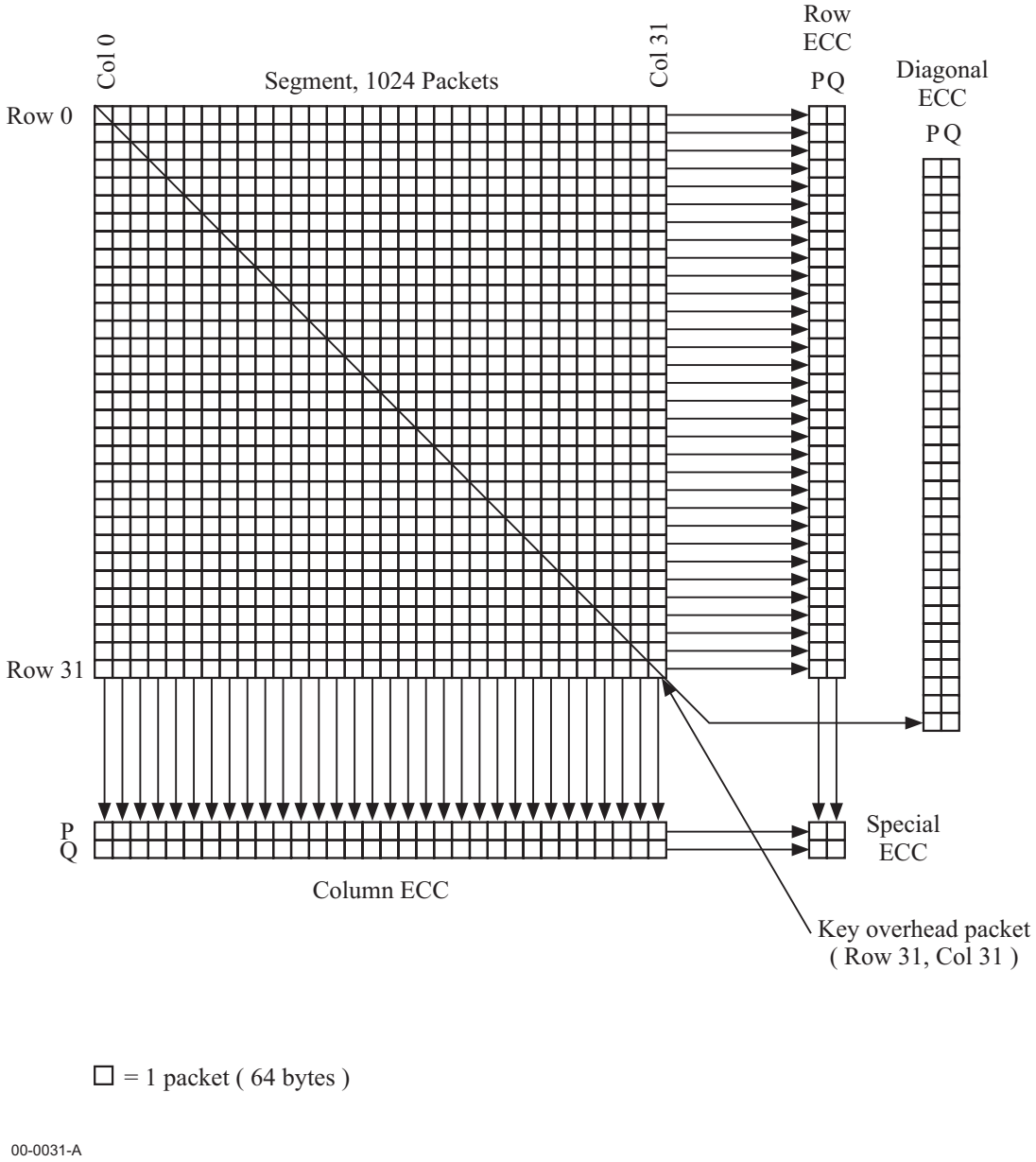

Figure 33 - Segment Organisation

11.2.4.1 Key Overhead Packet format

The 64 bytes of the Key Overhead Packet are formatted into fields as shown in figure 34. Each field, except the segment CRC field, shall have an 8-bit CRC for error detection.

For a segment that contains LBS data, the segment CRC and main key field are always valid. The information in the main key field specifies the number of additional overhead fields that contain valid information.

--`,,```,,,,````-`-`,,`,,`,`,,`---
© ISO/IEC 2001 – All rights reserved
Copyright International Organization for Standardization
Provided by IHS under license with ISO
No reproduction or networking permitted without license from IHS
Not for Resale

Byte position within a packet	Bytes	Contents
0 to 7	8	LBS boundary field
8 to 15	8	LBS boundary field
16 to 23	8	LBS boundary field
24 to 31	8	LBS boundary field
32 to 39	8	LBS boundary field
40 to 47	8	LBS boundary field (first boundary)
48 to 55	8	First LBS attributes field
56 to 59	4	Segment CRC
60 to 63	4	Main key field

Figure 34 - Key Overhead Packet format

11.2.4.1.1 LBS boundary fields

There shall be up to 6 LBS boundary fields in the Key Overhead Packet, with the first boundary field occupying bytes 40 to 47, the second occupying bytes 32 to 39, etc. Figure 35 shows the format of each 8-byte field.

Byte position	b7	b6	b5	b4	b3	b2	b1	b0
n	LSZ7	LSZ6	LSZ5	LSZ4	LSZ3	LSZ2	LSZ1	LSZ0
n+1	LSZ15	LSZ14	LSZ13	LSZ12	LSZ11	LSZ10	LSZ9	LSZ8
n+2	NLB5	NLB4	NLB3	NLB2	NLB1	NLB0	LSZ17	LSZ16
n+3	LBSC	NLB12	NLB11	NLB10	NLB9	NLB8	NLB7	NLB6
n+4	ECOL1	ECOL0	EBYTE5	EBYTE4	EBYTE3	EBYTE2	EBYTE1	EBYTE0
n+5	EROW4	EROW3	EROW2	EROW1	EROW0	ECOL4	ECOL3	ECOL2
n+6	0	0	0	0	0	Skip	Flush	Valid end
n+7	C7	C6	C5	C4	C3	C2	C1	C0

Figure 35 - LBS boundary field

The LBS boundary field consists of two parts: the first 4 bytes contain the information about the LBS and the second 4 bytes contain the segment location, LBS endpoint key, and LBS Boundary field CRC.

- LSZ: Logical Block Size bits 0 to 17. The Least Significant Byte is byte 0 of this field.
- NLB: Number of Logical Blocks per LBS. The msb of this 13-bit number is b6 of byte 3.
- LBSC: LBS Compression flag. If set to 0, this LBS is not compressed; if set to 1 this LBS is compressed.
- ECOL: LBS end column within this segment.
- EROW: LBS end row within this segment.
- EBYT: LBS end byte within the data packet defined by ECOL and EROW.
- Byte 6: b7 to b3 shall be set to ZERO.

  b2 shall be set to ONE if there is a single unused packet after the LBS endpoint, otherwise it shall be set to ZERO.

  b1 shall be set to ONE if the segment is flushed (see 11.2.6) after this endpoint, otherwise it shall be set to ZERO. A segment shall be flushed if there are no LBS data packets remaining in this segment for this write session.

© ISO/IEC 2001 – All rights reserved
Copyright International Organization for Standardization
Provided by IHS under license with ISO
No reproduction or networking permitted without license from IHS
Not for Resale

b0 shall be set to ONE if there is a valid end to a LBS in this segment, otherwise it shall be set to ZERO. If b0 is set to ZERO, b2 and b1 shall be ignored, and the contents of bytes 4 and 5 are not valid.

- CRC: An 8-bit CRC is generated over this entire 7-byte field according to the following polynomial: $x^8 + x^7 + x^2 + x^0$. See annex D.

11.2.4.1.2 First LBS attributes field

Figure 36 shows the format of the first LBS attributes field.

Byte position	b7	b6	b5	b4	b3	b2	b1	b0
48	LBA7	LBA6	LBA5	LBA4	LBA3	LBA2	LBA1	LBA0
49	LBA15	LBA14	LBA13	LBA12	LBA11	LBA10	LBA9	LBA8
50	LBA23	LBA22	LBA21	LBA20	LBA19	LBA18	LBA17	LBA16
51	LBA31	LBA30	LBA29	LBA28	LBA27	LBA26	LBA25	LBA24
52	INIT7	INIT6	INIT5	INIT4	INIT3	INIT2	INIT1	INIT0
53	INIT15	INIT14	INIT13	INIT12	INIT11	INIT10	INIT9	INIT8
54	PART7	PART6	PART5	PART4	PART3	PART2	PART1	PART0
55	CRC7	CRC6	CRC5	CRC4	CRC3	CRC2	CRC1	CRC0

Figure 36 - LBS Attributes field

- LBA: Logical Block Address of the first LBS that starts in this segment.
- INIT: Tape initialisation count. This field is incremented each time the tape is initialised.
- PART: Tape partition number. This number shall be either (00) or (01).
- CRC: An 8-bit CRC is generated over this entire 7-byte field according to the following polynomial: $x^8 + x^7 + x^2 + x^0$. See annex D.

11.2.4.1.3 Segment CRC field

Bytes 56 to 59 shall contain a 32-bit CRC used for post-correction error detection. All of the data area packets in a segment that contain LBS data are divided by the generator polynomial to produce the 4-byte CRC. The last data packet of a segment (which may contain fill data if a LBS ends in that packet) shall always be used as a complete packet in this calculation. Segment Overhead and skipped packets shall not be included in the CRC calculation. The polynomial used for the segment CRC is defined in annex E.

11.2.4.1.4 Main key field

The main key field consists of 4 bytes as shown in figure 37.

Byte position	b7	b6	b5	b4	b3	b2	b1	b0
60	0	0	0	0	0	0	0	0
61	0	0	Skip	Sys Data	LBS end	LBS start	First valid	Flush
62	COL4	COL3	COL2	COL1	COL0	IPK2	IPK1	IPK0
63	CRC7	CRC6	CRC5	CRC4	CRC3	CRC2	CRC1	CRC0

Figure 37 - Main key field format

- Byte 60: This byte is unused and shall be set to all ZEROs.
- Byte 61: b7 and b6 are not used and shall be set to ZERO

  b5 shall be set to ONE when a single unused packet is skipped (see 11.2.5), otherwise it shall be set to ZERO.

© ISO/IEC 2001 – All rights reserved

Copyright International Organization for Standardization
Provided by IHS under license with ISO
No reproduction or networking permitted without license from IHS
Not for Resale

b4 shall be set to ONE when the LBS data in this segment is not user Logical Block data, otherwise it shall be set to ZERO.

b3 shall be set to ONE to indicate that at least one LBS ends in this segment, otherwise it shall be set to ZERO.

b2 shall be set to ONE to indicate that at least one LBS starts in this segment, otherwise it shall be set to ZERO.

b1 shall be set to ONE to indicate that an LBS ends in this segment but does not start in the same segment, otherwise it shall be set to ZERO.

b0 shall be set to ONE to indicate that this segment has been flushed, otherwise it shall be set to ZERO.

- Byte 62: b7 to b3 shall indicate in which column of row 31 the last LBS boundary field is located.

  b2 to b0 shall indicate one of 8 starting addresses within the 64-byte packet where the last LBS boundary field begins.

- Byte 63: An 8-bit CRC is generated over this entire 7-byte field according to the following polynomial: $x^8 + x^7 + x^2 + x^0$. See annex D.

11.2.5 Skipped Segment Packets

A Segment Packet shall be skipped when there is only one packet in the segment, a LBS ends in the segment, and a further Overhead packet is required to note the start of a new LBS. Since in this state both the Overhead Packet and the Segment Data Packet are competing for the same packet area in the segment, this one packet is skipped and the new LBS will be started in the next segment. This condition can only exist in row 31 of the segment.

11.2.6 Segment ECC packets

The Reed-Solomon error correction redundancy provides for a two-packet correction in any row, column, or diagonal of the segment by using erasure pointers (see annex C). Erasure pointers result from missing or uncorrectable packets. Additionally, the row and column ECC packets can be corrected by a fourth set of special ECC packets.

11.2.6.1 Row ECC Packets

The entire 32-packet by 32-packet data/overhead area of the segment is used to generate Row ECC redundancy. Each row is used to generate two row ECC packets. The generation algorithm (see annex E) creates 4 bytes in each of the two row ECC packets from the associated bytes of all the same-row packets.

11.2.6.2 Column ECC Packets

The entire 32-packet by 32-packet data/overhead area of the segment is used to generate Column ECC redundancy. Each column is used to generate two column ECC packets. The generation algorithm (see annex E) creates 4 bytes in each of the two column ECC packets from the associated bytes of all the same-column packets.

11.2.6.3 Diagonal ECC Packets

The entire 32-packet by 32-packet data/overhead area of the segment is used to generate Diagonal ECC redundancy. Each diagonal is used to generate two diagonal ECC packets. The generation algorithm (see annex E) creates 4 bytes in each of the two diagonal ECC packets from the associated bytes of all the same-diagonal packets.

The diagonals are defined to each have 32 packets. A given diagonal *n* starts at column 0 and row *n*. The next element of the diagonal is found by adding 1 to the column and row numbers, modulo 32 (see table 1).

Table 1 - Diagonal ECC generation

Diagonal #	Starting row	Starting Column	Ending Row	Ending Column
0	0	0	31	31
1	1	0	0	31
2	2	0	1	31
n	*n*	0	*n*-1	31

© ISO/IEC 2001 – All rights reserved
Copyright International Organization for Standardization
Provided by IHS under license with ISO
No reproduction or networking permitted without license from IHS
Not for Resale

11.2.6.4 Special ECC Packets

Four additional ECC packets are generated from the 32 column or 32 row ECC packets (see annex C and figure 33). These 4 special ECC packets are used to correct missing column or row ECC packets. When these ECC packets are referred to in the packet LPA (see 11.3.2) they are identified by the state of bits within the format as follows:

	Q=0	Q=1
S=0		
S=1		

11.2.7 Segment flush

A segment flush shall occur whenever a Splice Position Marker (SPM) is required to be written to tape (see 11.4 and 12.3).

Ideally all 1 220 Segment Packets (1 024 Data/Overhead Packets and 196 ECC packets) are formatted into Track Packets (see 11.3) and written to tape prior to the SPM. However, there is also the case where the data ends and does not completely fill the segment prior to the SPM. This results in a partial segment written to the tape prior to the SPM.

When a partially full segment is flushed, only those packets that contain LBS data, Segment Overhead, and all of the ECC packets shall be recorded on the tape. This results in unused or missing packet locations on the tape for the partial segment (see 11.4).

11.3 Track Packet format

A Track Packet consists of a 64-byte segment packet, a Virtual Packet Address, a Local Packet Address, and CRC/ECC bytes to form a 74-byte unit, of which 72-bytes are written to tape following 1/6 RLL encoding. Figure 38 shows the format of the Track Packet.

Packet Element	Label	Byte Position	Contents
Virtual packet Address	VPA	0 and 1	Extension to address
Local Packet Address	LPA	2 and 3	Type of packet and where located
Packet data	PKDATA	4 to 67	64-byte Segment Packet
Packet CRC	PKCRC	68 to 71	4-byte packet CRC
Packet ECC P	PKECCP	72	Reed-Solomon Redundancy, P
Packet ECC Q	PKECCQ	73	Reed-Solomon Redundancy, Q

Figure 38 - Track Packet format

11.3.1 Virtual Packet Address

The Virtual Packet Address (VPA) is a 2-byte field that is associated with a write session. The initial value of the VPA for the first time a tape is written shall be set to 1, and shall be incremented by 1 for each successive time the tape is written. Use of the VPA allows a receiving system to be able to reject good Track Packets from an older write session that are not intended to be read. Such packets may exist in areas associated with speed changes of the generating system (see 11.4).

The VPA is included when calculating the CRC and Reed-Solomon redundancy, but the VPA shall not be written with the Track Packet on the magnetic tape. The VPA may be determined by using the packet error correction on a number of packets. The VPA derived from this calculation shall be used to ensure that only a packet with the correct VPA will be found as good. If a good packet from an old session (with a different VPA) is read, it shall be discarded.

11.3.2 Local Packet Address

The local packet address (LPA) is a 2-byte field stored in bytes 2 and 3 of the Track Packet. The LPA does not reside in the segment; it shall indicate whether the packet is a Data/ECC packet or a control packet. If it is a Data/ECC packet, it shall contain the segment address for the packet. This allows Data/ECC packets to be located unambiguously in the correct segment within 4 complete buffer groups, where each buffer group contains 6 segments.

--`,,```,,,,````-`-`,,`,,`,`,,`---

© ISO/IEC 2001 – All rights reserved

Copyright International Organization for Standardization
Provided by IHS under license with ISO
No reproduction or networking permitted without license from IHS
Not for Resale

- Data packet LPA

15	14	13	12	11	10	9	8	7	6	5	4	3	2	1	0
Buffer number		S2	S1	S0	Row number					Column number					R

Buffer No: shall indicate the buffer number and shall be set to (0) to (3)

S2 to S0: shall indicate the segment number and shall be set to (0) to (5)

Row: shall indicate the row within the segment occupied by this data packet and shall be set to 0 to 31

Column: shall indicate the column within the segment occupied by this data packet and shall be set to 0 to 31

R: shall be set to ONE if this packet is rewritten, otherwise shall be set to ZERO

- Row ECC packet LPA

15	14	13	12	11	10	9	8	7	6	5	4	3	2	1	0
Buffer number		1	1	S2	S1	S0	0	0	P/Q	Row number					R

Buffer No: shall indicate the buffer number and shall be set to (0) to (3)

b13 to b12: shall be set to ONE ONE

S2 to S0: shall indicate the segment number and shall be set to (0) to (5)

Row: shall indicate the row within the segment occupied by this data packet and shall be set to 0 to 31

b8 to b7: shall be set to ZERO ZERO

P/Q: when set to ZERO it shall indicate ECC P, when set to ONE it shall indicate ECC Q

R: shall be set to ONE if this packet is rewritten, otherwise shall be set to ZERO

- Column ECC packet LPA

15	14	13	12	11	10	9	8	7	6	5	4	3	2	1	0
Buffer number		1	1	S2	S1	S0	0	1	P/Q	Column number					R

Buffer No: shall indicate the buffer number and shall be set to (0) to (3)

b13 to b12: shall be set to ONE ONE

S2 to S0: shall indicate the segment number and shall be set to (0) to (5)

Row: shall indicate the row within the segment occupied by this data packet and shall be set to 0 to 31

b8 to b7: shall be set to ZERO ONE

P/Q: when set to ZERO it shall indicate ECC P, when set to ONE it shall indicate ECC Q

R: shall be set to ONE if this packet is rewritten, otherwise shall be set to ZERO

--`,,```,,,,````-`-`,,`,,`,`,,`---

© ISO/IEC 2001 – All rights reserved
Copyright International Organization for Standardization
Provided by IHS under license with ISO
No reproduction or networking permitted without license from IHS
Not for Resale

- Diagonal ECC packet LPA

15	14	13	12	11	10	9	8	7	6	5	4	3	2	1	0
Buffer number		1	1	S2	S1	S0	1	0	P/Q	Diagonal number					R

Buffer No: shall indicate the buffer number and shall be set to (0) to (3)

b13 to b12: shall be set to ONE ONE

S2 to S0: shall indicate the segment number and shall be set to (0) to (5)

Row: shall indicate the row within the segment occupied by this data packet and shall be set to 0 to 31

b8 to b7: shall be set to ONE ZERO

P/Q: when set to ZERO it shall indicate ECC P, when set to ONE it shall indicate ECC Q

R: shall be set to ONE if this packet is rewritten, otherwise shall be set to ZERO

- Special ECC packet LPA

15	14	13	12	11	10	9	8	7	6	5	4	3	2	1	0
Buffer number		1	1	S2	S1	S0	1	1	1	1	1	1	S	P/Q	R

Buffer No: shall indicate the buffer number and shall be set to (0) to (3)

b13 to b12: shall be set to ONE ONE

S2 to S0: shall indicate the segment number and shall be set to (0) to (5)

b8 to b3: shall be set to all ONEs

S: when set to ZERO it shall indicate the first row of the special ECC and ONE to indicate the second row of the special ECC.

P/Q: when set to ZERO it shall indicate ECC P, when set to ONE it shall indicate ECC Q

R: shall be set to ONE if this packet is rewritten, otherwise shall be set to ZERO

- Control packet LPA

15	14	13	12	11	10	9	8	7	6	5	4	3	2	1	0
Buffer number		1	1	1	1	1	0	0	0	Control packet type number					0

Buffer No: shall indicate the buffer number and shall be set to (0) to (3)

b13 to b9: shall be set to all ONEs

b8 to b6: shall be set to all ZEROs

Type: the control packet type number (see 11.4)

b0: shall be set to ZERO

11.3.3 Packet data

The packet data field shall contain the Data/ECC packets from the segment for the location specified in the LPA or the data area of a control packet for the Control Packet specified in the LPA. Packets shall always be recorded in their entirety; "fill data" completes packets that are associated with the end of an LBS where they are not completely filled by LBS data. Fill data is not defined by this International Standard and shall be ignored in interchange. Packet data for control packets are defined in 11.4.

© ISO/IEC 2001 – All rights reserved

Copyright International Organization for Standardization
Provided by IHS under license with ISO
No reproduction or networking permitted without license from IHS
Not for Resale

11.3.4 Packet CRC

A 32-bit CRC used for packet error detection shall be included in the packet. The CRC calculation includes the VPA, LPA and packet data. See annex F for generation of the packet CRC.

11.3.5 Packet Reed-Solomon ECC

A 16-bit Reed-Solomon redundancy ECC code shall form the last 2 bytes of the Track Packet. It shall include the VPA, LPA, packet data, and CRC in its calculation. See annex B. for this calculation. This ECC is used for both error detection and error correction.

11.4 Control packet format

Control packets contain information pertaining to their physical location (tape count), their logical location (LBA), identification of gap types and splice points, and performance and configuration information. Table 3 shows the format of a control packet data area.

Control packets may occur anywhere in the track, however there shall always be a control packet in the centre of the track. This control packet is a Normal Control Packet. Control packets, and their codes, are shown in table 2.

Table 2: Control packet type definition

Type	Description	Usage
(0)	Not defined	Ignored in interchange
(1)	Normal	One per track at track centre for all tracks
(2)	Segment empty	Segment empty, no data or rewrites
(3)	Flush SPM	Splice Position Marker after data flush
(4)	Tape mark SPM	Tape mark Splice Position Marker
(5)	Fixed SPM	Splice Position Marker without prior flush
(6)	OWG1	Overwritable gap type 1
(7)	Random erase gap	Random content gap for erasing
(8)	BOD	Beginning of data area gap
(9)	EOD	End of data area gap
(A)	Fixed erase gap	Normal content gap for erasing
(B)	OWG1 trailer	Always follows OWG1 gap
(C)	OWG2	Overwritable gap type 2
(D)	File mark	File mark gap
(E)	Set mark	Set mark gap
(F)	Pre SPM skip	Occurs prior to SPM, mixed in with data
(10)	Post data dummy	Occurs prior to track joint
(11)	Pre data dummy	Occurs after track joint
(12) to (1F)	Not defined	Ignored in interchange

The control packet type is recorded in the control packet data field at byte 15, bits 4 to 0.

--`,,```,,,,````-`-`,,`,,`,`,,`---
© ISO/IEC 2001 – All rights reserved
Copyright International Organization for Standardization
Provided by IHS under license with ISO
No reproduction or networking permitted without license from IHS
Not for Resale

Table 3 - Control packet data area format

Byte position	Contents	Description
0	GSAD LSB	Global Segment Address LSB
1	GSAD	Global Segment Address
2	GSAD MSB	Global Segment Address MSB
3	Tape Partition	Tape Partition Number
4	LBA LSB	Logical Block Address LSB
5	LBA	Logical Block Address
6	LBA	Logical Block Address
7	LBA MSB	Logical Block Address MSB
8	Track LSB	Track Number LSB
9	Track MSB	Track Number MSB
10	PHYPKT	Physical Packet Number
11	Control	Gap Flag, Speed Written, Physical Packet Number
12	Flush	Flush Data Packet Address
13	Flush	Flush Data packet Address
14	Flush Seg	Flush Segment
15	Control, Type	Flush system data bit, Control packet type
16	VPA LSB	Virtual Packet Address LSB
17	VPA MSB	Virtual Packet Address MSB
18	Tape Count LSB	Tape Count LSB
19	Tape Count MSB	Tape Count MSB
20	INIT Count LSB	Initialisation count LSB
21	INIT Count MSB	Initialisation count MSB
22	(22)	
23	(22)	
24	File Mark Count LSB	File Mark Count LSB
25	File Mark Count MSB	File Mark Count MSB
26	Set Mark Count LSB	Set Mark Count LSB
27	Set Mark Count MSB	Set Mark Count MSB
28	(22)	
29	(22)	
30	(22)	
31	(22)	
32 to 64	Undefined	Ignored in interchange

Control packet data area content descriptions follow.

- Byte 0: Global Segment Address LSB
- Byte 1: Global Segment Address
- Byte 2: Global Segment Address MSB

© ISO/IEC 2001 – All rights reserved

Copyright International Organization for Standardization
Provided by IHS under license with ISO
No reproduction or networking permitted without license from IHS
Not for Resale

The Global Segment Address (GSA) is a 24-bit address whose value is in units of segments

- Byte 3: Tape partition number into which this control packet was written. In this International Standard, only the values (00) and (01) are valid.
- Byte 4: Logical Block Address LSB
- Byte 5: Logical Block Address
- Byte 6: Logical Block Address
- Byte 7: Logical Block Address MSB

The Logical Block Address (LBA, see 11.2.2) shall be the first LBA of the most recent LBS filling the segment at the time the control packet was written to tape. Therefore in a given track, the LBA of a control packet can be greater than the LBA of the data packets in the same track. For SPM control packets associated with a splice, this LBA is for the start of the LBS data following the SPM area.

- Byte 8: Track number LSB
- Byte 9: Track number MSB

These bytes specify the number of the track on which the packet was written. The lsb of byte 8 indicates the azimuth of the track (0 = Positive and 1 = Negative).

- Byte 10: Physical packet number indicates the location within the track associated with this control packet.
- Byte 11:

b7	b6	b5	b4	b3	b2	b1	b0
0	0	IPG	Speed written at			PHPKT 9	PHPKT 8

  - b7 and b6: shall be set to ZERO ZERO
  - b5: Shall be set to ONE for tracks that contain only control packets, otherwise it shall be set to ZERO.
  - b4 to b2: Shall indicate the speed at which the tape was written when this packet was written

    001 Full Speed (FS)

    010 1/2 FS

    011 1/3 FS

    100 1/4 FS

    101 1/5 FS

    110 1/6 FS
  - b1 to b0: The most significant bits of the Physical Packet Number (see byte 10)
- Byte 12 and 13:

Byte	b7	b6	b5	b4	b3	b2	b1	b0
12	0	Flush point row					Flush point column	
13	Flush point column			Last overhead column				

This field is valid for Splice Position Marks (SPM) and contains the flush data packet address of the segment preceding the SPM. It shall specify the location of the last data packet (row and column), the flush point, and the last overhead packet. This determines which packets are required in a flushed segment.

- Byte 14: b7 to b3 shall be set to all ZEROs.

  b2 to b0 shall specify the segment number of the segment flushed.

© ISO/IEC 2001 – All rights reserved
Copyright International Organization for Standardization
Provided by IHS under license with ISO
No reproduction or networking permitted without license from IHS
Not for Resale

- Byte 15:

b7	b6	b5	b4	b3	b2	b1	b0
Flush	SPM	System	Control Packet Type				

  - b7: This bit indicates that the control packet is in a Flush area. This means that the GSA in the control packet belongs with the segment after the splice point. This bit shall be set to ONE during the Flush SPM tracks and is cleared after the OWG1 trailer track pair.
  - b6: This bit shall be set to ONE to indicate that an SPM area is associated with an OWG. It shall be set to ZERO when the OWG Gap is completed.
  - b5: This bit shall be set to ONE to indicate that this SPM precedes system data. It shall be set to ZERO to indicate that the SPM precedes user data.
  - b4 to b0: Control packet type
- Byte 16 and 17: Virtual Packet Address. This information is redundant since the VPA had to be known in order to read the packet.
- Byte 18 and 19: The Tape count is a value that reflects a position on the tape relative to BOT and EOT at the time the packet was written (see annex J).
- Byte 20 and 21: This field shall be a record of the number of times the tape has been initialised. This field shall be set to (1) the first time the tape is initialised and incremented by (1) each subsequent time.
- Byte 22 and 23: Shall each be set to (22)
- Byte 24 and 25: This number shall reflect the number of file marks written in the current tape partition.
- Byte 26 and 27: This number shall reflect the number of set marks written in the current tape partition.
- Byte 28 and 31: Shall each be set to (22).
- Byte 32 to 64: The contents of these bytes are not specified by this International Standard and shall be ignored upon interchange.

11.5 Packet framing sync

All data and control packets are encoded (see annex G) prior to writing information to the tape. In addition, a packet framing sync is written to tape after each Track Packet. A packet framing sync signal is a unique signal in the channel domain to provide synchronisation for Track Packet detection. This signal does not obey the run-length restriction of the channel modulation code. The sync signal does not have a byte symbol associated with it, meaning it is not decoded to a byte symbol by the modulation decoder. This signal is 16 bit cells long and shall be (X0001000000001000), where X is set to ONE or ZERO depending on the last data written

Detection of the packet framing sync signal identifies the start of a Track Packet.

12 Tape Format

The physical format of a track consists of 387 Track Packets per track (see figure 39). The leading edge of the each track shall have a track sync area that is the maximum recording frequency tone of alternating ONEs and ZERO's and precedes the Track Packets. Each track shall have a Normal Control Packet that shall be located near the physical centre of the track.

© ISO/IEC 2001 – All rights reserved

Copyright International Organization for Standardization
Provided by IHS under license with ISO
No reproduction or networking permitted without license from IHS
Not for Resale

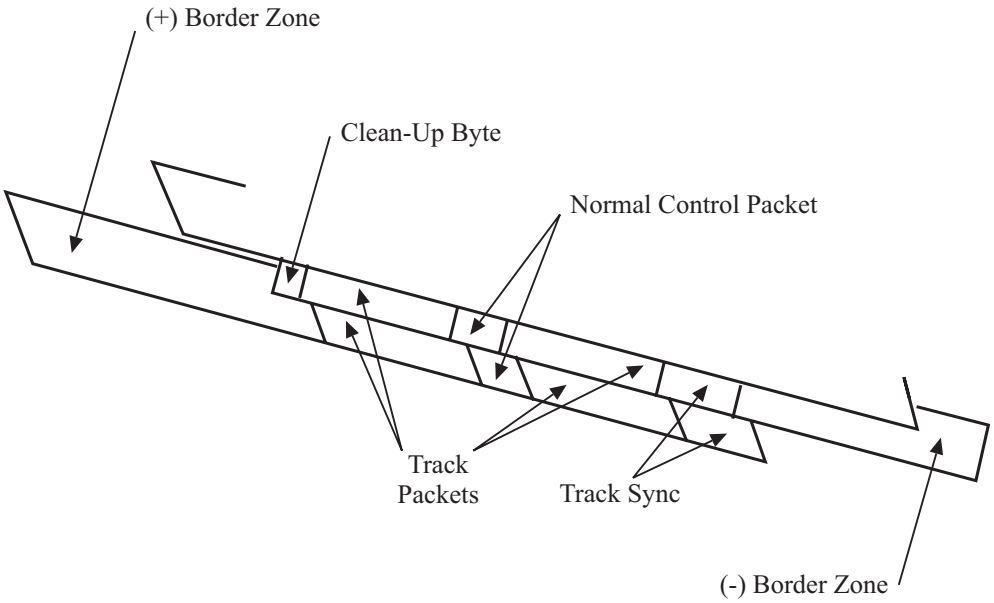

Figure 39 - Track Format

There are two generic types of tracks: data (including ECC) and gap. Data tracks may contain Data/ECC Track Packets and some types of control packets. Gap tracks contain only control packets (and also the flush SPM data packet). Gap tracks are used in the generation of the tape format structure.

12.1 Track elements

Each track consists of a Border zone, track sync area (128-Channel bytes), Data Track Packets (193-Track Packets), Normal Control Packet, Data Track Packets (193-Track Packets), and a clean-up Channel-byte in the negative azimuth tracks. The contents of the clean-up byte are not defined by this International Standard and shall be used to avoid a run-length violation on the tape after the last valid byte. The Border zone shall be a pattern of alternating ONEs and ZEROs at the maximum recording frequency. The Border zone appears after the second set of Data Packets in positive azimuth tracks (242-Channel bytes) and before the track sync area in negative azimuth tracks (241-Channel bytes). The track sync area shall be a pattern of alternating ONEs and ZEROs at the maximum recording frequency.

12.2 Data track format

The typical data track consists of data/ECC Track Packets with one Normal Control Packet at its centre. Segment empty type of control packet may be located within the data track. This control packet indicates that no data was available to write as the track was being formatted for writing. The Pre-SPM skip control packet is the only other type of control packet that is allowed within a data track. The Pre-SPM skip control packet shall be used only preceding the Flush SPM area on the tape.

Data packets are not normally recorded to a data track in linear segment address order due to the fact that two tracks are written simultaneously and to the rewrite process.

12.2.1 Order of packets in a data track

The order of Tape Packets from a given segment as they appear in the track is not specified by this standard. Their order depends on rewrite activity and availability of data packets in the segment. With no rewrite activity, the sequence of data/ECC packets taken from the segment and written alternately to the track pair, shall adhere to the following:

- Packets are taken from each row in a segment in increasing order
- The two packets of Row ECC are written after each row of data is written
- After row 31 data and ECC are written, the entire Column ECC, Diagonal ECC and special ECC areas for the segment are written.

12.2.2 Rewrite

Rewrite packets shall consist of any packet in the segment that was not read correctly during read-after-write checking. Rewrite packets shall be inserted in tape tracks in one of three ways:

© ISO/IEC 2001 – All rights reserved
Copyright International Organization for Standardization
Provided by IHS under license with ISO
No reproduction or networking permitted without license from IHS
Not for Resale

- If the number of rewrite packets is less than half of the capacity of the track pair, the rewrite packets are alternatively written after the midpoint of the track pair.
- If the number of rewrite packets is greater than half of the capacity of the track pair, the rewrite packets shall be alternatively written starting at the leading edge of the track pair.
- If there are some rewrite packets to be written, but less than a track pair, and there are no new data packets available to be written from the segment, some or all of the rewrite packets will be rewritten more than once during the track.

12.3 Gap tracks

Gap tracks are used to define unique locations on the tape. With the exception of the Flush SPM used in a splice point, all of the unique points on the tape shall be composed entirely of gap tracks.

- BOD and EOD areas

  Beginning of Data (BOD) and End of Data (EOD) areas on a tape are gap tracks and shall consist solely of BOD and EOD control packets respectively. These areas define the beginning and end of tape partitions.

- Erased areas

  Areas on the tape that are overwritten for purposes of erasing are gap tracks that shall consist of either random or normal erase gap control packets.

- Splice points

  Splice points on the tape that have not been appended to are identified by the following sequence of gap tracks

  - Splice Position Marker (SPM) – 2 pairs of tracks
  - Overwritable Gap Type 1 (OWG1) – 20 pairs of tracks

- OWG1 Trailer mark – 1 pair of tracks

When appending to a splice point, the append operation shall start in the OWG1 gap area; the SPM shall not be overwritten. The append operation shall always start with an OWG Type 2 gap area. After an append operation the splice point sequence of tracks on the tape shall include:

- Splice Position Marker (SPM)
- Overwritable Gap Type 1 (OWG1)
- Overwritable Gap Type 2 (OWG2) associated with a new append consisting of 10 pairs of OWG2 tracks with new VPA for this write session.

The SPM gap is fixed in length. The flush SPM track shall consist of Flush SPM control packets intermixed with rewritten data packets. The number of tracks that define the flush SPM area is related to rewriting, and may be lengthened if rewrites are required.

- Tape Marks

  Tape marks shall be either File marks or Set marks. They are a sequence of tracks that shall include:

  - Tape Mark (File or Set)
  - Tape Mark SPM
  - Overwritable Gap Type 1 (OWG1)

  If the tape mark is the first in an append sequence, it shall be preceded by an OWG2 gap track(s). Multiple, up to 256, tape marks can be placed contiguously on tape.

- Track joints

  Track joints are areas on the tape associated with speed changes that may occur during writing the tape. While writing data tracks and a speed change is required, a minimum of 1 Post-data Dummy gap track shall be written before performing the speed change. After the speed change is completed, there shall be a minimum of 1 Pre-data Dummy gap track written on the tape before resuming normal data tracks.

© ISO/IEC 2001 – All rights reserved

Copyright International Organization for Standardization
Provided by IHS under license with ISO
No reproduction or networking permitted without license from IHS
Not for Resale

13 Method of recording

The method of recording shall be as follows:

– A ONE shall be represented by a flux transition at the centre of a bit cell.

– A ZERO shall be represented by no flux transitions in the bit cell.

13.1 Physical recording density

The nominal maximum physical recording density shall be 2 740 ftpmm. It occurs for a pattern of alternating ONEs and ZEROs. The nominal bit cell length is 0,182 5 μm. The nominal length between transitions at the maximum physical recording density is 0,365 0 μm. This results in a minimum recording wavelength of 0,729 9 μm.

13.1.1 Long-term average bit cell length

The long-term average bit cell length for each track shall be measured over a minimum of 200 consecutive packets. It shall be within 0,05 % of the nominal bit cell length.

13.1.2 Short-term average bit cell length

The short-term average bit cell length shall be the average taken over any 32 bit cells. The short-term average bit cell length shall be within 0,1 % of the long-term average bit cell length for the preceding track.

13.1.3 Rate of change

The rate of change of the short-term average bit cell length, taken over any two consecutive 32-bit cell lengths, shall not exceed 0,05 %.

13.2 Bit shift

The maximum displacement of any ONEs zero crossing, exclusive of missing pulses, shall not deviate by more than 32 % from the expected position as defined by the average bit cell length. See annex H for the method of measurement.

13.3 Amplitude of Data Signals

The signal average amplitude over a minimum of 2 500 flux transitions at 2 740 ftpmm shall be between -1,7 dB and 2,0 dB of the Standard Reference Amplitude.

14 Track geometry

14.1 General

The helical track pattern is formed by the relationship between the direction of tape motion and the axis of rotation of a pair of heads, one of which has a positive azimuth angle and the other a negative azimuth angle. The direction of recording is away from the Tape Reference Edge. The track location and dimensions shall be shown in figure 40.

--`,,```,,,,````-`-`,,`,,`,`,,`---
© ISO/IEC 2001 – All rights reserved
Copyright International Organization for Standardization
Provided by IHS under license with ISO
No reproduction or networking permitted without license from IHS
Not for Resale

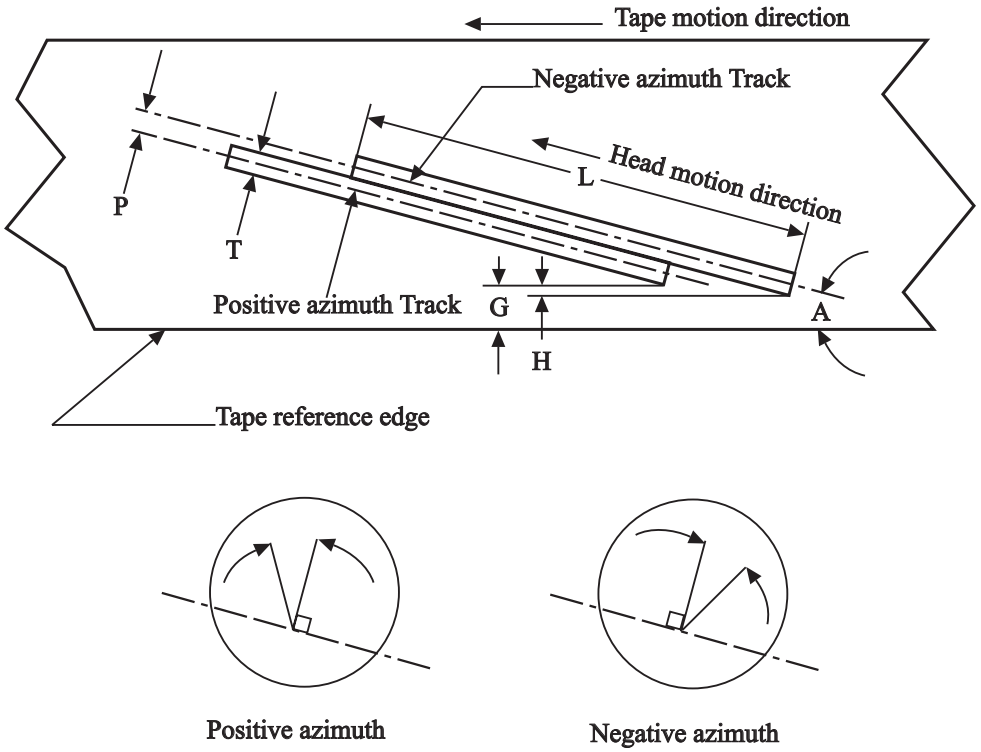

00-0014-A

A Track angle
T Track width
P Track pitch
L Track length
G Positive azimuth track guard band
H Negative azimuth track guard band

Figure 40 - Track location and dimensions

14.2 Track pitch

The track pitch between any two adjacent tracks shall be 9,10 μm ± 0,50 μm. This requirement shall not apply at track joints or append points.

14.3 Average track pitch

The average track pitch, taken over any group of 30 consecutive tracks, shall be 9,10 μm ± 0,30 μm. The track pitch at track joints or append points shall not be included in this average.

14.4 Track width

The measured track width shall be 9,10 μm ± 1,10 μm. This requirement shall not apply at track joints or append points.

14.5 Track angle

The angle of each track with respect to the Tape Reference Edge shall be between 4,885 8° and 4,892 2 °.

14.6 Track length

The length of each track shall be 73,317 mm ± 0,070 mm.

14.7 Guard band

There shall be a guard band of width 1,027 mm ± 0,015 mm extending from the start of the recorded positive azimuth tracks to the Tape Reference Edge. The start of the recorded negative azimuth track shall be 0,042 mm ± 0,002 mm below the start of the recorded positive azimuth track.

© ISO/IEC 2001 – All rights reserved

Copyright International Organization for Standardization
Provided by IHS under license with ISO
No reproduction or networking permitted without license from IHS
Not for Resale

14.8 Azimuth angles

The positive azimuth angle shall be $20{,}00^{o} \pm 0{,}16^{o}$.

The negative azimuth angle shall be $-20{,}00^{o} \pm 0{,}16^{o}$.

14.9 Track linearity

The edge of each recorded track shall be contained between two parallel lines 27 μm apart. The parallel lines shall be at the nominal track angle of the recorded track.

15 Layout of a tape

15.1 General

The layout of the tape is shown in figure 41. A tape shall consist of 1 or 2 user partitions. The partitions shall be numbered sequentially with partition 0 being the first partition on the tape. The elements of the tape format are defined in the following clauses. Tape counts (see annex J) are used to indicate the locations of various elements of the tape format. Writing the entire tape with Erase Gaps (see 12.3) shall erase a tape. When a tape is formatted, a system partition followed by the configured number of user partitions (one or two) shall be written. The system partition shall be written a fixed number of Tape counts from the beginning of tape (BOT) and will contain a beginning of data (BOD) area, sixteen identical tape directory records (TDR) and an end of data (EOD) area. User partition(s) are written following the end of the system partition and shall contain a BOD area, sixteen identical tape header records (THR), user data, SPM, sixteen identical TDRs and an EOD area. Initialised tapes shall have an SPM with the LBA set to 0 where user data is to be written. Early warning (EW) and the virtual end of partition (EOP) shall be indicated by Tape count values. The physical end of a user partition shall be indicated by a fixed Tape count (see table 5) and shall be approximately 0,25 m before EOP. The distance between EW and EOP shall be approximately 0,25 m and shall be indicated by a fixed Tape count. The distance between EOP and BOD, when a partition follows EOP, shall be approximately 0,25 m and shall be indicated by a fixed Tape count. The physical end of the last user partition on the tape shall be indicated by a fixed Tape count and shall be a minimum of 0,5 m from EOT.

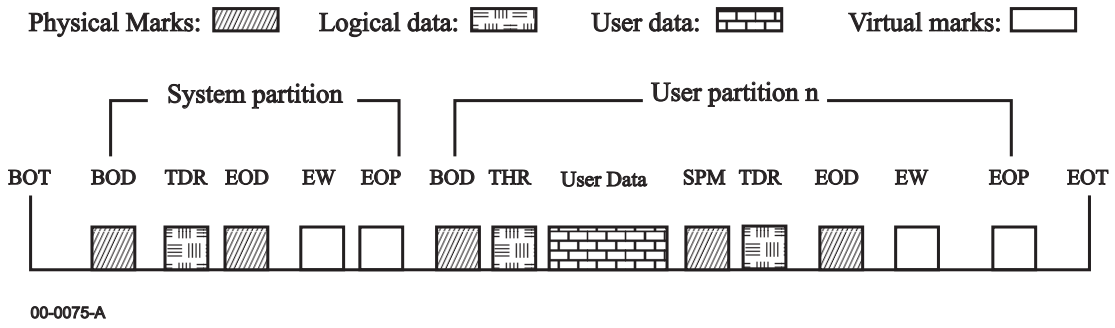

Figure 41 -Layout of a tape

15.2 Beginning of Partition

All partitions shall begin with a BOD area. The BOD area for the system partition shall consist of 290 tracks, each such track consisting of BOD control packets. It shall begin with track 1 a minimum of 0,5 m from the BOT and shall be indicated by Tape count. The BOD area for user partition 1 shall consist of 1 448 tracks, each such track consisting of BOD control packets. It shall begin with track 1 following the EOP of the system partition and shall be indicated by Tape count. The BOD area for user partition 2, if present, shall consist of 1 448 tracks, each such track consisting of BOD control packets. It shall begin with track 1 following the EOP of user partition 1, and shall be indicated by Tape count.

15.3 Tape Header Record (THR)

A THR shall be in each user partition. Recording of the THR shall follow the BOD area and precede the user data in the user partition. The THR shall be written 16 times to ensure data reliability. The contents of the THR are shown in table 4. The THR is logically addressed with unique LBAs from (FFFFFF40) to (FFFFFF4F)

© ISO/IEC 2001 – All rights reserved
Copyright International Organization for Standardization
Provided by IHS under license with ISO
No reproduction or networking permitted without license from IHS
Not for Resale

Table 4 - Tape Header Record

Byte Position	Description
1	Record type – shall be set to (10)
2	Revision number – shall be set to (06)
3	Partition ID – location of this THR
4	Downward revision compatibility – shall be set to (06)
5 and 6	Initialisation count – number of times media formatted/partitioned
7	Format type – shall be set to (00)
8	Partition number – number of user partitions on tape
9 and 10	User partition 0 start Tape count – physical beginning of user partition 0
11 and 12	User partition 0 size – size of user partition 0 in megabytes
13 and 14	Reserved – shall be set to (00)
15 and 16	User partition 1 start Tape count – physical beginning of user partition 1 – shall be set to (00) for single partition tape.
17 and 18	User partition 1 size – size of user partition 1 in megabytes – shall be set to (00) for single partition tape
19 and 20	Reserved – shall be set to (00)
21 and 22	System partition start Tape count – physical beginning of the system partition
23 and 24	System partition size – shall be set to (00)
25 to 90	Reserved – shall be set to (00)

15.4 Data area

The data area shall be recorded immediately following the THR in the user partition(s). The data area shall consist of Data packets, ECC packets and Gap packets. File Marks and Set Marks shall be recorded at the request of the Host. Data packets or ECC packets may be rewritten if they contain errors. The packet headers of the rewritten physical blocks shall be identical to the original packet headers with the exception of the entries that specify the location on tape. Packets may be rewritten multiple times. A Splice Position marker (SPM) shall be written at the end of the user data and before the Tape Directory Record for later append operations (see 12.3).

15.5 Tape Directory Record

The TDR contains information that defines the contents of each partition. The TDR also contains a copy of the THR. The TDR shall be written to tape 16 times and are logically addressed with unique LBAs from (FFFFFFC0) to (FFFFFFCF). The contents of the TDR shall be as defined in table 5.

--`,,```,,,,````-`-`,,`,,`,`,,`---
© ISO/IEC 2001 – All rights reserved

Copyright International Organization for Standardization
Provided by IHS under license with ISO
No reproduction or networking permitted without license from IHS
Not for Resale

Table 5 - Tape Directory Record

Byte Position	Description
1	Record type – shall be set to (20)
2	Revision number – shall be set to (06)
3 to 92	Tape header Record information
93 and 94	Last VPA for user partition 0
95 and 96	Tape count at beginning of THR for user partition 0
97 and 98	Tape count at beginning of data for user partition 0
99 and 100	Tape count at beginning of TDR for user partition 0
101 and 102	Tape count at end of EOD for user partition 0
103 and 104	Tape count for Early Warning for user partition 0
105 and 106	Tape count for beginning of EOP for user partition 0
107 and 108	Tape count for end of EOP for user partition 0
109 to 112	Last LBA for user partition 0
113 and 114	Last LBA Tape count for user partition 0
115 and 116	Last VPA for user partition 1 (set to (00) if not present)
117 and 118	Tape count at beginning of THR for user partition 1 (set to (00) if not present)
119 and 120	Tape count beginning of data for user partition 1 (set to (00) if not present)
121 and 122	Tape count at beginning of TDR for user partition 1 (set to (00) if not present)
123 and 124	Tape count at end of EOD for user partition 1 (set to (00) if not present)
125 and 126	Tape count for Early Warning for user partition 1 (set to (00) if not present)
127 and 128	Tape count for beginning of EOP for user partition 1 (set to (00) if not present)
129 and 130	Tape count for end of EOP for user partition 1 (set to (00) if not present)
131 to 134	Last LBA for user partition 1 (set to (00) if not present)
135 and 136	Last LBA Tape count for user partition 1 (set to (00) if not present)
137 and 138	Last VPA for the system partition
139 to 146	Reserved – shall be set to (00)
147 and 148	Tape count for Early Warning for the system partition
149 and 150	Tape count for beginning of EOP for the system partition
151 and 152	Tape count for end of EOP for the system partition
153 to 1526	Reserved – shall be set to (00)

15.6 End of Data

The EOD shall be written immediately after the TDR in every partition. The EOD area for the system partition shall consist of 290 tracks written at the nominal tape speed, each such track containing EOD control packets, following the TDR. The EOD area for user partitions shall consist on 1 448 tracks, each such track containing EOD control packets, following the TDR for that partition. The data area may be appended as specified in 12.3.

15.7 End of Partition (EOP)

The EOP is the virtual end point, identified by the Tape count (see annex J), of the partition and prevents data in one partition from overwriting the next partition.

© ISO/IEC 2001 – All rights reserved
Copyright International Organization for Standardization
Provided by IHS under license with ISO
No reproduction or networking permitted without license from IHS
Not for Resale

Annex A
(normative)

Measurement of Light Transmittance of Tape and Leaders

A.1 Introduction

The following description outlines the general principle of the measuring equipment and measuring method to be applied when measuring the light transmittance of tape.

For the purpose of this International Standard "light transmittance" is defined by convention as the relationship between the reading obtained from the measuring equipment with the test piece inserted and the reading obtained when no test piece is present. The transmittance value is expressed as the percentage ratio of the two readings.

A.2 Description of the measuring equipment

The equipment shall consist of

- the radiation source;
- the radiation receiver;
- the measuring mask;
- the optical path;
- the measuring circuitry.

A.2.1 Radiation source

An infrared light-emitting diode (LED) with the following parameters shall be used:

wavelength at peak emission : 850 nm ± 50 nm
half-power bandwidth : ± 50 nm

A.2.2 Radiation receiver

A flat silicon photo diode shall be used. It shall be operated in the short circuit mode.

A.2.3 Measuring mask

The measuring mask shall have a thickness of 2 mm and a circular aperture of diameter d such that the area is 80 % to 100 % of the active area of the photo diode.

The surface of the mask shall be matt black.

The test piece shall be held firmly against the mask to cover the aperture and to ensure that no ambient light leaks past.

A.2.4 Optical path (figure A.1)

The optical path shall be perpendicular to the mask. The distance from the emitting surface of the LED to the mask shall be

$$L = \frac{d}{2\tan\alpha} \text{ mm}$$

where d is in mm and α is the angle where the relative intensity of the LED is equal to, or greater than, 95 % of the maximum intensity of the optical axis.

A.2.5 Finish

The whole assembly shall be enclosed in a matt black case.

A.2.6 Measuring circuitry (figure A.2)

The components of the measuring circuitry are

E : regulated power supply with variable output voltage
R : current-limiting resistor
LED : light-emitting diode

© ISO/IEC 2001 – All rights reserved

Copyright International Organization for Standardization
Provided by IHS under license with ISO
No reproduction or networking permitted without license from IHS
Not for Resale

Di : silicon photo diode
A : operational amplifier
R_{f0}, R_{f1} : feedback resistors
S : gain switch
V : voltmeter

The forward current of the LED, and consequently its radiation power, can be varied by means of the power supply E.

Di is operating in the short circuit mode.

The output voltage of the operational amplifier is given by

$$V_0 = I_k \times R_f$$

where:

I_k is the short-circuit current of Di.

The output voltage is therefore a linear function of the light intensity.

R_{f0} and R_{f1} shall be low temperature-drift resistors with an accuracy of 1 %. The following ratio applies

$$\frac{R_{f0}}{R_{f1}} = \frac{1}{20}$$

A.3 Measuring method

– Set switch S to position 0.

– With no test piece mounted vary the supply voltage of E until voltmeter V reads full scale (100 %).

– Mount a leader or trailer tape on the mask. The reading of the voltmeter shall be in the range 60 % to 100 %.

– Mount a test piece of magnetic tape on the mask. Set switch S to position 1. Full deflection of the voltmeter now represents a light transmittance of 5 %.

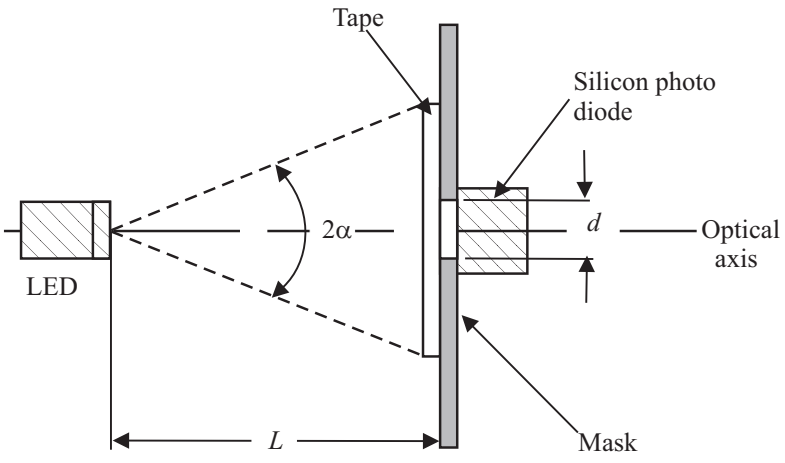

Figure A.1 - Optical arrangement

© ISO/IEC 2001 – All rights reserved
Copyright International Organization for Standardization
Provided by IHS under license with ISO
No reproduction or networking permitted without license from IHS
Not for Resale

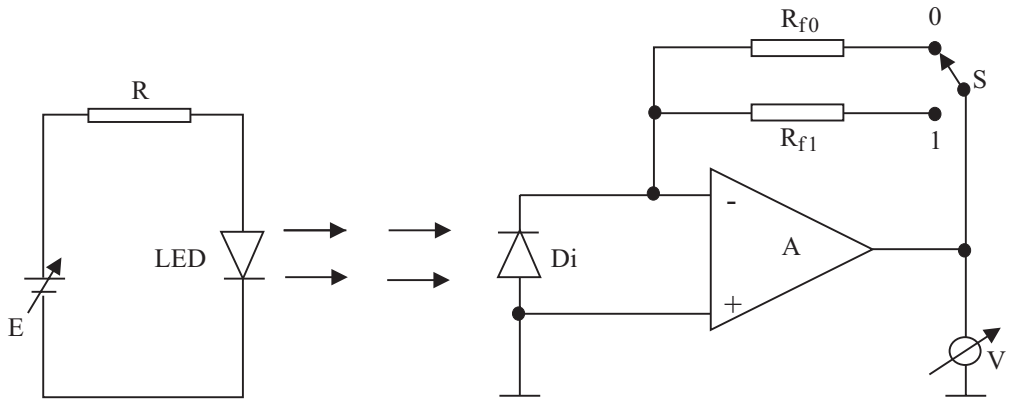

Figure A.2 - Measuring circuitry

--`,,```,,,,````-`-`,,`,,`,`,,`---
© ISO/IEC 2001 - All rights reserved
Copyright International Organization for Standardization
Provided by IHS under license with ISO
No reproduction or networking permitted without license from IHS
Not for Resale

Annex B
(normative)

Packet ECC

The packet ECC check bytes shall be a Reed Solomon code. The packet ECC generator polynomial shall be defined as

$$g(x) = \prod_{i=0}^{1} (x+\alpha^i)$$

The code symbols shall be from the Galois field GF(256).The generator polynomial p(x) for the Galois field shall be defined as follows:

$$p(x) = x^8 + x^4 + x^3 + x^2 + 1$$

The packet ECC check bytes shall be generated by forming an information polynomial from 72 of the packet bytes, multiplying it by x^8, then dividing it by g(x). The resultant remainder shall be the 2 check bytes for the packet ECC.

The information polynomial is formed from the 2 VPA bytes, 2 LPA bytes, 64 data bytes and 4 CRC bytes (72 bytes total). The first byte of the VPA is the highest order coefficient, and the last CRC byte is the lowest order coefficient.

© ISO/IEC 2001 – All rights reserved
Copyright International Organization for Standardization
Provided by IHS under license with ISO
No reproduction or networking permitted without license from IHS
Not for Resale

Annex C
(normative)

Segment ECC

There are 4 types of ECC packets generated for each segment. (Row ECC, Column ECC, Diagonal ECC, and Special ECC). The same algorithm is used in generating these 4 types.

The segment ECC check bytes shall be a Reed Solomon code. The segment ECC generator polynomial shall be defined as

$$g(x) = \prod_{i=0}^{1} (x+\alpha^i)$$

The code symbols shall be from the Galois field GF(256).The generator polynomial p(x) for the Galois field shall be defined as follows:

$$p(x) = x^8 + x^4 + x^3 + x^2 + 1$$

The segment ECC check bytes shall be generated by forming an information polynomial from 32 of the segment bytes, multiplying it by x^8, then dividing it by g(x). The resultant remainder shall be the 2 check bytes for the segment ECC.

The information polynomial is formed from the same-numbered-byte from 32 different packets. For the Row ECC, Column ECC, and Special ECC types, the byte of the lowest numbered packet is the highest order coefficient, and the byte of highest numbered packet is the lowest order coefficient. For the Diagonal ECC, the byte of the packet whose row number is equal to the diagonal number is the highest order coefficient, and the byte of the packet whose row number is equal to the diagonal number minus 1 (mod 32) is the lowest order coefficient.

© ISO/IEC 2001 – All rights reserved

Copyright International Organization for Standardization
Provided by IHS under license with ISO
No reproduction or networking permitted without license from IHS
Not for Resale

Annex D
(normative)

Generation of the Segment Overhead CRCs

The Segment Overhead contains three 8-bit CRC types**:**

1. LBS Boundary Field CRC
2. Main Key Field CRC
3. First LBS Attributes Field CRC

All three types shall be generated using the following generator polynomial

$$g(x) = x^8 + x^7 + x^2 + x^0$$

The CRC shall be generated for a particular Segment Overhead field by forming an information polynomial from the entire overhead field, multiplying it by x^8, then dividing it by $g(x)$. The resultant remainder shall be the 8-bit CRC.

The information polynomial shall be formed from all the bits of the particular segment overhead field as follows. The first (lowest address) byte of the particular Segment Overhead field contains the highest order coefficients and the last (highest address) byte contains the lowest order coefficients. Within each byte, bit 0 shall be the highest order coefficient and bit 7 shall be the lowest order coefficient.

The CRC register is initialised to zero for each Segment Overhead field.

© ISO/IEC 2001 – All rights reserved
Copyright International Organization for Standardization
Provided by IHS under license with ISO
No reproduction or networking permitted without license from IHS
Not for Resale

Annex E
(normative)

Generation of the Segment Data CRC

The Segment Data CRC shall be generated using the following generator polynomial

$$g(x) = x^{32} + x^{26} + x^{23} + x^{22} + x^{16} + x^{12} + x^{11} + x^{10} + x^8 + x^7 + x^5 + x^4 + x^2 + x^1 + x^0$$

The Segment Data CRC shall be generated by forming an information polynomial from the Segment Data Packets, multiplying it by x^{32}, then dividing it by g (x). The resultant remainder shall be the 32-bit Segment Data CRC.

The information polynomial shall be formed from all the bits of the Segment Data Packets as follows. The first byte of packet zero of the segment contains the highest order coefficients and the last byte of the last packet included in the data area of the segment contains the lowest order coefficients. Within each byte, bit 7 shall be the highest order coefficient and bit 0 shall be the lowest order coefficient.

The Segment Data CRC register shall be initialised to 0 for each segment.

© ISO/IEC 2001 – All rights reserved

Copyright International Organization for Standardization
Provided by IHS under license with ISO
No reproduction or networking permitted without license from IHS
Not for Resale

Annex F
(normative)

Generation of the Packet CRC

The Packet CRC shall be generated using the following generator polynomial

$$g(x) = x^{32} + x^{22} + x^{21} + x^{20} + x^{18} + x^{17} + x^{15} + x^{13} + x^{12} + x^{10} + x^{8} + x^{6} + x^{4} + x^{1} + x^{0}$$

The Packet CRC shall be generated by forming an information polynomial from the packet VPA, LPA and data fields, multiplying it by x^{32}, then dividing it by g(x). The resultant remainder shall be the 32-bit Packet CRC.

The information polynomial shall be formed from all the bits of the packet VPA, LPA and data fields as follows. The first byte of the VPA contains the highest order coefficients and the last (64th) byte of the data area contains the lowest order coefficients. Within each byte, bit 7 shall be the highest order coefficient and bit 0 shall be the lowest order coefficient.

The Packet CRC register shall be initialised to 0 for each packet.

© ISO/IEC 2001 – All rights reserved
Copyright International Organization for Standardization
Provided by IHS under license with ISO
No reproduction or networking permitted without license from IHS
Not for Resale

Annex G
(normative)

Representation of 8-bit bytes by 14-bit patterns

To choose a code word from table G.1 for a given symbol, the first criteria (1A & 1B) shall be satisfied. At least one codeword will always satisfy this by definition of table G.1.

1. A) The end Digital Sum Value (DSV) shall be –2, 0 or +2 and

   B) The junction with the prior code word must not produce a run length violation. Specifically, the last 6 bits of the prior code word adjacent with 2 bits of the new code word shall not have a single isolated one (or zero) or a run of 8 ones (or zeroes)

If only one codeword satisfies step 1 above, then that is the codeword to use for that symbol. If there are several possible codewords that satisfy step 1 above, the following steps are taken:

2. The codeword with the greatest number of bit transitions is chosen. The last bit of the prior codeword is considered in counting the number of transitions.

   If more than one codeword is still left after step two then Step 3 is taken.

3. If more than one codeword results after step 2, then any codeword which results in an end DSV of zero is chosen. If more than one codeword satisfies this, then the codewords are resolved as follows: The codeword with an MSB of one is chosen. If the codewords have the same MSB then the one with the most negative Code Digital Sum (CDS) is chosen.

4. If no codewords satisfy step 3, then the results of Step 2 are resolved as follows: The codeword with an MSB of one is chosen. If the codewords have the same MSB then the one with the most negative Code Digital Sum (CDS) is chosen.

In the following table (31) to (7F), (A1) to (C5), (DA) to (E9) and (F4) to (FD) have four codewords and all other values have two codewords.

--`,,```,,,,````-`-`,,`,,`,`,,`---

© ISO/IEC 2001 – All rights reserved

Copyright International Organization for Standardization
Provided by IHS under license with ISO
No reproduction or networking permitted without license from IHS
Not for Resale

Table G.1 – 8-bit to 14-bit conversion

Byte (dec)	Byte (hex)	Table 1 Pattern	Table 2 Pattern	Table 3 Pattern	Table 4 Pattern
0	(00)	01111110000001	10000001111110		
1	(01)	01111100110000	10000011001111		
2	(02)	01111100011000	10000011100111		
3	(03)	01111100001100	10000011110011		
4	(04)	01111100000110	10000011111001		
5	(05)	01111100000011	10000011111100		
6	(06)	01111001110000	10000110001111		
7	(07)	01111001100001	10000110011110		
8	(08)	01111000111000	10000111000111		
9	(09)	01111000110001	10000111001110		
10	(0A)	01111000011100	10000111100011		
11	(0B)	01111000011001	10000111100110		
12	(0C)	01111000001110	10000111110001		
13	(0D)	01111000000111	10000111111000		
14	(0E)	01110011110000	10001100001111		
15	(0F)	01110011100001	10001100011110		
16	(10)	01110011001100	10001100110011		
17	(11)	01110011000110	10001100111001		
18	(12)	01110011000011	10001100111100		
19	(13)	01110001111000	10001110000111		
20	(14)	01110001110001	10001110001110		
21	(15)	01110001100110	10001110011001		
22	(16)	01110001100011	10001110011100		
23	(17)	01110000111100	10001111000011		
24	(18)	01110000111001	10001111000110		
25	(19)	01110000110011	10001111001100		
26	(1A)	01110000011110	10001111100001		
27	(1B)	01110000001111	10001111110000		
28	(1C)	01100111110000	10011000001111		
29	(1D)	01100111100001	10011000011110		
30	(1E)	01100111001100	10011000110011		
31	(1F)	01100111000110	10011000111001		
32	(20)	01100111000011	10011000111100		
33	(21)	01100110011100	10011001100011		
34	(22)	01100110011001	10011001100110		
35	(23)	01100110001110	10011001110001		
36	(24)	01100110000111	10011001111000		
37	(25)	01100011111000	10011100000111		
38	(26)	01100011110001	10011100001110		
39	(27)	01100011100110	10011100011001		
40	(28)	01100011100011	10011100011100		

--`,,```,,,,````-`-`,,`,,`,`,,`---

© ISO/IEC 2001 – All rights reserved

Copyright International Organization for Standardization
Provided by IHS under license with ISO
No reproduction or networking permitted without license from IHS

Not for Resale

Byte (dec)	Byte (hex)	Table 1 Pattern	Table 2 Pattern	Table 3 Pattern	Table 4 Pattern
41	(29)	01100011001110	10011100110001		
42	(2A)	01100011000111	10011100111000		
43	(2B)	01100001111100	10011110000011		
44	(2C)	01100001111001	10011110000110		
45	(2D)	01100001110011	10011110001100		
46	(2E)	01100001100111	10011110011000		
47	(2F)	01100000111110	10011111000001		
48	(30)	01100000011111	10011111100000		
49	(31)	01111111001100	10000000110011	01111100000001	10000011111110
50	(32)	01111001100000	10000110011111	01111111000110	10000000111001
51	(33)	01111000110000	10000111001111	01111111000011	10000000111100
52	(34)	01111000011000	10000111100111	01111110011100	10000001100011
53	(35)	01111110011001	10000001100110	01111000001100	10000111110011
54	(36)	01111000000110	01111110001110	10000001110001	10000111111001
55	(37)	01111110000111	10000001111000	01111000000011	10000111111100
56	(38)	01110011100000	10001100011111	01111100111100	10000011000011
57	(39)	01110011000001	10001100111110	01111100111001	10000011000110
58	(3A)	01111100110011	10000011001100	01110001110000	10001110001111
59	(3B)	01110001100001	10001110011110	01111100011110	10000011100001
60	(3C)	01110000111000	10001111000111	01111100001111	10000011110000
61	(3D)	01110000110001	10001111001110	01111001111100	10000110000011
62	(3E)	01111001111001	10000110000110	01110000011100	10001111100011
63	(3F)	01111001110011	10000110001100	01110000011001	10001111100110
64	(40)	01111001100111	10000110011000	01110000001110	10001111110001
65	(41)	01111000111110	10000111000001	01110000000111	10001111111000
66	(42)	01100111100000	10011000011111	01111000011111	10000111100000
67	(43)	01100111000001	10011000111110	01110011111100	10001100000011
68	(44)	01100110011000	10011001100111	01110011111001	10001100000110
69	(45)	01100110001100	10011001110011	01110011110011	10001100001100
70	(46)	01100110000110	10011001111001	01110011100111	10001100011000
71	(47)	01110011001111	10001100110000	01100110000011	10011001111100
72	(48)	01100011110000	10011100001111	01110001111110	10001110000001
73	(49)	01100011100001	10011100011110	01110000111111	10001111000000
74	(4A)	01100011001100	10011100110011	01100111111100	10011000000011
75	(4B)	01100011000110	10011100111001	01100111111001	10011000000110
76	(4C)	01100011000011	01100111110011	10011000001100	10011100111100
77	(4D)	01100111100111	10011000011000	01100001111000	10011110000111
78	(4E)	01100001110001	10011110001110	01100111001111	10011000110000
79	(4F)	01100001100110	10011110011001	01100110011111	10011001100000
80	(50)	01100001100011	10011110011100	01100011111110	10011100000001
81	(51)	01100000111100	10011111000011	01111111000001	10000000111110
82	(52)	01100000111001	10011111000110	01111110011000	10000001100111

--`,,```,,,,````-`-`,,`,,`,`,,`---

© ISO/IEC 2001 – All rights reserved

Copyright International Organization for Standardization
Provided by IHS under license with ISO
No reproduction or networking permitted without license from IHS
Not for Resale

Byte (dec)	Byte (hex)	Table 1 Pattern	Table 2 Pattern	Table 3 Pattern	Table 4 Pattern
83	(53)	01100000110011	10011111001100	01111110001100	10000001110011
84	(54)	01100000011110	01111110000110	10000001111001	10011111100001
85	(55)	01111110000011	10000001111100	01100000001111	10011111110000
86	(56)	01110000110000	01111100111000	10000011000111	10001111001111
87	(57)	01111100110001	10000011001110	01110000011000	10001111100111
88	(58)	01111100011100	10000011100011	01110000001100	10001111110011
89	(59)	01111100011001	10000011100110	01100110000001	10011001111110
90	(5A)	01100011000001	10011100111110	01111100001110	100000111100001
91	(5B)	01100001110000	10011110001111	01111100000111	10000011111000
92	(5C)	01100001100001	10011110011110	01111001111000	10000110000111
93	(5D)	01111001110001	10000110001110	01100000111000	10011111000111
94	(5E)	01111001100110	10000110011001	01100000110001	10011111001110
95	(5F)	01111001100011	10000110011100	01100000011100	10011111100011
96	(60)	01100000011001	10011111100110	01111000111100	10000111000011
97	(61)	01111000111001	10000111000110	00111000011000	11000111100111
98	(62)	01111000110011	10000111001100	00111000001100	11000111110011
99	(63)	01111000011110	10000111100001	00111111000000	11000000111111
100	(64)	01111000001111	10000111110000	00111110000001	11000001111110
101	(65)	00111100110000	11000011001111	01110011111000	10001100000111
102	(66)	01110011110001	10001100001110	00111100011000	11000011100111
103	(67)	01110011100110	10001100011001	00111100001100	11000011110011
104	(68)	01110011100011	10001100011100	00111100000110	11000011111001
105	(69)	01110011001110	10001100110001	00111100000011	11000011111100
106	(6A)	01110011000111	10001100111000	00111001110000	11000110001111
107	(6B)	00111001100001	11000110011110	01110001111100	10001110000011
108	(6C)	01110001111001	10001110000110	00111000111000	11000111000111
109	(6D)	01110001110011	10001110001100	00111000110001	11000111001110
110	(6E)	01110001100111	10001110011000	00111000011100	11000111100011
111	(6F)	00111000011001	11000111100110	01110000111110	10001111000001
112	(70)	00111000001110	11000111110001	01110000011111	10001111100000
113	(71)	01100111111000	10011000000111	00111000000111	11000111111000
114	(72)	01100111110001	10011000001110	00110011110000	11001100001111
115	(73)	01100111100110	10011000011001	00110011100001	11001100011110
116	(74)	11001100110011	00110011001100	01100111100011	10011000011100
117	(75)	00110011000110	11001100111001	01100111001110	10011000110001
118	(76)	01100111000111	10011000111000	00110011000011	11001100111100
119	(77)	01100110011110	10011001100001	00110001111000	11001110000111
120	(78)	00110001110001	11001110001110	01100110001111	10011001110000
121	(79)	00110001100110	11001110011001	01100011111100	10011100000011
122	(7A)	00110001100011	11001110011100	01100011111001	10011100000110
123	(7B)	01100011110011	10011100001100	00110000111100	11001111000011
124	(7C)	01100011100111	10011100011000	00110000111001	11001111000110

Copyright International Organization for Standardization
Provided by IHS under license with ISO
No reproduction or networking permitted without license from IHS
Not for Resale
© ISO/IEC 2001 – All rights reserved

Byte (dec)	Byte (hex)	Table 1 Pattern	Table 2 Pattern	Table 3 Pattern	Table 4 Pattern
125	(7D)	01100011001111	10011100110000	00110000110011	11001111001100
126	(7E)	00110000011110	11001111100001	01100001111110	10011110000001
127	(7F)	00110000001111	01100000111111	10011111000000	11001111110000
128	(80)	00111111100000	11000000011111		
129	(81)	00111111000001	11000000111110		
130	(82)	00111110011000	11000001100111		
131	(83)	00111110001100	11000001110011		
132	(84)	00111110000110	11000001111001		
133	(85)	00111110000011	11000001111100		
134	(86)	00111100111000	11000011000111		
135	(87)	00111100110001	11000011001110		
136	(88)	00111100011100	11000011100011		
137	(89)	00111100011001	11000011100110		
139	(8A)	00111100001110	11000011110001		
139	(8B)	00111100000111	11000011111000		
140	(8C)	00111001111000	11000110000111		
141	(8D)	00111001110001	11000110001110		
142	(8E)	00111001100110	11000110011001		
143	(8F)	00111001100011	11000110011100		
144	(90)	00111000111100	11000111000011		
145	(91)	00111000111001	11000111000110		
146	(92)	00111000110011	11000111001100		
147	(93)	00111000011110	11000111100001		
148	(94)	00111000001111	11000111110000		
149	(95)	00110011111000	11001100000111		
150	(96)	00110011110001	11001100001110		
151	(97)	00110011100110	11001100011001		
152	(98)	00110011100011	11001100011100		
153	(99)	00110011001110	11001100110001		
154	(9A)	00110011000111	11001100111000		
155	(9B)	00110001111100	11001110000011		
156	(9C)	00110001111001	11001110000110		
157	(9D)	11001110001100	00110001110011		
158	(9E)	11001110011000	00110001100111		
159	(9F)	00110000111110	11001111000001		
160	(A0)	00110000011111	11001111100000		
161	(A1)	00110011000001	11001100111110	00111111100001	11000000011110
162	(A2)	00110001100001	11001110011110	00111111001100	11000000110011
163	(A3)	00110000111000	11001111000111	00111111000110	11000000111001
164	(A4)	00110000110001	11001111001110	00111111000011	11000000111100
165	(A5)	00110000011100	11001111100011	00111110011100	11000001100011
166	(A6)	00110000011001	00111110011001	11000001100110	11001111100110

© ISO/IEC 2001 – All rights reserved

Copyright International Organization for Standardization
Provided by IHS under license with ISO
No reproduction or networking permitted without license from IHS
Not for Resale

Byte (dec)	Byte (hex)	Table 1 Pattern	Table 2 Pattern	Table 3 Pattern	Table 4 Pattern
167	(A7)	00111110001110	11000001110001	00011110000001	11100001111110
168	(A8)	00011100011000	11100011100111	00111110000111	11000001111000
169	(A9)	00011100001100	11100011110011	00111100111100	11000011000011
170	(AA)	00111100111001	11000011000110	00011100000011	11100011111100
171	(AB)	00011001100001	11100110011110	00111100110011	11000011001100
172	(AC)	00011000111000	11100111000111	00111100011110	11000011100001
173	(AD)	00011000110001	11100111001110	00111100001111	11000011110000
174	(AE)	00011000011100	11100111100011	00111001111100	11000110000011
175	(AF)	00011000011001	11100111100110	00111001111001	11000110000110
176	(B0)	00111001110011	11000110001100	00011000000111	11100111111000
177	(B1)	00111001100111	11000110011000	00011111100000	11100000011111
178	(B2)	00111000111110	11000111000001	00011111000001	11100000111110
179	(B3)	00011110011000	11100001100111	00111000011111	11000111100000
180	(B4)	00011110001100	11100001110011	00110011111100	11001100000011
181	(B5)	00110011111001	11001100000110	00011110000110	11100001111001
182	(B6)	00110011110011	11001100001100	00011110000011	11100001111100
183	(B7)	00110011100111	11001100011000	00011100111000	11100011000111
184	(B8)	11100011001110	00011100110001	00110011001111	11001100110000
185	(B9)	11100011100011	00011100011100	00110001111110	11001110000001
186	(BA)	00011100011001	11100011100110	00110000111111	11001111000000
187	(BB)	00011100001110	11100011110001	00111111100110	11000000011001
188	(BC)	00011100000111	11100011111000	00111111100011	11000000011100
189	(BD)	00011001111000	11100110000111	00111111001110	11000000110001
190	(BE)	00011001110001	11100110001110	00111111000111	11000000111000
191	(BF)	00011001100110	11100110011001	00111110011110	11000001100001
192	(C0)	00011001100011	11100110011100	00111110001111	11000001110000
193	(C1)	00011000111100	11100111000011	00111100111110	11000011000001
194	(C2)	00011000111001	11100111000110	00111100011111	11000011100000
195	(C3)	00011000110011	11100111001100	00111001111110	11000110000001
196	(C4)	00011000011110	11100111100001	00111000111111	11000111000000
197	(C5)	00011000001111	11100111110000	00110011111110	11001100000001
198	(C6)	00011111110000	11100000001111		
199	(C7)	00011111100001	11100000011110		
200	(C8)	00011111001100	11100000110011		
201	(C9)	00011111000110	11100000111001		
202	(CA)	00011111000011	11100000111100		
203	(CB)	00011110011100	11100001100011		
204	(CC)	00011110011001	11100001100110		
205	(CD)	00011110001110	11100001110001		
206	(CE)	00011110000111	11100001111000		
207	(CF)	00011100111100	11100011000011		
208	(D0)	00011100111001	11100011000110		

© ISO/IEC 2001 – All rights reserved
Copyright International Organization for Standardization
Provided by IHS under license with ISO
No reproduction or networking permitted without license from IHS
Not for Resale

Byte (dec)	Byte (hex)	Table 1 Pattern	Table 2 Pattern	Table 3 Pattern	Table 4 Pattern
209	(D1)	11100011001100	00011100110011		
210	(D2)	00011100011110	11100011100001		
211	(D3)	00011100001111	11100011110000		
212	(D4)	00011001111100	11100110000011		
213	(D5)	00011001111001	11100110000110		
214	(D6)	11100110001100	00011001110011		
215	(D7)	00011001100111	11100110011000		
216	(D8)	00011000111110	11100111000001		
217	(D9)	00011000011111	11100111100000		
218	(DA)	00001110000011	11110001111100	00011111110001	11100000001110
219	(DB)	00011111100110	11100000011001	00001100000111	11110011111000
220	(DC)	00011111100011	11100000011100	00001111110000	11110000001111
221	(DD)	00011111001110	11100000110001	00001111100001	11110000011110
222	(DE)	00001111001100	00001111001100	00011111000111	11100000111000
223	(DF)	00001111000110	11110000111001	00011110011110	11100001100001
224	(E0)	00001111000011	11110000111100	00011110001111	11100001110000
225	(E1)	00001110011100	11110001100011	00011100111110	11100011000001
226	(E2)	00001110011001	11110001100110	00011100011111	11100011100000
227	(E3)	00001110001110	11110001110001	00011001111110	11100110000001
228	(E4)	00001110000111	11110001111000	00011000111111	11100111000000
229	(E5)	00001100111100	11110011000011	00011111110011	11100000001100
230	(E6)	00001100111001	11110011000110	00011111100111	11100000011000
231	(E7)	00001100110011	11110011001100	00011111001111	11100000110000
232	(E8)	00001100011110	11110011100001	00011110011111	11100001100000
233	(E9)	00001100001111	11110011110000	00011100111111	11100011000000
234	(EA)	00001111111000	11110000000111		
235	(EB)	00001111110001	11110000001110		
236	(EC)	00001111100110	11110000011001		
237	(ED)	00001111100011	11110000011100		
238	(EE)	00001111001110	11110000110001		
239	(EF)	11110000111000	00001111000111		
240	(F0)	00001110011110	11110001100001		
241	(F1)	00001110001111	11110001110000		
242	(F2)	00001100111110	11110011000001		
243	(F3)	00001100011111	11110011100000		
244	(F4)	00001111111001	11110000000110	00000111111000	11111000000111
245	(F5)	00000111110001	11111000001110	00001111110011	11110000001100
246	(F6)	00000111100110	11111000011001	00001111100111	11110000011000
247	(F7)	00000111100011	11111000011100	00001111001111	11110000110000
248	(F8)	00000111001110	11111000110001	00001110011111	11110001100000
249	(F9)	00000111000111	11111000111000	00001100111111	11110011000000
250	(FA)	00000110011110	11111001100001	00000111111100	11111000000011

© ISO/IEC 2001 – All rights reserved

Copyright International Organization for Standardization
Provided by IHS under license with ISO
No reproduction or networking permitted without license from IHS
Not for Resale

Byte (dec)	Byte (hex)	Table 1 Pattern	Table 2 Pattern	Table 3 Pattern	Table 4 Pattern
251	(FB)	00000110001111	11111001110000	00000111111001	11111000000110
252	(FC)	11111000001100	00000111110011		
253	(FD)	00000111100111	11111000011000		
254	(FE)	00000111001111	11111000110000		
255	(FF)	00000110011111	11111001100000		

Copyright International Organization for Standardization
Provided by IHS under license with ISO
No reproduction or networking permitted without license from IHS
© ISO/IEC 2001 – All rights reserved
Not for Resale

Annex H
(normative)

Measurement of bit shift

H.1 Requirements for recording

The equipment normally used for recording interchange cartridges shall be used for recording the tape under test.

The tape shall be written in any mode compatible with system operation.

H.2 Requirements for reading

There are no absolute requirements on the output voltage from the read head. However, the head design, the rotary transformer, the pre-amplifier, and the head to tape speed shall be chosen to avoid problems from low signal-to-noise ratios. This test is performed in the read-after-while mode.

Read Head

Gap length	0,25 μm ± 0,03 μm
Track width	9,10 μm ± 1,10 μm
Positive azimuth	$20{,}00^{o} \pm 0{,}16^{o}$
Negative azimuth	$-20{,}00^{o} \pm 0{,}16^{o}$

H.3 Measurement

The average bit cell length L is obtained from any two reference zero crossings (RZC) located on either side of the test zero crossing (TZC). A reference zero crossing is a ONE zero crossing with at least two adjacent transitions on each side recorded at the maximum physical recording density. The RZCs shall not be more than 40 bit cells apart in order to keep the maximum error due to the rate of change below 2 %.

The requirement for bit shift specified in 13.2 shall be met when any data pattern has been recorded per annex G.

H.4 Data Analysis

Where: RZC is a reference zero crossing

TZC is the test zero crossing
P_n is the position of the n-th ONE zero crossing

If n is the number of bit cells between reference zero crossings, the average bit cell length is

$$L = \frac{P_3 - P_1}{n}$$

If there are m bit intervals between the first reference zero crossing and the test zero crossing then:

$$\text{Bit shift} = \frac{\left| mL - (P_2 - P_1) \right|}{L} x\ 100\%$$

© ISO/IEC 2001 – All rights reserved

Copyright International Organization for Standardization
Provided by IHS under license with ISO
No reproduction or networking permitted without license from IHS
Not for Resale

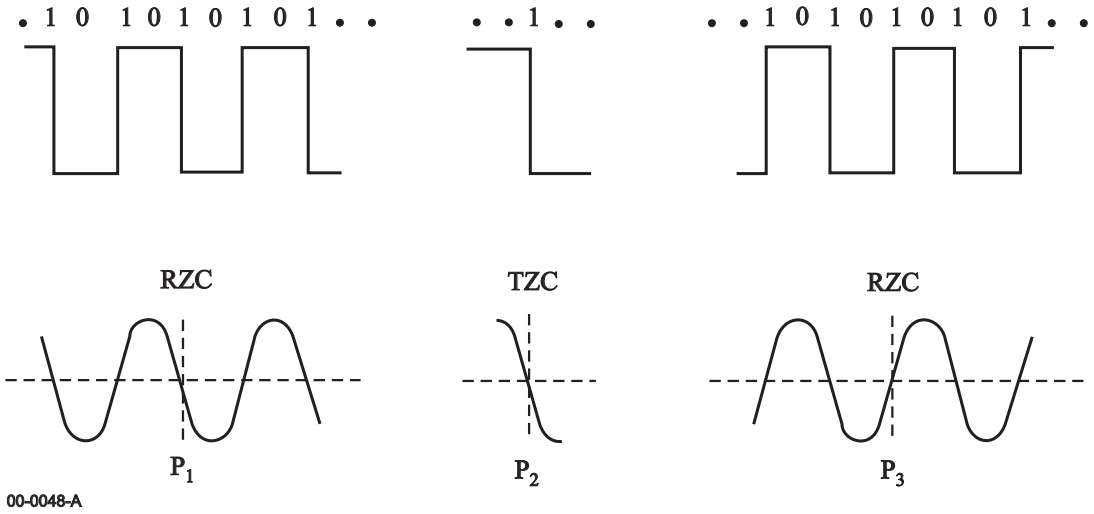

Figure H.1 - Measurement of waveform

--`,,```,,,,````-`-`,,`,,`,`,,`---

© ISO/IEC 2001 – All rights reserved
Copyright International Organization for Standardization
Provided by IHS under license with ISO
No reproduction or networking permitted without license from IHS
Not for Resale

Annex J
(normative)

Tape Count

A Tape Count shall be used to indicate the location of various elements of the VXA-1 format. The elements that have a Tape Count associated with them are:

- Control Packet
- User partition
- System partition
- THR
- Start of user data
- End of Data (EOD)
- TDR
- Early warning
- End of Partition (EOP)
- Last LBA

Each Type of tape shall be assigned a beginning Tape Count value at BOT and a maximum Tape Count value that represents a virtual EOT. The Tape Count value shall increment by 1 as the tape moves from the supply reel to the take-up reel. The Tape Count value shall decrement by 1 as the tape moves from the take-up reel to the supply reel.

The following fixed tape count values are used in the VXA-1 format.

Table J.1 - Fixed Tape count values

	Type A (170 m)	Type B (107 m)	Type C (62 m)
Tape count value assigned at BOT	(100)	(100)	(100)
Maximum Tape count value	(AD80)	(7DB0)	(5380)
Tape count value between BOT and system partition	(A6)	(AE)	(BB)
Tape count value for system partition data (BOD / TDR / EOD)	(A0)	(A7)	(B0)
Tape count value in Early Warning area	(53)	(53)	(5D)
Tape count values in EOP	(53)	(53)	(5D)
Maximum Tape count values allowed for end of EOP of last partition.	(ACDA)	(7D02)	(52C5)

© ISO/IEC 2001 – All rights reserved

Copyright International Organization for Standardization
Provided by IHS under license with ISO
No reproduction or networking permitted without license from IHS
Not for Resale

Annex K
(informative)

Recommendations for transportation

K.1 Environment

It is recommended that during transportation the cartridges are kept within the following conditions:

Temperature: - 40 °C to 45 °C

Relative humidity: 5 % to 80 %

Maximum wet bulb temperature: 26 °C

There should be no condensation in or on the cartridge.

K.2 Hazards

Transportation of tape cartridges involves three basic potential hazards.

K.2.1 Impact loads and vibrations

The following recommendations should minimise damage to tape cartridges during transportation:

– Avoid mechanical loads that would distort the cartridge shape.

– Avoid dropping the cartridge more than 1,0 m.

– Cartridges should be fitted into a rigid box containing adequate shock-absorbent material.

– The final box should have a clean interior and a construction that provides sealing to prevent the ingress of dirt and water.

– The orientation of the cartridges inside the final box should be such that the axes of the tape reels are horizontal.

– The final box should be clearly marked to indicate its correct orientation.

K.2.2 Extremes of temperature and humidity

Extreme changes in temperature and humidity should be avoided whenever possible. Whenever a cartridge is received it should be conditioned in the operating environment for a period of at least 24 h.

K.2.3 Effects of stray magnetic fields

A nominal spacing of not less than 80 mm should exist between the cartridge and the outer surface of the shipping container to minimise the risk of corruption.

© ISO/IEC 2001 – All rights reserved
Copyright International Organization for Standardization
Provided by IHS under license with ISO
No reproduction or networking permitted without license from IHS
Not for Resale

ICS 35.220.23

Price based on 78 pages

© ISO/IEC 2001 – All rights reserved

--`,,```,,,,````-`-`,,`,,`,`,,`---

Copyright International Organization for Standardization
Provided by IHS under license with ISO
No reproduction or networking permitted without license from IHS

Not for Resale