INTERNATIONAL STANDARD

ISO/IEC 20061

First edition
2001-12-01

Information technology — 12,65 mm wide magnetic tape cassette for information interchange — Helical scan recording — DTF-2

Technologies de l'information — Cassette de bande magnétique de 12,65 mm *de large pour l'échange d'information — Enregistrement par balayage en spirale — DTF-2*

Reference number
ISO/IEC 20061:2001(E)

© ISO/IEC 2001

Copyright International Organization for Standardization
Provided by IHS under license with ISO
No reproduction or networking permitted without license from IHS
Not for Resale

PDF disclaimer

This PDF file may contain embedded typefaces. In accordance with Adobe's licensing policy, this file may be printed or viewed but shall not be edited unless the typefaces which are embedded are licensed to and installed on the computer performing the editing. In downloading this file, parties accept therein the responsibility of not infringing Adobe's licensing policy. The ISO Central Secretariat accepts no liability in this area.

Adobe is a trademark of Adobe Systems Incorporated.

Details of the software products used to create this PDF file can be found in the General Info relative to the file; the PDF-creation parameters were optimized for printing. Every care has been taken to ensure that the file is suitable for use by ISO member bodies. In the unlikely event that a problem relating to it is found, please inform the Central Secretariat at the address given below.

© ISO/IEC 2001

All rights reserved. Unless otherwise specified, no part of this publication may be reproduced or utilized in any form or by any means, electronic or mechanical, including photocopying and microfilm, without permission in writing from either ISO at the address below or ISO's member body in the country of the requester.

ISO copyright office
Case postale 56 • CH-1211 Geneva 20
Tel. + 41 22 749 01 11
Fax + 41 22 749 09 47
E-mail copyright@iso.ch
Web www.iso.ch

Printed in Switzerland

© ISO/IEC 2001 – All rights reserved

Copyright International Organization for Standardization
Provided by IHS under license with ISO
No reproduction or networking permitted without license from IHS
Not for Resale

Contents

Page

Section 1 - General 1

1 Scope 1

2 Conformance 1

2.1 Magnetic tape cassette 1
2.2 Generating system 1
2.3 Receiving system 1

3 Normative references 1

4 Terms and definitions 2

4.1 Absolute block number 2
4.2 a.c. erase 2
4.3 algorithm 2
4.4 Append file 2
4.5 Append volume 2
4.6 Average Signal Amplitude (ASA) 2
4.7 azimuth 2
4.8 back surface 2
4.9 bit cell 2
4.10 block 2
4.11 Block Management Table (BMT) 2
4.12 byte 2
4.13 cassette 2
4.14 compressed data 2
4.15 Control Track 2
4.16 flux transition position 2
4.17 flux transition spacing 2
4.18 Logical track set ID 2
4.19 Logical volume 2
4.20 magnetic tape 2
4.21 Master Standard Reference Tape (MSRT) 2
4.22 physical recording density 2
4.23 Reference Field (RF) 2
4.24 Secondary Standard Reference Tape (SSRT) 2
4.25 Standard Reference Amplitude (SRA) 3
4.26 Standard Reference Current (Ir) 3
4.27 Tape Reference Edge 3
4.28 Test Recording Current (TRC) 3
4.29 track 3
4.30 track angle 3
4.31 Track Set 3
4.32 Typical Field (TF) 3
4.33 word 3

5 Conventions and notations 3

5.1 Representation of numbers 3
5.2 Names 3

6 Acronyms 4

7 Environment and safety 4

© ISO/IEC 2001 – All rights reserved

Copyright International Organization for Standardization
Provided by IHS under license with ISO
No reproduction or networking permitted without license from IHS
Not for Resale

7.1 Testing environment **4**
7.2 Operating environment **4**
7.3 Storage environment **5**
7.4 Transportation **5**
7.5 Safety **5**
7.6 Flammability **5**

Section 2 - Requirements for the case **5**

8 Dimensional and mechanical characteristics of the case **5**

8.1 General **5**
8.2 Type S cassette **5**
8.2.1 Overall dimensions (Figure 3) **6**
8.2.2 Holding areas (Figure 4) **6**
8.2.3 Window **6**
8.2.4 Label areas (Figure 4) **7**
8.2.5 Datum areas and datum holes (Figures 5 and 6) **7**
8.2.6 Support areas (Figure 5) **7**
8.2.7 Guiding grooves (Figures 3 and 6) **8**
8.2.8 Recognition holes (Figures 6 and 7) **9**
8.2.9 Write-inhibit plug (Figure 8) **10**
8.2.10 Pre-positioning surface (Figures 3 and 5) **11**
8.2.11 Cassette lid (Figures 9, 10, 11, 12 and 13) **11**
8.2.12 Cassette reel lock (Figure 13) **12**
8.2.13 Reel access holes (Figure 6) **13**
8.2.14 Reels (Figure 14) **13**
8.2.15 Position of the tape in the case (Figure 16) **14**
8.2.16 Tape path zone (Figures 16 to 18) **14**
8.2.17 Tape access cavity (Figure 19) **15**
8.3 Type L cassette **30**
8.3.1 Overall dimensions (Figure 22) **30**
8.3.2 Holding areas (Figure 23) **30**
8.3.3 Window **31**
8.3.4 Label areas (Figure 23) **31**
8.3.5 Datum areas and datum holes (Figures 24 and 25) **31**
8.3.6 Support areas (Figure 24) **32**
8.3.7 Guiding grooves (Figure 25) **32**
8.3.8 Recognition holes (Figure 26) **33**
8.3.9 Write-inhibit plug (Figure 27) **34**
8.3.10 Pre-positioning surface (Figures 24 and 25) **35**
8.3.11 Cassette lid (Figures 28, 29, 30, 31 and 32) **35**
8.3.12 Cassette reel lock (Figure 32) **36**
8.3.13 Reel access holes (Figure 25) **36**
8.3.14 Reels (Figure 33) **37**
8.3.15 Position of the tape in the case (Figure 35) **38**
8.3.16 Tape path zone (Figures 35 to 37) **38**
8.3.17 Tape access cavity (Figure 38) **39**
8.3.18 Cavity for compatibility with Type S cassette (Figure 39) **40**

Section 3 - Requirements for the unrecorded tape **55**

9 Mechanical, physical and dimensional characteristics of the tape **55**

9.1 Materials **55**
9.2 Tape length **55**
9.3 Tape width **55**
9.4 Width and position of splicing tape **55**
9.5 Discontinuity **55**
9.6 Tape thickness **55**
9.7 Longitudinal curvature **55**
9.8 Out-of-plane distortions **56**

© ISO/IEC 2001 – All rights reserved
Copyright International Organization for Standardization
Provided by IHS under license with ISO
No reproduction or networking permitted without license from IHS
Not for Resale

9.9 Coating adhesion **56**
9.10 Layer-to-layer adhesion **57**
9.11 Tensile strength **57**
9.11.1 Breaking strength **57**
9.11.2 Yield strength **57**
9.11.3 Strength of splice **57**
9.12 Residual elongation **57**
9.13 Electrical resistance of the coated surfaces **57**
9.14 Tape wind **58**

10 Magnetic recording characteristics **58**

10.1 Typical Field (TF1) **58**
10.2 Average Signal Amplitude(ASA) **59**
10.3 Resolution **59**
10.4 Signal-to-noise ratio (S/N) **59**
10.5 Ease of erasure **59**
10.6 Tape quality **59**
10.6.1 Missing pulses **59**
10.6.2 Missing pulse zone **59**
10.7 Inhibitor tape **59**

11 Format for helical tracks **60**

11.1 General description of the write data path (see Figure 42) **60**
11.2 Formation of a Logical Track Set **60**

11.2.1 Types of information track sets **60**
11.2.2 Generation of a Logical Track Set **62**
11.2.3 Subcode data field **62**
11.2.4 Block Management Table (BMT) **66**
11.2.5 Data and information field definitions **66**

11.3 Track Set information **70**

11.3.1 Loading the Product Code Arrays **70**

11.4 Product code array processing **72**

11.4.1 Error correction method **72**
11.4.2 Error correction coding for C1 Parity **72**

11.5 Track assignments **73**

11.5.1 Segments/Sectors (Figure 46) **73**
11.5.2 Sync Blocks (Figure 47) **74**
11.5.3 Track interleave (Figure 48) **74**
11.5.4 Byte interleave across Sync Blocks (Figure 49) **77**
11.5.5 Randomization **77**

11.6 Formation of the contents of a helical track (Figure 50) **78**

11.6.1 Segment/Sector details (Figure 47) **78**
11.6.2 Channel bit coding **79**
11.6.3 Interleaved-NRZ1 (Figure 51) **79**
11.6.4 Tracking Pilot Signals (TPS) **79**

12 Track geometry **79**

12.1 General **79**
12.2 Helically recorded tracks **80**

12.2.1 Location of the tracks **80**
12.2.2 Track width **81**
12.2.3 Track angle **81**
12.2.4 Track pitch **81**
12.2.5 Location of elements in the helical track **82**

© ISO/IEC 2001 – All rights reserved

Copyright International Organization for Standardization
Provided by IHS under license with ISO
No reproduction or networking permitted without license from IHS
Not for Resale

12.2.6 Location of the Data Area Reference Point **82**
12.2.7 Straightness of tracks **82**
12.2.8 Azimuth angles **82**
12.2.9 Tracking Pilot Signals (TPS) **82**
12.2.10 Amplitude of servo signals **82**

12.3 Longitudinal tracks geometry **82**

12.3.1 Control Track **82**
12.3.2 Time Code Track signals recording position **83**

13 Method of recording helical tracks **83**

13.1 Physical recording density **83**
13.2 Record current optimization **83**
13.3 Efficiency of erasure **83**

14 Method of recording longitudinal tracks **83**

14.1 Overview **83**
14.2 Control Track **83**

14.2.1 Signal **83**
14.2.2 Polarity of magnetisation (Figure 54) **83**
14.2.3 Alignment **83**
14.2.4 Read signal amplitude **84**
14.2.5 Quality of the Control Track **84**

14.3 Time Code Track **84**

14.3.1 Method of recording the Time Code Track **84**
14.3.2 Physical recording density **84**
14.3.3 Bit shift **84**
14.3.4 Read signal amplitude **84**
14.3.5 Quality of the Time Code Track **85**

14.4 Format for the Time Code Track **85**

14.4.1 Count bits **85**
14.4.2 Phase bit **85**
14.4.3 Synchronizing pattern **85**
14.4.4 Supplemental Data **85**
14.4.5 Extent of Time Code **85**

Section 5 - Requirements for recorded information **85**

15 Recorded information **85**

15.1 Recording area (Figure 55) **85**
15.2 Magnetic tape layout (Figure 56) **85**

15.2.1 Valid data areas **85**
15.2.2 Invalid data areas **86**

15.3 Physical TSID **86**

15.3.1 Structure surrounding the VSIT area **88**
15.3.2 Structure of the DIT area **88**
15.3.3 Structure of the User Data Area **89**

Section 6 - Write operations **89**

16 Write retry sequence (Figure 58) **89**

17 Append file operation (Figure 59) **90**

17.1 Append volume **90**
17.2 Append write (Figure 60) **90**
17.3 Overwrite (Figure 61) **91**

© ISO/IEC 2001 – All rights reserved
Copyright International Organization for Standardization
Provided by IHS under license with ISO
No reproduction or networking permitted without license from IHS
Not for Resale

17.4 File extension (Figure 62) **92**

Annexes

A - Measurement of Signal-to-Noise Ratio **94**

B - Representation 8/9 coding patterns **95**

C - Recommendations for transportation **99**

D - Inhibitor tape **100**

--`,,```,,,,````-`-`,,`,,`,`,,`---

© ISO/IEC 2001 – All rights reserved

Copyright International Organization for Standardization
Provided by IHS under license with ISO
No reproduction or networking permitted without license from IHS
Not for Resale

Foreword

ISO (the International Organization for Standardization) and IEC (the International Electrotechnical Commission) form the specialized system for worldwide standardization. National bodies that are members of ISO or IEC participate in the development of International Standards through technical committees established by the respective organization to deal with particular fields of technical activity. ISO and IEC technical committees collaborate in fields of mutual interest. Other international organizations, governmental and non-governmental, in liaison with ISO and IEC, also take part in the work. In the field of information technology, ISO and IEC have established a joint technical committee, ISO/IEC JTC 1.

International Standards are drafted in accordance with the rules given in the ISO/IEC Directives, Part 3.

The main task of the joint technical committee is to prepare International Standards. Draft International Standards adopted by the joint technical committee are circulated to national bodies for voting. Publication as an International Standard requires approval by at least 75 % of the national bodies casting a vote.

Attention is drawn to the possibility that some of the elements of this International Standard may be the subject of patent rights. ISO and IEC shall not be held responsible for identifying any or all such patent rights.

ISO/IEC 20061 was prepared by ECMA (as Standard ECMA-315) and was adopted, under a special “fast-track procedure”, by Joint Technical Committee ISO/IEC JTC 1, *Information technology*, in parallel with its approval of national bodies of ISO and IEC.

Annexes A and B form a normative part of this International Standard. Annexes C and D are for information only.

© ISO/IEC 2001 – All rights reserved
Copyright International Organization for Standardization
Provided by IHS under license with ISO
No reproduction or networking permitted without license from IHS
Not for Resale

Information technology — 12,65 mm wide magnetic tape cassette for information interchange — Helical scan recording — DTF-2

Section 1 - General

1 Scope

This International Standard specifies the physical and magnetic characteristics of magnetic tape cassettes, using magnetic tape 12,65 mm wide so as to provide physical interchange of such cassettes between drives. It also specifies the quality of the recorded signals, the recording method and the recorded format, called Digital Tape Format-2 (DTF-2), thereby allowing data interchange between drives by means of such cassettes. The format supports variable length Logical Records, high-speed search, and the use of a registered algorithm for data compression.

This International Standard specifies two sizes of cassette. For the purposes of this International Standard the larger cassette is referred to as Type L, and the smaller as Type S.

Together with a standard for volume and file structure, e.g. International Standard ISO 1001, this International Standard provides for full data interchange between data processing systems.

2 Conformance

2.1 Magnetic tape cassette

A claim of conformance with this International Standard shall specify the Type of cassette. It shall be in conformance with this International Standard if:

– the case and unrecorded tape meet all the requirements of clause 8 to 10 for that Type

– the recording on the tape meets the requirements of clauses 11 to 17

2.2 Generating system

A claim of conformance with this International Standard shall specify which Type(s) of cassette is (are) supported. A system generating a magnetic tape cassette for interchange shall be in conformance with this International Standard if all the recordings that it makes, meet the mandatory requirements of this International Standard. A claim of conformance with this International Standard shall state whether or not one, or more, registered algorithm(s) is (are) implemented and, if so, the registered number(s) of (all) the implemented algorithm(s).

2.3 Receiving system

A claim of conformance with this International Standard shall specify which Type(s) of cassette is (are) supported. A system receiving a magnetic tape cassette for interchange shall be in conformance with this International Standard if it is able to handle any recording made on the tape according to this International Standard, and a claim of conformance shall state whether or not one, or more, registered algorithm(s) is (are) implemented and, if so, the registered number(s) of (all) the implemented algorithm(s).

3 Normative references

The following normative documents contain provisions which, through reference in this text, constitute provisions of this International Standard. For dated references, subsequent amendments to, or revisions of, any of these publications do not apply. However, parties to agreements based on this International Standard are encouraged to investigate the possibility of applying the most recent editions of the normative documents indicated below. For undated references, the latest edition of the normative document referred to applies. Members of ISO and IEC maintain registers of currently valid International Standards.

ISO 527-3:1995, *Plastics — Determination of tensile properties — Part 3: Test conditions for films and sheets*

ISO 1001:1986, *Information processing — File structure and labelling of magnetic tapes for information interchange*

ISO/IEC 11576:1994, *Information technology — Procedure for the registration of algorithms for the lossless compression of data*

--`,,```,,,,````-`-`,,`,,`,`,,`---

© ISO/IEC 2001 – All rights reserved

Copyright International Organization for Standardization
Provided by IHS under license with ISO
No reproduction or networking permitted without license from IHS
Not for Resale

SMPTE timecode: C98.12 : time and control code for video and audio tape for 525/60 television system

JIS-B-7502 Characteristics of plastic goods

4 Terms and definitions

For the purposes of this International Standard, the following terms and definitions apply.

4.1 Absolute block number: A number N allocated to each block, indicating that the block is the Nth block from the beginning of the Logical volume containing it. The first block is number one.

4.2 a.c. erase: A process of erasure utilizing alternating magnetic fields of decaying intensity.

4.3 algorithm: A set of rules for transforming the logical representation of data.

4.4 Append file: A new file added from the End of Data (EOD) of a Logical volume.

4.5 Append volume: A Logical volume added after the last Logical volume recorded on the cassette.

4.6 Average Signal Amplitude (ASA): The average peak-to-peak value of the signal output of a read head measured over a minimum of 1,40 mm of track, exclusive of missing pulses.

4.7 azimuth: The angular deviation, in degrees of arc, of the recorded flux transitions on a track from the line normal to the track centreline.

4.8 back surface: The surface of the tape opposite to the magnetic coating used to record data.

4.9 bit cell: A distance along the track allocated for the recording of a Channel bit.

4.10 block: A unit of data which is sent to the tape controller when a single write command is executed.

4.11 Block Management Table (BMT): A table included in each Track Set to manage blocks contained in that Track Set.

4.12 byte: An ordered set of bits acted upon as a unit.

4.13 cassette: A case containing magnetic tape stored on twin reels.

4.14 compressed data: A representation of host-transmitted data after transformation by a data compression algorithm.

4.15 Control Track: A track used for recording the servo control signals.

4.16 flux transition position: That point along a track on the magnetic tape that exhibits the maximum free-space flux density normal to the tape surface.

4.17 flux transition spacing: The distance along a track between successive flux transitions.

4.18 Logical track set ID: The track set ID assigned to each track set containing data received from the host.

4.19 Logical volume: A data entity received by the generating system from the host.

4.20 magnetic tape: A tape which will accept and retain the magnetic signals intended for input, output, and storage purposes.

4.21 Master Standard Reference Tape (MSRT): A tape selected as the standard for Signal Amplitude, Reference Field, Resolution and Signal to Noise Ratio (S/N).

Note - The Master Standard Reference Tape has been established at SONY Corporation.

4.22 physical recording density: The number of recorded flux transitions per unit length of track, specified as flux transitions per millimetre (ftpmm).

4.23 Reference Field (RF): The Typical Field of the MSRT. There are two Reference Fields:

RF1 is that for a helically recorded track
RF2 is that for a longitudinally recorded track.

4.24 Secondary Standard Reference Tape (SSRT): A tape the performance of which is known and stated in relation to that of the MSRT.

Note - Secondary Standard Reference Tapes can be ordered under the Part Number SSRT-DTF-1, from the Sony Corporation, Magnetic Product Group, Data Media Sales Division, 6-7-3S Kitashinagawa, Shinagawa-ku, TOKYO 141, Japan. In principle such tapes will be available for a period of 10 years from the publication of the International Standard. However, by agreement between ECMA and Sony Corporation, this period may be shortened or extended to take account of demand for such SSRTs.

It is intended that these SSRTs be used for calibrating tertiary reference tapes for use in routine calibration.

© ISO/IEC 2001 – All rights reserved
Copyright International Organization for Standardization
Provided by IHS under license with ISO
No reproduction or networking permitted without license from IHS
Not for Resale

4.25 Standard Reference Amplitude (SRA): The Average Signal Amplitude derived from the MSRT, using the appropriate Test Recording Current and the appropriate physical recording density. There are three SRAs. SRA1 is derived from a helically recorded track, recorded at 3 201 ftpmm with TRC1. SRA2 is derived from a longitudinally recorded track at 20,75 ftpmm with TRC2. SRA3 is derived from a helically recorded track, recorded at 800,3 ftpmm with TRC1.

4.26 Standard Reference Current (Ir): The current that produces a Reference Field. There are two Irs.

Ir1 is the current that produces RF1 on a helically recorded track.
Ir2 is the current that produces RF2 on a longitudinally recorded track.

4.27 Tape Reference Edge: The lower edge of the tape when the magnetic coating is facing the observer and the supply reel is to the observer's right.

4.28 Test Recording Current (TRC): The current used to record an SRA. There are two Test Recording Currents:

TRC1 is 1,1 times Ir1
TRC2 is 1,0 times Ir2

4.29 track: A narrow, defined area on the tape along which a series of magnetic transitions may be recorded. A track may be parallel to the Tape Reference Edge or at an angle to it.

4.30 track angle: The angle between the centreline of a helically recorded track and the Tape Reference Edge.

4.31 Track Set: A set of four consecutive helical tracks uniquely identified by a track set identification.

4.32 Typical Field (TF): There are two TFs:

In the plot of the ASA against the recording field:

TF1 is the minimum recording field giving an ASA equal to 90 % of the maximum ASA at the physical recording density of 3 201 ftpmm on a helically recorded track.

TF2 is the value of the recording field for which the increase of ASA resulting from an increase of 1 dB of the recording field falls by 0,5 dB at the physical recording density of 20,75 ftpmm on a longitudinally recorded track.

4.33 word: A group (or set) of four 8-bit bytes, numbered 0 to 3, byte 3 being the most significant.

5 Conventions and notations

5.1 Representation of numbers

- A measured value is rounded off to the least significant digit of the corresponding specified value. It implies that a specified value of 1,26 with a positive tolerance of 0,01, and a negative tolerance of 0,02 allows a range of measured values from 1,235 to 1,275.
- Letters and digits in parentheses represent numbers in hexadecimal notation.
- The setting of a bit is denoted by ZERO or ONE.
- Numbers in binary notation and bit combinations are represented by strings of digits 0 and 1. Within such strings, X may be used to indicate that the setting of a bit is not specified within the string.
- Numbers in binary notation and bit combinations are shown as Words with the MSB to the left, and with the msb in each byte to the left.
- Negative values of numbers in binary notion are given in TWOs complement.
- In each field the data is processed so that the MSB is processed first. Within each byte the msb (numbered 7 in an 8-bit byte) is processed first. This order of processing applies also to the data input to the Error Detection and Correction circuits and to their outputs, unless otherwise stated.

5.2 Names

The names of entities, e.g. specific tracks, fields, etc., are given with a capital initial.

© ISO/IEC 2001 – All rights reserved
Copyright International Organization for Standardization
Provided by IHS under license with ISO
No reproduction or networking permitted without license from IHS
Not for Resale

6 Acronyms

ASA	Average Signal Amplitude
CRC	Cyclic Redundancy Check
BMT	Block Management Table
BST	Bad Spot Table
DIT	Directory Information Table
DM	Dummy Track
ECC	Error Correcting Code
EOD	End of Data
FIT	File Information Table
LBOT	Logical Beginning of Tape
LEOT	Logical End of Tape
LIDT	Logical ID Table
lsb	Least Significant Bit
LSB	Least Significant Byte
msb	Most Significant Bit
MSB	Most Significant Byte
MSRT	Master Standard Reference Tape
NEOT	Near End of Tape
PBOT	Physical Beginning of Tape
PEOT	Physical End of Tape
SRA	Standard Reference Amplitude
SSRT	Secondary Standard Reference Tape
TF	Typical Field
TPS	Tracking Pilot Signal
TRC	Test Recording Current
TSID	Track Set Identification
UID	Unique Identifier
UT	Update Table
VEOV	Virtual End of Volume
VIT	Volume Information Table
VSIT	Volume Set Information Table

7 Environment and safety

The conditions specified below refer to ambient conditions immediately surrounding the cassette. Cassettes exposed to environments outside these limits may still be able to function usefully; however, such exposure may cause permanent damage.

7.1 Testing environment

Unless otherwise specified, tests and measurements made on the tape to check the requirements of this Standard shall be made under the following conditions.

temperature	23 °C ± 1 °C
relative humidity	48 % to 52 %
conditioning period before use	24 h min.

7.2 Operating environment

Cassettes used for data interchange shall be operated under the following conditions:

temperature	5 °C to 40 °C
relative humidity	20 % to 80 % non-condensing
wet bulb temperature	26 °C max

The cassette shall be conditioned before use in the operating environment for a time at least equal to the period during which it has been out of the operating environment, up to a maximum of 24 h.

© ISO/IEC 2001 – All rights reserved
Copyright International Organization for Standardization
Provided by IHS under license with ISO
No reproduction or networking permitted without license from IHS
Not for Resale

7.3 Storage environment

The following conditions shall be observed for storage.

temperature: 5 °C to 32 °C

relative humidity: 20 % to 60 %

The stray magnetic field at any point on the tape shall not exceed 4 000 A/m. There shall be no deposit of moisture on or in the cassette.

7.4 Transportation

Recommended limits for the environment to which a cassette may be subjected during transportation, and the precautions to be taken to minimize the possibility of damage, are provided in annex C.

7.5 Safety

The cassette and its components shall satisfy the requirements of ECMA-287 when used in the intended manner or in any foreseeable use in an information processing system.

7.6 Flammability

The tape and the case components shall be made from materials which, when ignited from a match flame, do not continue to burn in a still carbon dioxide atmosphere.

Section 2 - Requirements for the case

8 Dimensional and mechanical characteristics of the case

8.1 General

The case of the cassette shall comprise

- an upper half
- a lower half
- a lid pivotally mounted on the upper half
- a latch mechanism for the lid
- two reels for magnetic tape
- a locking mechanism for the reels
- a write-inhibit mechanism
- recognition holes.

In the drawings, embodiments of the cassettes are shown as examples.

For the Type S cassette the dimensions are referred to three orthogonal Reference Planes X, Y, and Z where

- The three datum areas A, B and C in the bottom side of the case are in Plane Z
- Plane X is perpendicular to Plane Z and intersects the centres of datum holes A and B
- Plane Y is perpendicular to Plane X and Plane Z and intersects the centre of datum hole A.

For the Type L cassette the dimensions are referred to three orthogonal Reference Planes X, Y, and Z where

- The three datum areas E, F and G in the bottom side of the case are in Plane Z
- Plane X is perpendicular to Plane Z and intersects the centres of datum holes E and F
- Plane Y is perpendicular to Plane X and Plane Z and intersects the centre of datum hole E.

Figures 1 to 19 and sub-clause 8.2 define the dimensions of the case and reels for a Type S cassette.

Figures 20 to 39 and sub-clause 8.3 define the dimensions of the case and reels for a Type L cassette.

8.2 Type S cassette

Figure 1 is a perspective view seen from the top.
Figure 2 is a perspective view seen from the bottom.
Figure 3 shows the top side with the lid closed using third angle projection.
Figure 4 shows the top side holding and label areas.
Figure 5 shows the bottom side with the lid removed.

--`,,```,,,,````-`-`,,`,,`,`,,`---
© ISO/IEC 2001 – All rights reserved
Copyright International Organization for Standardization
Provided by IHS under license with ISO
No reproduction or networking permitted without license from IHS
Not for Resale

Figure 6 shows the bottom side with the lid closed.
Figure 7 shows the details of the recognition holes.
Figure 8 shows the details of the write-inhibit plug.
Figure 9 shows the detail of the lid release insertion channel.
Figure 10 shows the lid unlock force direction.
Figure 11 shows the detail of the lid opening insertion channel.
Figure 12 shows the lid opening force direction.
Figure 13 shows the side view with the lid open.
Figure 14 shows the cassette reel.
Figure 15 shows the height of reels upon rotation.
Figure 16 shows the internal tape path.
Figure 17 shows the tape path to measure the extraction force.
Figure 18 shows the tape path to measure the friction torque of the take-up reel.
Figure 19 shows the tape access cavity requirements.

8.2.1 Overall dimensions (Figure 3)

The overall dimensions of the case with the lid in the closed position are defined as follows. The total width of the case shall be

$l_1 = 96{,}0 \text{ mm} \pm 0{,}3 \text{ mm}$

The total length of the case shall be

$l_2 = 156{,}0 \text{ mm} \; {}^{+0{,}2 \text{ mm}}_{-0{,}3 \text{ mm}}$

The distance from the top of the case to the Reference Plane Z shall be

$l_3 = 25{,}0 \text{ mm} \pm 0{,}3 \text{ mm}$

The front-top bevel edge shall start in the top side at a distance

$l_4 = 3{,}0 \text{ mm} \pm 0{,}5 \text{ mm}$ from the front side and shall terminate in the front side at a distance
$l_5 = 5{,}0 \text{ mm} \pm 0{,}5 \text{ mm}$ from the top side

The bottom-front edge of the case shall be rounded with a radius

$r_1 = 1{,}0 \text{ mm} \pm 0{,}1 \text{ mm}$

The distance from the rear side to plane X shall be

$l_6 = 9{,}0 \text{ mm} \; {}^{+0{,}2 \text{ mm}}_{-0{,}1 \text{ mm}}$

The distance from the right side to plane Y shall be

$l_7 = 8{,}0 \text{ mm} \; {}^{+0{,}2 \text{ mm}}_{-0{,}1 \text{ mm}}$

8.2.2 Holding areas (Figure 4)

The holding areas, shown cross-hatched, lie in Plane Z and shall be the areas along which the cassette shall be held down when inserted into the drive. The left and right edge holding areas shall extend from the rear side a distance of

$l_8 = 69{,}4 \text{ mm min.}$

The width of the holding surface along the rear edge shall be

$l_9 = 10{,}2 \text{ mm min.}$

The width of the left and right holding surfaces shall be

$l_{10} = 5{,}7 \text{ mm min.}$

8.2.3 Window

A window may be provided on the top side so that a part of the reels is visible. The window, if provided, shall not extend beyond the height of the cassette and shall not extend beyond the inner edge of the holding areas.

© ISO/IEC 2001 – All rights reserved
Copyright International Organization for Standardization
Provided by IHS under license with ISO
No reproduction or networking permitted without license from IHS
Not for Resale

8.2.4 Label areas (Figure 4)

A portion of the rear side of the cassette and a portion of the top side of the cassette may be used for labels. The position and the size of the labels shall not interfere with the operation or clearance requirement of the cassette component parts. The area used for labels on the top side shall not extend beyond the inner edges of the holding areas.

The position and dimensions of the label area on the rear side are defined as follows.

The distance from the top of the case to the top of the label area, and from the bottom of the label area to Plane Z, shall be

l_{11} = 3,0 mm ± 0,3 mm

The distance from both the left and right sides of the case to the edges of the label area shall be

l_{12} = 7,0 mm ± 0,3 mm

The depth of the top side label depression shall be 0,3 mm max.

The depth of the rear side label depression shall be 0,5 mm ± 0,1 mm.

8.2.5 Datum areas and datum holes (Figures 5 and 6)

The annular datum areas A, B and C shall lie in plane Z and determine the vertical position of the cassette in the drive.

The annular datum area D shall be parallel to datum plane Z and within 0,3 mm of it.

Each datum area shall have a diameter d_1 = 10,0 mm ± 0,1 mm and be concentric with the respective datum hole.

The centres of datum holes A and B lie in plane X.

The centre of datum hole A shall be at the intersection of planes X and Y.

The distance from the centre of the datum hole B to plane Y shall be

l_{13} = 140,0 mm ± 0,3 mm

The distance from the centre of the datum hole C to plane Y shall be

l_{14} = 120,0 mm ± 0,3 mm

The distance from the centre of the datum hole D to plane Y shall be

l_{15} = 20,0 mm ± 0,2 mm

The distance from the centre of the datum holes C and D to plane X shall be

l_{16} = 74,0 mm ± 0,2 mm

The diameter of datum holes A and D shall be

l_{17} = 5,5 mm $^{+0,1\ \text{mm}}_{-0,0\ \text{mm}}$ as shown in section C-C of Figure 6

The depth of all four datum holes shall be

l_{19} = 9 mm min.

The distance across the flats of datum holes B and C shall be l_{17}

The distance of the elongation in datum holes B and C shall be

l_{18} = 8,00 mm ± 0,15 mm as shown in section E-E of Figure 6.

8.2.6 Support areas (Figure 5)

The cassette support areas are shown cross-hatched, in Figure 5. Support areas A, B, C and D shall be coplanar with datum area A, B, C and D, respectively, within ± 0,05 mm.

The areas within 1 mm of the edge of the cassette shall not be included in the support areas and shall be recessed from the support areas.

The dimensions and position of the support areas shall be defined as follows.

The support area surrounding datum hole A shall be defined by

l_{20} = 9,0 mm ± 0,2 mm

© ISO/IEC 2001 – All rights reserved

Copyright International Organization for Standardization
Provided by IHS under license with ISO
No reproduction or networking permitted without license from IHS
Not for Resale

l_{21} = 20,0 mm ± 0,2 mm
l_{22} = 10,00 mm ± 0,15 mm
l_{23} = 0,4 mm ± 0,2 mm

The support area surrounding datum hole B shall be defined by l_{20} , l_{21} and

l_{24} = 130,0 mm ± 0,3 mm
l_{25} = 140,4 mm ± 0,3 mm

The support area surrounding datum hole D shall be defined by

l_{26} = 62,0 mm ± 0,2 mm
l_{27} = 72,3 mm ± 0,3 mm
l_{28} = 80,0 mm ± 0,3 mm
l_{29} = 85,0 mm ± 0,3 mm
l_{30} = 10,00 mm ± 0,15 mm
l_{31} = 40,0 mm ± 0,2 mm

The support area surrounding datum hole C shall be defined by l_{26}, l_{28}, l_{29} and

l_{32} = 68,0 mm $^{+0,2\ mm}_{-0,5\ mm}$
l_{33} = 100,0 mm ± 0,3 mm
l_{34} = 130,0 mm ± 0,3 mm

8.2.7 Guiding grooves (Figures 3 and 6)

The cassette shall be provided with four guiding grooves for correct insertion into the drive.

The distance from Plane X to the rear edge of the guiding groove on the top side shall be

l_{35} = 2,5 mm ± 0,1 mm

The width of top and bottom guiding grooves shall be

l_{36} = 3,0 mm ± 0,1 mm

The distance across the flanged opening at the left and right edges of both the top and bottom guiding grooves shall be

l_{37} = 6,0 mm ± 0,3 mm

The depth of the top and bottom guiding grooves shall be

l_{38} = 1,4 mm min.

The distance from Plane Z to the bottom edge of the right side guiding groove shall be

l_{39} = 11,00 mm $^{+0,15\ mm}_{-0,30\ mm}$

The width of right and left side guiding grooves shall be

l_{40} = 3,0 mm $^{+0,4\ mm}_{-0,1\ mm}$

The distance from Plane Z to the bottom of the right side flanged opening at the front shall be

l_{41} = 9,0 mm ± 0,3 mm

The width of the flanged opening of the right and left guiding grooves at the front shall be

l_{42} = 7,00 mm ± 0,15 mm

The distance from the front along the right and left guiding grooves to the termination of the flanges shall be

l_{43} = 8,00 mm ± 0,15 mm

The depth of the left and right side guiding grooves shall be

l_{44} = 1,1 mm min.

The distance from Plane Z to the bottom of the left flanged opening at the front shall be

l_{45} = 14,00 mm $^{+0,15\ mm}_{-0,30\ mm}$

Copyright International Organization for Standardization
Provided by IHS under license with ISO
No reproduction or networking permitted without license from IHS
Not for Resale
© ISO/IEC 2001 – All rights reserved

The distance from Plane Z to the bottom edge of the left side guiding groove shall be

l_{46} = 12,0 mm ± 0,3 mm

The distance from the top side to the extent of chamfer in the bottom of the top guiding groove on the left and right sides shall be

l_{47} = 1,90 mm ± 0,15 mm

The angle of the chamfer in the bottom of the top guiding groove at the left and right ends shall be

a_1 = 30° ± 3°

The angle of the flange opening of the top guiding groove at both ends shall be

a_2 = 30° ± 3°

8.2.8 Recognition holes (Figures 6 and 7)

There shall be 7 recognition holes numbered 1 to 7.

The position and dimensions of the recognition holes 1 to 6 are as follows.

A line through and locating the centres of holes 6 and 1 shall be

l_{48} = 70,00 mm ± 0,15 mm from Plane Y

The centre of hole 6 shall be located

l_{49} = 48,0 mm ± 0,2 mm from Plane X

The centres of holes 4 and 5 shall be located

l_{50} = 3,40 mm ± 0,05 mm to the left and right of a line through the centres of holes 1 and 6

The location of a line through the centres of hole 4 and 5 shall be a distance

l_{51} = 3,6 mm ± 0,1 mm from the centre of hole 6

Recognition holes 2 and 3 are D shaped with the flats next to hole 1; the flats shall be a distance

l_{52} = 4,00 mm ± 0,05 mm from the centre of hole 1

The distance of a line through the centres of holes 1, 2 and 3 from Plane X shall be

l_{53} = 56,0 mm ± 0,2 mm

The length of the flat of holes 2 and 3 shall be

l_{54} = 3,4 mm $^{+\,0,2\text{ mm}}_{-\,0,0\text{ mm}}$

The distance from the flat to the centre and the radius of holes 2 and 3 shall be

l_{55} = 1,7 mm $^{+\,0,2\text{ mm}}_{-\,0,0\text{ mm}}$

Holes 1, 2 and 3 contain a tab as shown in view Q of Figure 6 in Figure 7.

The distance from the tab surface to the bottom of the cavity behind the tab shall be

l_{56} = 10 mm min. as shown in section F-F in Figure 7.

The depth of holes 4, 5 and 6 shall be

l_{57} = 5 mm min. as shown in section G-G of Figure 7.

The radius of the D holes 2 and 3 shall be

r_2 = 1,7 mm $^{+\,0,2\text{ mm}}_{-\,0,0\text{ mm}}$

The diameter of holes 1, 4, 5 and 6 shall be

d_2 = 3,4 mm $^{+\,0,2\text{ mm}}_{-\,0,0\text{ mm}}$

© ISO/IEC 2001 – All rights reserved

Copyright International Organization for Standardization
Provided by IHS under license with ISO
No reproduction or networking permitted without license from IHS
Not for Resale

Recognition hole 7 is located in the bottom right side of the case shown in view P of Figure 6 in Figure 7.

The distance from Plane Y to the surface of hole 7 nearest to the right edge of the case shall be

l_{58} = 5,8 mm ± 0,2 mm

The distance from Plane Y to the surface of hole 7 farthest from the right edge of the case shall be

l_{59} = 1,6 mm ± 0,1 mm

The distance from Plane X to the surface of hole 7 nearest to the rear edge of the case shall be

l_{60} = 50,0 mm $^{+\,0,5\ \text{mm}}_{-\,0,2\ \text{mm}}$

The distance from Plane X to the surface of hole 7 farthest from the rear edge of the case shall be

l_{61} = 57,00 mm $^{+\,0,35\ \text{mm}}_{-\,0,50\ \text{mm}}$

The surfaces on the case bottom and right side surrounding recognition hole 7 are slightly recessed.
The distance from Plane Y to the edge of the recessed area farthest from the right edge shall be

l_{62} = 0,4 mm ± 0,2 mm

The distance from Plane X to the nearest edge of the recessed area along the right edge of the case shall be

l_{63} = 46,0 mm ± 0,5 mm

The extent of the recessed area along the right edge of the case shall be

l_{64} = 15,0 mm ± 0,5 mm

The inside corners of the recognition hole 7 farthest from the right edge of the case shall have fillets defined by

l_{65} = 1,0 mm ± 0,2 mm as shown in view P of Figure 7.

The depth of the recess below the bottom and right side surfaces shall be

l_{66} = 0,5 mm max.

The depth of recognition hole 7 shall be

l_{67} = 10 mm min.

This International Standard prescribes the following states of these recognition holes.

– Recognition hole 1 shall be closed.
– Recognition hole 2 shall be closed.
– Recognition hole 3 shall be closed.
– Recognition hole 4 shall be open.
– Recognition hole 5 shall be open.
– Recognition hole 6 shall be open.
– Recognition hole 7 shall be open.

Tabs may be used to close the recognition holes. The dimensions of the tabs, if used, shall be as defined in the section F-F of Figure 7. The tabs shall withstand an applied force of 2,0 N max. without being punched out.

The surface of the tabs shall be recessed from the bottom side a distance

l_{68} = 0,3 mm max.

The space around the knockout tab in recognition holes 1, 2 and 3, as viewed in section F-F of Figure 7, shall be

l_{69} = 0,7 mm max.

8.2.9 Write-inhibit plug (Figure 8)

The write-inhibit plug is located on the left side at the bottom of the case as shown in Figure 6, view R.

The distance in Plane Z from Plane X to the near edge of the write-inhibit plug hole shall be

l_{70} = 52,5 mm ± 0,2 mm

--`,,```,,,,````-`-`,,`,,`,`,,`---
© ISO/IEC 2001 – All rights reserved
Copyright International Organization for Standardization
Provided by IHS under license with ISO
No reproduction or networking permitted without license from IHS
Not for Resale

The span of the write-inhibit plug hole shall be

l_{71} = 7,00 mm $^{+\,0,15\ mm}_{-\,0,00\ mm}$ as shown in view R of Figure 8.

The distance on the left side of the case from Plane X to the near edge of the slider opening shall be

l_{72} = 52,8 mm min.

The distance on the left side of the case from Plane X to the far edge of the slider opening shall be

l_{73} = 58,8 mm max.

The distance in Plane Z from Plane Y to the inner side of the write-inhibit plug hole shall be

l_{74} = 141,60 mm ± 0,15 mm

The distance from the inner side of the write inhibit hole to the slide rail shoulder shall be

l_{75} = 5,00 mm $^{+\,0,15\ mm}_{-\,0,00\ mm}$

The distance on the left side from Plane Z to the far edge of the write-inhibit plug detent hole shall be

l_{76} = 9,4 mm max.

The tang on the left side of the body of the write-inhibit plug shall extend

l_{77} = 1,7 mm max.

The surface of the write-inhibit plug, when in the write-enable position, shall be recessed from Plane Z a distance

l_{78} = 0,5 mm max.

When the write-inhibit plug is pushed down, recording on the tape is inhibited.

The distance from Plane Z to the surface of the plug in the write-inhibit position shall be

l_{79} = 4,5 mm min.

The write-inhibit plug shall not be deformed by 0,3 mm or more when a force of 2,0 N is applied to the centre of it. The force required to push down or lift up the write-inhibit plug shall be less than 40 N.

8.2.10 Pre-positioning surface (Figures 3 and 5)

The pre-positioning surfaces are parallel to Plane Y in the front of the bottom side and determine the initial location of the cassette as it is inserted into the drive loading slot.

The distance of the right side pre-position surface from Plane Y shall be

l_{80} = 1,2 mm ± 0,4 mm as shown in Figure 5

The distance of the left side pre-position surface from Plane Y shall be

l_{81} = 137,7 mm ± 0,5 mm

The height of the pre-position surfaces above Plane Z shall be

l_{82} = 3,0 mm ± 0,1 mm as shown in Figure 3

The distance from Plane X to the front of the left and right pre-position surfaces shall be

l_{83} = 87,0 mm $^{+\,0,1\ mm}_{-\,0,2\ mm}$

8.2.11 Cassette lid (Figures 9, 10, 11, 12 and 13)

The cassette shall include a lid for protection of the tape during handling, storage and transportation. The lid shall be automatically locked when the lid is closed and it shall be unlocked when the release pin in the drive is inserted into the channel shown in Figure 9.

The distance from Plane X to the near edge of the lid release insertion channel shall be

l_{84} = 75,0 mm $^{+\,0,0\ mm}_{-\,0,3\ mm}$

© ISO/IEC 2001 – All rights reserved

Copyright International Organization for Standardization
Provided by IHS under license with ISO
No reproduction or networking permitted without license from IHS
Not for Resale

The distance from Plane Y to the far wall of the lid release insertion channel shall be

l_{85} = 141,8 mm min.

The distance from Plane Z to the near wall of the cavity containing the locking mechanism shall be

l_{86} = 2,4 mm max.

The distance from Plane Z to the far wall of the cavity containing the locking mechanism shall be

l_{87} = 5,85 mm min.

The design of the locking mechanism is not specified by this International Standard except that it shall be operated by the release pin in the drive. The lid release mechanism shall be actuated when the drive release pin is in the cross-hatched area shown in section J-J and defined by l_{87} and

l_{88} = 74,2 mm max.
l_{89} = 75,8 mm min.
l_{90} = 3 mm max.

The force needed to unlock the lid shall be less than 1 N in the direction shown by Figure 10.

After the lid is unlocked, the lid shall be open when the lid opening lever in the drive is inserted into the channel shown in Figure 11.

The distance from Plane X to the near end of the lid opening channel shall be

l_{91} = 77,3 mm max.

The distance from Plane Y to the relief edge in the front bottom lid surface shall be

l_{92} = 2,4 mm max.

The distance from Plane Y to the right inside wall of the lid shall be

l_{93} = 5 mm min.

The distance from bottom side of the case to the front bottom edge of the lid shall be

l_{94} = 0,1 mm ± 0,1 mm

The bottom front edge of the lid shall have a flat for the distance defined by

l_{95} = 1,2 mm ± 0,2 mm

The inside corner of the lid shall be rounded with a radius

r_3 = 1,0 mm ± 0,1 mm

The inside front bottom edge of the lid shall be chamfered at an angle defined by

a_3 = 30° ± 3° starting at the flat defined by l_{95}

The force needed to open the lid shall be 1,5 N max. in the direction shown in Figure 12.

The lid rotates around an axis defined in Figure 13 by dimensions

l_{96} = 69,0 mm ± 0,5 mm and
l_{97} = 18,0 mm ± 0,5 mm

The maximum possible lid opening distance shall be

l_{98} = 29 mm min.

8.2.12 Cassette reel lock (Figure 13)

The reels shall be locked when the cassette is removed from the tape drive and shall be unlocked when the cassette is inserted into the drive.

The design of the locking mechanism is not specified by this International Standard except that the reel shall be completely released when the cassette lid is opened a distance from reference plane Z defined by

l_{99} = 23,5 mm max. The minimum distance required to unlock the reels is not specified.

© ISO/IEC 2001 – All rights reserved
Copyright International Organization for Standardization
Provided by IHS under license with ISO
No reproduction or networking permitted without license from IHS
Not for Resale

8.2.13 Reel access holes (Figure 6)

The case shall have two circular reel access holes in the bottom of the case which shall allow penetration of the drive spindles.

The centreline of both reel holes shall be the distance from Plane X defined by

$l_{100} = 31{,}0 \text{ mm} \pm 0{,}2 \text{ mm}$

The distance from Plane Y along the line defined by l_{100} to the centre of the right reel hole shall be

$l_{101} = 32{,}0 \text{ mm} \pm 0{,}2 \text{ mm}$

The distance from Plane Y along the line defined by l_{100} to the centre of the left reel hole shall be

$l_{102} = 108{,}0 \text{ mm} \pm 0{,}2 \text{ mm}$

The diameter of both reel holes shall be

$d_3 = 33 \text{ mm min.}$

8.2.14 Reels (Figure 14)

The reels shall have a spindle-receiving cavity extending from the bottom side, with inward facing gear teeth for engaging the drive gear, and a round upper cylinder to define the axis of rotation precisely.

The diameter of the round upper cylinder in the receiving cavity shall be

$d_4 = 11{,}00 \text{ mm} \; {}^{+\,0{,}15 \text{ mm}}_{-\,0{,}00 \text{ mm}}$

The tops of the inside gear teeth shall lie in a cylinder surface with a diameter defined by

$d_5 = 14{,}0 \text{ mm} \; {}^{+\,0{,}4 \text{ mm}}_{-\,0{,}2 \text{ mm}}$

The base of the inside gear teeth shall lie in a cylinder surface with a diameter defined by

$d_6 = 18{,}0 \text{ mm} \pm 0{,}2 \text{ mm}$

The base surface of the reel is formed by an annular ring with an inside diameter that shall be

$d_7 = 27{,}6 \text{ mm} \pm 0{,}2 \text{ mm}$ and an outside diameter that shall be
$d_8 = 30{,}0 \text{ mm} \pm 0{,}2 \text{ mm}$

The width of the tops of the inside gear teeth shall be

$l_{103} = 2{,}0 \text{ mm} \pm 0{,}5 \text{ mm}$

The distance from the reel base annular ring to the inside lower flange at the tape hub surface shall be

$l_{104} = 3{,}75 \text{ mm} \; {}^{+\,0{,}20 \text{ mm}}_{-\,0{,}10 \text{ mm}}$

The distance between the lower and upper flanges at the tape hub surface shall be

$l_{105} = 13{,}5 \text{ mm} \; {}^{+\,0{,}2 \text{ mm}}_{-\,0{,}5 \text{ mm}}$

The distance from the reel base annular ring to the top of the inside gear teeth base cylinder shall be

$l_{106} = 9{,}00 \text{ mm} \pm 0{,}15 \text{ mm}$

The distance from the reel base annular ring to the start of the round upper cylinder shall be

$l_{107} = 10{,}5 \text{ mm} \pm 0{,}3 \text{ mm}$

The distance from the reel base annular ring to the top of the round upper cylinder shall be

$l_{108} = 15{,}0 \text{ mm} \; {}^{+\,0{,}5 \text{ mm}}_{-\,0{,}0 \text{ mm}}$

The length of the tops of the gear teeth from the top of the inside gear teeth base cylinder shall be

$l_{109} = 6{,}50 \text{ mm} \pm 0{,}15 \text{ mm}$

© ISO/IEC 2001 – All rights reserved

Copyright International Organization for Standardization
Provided by IHS under license with ISO
No reproduction or networking permitted without license from IHS
Not for Resale

The gear teeth side surfaces extend from the base cylinder to the tops cylinder and shall be at an angle with respect to each other defined by

$a_4 = 60° \pm 5°$

The 6 gear teeth shall be spaced around the base cylinder at an angle defined by

$a_5 = 60° \pm 1°$

The reels assembled in a cassette shall rotate freely under the condition described in Figure 15.

The distance from Plane Z to the annular base reel surface which provides free rotation of the reel when the cassette is loaded into a drive shall be

$l_{110} = 2,4\ \text{mm}\ {}^{+0,2\ \text{mm}}_{-0,6\ \text{mm}}$

The reels assembled in a cassette shall be spring-loaded with a force F of 1,5 N ± 0,5 N as shown in Figure 15.

8.2.15 Position of the tape in the case (Figure 16)

Four tape guides define the tape path inside the cassette. Two guides on the left side, one close to the front opening of the case and one close to the supply reel. Two guides on the right side, one close to the front opening of the case and one near to the take-up reel.

The distance from Plane X to a line through the centres of the guides close to the reels shall be

$l_{111} = 69,0\ \text{mm} \pm 0,5\ \text{mm}$

The distance from Plane Y to the centre of the right guide close to the take-up reel shall be

$l_{112} = 12,5\ \text{mm} \pm 0,5\ \text{mm}$

The distance from Plane Y to the centre of the left guide close to the supply reel shall be

$l_{113} = 128,7\ \text{mm} \pm 0,5\ \text{mm}$

The distance from Plane X to a line through the centres of the guides close to the front shall be

$l_{114} = 81,0\ \text{mm} \pm 0,5\ \text{mm}$

The distance from Plane Y to the centre of the right guide close to the front shall be

$l_{115} = 13,0\ \text{mm} \pm 0,5\ \text{mm}$

The distance from Plane Y to the centre of the left guide close to the front shall be

$l_{116} = 127,0\ \text{mm} \pm 0,5\ \text{mm}$

The diameter of all four guides shall be

$d_9 = 5,0\ \text{mm} \pm 0,3\ \text{mm}$

8.2.16 Tape path zone (Figures 16 to 18)

When the cassette is inserted into the drive, the tape is pulled outside of the case by tape guides. The tape path zone of the case is the zone in which the tape shall be able to move freely.

The distance from Plane X to the furthest points defining the zone limit on the left and right in front of the case shall be

$l_{117} = 100,0\ \text{mm} \pm 0,2\ \text{mm}$

The distance from Plane Y to the right front point defining the zone limit shall be

$l_{118} = 7\ \text{mm min.}$

The distance from Plane Y to the left front point defining the zone limit shall be

$l_{119} = 132\ \text{mm min.}$

With a holdback torque of 0,001 N·m applied to a nearly empty reel under the condition described in Figure 17, the force required to pull the tape out from the reel (see Figure 17) shall not exceed 0,17 N. This specification shall be applied to both the supply and take-up reels.

© ISO/IEC 2001 – All rights reserved
Copyright International Organization for Standardization
Provided by IHS under license with ISO
No reproduction or networking permitted without license from IHS
Not for Resale

With a holdback tension of 0,3 N applied to the take-up reel nearly full of the tape under the condition described in Figure 18, the torque required to wind the tape shall not exceed 0,015 N·m.

8.2.17 Tape access cavity (Figure 19)

When the cassette is inserted into the drive, tape guides in the drive pull the tape out into the drive tape path. The shape and dimensions of the access cavity for these tape guides shall be defined as follows.

The inside shape of the lid is not specified by this International Standard except that clearance shown cross-hatched shall be provided for drive tape threading mechanisms when the lid is opened.

The distance from Plane Y to the edge in the bottom side which defines the right extent of the tape access cavity shall be

l_{120} = 14,5 mm ± 0,3 mm

The distance from Plane X to the starting point for the right rear surface of the access cavity shall be

l_{121} = 86,0 mm $^{+\ 0,2\ mm}_{-\ 0,5\ mm}$

The distance from Plane Y to the extent of the right rear surface of the access cavity shall be

l_{122} = 27,75 mm max.

The distance from Plane X to the curved surface defining the rear extent of the tape access cavity shall be

l_{123} = 70,6 mm max.

The distance from Plane X to the surface defining the rear extent of the tape access cavity shall be

l_{124} = 62,1 mm max.

The distance from Plane Y to the extent of the left rear surface of the access cavity shall be

l_{125} = 112,25 mm min.

The distance from Plane Y to the left-most edge of the tape access cavity in the bottom side shall be

l_{126} = 125,5 mm ± 0,3 mm

The width at the end of the centre tape position limit post shall be

l_{127} = 8,7 mm max.

The width at the base of the centre tape position limit post shall be

l_{128} = 14,7 mm max.

The width of the rearmost surface of the tape access cavity shall be

l_{129} = 26,5 mm min.

The distance from Plane X to the inside surface of the centre tape position limit post shall be

l_{130} = 82,5 mm min.

The distance from Plane Z to the inside surface of the support for the centre tape position limit post shall be

l_{131} = 19 mm min.

The distance from Plane Z to the top inside surface of the support for the centre tape position limit post shall be

l_{132} = 20,8 mm min.

The distance from Plane X to the edge in the top side of the case which defines the lid case interface shall be

l_{133} = 77 mm max.

The distance from Plane Z to the inside of the case top side shall be

l_{134} = 23 mm min.

The distance from Plane Z in the lid area representing the depth of the access cavity shall be

l_{135} = 24 mm min.

© ISO/IEC 2001 – All rights reserved

Copyright International Organization for Standardization
Provided by IHS under license with ISO
No reproduction or networking permitted without license from IHS
Not for Resale

The distance from Plane Z to the lid edge when the lid is opened shall be

l_{136} = 27,5 mm $^{+\,1,5\ \text{mm}}_{-\,0,0\ \text{mm}}$ and shall provide clear entrance to the above defined tape access cavity.

The angle of the fillet at the inside and outside of the corner of the centre tape position limit post shall be

a_6 = 35° max.

The curvature of the rear tape access cavity surfaces shall have a radius defined by

r_4 = 39,6 mm max. and centred at the reel centres.

© ISO/IEC 2001 – All rights reserved
Copyright International Organization for Standardization
Provided by IHS under license with ISO
No reproduction or networking permitted without license from IHS
Not for Resale

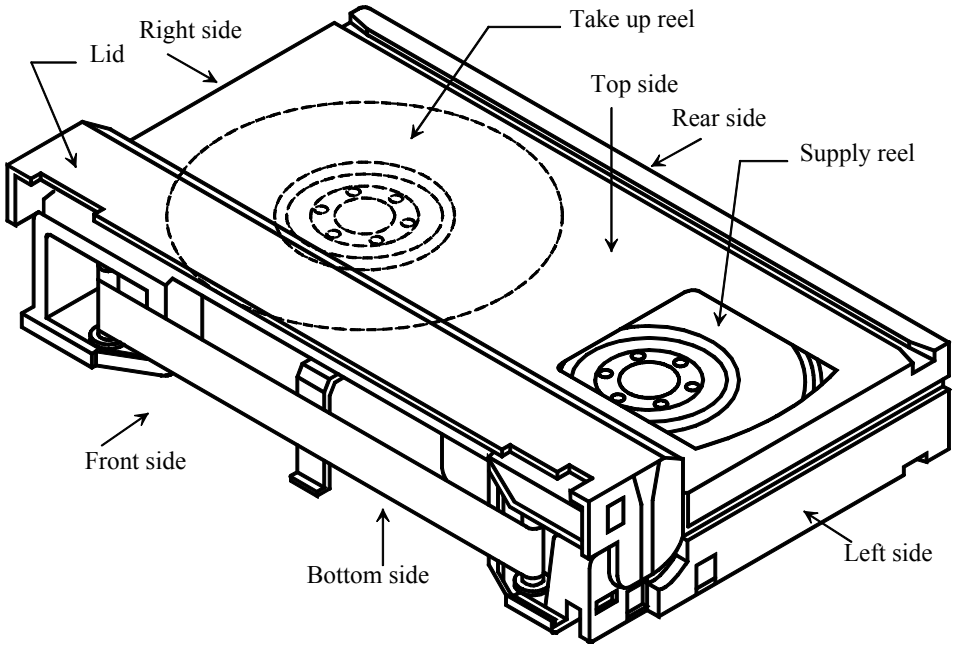

Figure 1 — Type S cassette top view (lid open)

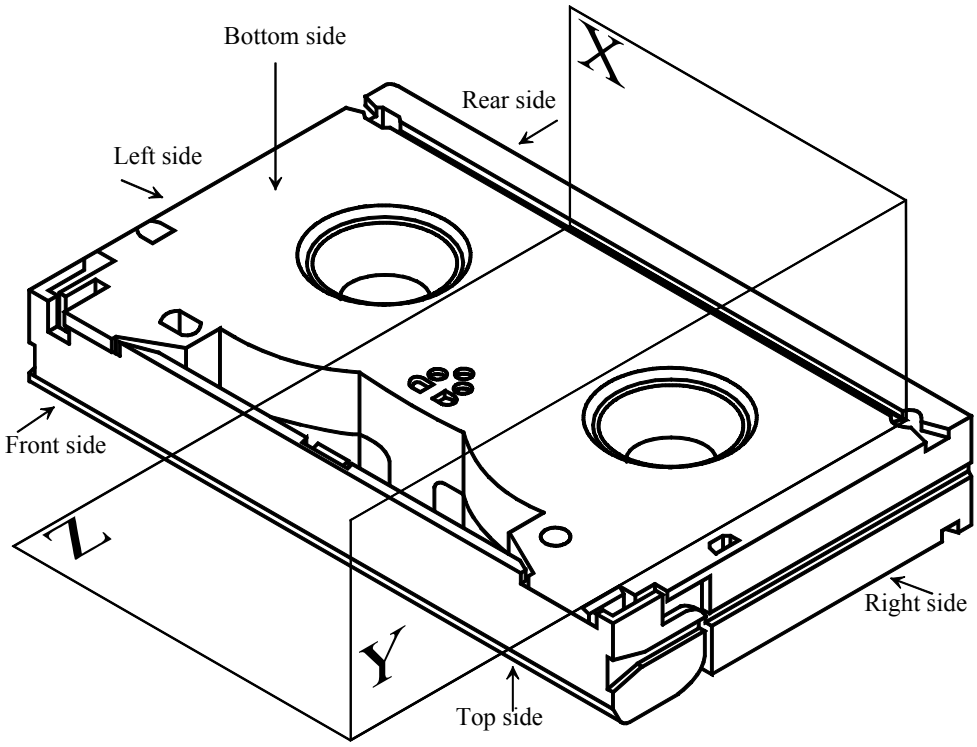

Figure 2 — Type S cassette bottom view (lid closed)

© ISO/IEC 2001 – All rights reserved

Copyright International Organization for Standardization
Provided by IHS under license with ISO
No reproduction or networking permitted without license from IHS
Not for Resale

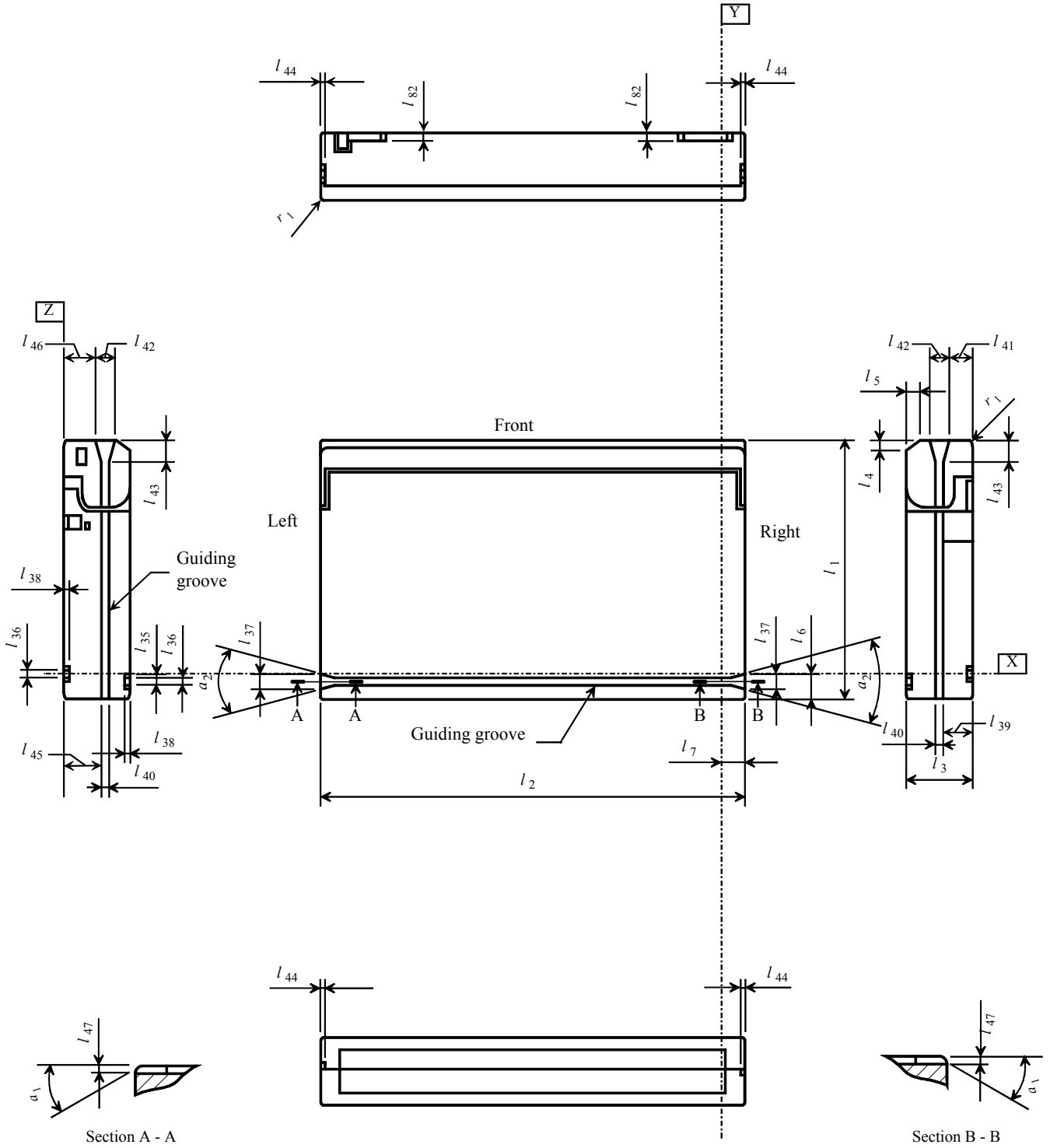

Figure 3 — Top side of Type S cassette (lid closed)

Copyright International Organization for Standardization
Provided by IHS under license with ISO
No reproduction or networking permitted without license from IHS
Not for Resale
© ISO/IEC 2001 – All rights reserved

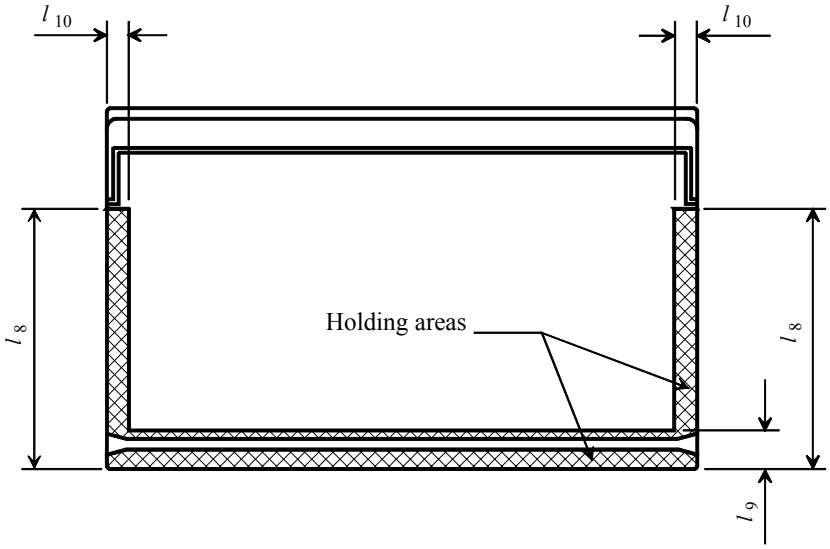

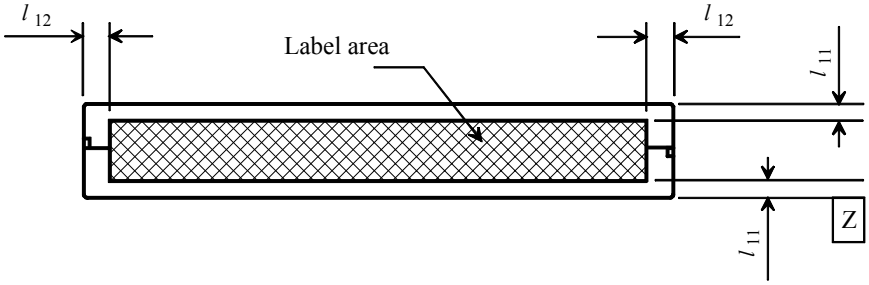

Figure 4 — Top side of Type S cassette, holding and label areas

© ISO/IEC 2001 – All rights reserved
Copyright International Organization for Standardization
Provided by IHS under license with ISO
No reproduction or networking permitted without license from IHS
Not for Resale

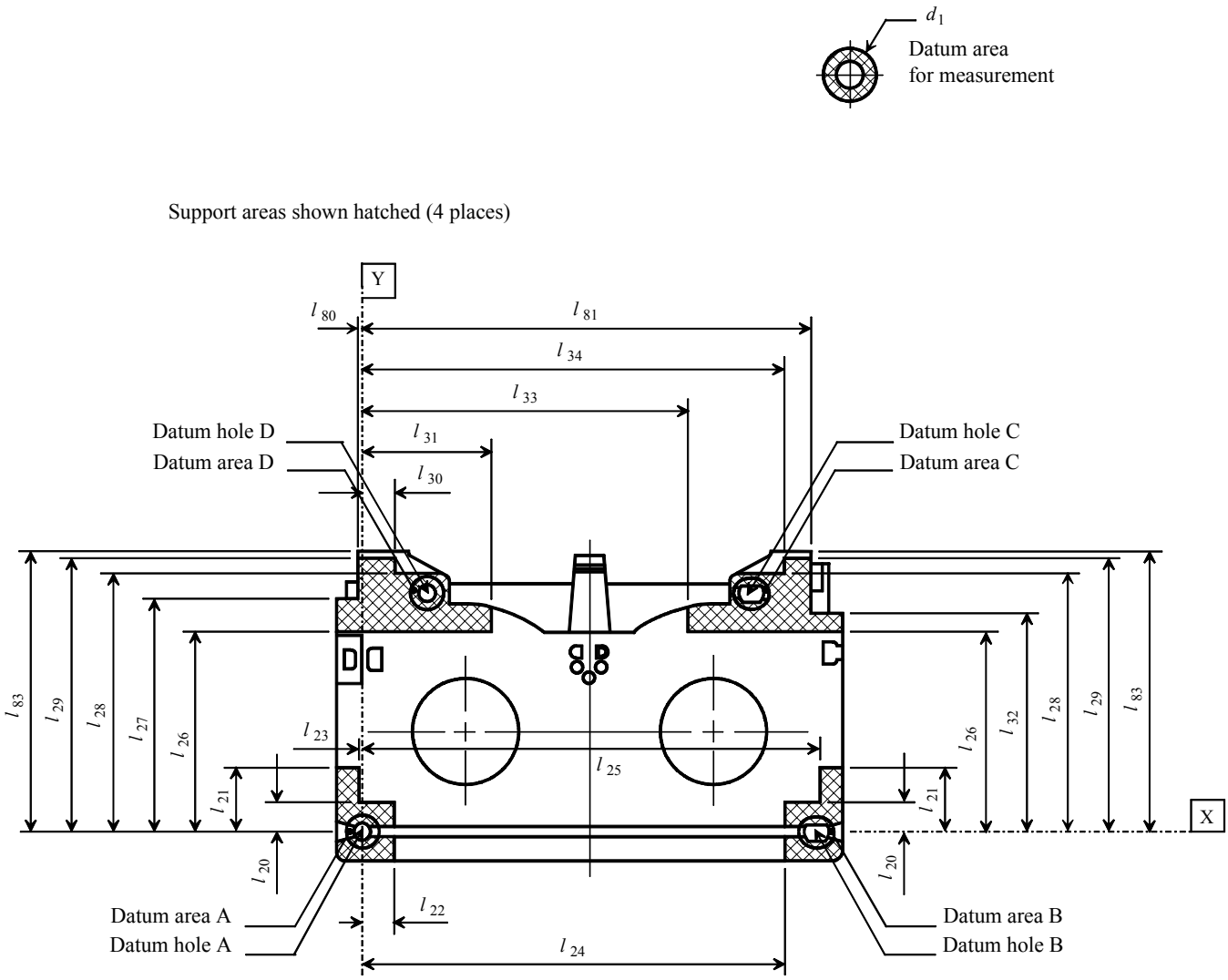

Figure 5 — Bottom side of Type S cassette (lid removed)

© ISO/IEC 2001 – All rights reserved
Copyright International Organization for Standardization
Provided by IHS under license with ISO
No reproduction or networking permitted without license from IHS
Not for Resale

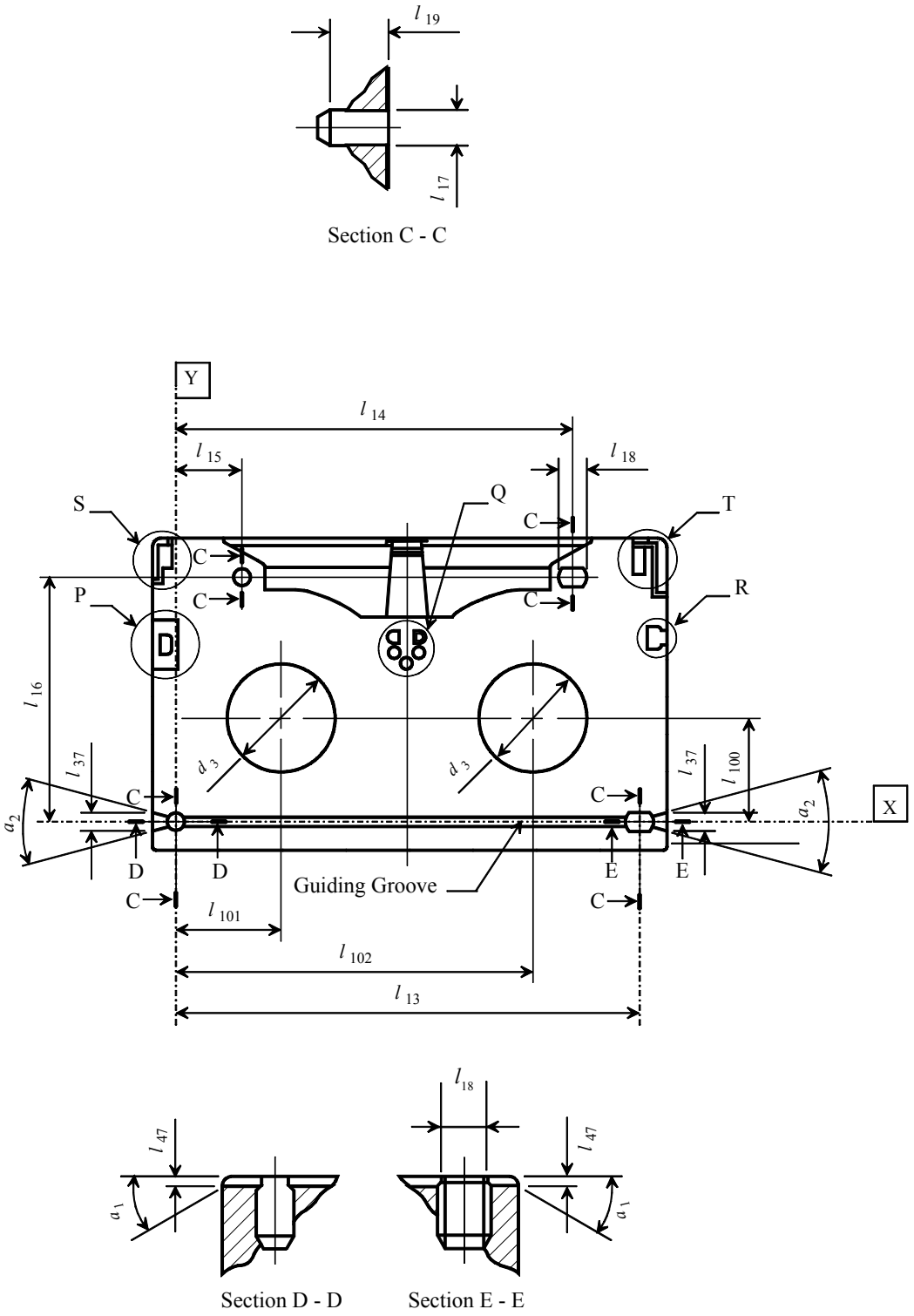

Figure 6 — Bottom side of Type S cassette (lid closed)

© ISO/IEC 2001 – All rights reserved

Copyright International Organization for Standardization
Provided by IHS under license with ISO
No reproduction or networking permitted without license from IHS
Not for Resale

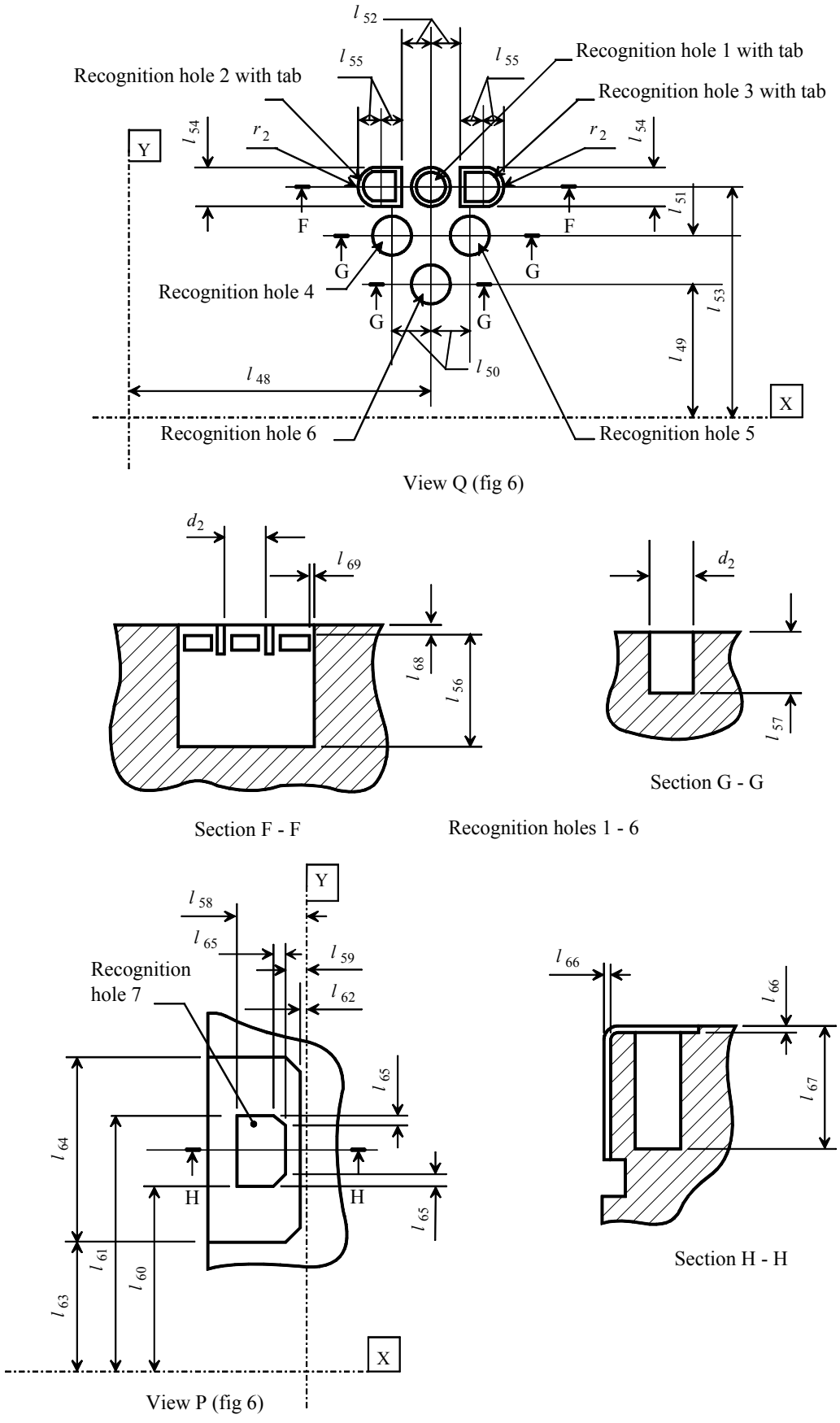

Figure 7 — Details of recognition holes of Type S cassette

Copyright International Organization for Standardization
Provided by IHS under license with ISO
No reproduction or networking permitted without license from IHS
Not for Resale
© ISO/IEC 2001 – All rights reserved

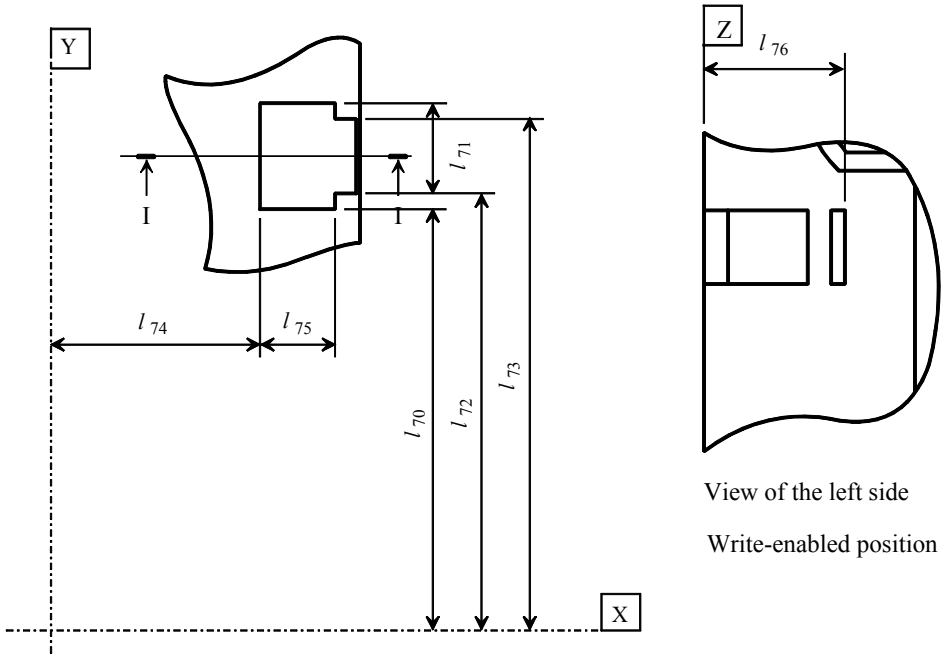

View R (fig 6)

View of the left side

Write-enabled position

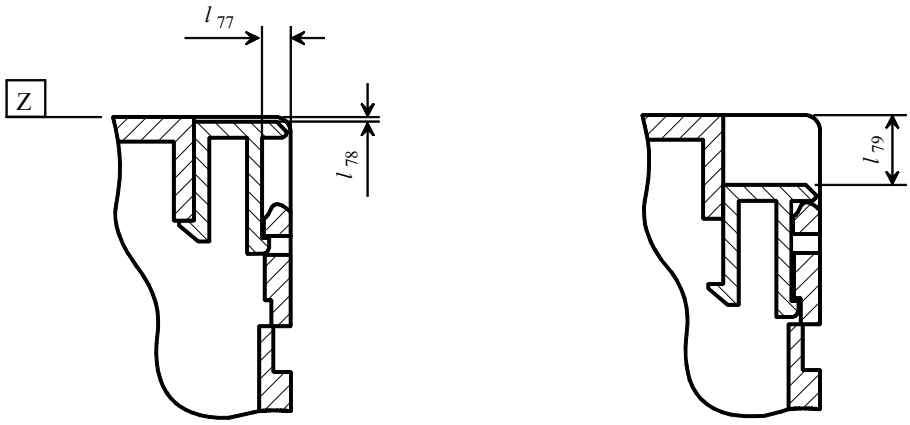

Write-enabled position

Write-inhibited position

Sections I - I

Figure 8 — Details of write-inhibit plug of Type S cassette

© ISO/IEC 2001 – All rights reserved

Copyright International Organization for Standardization
Provided by IHS under license with ISO
No reproduction or networking permitted without license from IHS
Not for Resale

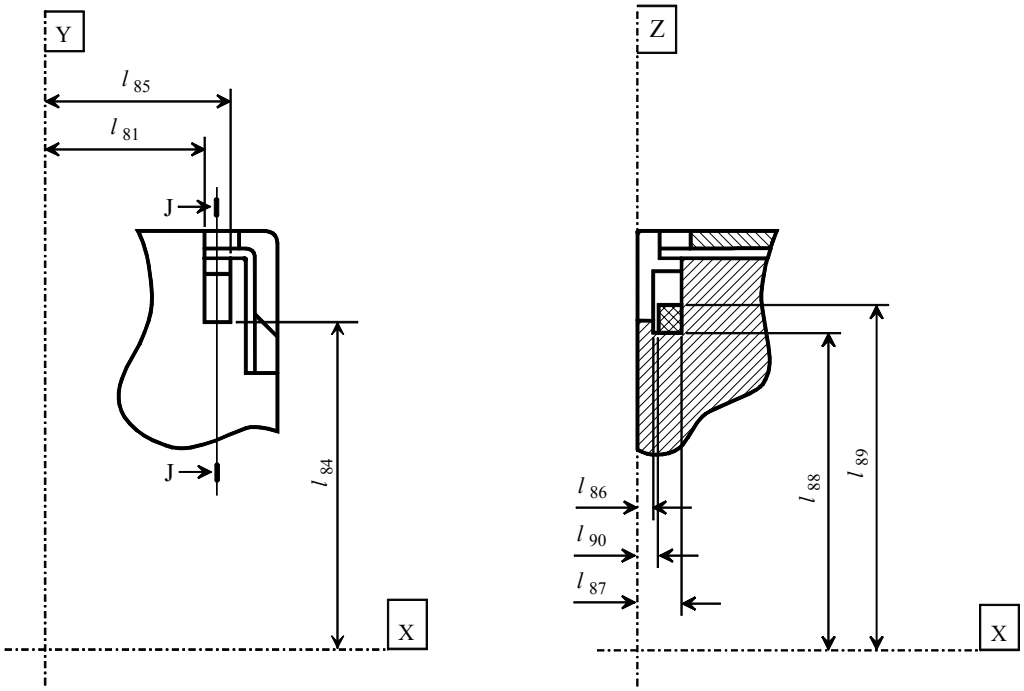

View T (fig 6) Section J - J

Figure 9 — Lid release insertion channel of Type S cassette

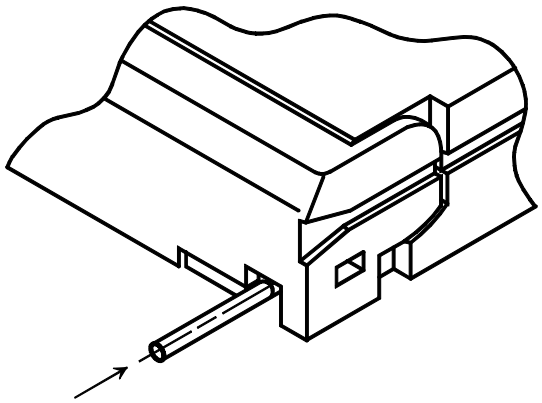

Figure 10 — Direction of force required to unlock the lid with Type S cassette

© ISO/IEC 2001 – All rights reserved
Copyright International Organization for Standardization
Provided by IHS under license with ISO
No reproduction or networking permitted without license from IHS
Not for Resale

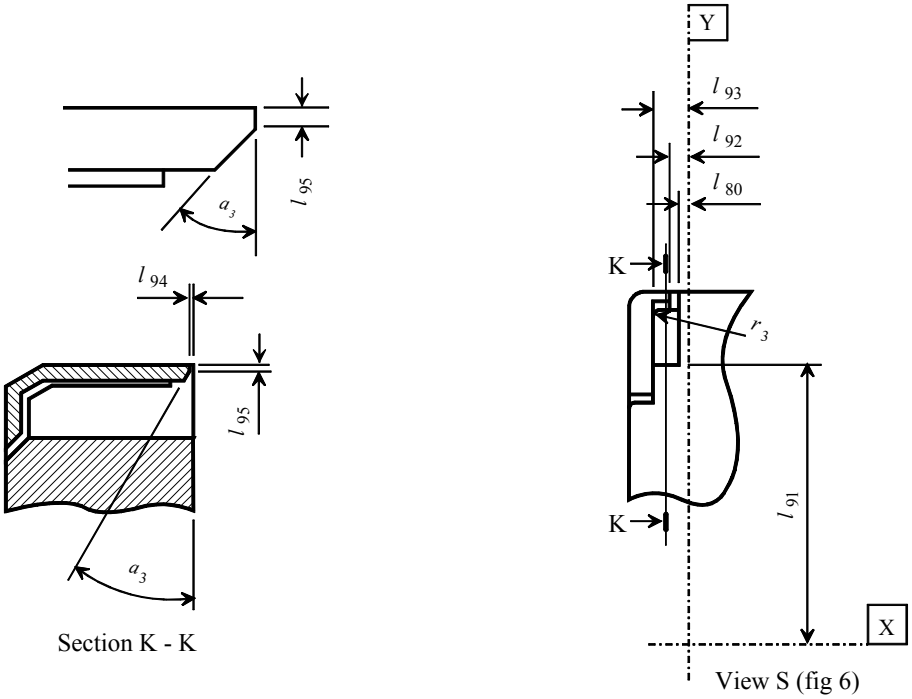

Figure 11 — Lid opening insertion channel of Type S cassette

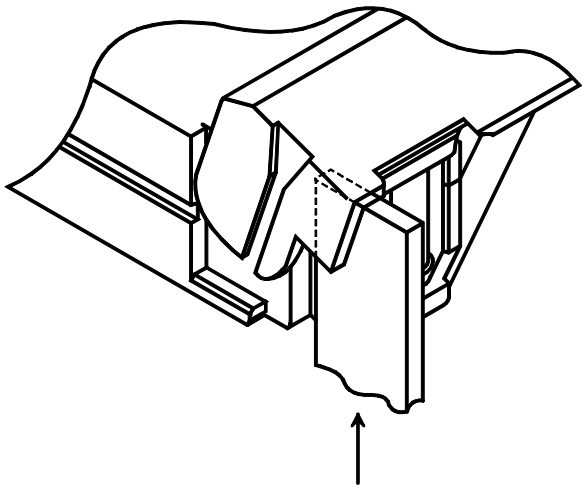

Figure 12 — Direction of force required to open the lid with Type S cassette

© ISO/IEC 2001 – All rights reserved
Copyright International Organization for Standardization
Provided by IHS under license with ISO
No reproduction or networking permitted without license from IHS
Not for Resale

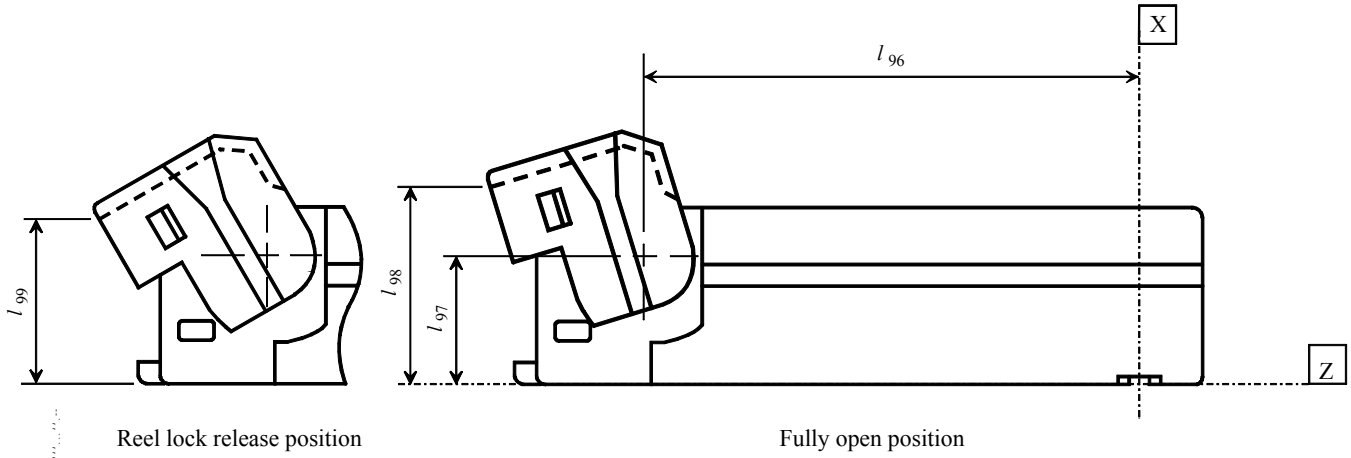

Figure 13 — Side view of Type S cassette (lid open)

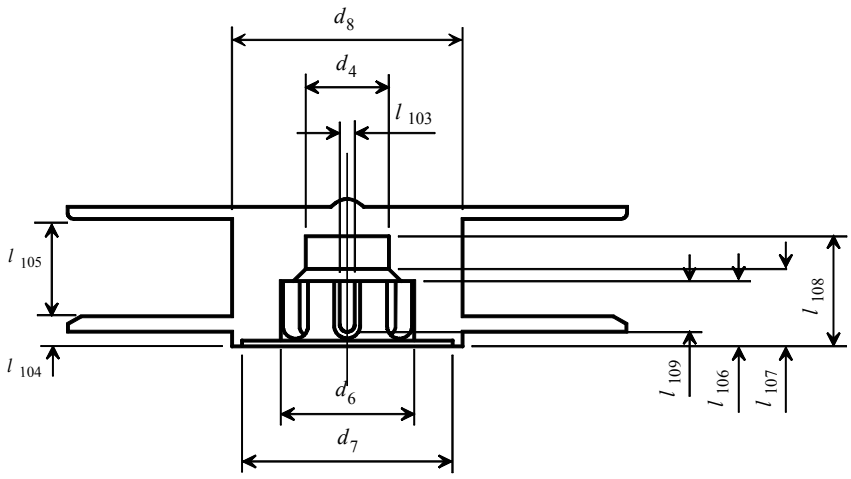

Section L - L

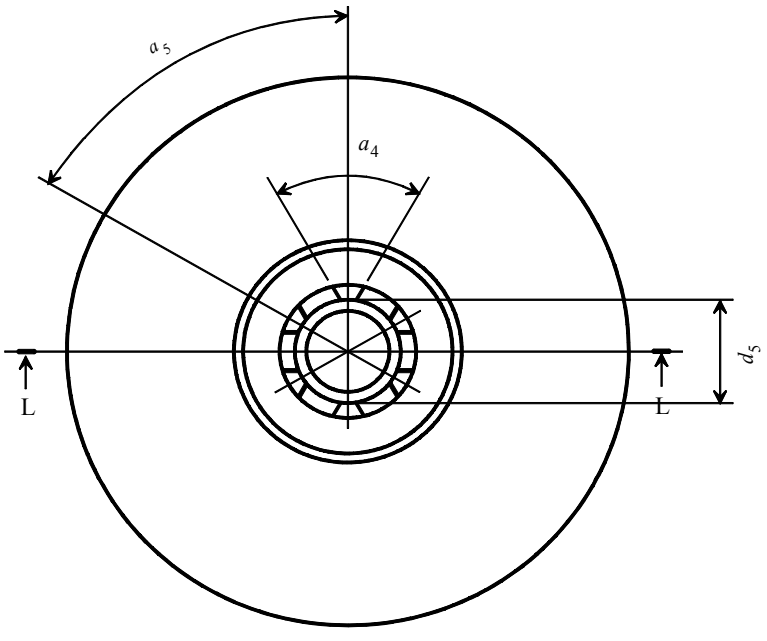

Figure 14 — Cassette reel of Type S cassette

© ISO/IEC 2001 – All rights reserved
Copyright International Organization for Standardization
Provided by IHS under license with ISO
No reproduction or networking permitted without license from IHS
Not for Resale

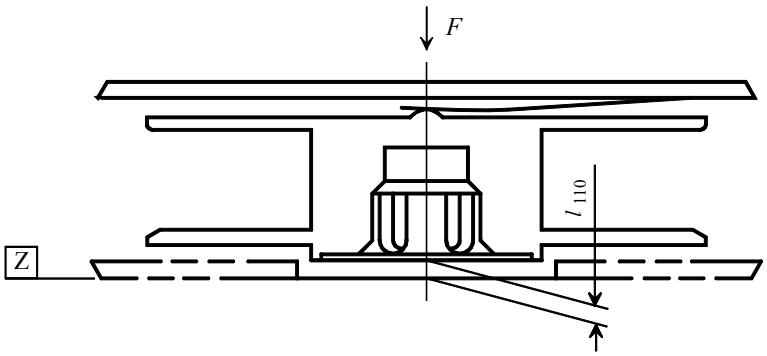

Figure 15 — Height of the reels of Type S cassette when loaded

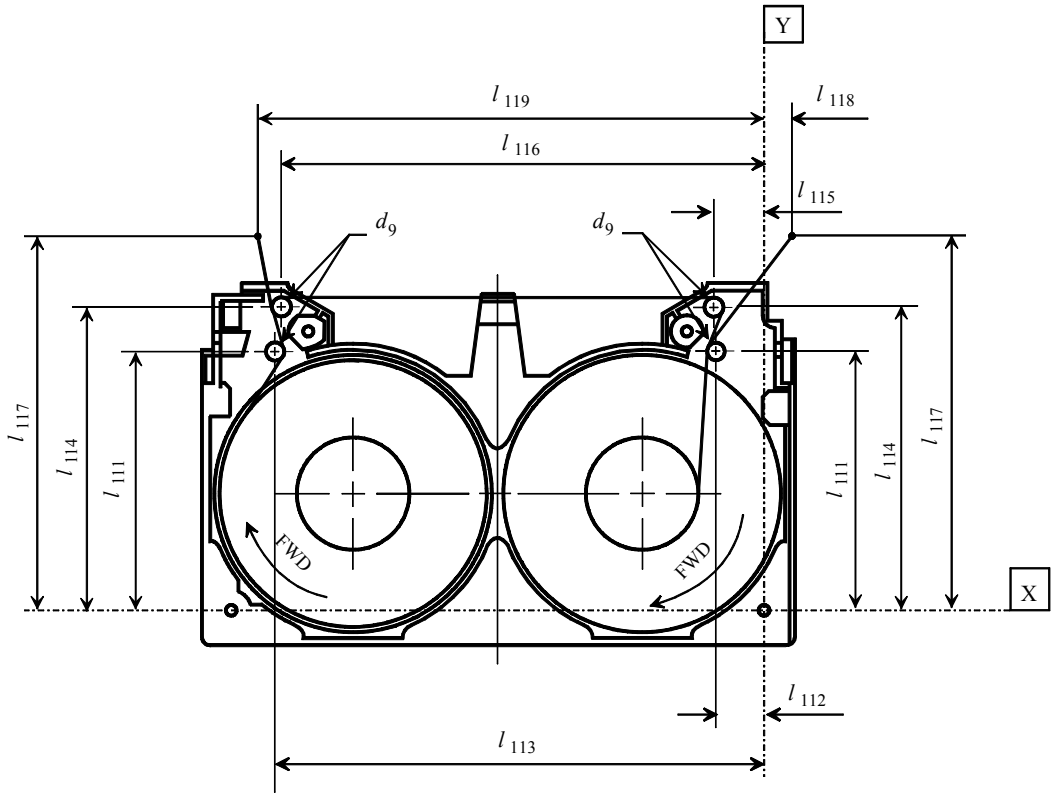

Figure 16 — Internal tape path of Type S cassette

© ISO/IEC 2001 – All rights reserved

Copyright International Organization for Standardization
Provided by IHS under license with ISO
No reproduction or networking permitted without license from IHS
Not for Resale

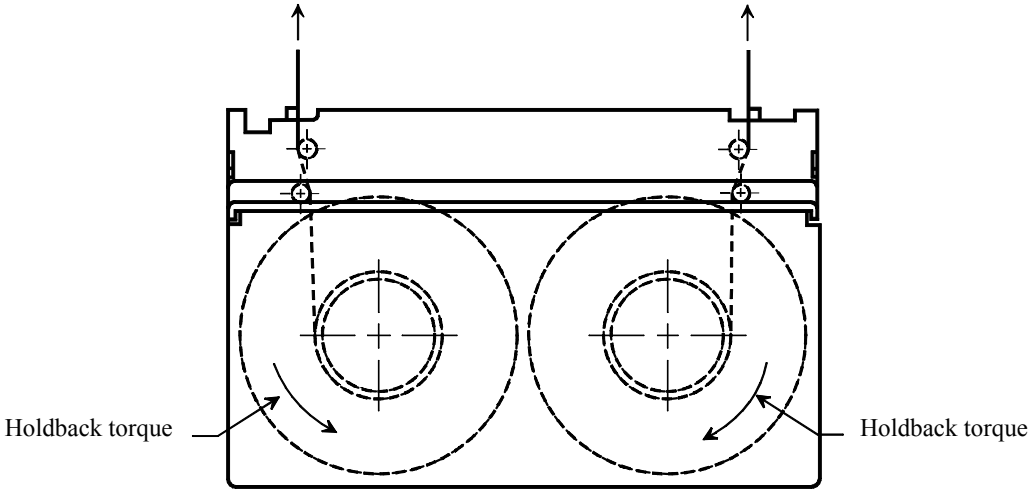

Figure 17 — Tape path to measure the extraction force of Type S cassette

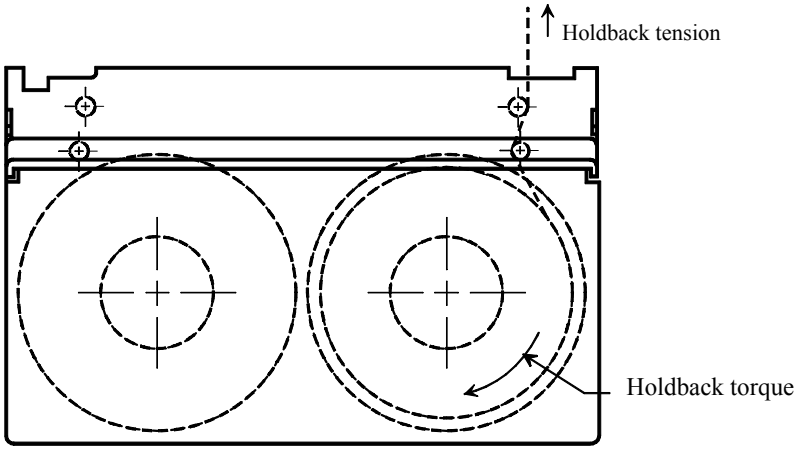

Figure 18 — Tape path to measure the frictional torque of the take-up reel of Type S cassette

© ISO/IEC 2001 – All rights reserved
Copyright International Organization for Standardization
Provided by IHS under license with ISO
No reproduction or networking permitted without license from IHS
Not for Resale

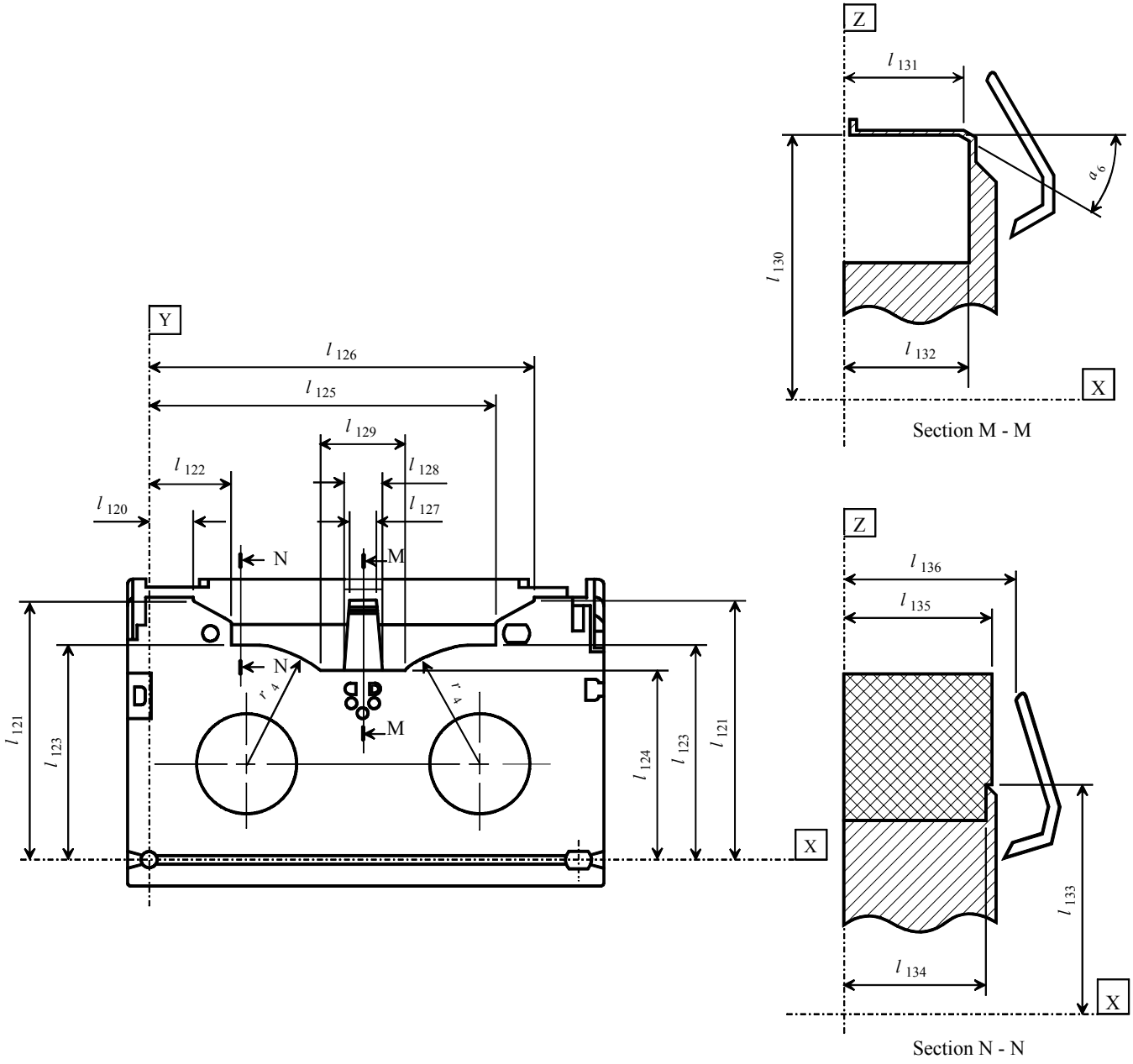

Figure 19 — Tape access cavity of Type S cassette

© ISO/IEC 2001 – All rights reserved

Copyright International Organization for Standardization
Provided by IHS under license with ISO
No reproduction or networking permitted without license from IHS
Not for Resale

8.3 Type L cassette

Figure 20 is a perspective view seen from the top.
Figure 21 is a perspective view seen from the bottom.
Figure 22 shows the top side with the lid closed using third angle projection.
Figure 23 shows the top side holding and label areas.
Figure 24 shows the bottom side with the lid removed.
Figure 25 shows the bottom side with the lid closed.
Figure 26 shows the details of the recognition holes.
Figure 27 shows the details of the write-inhibit plug.
Figure 28 shows the detail of the lid release insertion channel.
Figure 29 shows the lid unlock force direction.
Figure 30 shows the detail of the lid opening insertion channel.
Figure 31 shows the lid opening force direction.
Figure 32 shows the side view with the lid open.
Figure 33 shows the cassette reel.
Figure 34 shows the height of reels upon rotation.
Figure 35 shows the internal tape path.
Figure 36 shows the tape path to measure the extraction force.
Figure 37 shows the tape path to measure the friction torque of the take-up reel.
Figure 38 shows the tape access cavity requirements.
Figure 39 shows the cavity for compatibility.

Where dimension is the same as in the S cassette, the S cassette dimension is shown in brackets (=x).

8.3.1 Overall dimensions (Figure 22)

The overall dimensions of the case with the lid closed are as follows.

The total width of the case shall be l_{201} = 145,0 mm ±0,4 mm

The total length of the case shall be l_{202} = 254,0 mm $^{+\,0,3\ \text{mm}}_{-\,0,5\ \text{mm}}$

The distance from the top of the case to the Reference Plane Z shall be

l_{203} = 25,0 mm ± 0,3 mm (= l_3)

The front-top bevel edge shall start in the top side at a distance

l_{204} = 3,0 mm ± 0,5 mm (= l_4) from the front side and shall terminate in the front side at a distance l_{205} = 5,0 mm ± 0,5 mm (= l_5) from the top side

The bottom-front edge of the case shall be rounded with a radius r_{11} = 1,0 mm ± 0,1 mm (= r_1)

The distance from the back side to plane X shall be

l_{206} = 9,0 mm $^{+\,0,2\ \text{mm}}_{-\,0,1\ \text{mm}}$ (= l_6)

The distance from the right side to plane Y shall be

l_{207} = 8,5 mm $^{+\,0,2\ \text{mm}}_{-\,0,1\ \text{mm}}$

8.3.2 Holding areas (Figure 23)

The holding areas, shown cross-hatched, in Figure 23 shall be the areas along which the cassette shall be held down when inserted in the drive. The left and right edge holding areas shall extend from the rear side a distance of

l_{208} = 118,3 mm min.

The width of the holding surface along the rear edge from the left and right sides a distance l_{212} and shall be

l_{209} = 19,7 mm min.

The width of the holding surface along the remainder of the rear edge shall be

l_{210} = 10 mm min.

© ISO/IEC 2001 – All rights reserved
Copyright International Organization for Standardization
Provided by IHS under license with ISO
No reproduction or networking permitted without license from IHS
Not for Resale

The width of the left and right holding surfaces shall be

l_{211} = 10,7 mm min.

The distance along the rear edge from both left and right sides where the holding area is l_{209} wide shall be

l_{212} = 77 mm min.

8.3.3 Window

A window may be provided on the top side so that a part of the reels is visible. The window, if provided, shall not extend beyond the height of the cassette and shall not extend beyond the inner edge of the holding areas.

8.3.4 Label areas (Figure 23)

A portion of the rear side of the cassette and a portion of the top side of the cassette may be used for labels. The position and the size of the labels shall not interfere with the operation or clearance requirement of the cassette component parts. The area used for labels on the top side shall not extend beyond the inner edge of the holding areas.

The position and dimensions of the label area on the rear side are defined as follows.

The distance from the top side of the case to the top of the label area, and from the bottom of the label area to Plane Z, shall be

l_{213} = 3,0 mm ± 0,3 mm (= l_{11})

The distance from both the left and right sides of the case to the edges of the label area shall be

l_{214} = 56,0 mm ± 0,3 mm

The depth of the top side label depression shall be 0,3 mm max.

The depth of the rear side label depression shall be 0,5 mm ± 0,1 mm.

8.3.5 Datum areas and datum holes (Figures 24 and 25)

The annular datum areas E, F and G shall lie in plane Z. They determine the vertical position of the cassette in the drive. The annular datum area H shall be parallel to datum plane Z and within 0,3 mm of it. Each datum area shall have a diameter d_{11} equal to 10,0 mm ± 0,1mm and be concentric with the respective datum hole.

The centres of datum holes E and F lie in plane X.

The centre of datum hole E shall be at the intersection of planes X and Y.

The distance from the centre of the datum hole F to plane Y shall be

l_{215} = 237,00 mm ± 0,15 mm

The distance from the centre of the datum hole G to plane Y shall be

l_{216} = 168,5 mm ± 0,3 mm

The distance from the centre of the datum hole H to plane Y shall be

l_{217} = 68,5 mm ± 0,2 mm

The distance from the centre of the datum holes G and H to plane X shall be

l_{218} = 123,0 mm ± 0,2 mm

The diameter of datum holes E, F and H shall be

$d_{11} = 5{,}5\ \text{mm}\ {}^{+0{,}1\ \text{mm}}_{-0{,}0\ \text{mm}}$ as shown in section C-C of Figure 25.

The depth of all four datum holes shall be

l_{221} = 9 mm min. (= l_{19})

The distance across the flats of datum hole G shall be

$l_{219} = 5{,}5\ \text{mm}\ {}^{+0{,}1\ \text{mm}}_{-0{,}0\ \text{mm}} (= l_{17})$ as shown in section C'- C' of Figure 25.

The distance of the elongation in datum hole G shall be

l_{220} = 8,00 mm ± 0,15 mm (= l_{18})

© ISO/IEC 2001 – All rights reserved

Copyright International Organization for Standardization
Provided by IHS under license with ISO
No reproduction or networking permitted without license from IHS
Not for Resale

8.3.6 Support areas (Figure 24)

The cassette support areas are shown cross-hatched in Figure 24. Support areas E, F, G and H shall be coplanar with datum areas E, F, G and H, respectively, within ± 0,05 mm.

The areas within 1 mm of the edge of the cassette shall not be included in the support areas and shall be recessed from the support areas.

The dimensions and positions of the support areas shall be defined as follows.

The support area surrounding datum hole E shall be defined by

l_{222} = 21,0 mm ± 0,2 mm
l_{223} = 21,5 mm ± 0,2 mm

The support area surrounding datum hole F shall be defined by l_{222} and

l_{224} = 215,5 mm ± 0,3 mm

The support area surrounding datum hole H shall be defined by

l_{225} = 111,0 mm ± 0,3 mm
l_{226} = 129,0 mm ± 0,3 mm
l_{227} = 134,0 mm ± 0,3 mm
l_{228} = 58,5 mm ± 0,3 mm
l_{229} = 74,5 mm ± 0,3 mm

The support area surrounding datum hole G shall be defined by l_{225}, l_{226}, l_{227} and

l_{230} = 162,5 mm ± 0,3 mm
l_{231} = 178,5 mm ± 0,3 mm

8.3.7 Guiding grooves (Figure 25)

The cassette shall be provided with three guiding grooves for correct insertion into the drive.

The width of the bottom rear guiding groove shall be

$l_{232} = 4{,}0\ \text{mm}\ {}^{+\ 0{,}2\ \text{mm}}_{-\ 0{,}0\ \text{mm}}$

The distance across the flanged opening at the left and right edges of the bottom rear guiding groove shall be

l_{233} = 7,0 mm ± 0,3 mm

The depth of the groove at the flanged opening on the left and right sides of the bottom rear guiding groove shall be

l_{234} = 3,0 mm ± 0,1 mm

The depth of the bottom rear groove between the slanted left and right end areas shall be

$l_{235} = 2{,}0\ \text{mm}\ {}^{+\ 0{,}1\ \text{mm}}_{-\ 0{,}0\ \text{mm}}$

The distance from Plane Y to the end of the slant in the bottom of groove at the right side end shall be

l_{236} = 16,0 mm ± 0,5 mm

The distance from Plane Y to beginning of slant in the bottom of groove at the left side end shall be

l_{237} = 221,0 mm ± 0,5 mm.

The location of the guiding grooves in the bottom side extending from the front on the right and left side shall be defined by

l_{238} = 65,0 mm ± 0,4 mm
l_{239} = 10,0 mm ± 0,2 mm
l_{240} = 40,5 mm ± 0,1 mm
$l_{241} = 156{,}0\ \text{mm}\ {}^{+\ 0{,}0\ \text{mm}}_{-\ 0{,}3\ \text{mm}}$
l_{242} = 12,00 mm ± 0,15 mm

The depth of these two grooves from Plane Z shall be

l_{243} = 3,5 mm min. as shown in the front view of Figure 25.

© ISO/IEC 2001 – All rights reserved
Copyright International Organization for Standardization
Provided by IHS under license with ISO
No reproduction or networking permitted without license from IHS
Not for Resale

The angle of the flange opening of the bottom rear guiding groove at both ends shall be

$a_{11} = 30° \pm 3°$

8.3.8 Recognition holes (Figure 26)

There shall be 7 recognition holes numbered 1 to 7 as shown in Figure 26.

The position and dimensions of the recognition holes 1 to 6 are as follows.

A line through and locating the centres of holes 6 and 1 shall be

$l_{244} = 118{,}50$ mm ± 0,15 mm from plane Y

The centre of hole 6 shall be located

$l_{245} = 97{,}0$ mm ± 0,2 mm from Plane X

The centres of holes 4 and 5 shall be located

$l_{246} = 3{,}40$ mm ± 0,05 mm (= l_{50}) to the left and right of a line through the centres of holes 1 and 6

The location of a line through the centres of holes 4 and 5 shall be a distance

$l_{247} = 3{,}6$ mm ± 0,1 mm (= l_{51}) from the centre of hole 6

Recognition holes 2 and 3 are D shaped with the flats next to hole 1; the flats shall be a distance

$l_{248} = 4{,}00$ mm ± 0,05 mm (= l_{52}) from the centre of hole 1

The distance of a line through the centres of holes 1,2 and 3 from Plane X shall be

$l_{249} = 105{,}0$ mm ± 0,2 mm

The length of the flat of holes 2 and 3 shall be

$l_{250} = 3{,}4\ \text{mm}\ ^{+0{,}2\ \text{mm}}_{-0{,}0\ \text{mm}} (= l_{54})$

The distance from the centre to the flat of holes 2 and 3 shall be

$l_{251} = 1{,}7\ \text{mm}\ ^{+0{,}2\ \text{mm}}_{-0{,}0\ \text{mm}} (= l_{55})$

Holes 1, 2 and 3 contain a tab as shown in view Q of Figure 26.

The distance from the tab surface to the bottom of the cavity behind the tab shall be

$l_{252} = 10$ mm min. (= l_{56}) as shown in section F-F in Figure 26.

The depth of hole 4, 5 and 6 shall be

$l_{253} = 5$ mm min. (= l_{57})

The radius of the D holes 2 and 3 shall be

$r_{12} = 1{,}7\ \text{mm}\ ^{+0{,}2\ \text{mm}}_{-0{,}0\ \text{mm}} (= r_2)$

The diameter of holes 1, 4, 5 and 6 shall be

$d_{12} = 3{,}4\ \text{mm}\ ^{+0{,}2\ \text{mm}}_{-0{,}0\ \text{mm}} (= d_2)$

Recognition hole 7 is located in the bottom right side of the case shown in Figure 25, view P. The distance from the Plane X to the edge of recognition hole 7 nearest to the rear side of the case shall be

$l_{254} = 99{,}0\ \text{mm}\ ^{+0{,}3\ \text{mm}}_{-0{,}5\ \text{mm}}$

The length of the recognition hole 7 shall be

$l_{255} = 7{,}0\ \text{mm}\ ^{+0{,}5\ \text{mm}}_{-0{,}0\ \text{mm}}$

© ISO/IEC 2001 – All rights reserved

Copyright International Organization for Standardization
Provided by IHS under license with ISO
No reproduction or networking permitted without license from IHS
Not for Resale

The distance from the Plane Y to the edge of recognition hole 7 farthest from the right side of the case shall be

$$l_{256} = 1{,}9 \text{ mm } {}^{+0{,}1 \text{ mm}}_{-0{,}3 \text{ mm}}$$

The width of recognition hole 7 shall be

$$l_{257} = 5{,}0 \text{ mm } {}^{+0{,}5 \text{ mm}}_{-0{,}0 \text{ mm}}$$

The depth of recognition hole 7 shall be

l_{258} = 4,5 mm min.

This International Standard prescribes the following states of these recognition holes.

- Recognition hole 1 shall be closed.
- Recognition hole 2 shall be closed.
- Recognition hole 3 shall be closed.
- Recognition hole 4 shall be open.
- Recognition hole 5 shall be open.
- Recognition hole 6 shall be open.
- Recognition hole 7 shall be open.

Tabs may be used to close the recognition holes,. The dimensions of the tabs, if used, shall be as defined in the section F-F of Figure 26. The tabs shall withstand an applied force of 2,0 N max. without being punched out.

The surface of the tabs shall be recessed from the bottom side of the case a distance

l_{259} = 0,3 mm max. (= l_{68})

The space around the knockout tab in recognition holes 1, 2 and 3, as viewed in section F-F of Figure 26, shall be

l_{260} = 0,7 mm max. (= l_{69})

8.3.9 Write-inhibit plug (Figure 27)

The write-inhibit plug is located on the right side at the bottom of the case as shown in Figure 25, view R.

The distance in Plane Z from Plane X to the near edge of the write-inhibit plug hole shall be

l_{261} = 85,0 mm ± 0,3 mm

The span of the write-inhibit plug hole shall be

$l_{262} = 7{,}00 \text{ mm } {}^{+0{,}15 \text{ mm}}_{-0{,}00 \text{ mm}} (= l_{71})$ as shown in view R of Figure 25.

The distance on the right side of the case from Plane X to the near edge of the slider opening shall be

l_{263} = 85,3 mm min.

The distance on the right side of the case from Plane X to the far edge of the slider opening shall be

l_{264} = 91,3 mm max.

The distance from Plane Y to the inner side of the write-inhibit plug hole shall be

l_{265} = 1,9 mm ± 0,1 mm

The distance from the inner side of the write-inhibit hole to the slide rail shoulder shall be

$$l_{266} = 5{,}00 \text{ mm } {}^{+0{,}15 \text{ mm}}_{-0{,}00 \text{ mm}} (= l_{75})$$

The distance on the left side from Plane Z to the far edge of the write-inhibit plug detent hole shall be

l_{267} = 9,4 mm max. (= l_{76})

The tang on the left side of the body of the write-inhibit plug shall extend

l_{268} = 1,7 mm max. (= l_{77})

The surface of the write-inhibit plug, when in the write-enable position, shall be recessed from Plane Z a distance

l_{269} = 0,5 mm max. (= l_{78})

--`,,```,,,,````-`-`,,`,,`,`,,`---
Copyright International Organization for Standardization
Provided by IHS under license with ISO
No reproduction or networking permitted without license from IHS
Not for Resale
© ISO/IEC 2001 – All rights reserved

When the write-inhibit plug is pushed down, recording on the tape is inhibited.

The distance from Plane Z to the surface of the plug in the write-inhibit position shall be

l_{270} = 4,5 mm min. (= l_{79})

The write-inhibit plug shall not be deformed by 0,3 mm or more when a force of 2,0 N is applied to the centre of it. The force required to push down or lift up the write-inhibit plug shall be less than 40 N.

8.3.10 Pre-positioning surface (Figures 24 and 25)

The pre-positioning surfaces are parallel to Plane Y in the front of the bottom side and determine the initial location of the cassette as it is inserted into the drive loading slot.

The height of the pre-position surfaces above Plane Z shall be

l_{271} = 3,5 mm ± 0,1 mm as shown in the front view in Figure 25.

The distance from Plane X to the front of the left and right pre-position surfaces shall be

$l_{272} = 136{,}0\ \text{mm}\ ^{+0{,}2\ \text{mm}}_{-0{,}0\ \text{mm}}$ as shown in Figure 24.

The distance of the right side pre-position surface from Plane Y shall be

l_{273} = 3,5 mm min.

The distance of the left side pre-position surface from Plane Y shall be

l_{274} = 233,5 mm max.

8.3.11 Cassette lid (Figures 28, 29, 30, 31 and 32)

The cassette shall include a lid for protection of the tape during handling, storage and transportation. The lid shall be automatically locked when the lid is closed and it shall be unlocked when the release pins in the drive are inserted into both of the left and right bottom front channels shown in Figure 28.

The distance from Plane Y to the farthest edge of the left side lid release insertion channel shall be

l_{275} = 237,5 mm max.

The distance from Plane Y to the inside edge of the right side lid release insertion channel shall be

l_{276} = 3,5 mm min.

The distance from Plane Y to the outside edge of the right side lid release insertion channel shall be

l_{277} = 0,5 mm min.

The distance from Plane X to the near edge of both lid release insertion channels shall be

$l_{278} = 124{,}0\ \text{mm}\ ^{+0{,}0\ \text{mm}}_{-0{,}3\ \text{mm}}$

The distance from Plane Z to the near wall of the cavities containing the locking mechanisms shall be

l_{279} = 2,4 mm max. (= l_{86})

The distance from Plane Z to the far wall of the cavity containing the locking mechanism shall be

l_{280}= 5,85 mm min. (= l_{87})

The design of the locking mechanism is not specified by this International Standard except that it shall be operated by the release pin in the drive. The lid release mechanisms shall be actuated when the drive release pins are in the cross-hatched area shown in sections J'-J' and J-J of Figure 28 and defined by l_{279} and

l_{281} = 123,2 mm max.
l_{282} = 124,8 mm min.
l_{283} = 3 mm max. (= l_{90})

The force needed to unlock the lid shall be less than 1 N in the directions shown by Figure 29.

After the lid is unlocked, the lid shall be open when the lid opening lever in the drive is inserted into the channel shown in Figure 30.

© ISO/IEC 2001 – All rights reserved

Copyright International Organization for Standardization
Provided by IHS under license with ISO
No reproduction or networking permitted without license from IHS
Not for Resale

The distance from Plane X to the near end of the lid opening channel shall be

l_{284} = 126,3 mm max.

The distance from Plane Y to the right inside wall of the lid opening channel shall be

l_{285} = 42,1 mm ± 0,2 mm

The distance across the lid opening channel shall be

l_{286} = 5,20 mm ± 0,15 mm

The distance from bottom side of the case to the front bottom edge of the lid shall be

l_{287} = 0,1 mm ± 0,1 mm (= l_{94})

The bottom front edge of the lid shall have a flat for the distance defined by

l_{288} = 1,2 mm ± 0,2 mm (= l_{95})

The depth of the lid opening channel in the front side of the main case shall be

l_{289} = 19,5 mm min.

The inside front bottom edge of the lid shall be chamfered at an angle defined by

a_{12} = 30° ± 3° (= a_3) starting at the flat defined by l_{287}

The force needed to open the lid shall be 1,5 N max. in the direction shown in Figure 31.

The lid rotates around the axis defined in Figure 32 by dimensions

l_{290} = 118,0 mm ± 0,5 mm
l_{291} = 18,0 mm ± 0,5 mm

The maximum possible lid opening distance shall be

l_{292} = 29 mm min.

8.3.12 Cassette reel lock (Figure 32)

The reels shall be locked when the cassette is removed from the tape drive and shall be unlocked when the cassette is inserted into the drive.

The design of the locking mechanism is not specified by this International Standard except that the reel shall be completely released when the cassette lid is opened from reference plane Z defined by

l_{293} = 23,5 mm max. The minimum distance required to unlock the reels is not specified.

8.3.13 Reel access holes (Figure 25)

The case shall have two circular reel access holes which shall allow penetration of the drive spindles. The dimension and positions of the access holes shall be

The centreline of both reel holes shall be the distance from Plane X defined by

l_{294} = 55,5 mm ± 0,2 mm

The distance from Plane Y along the line defined by l_{293} to the centre of the right reel hole shall be

l_{295} = 56,0 mm ± 0,2 mm

The distance from Plane Y along the line defined by l_{293} to the centre of the left reel hole shall be

l_{296} = 181,0 mm ± 0,2 mm

The diameter of both reel holes shall be

d_{13} = 42,5 mm ± 0,2 mm

--`,,```,,,,````-`-`,,`,,`,`,,`---

© ISO/IEC 2001 – All rights reserved
Copyright International Organization for Standardization
Provided by IHS under license with ISO
No reproduction or networking permitted without license from IHS
Not for Resale

8.3.14 Reels (Figure 33)

The reels shall have a spindle-receiving cavity extending from the bottom side, with inward facing gear teeth for engaging the drive gear and a round upper cylinder to define the axis of rotation precisely.

The diameter of the round upper cylinder in the receiving cavity shall be

$$d_{14} = 11{,}00\ \text{mm}\ {}^{+0{,}15\ \text{mm}}_{-0{,}00\ \text{mm}} (= d_4)$$

The tops of the inside gear teeth shall lie in a cylinder surface with a diameter defined by

$$d_{15} = 14{,}0\ \text{mm}\ {}^{+0{,}4\ \text{mm}}_{-0{,}2\ \text{mm}} (= d_5)$$

The base of the inside gear teeth shall lie in a cylinder surface with a diameter defined by

$$d_{16} = 18{,}0\ \text{mm} \pm 0{,}2\ \text{mm}\ (= d_6)$$

The base surface of the reel are formed by two concentric annular rings.

The smaller ring inside diameter shall be

$d_{17} = 27{,}6\ \text{mm} \pm 0{,}2\ \text{mm}\ (= d_7)$ and the outside diameter shall be
$d_{18} = 30{,}0\ \text{mm} \pm 0{,}2\ \text{mm}\ (= d_8)$

The larger ring inside diameter shall be

$d_{19} = 37{,}6\ \text{mm} \pm 0{,}2\ \text{mm}$ and the outside diameter shall be
$d_{20} = 40{,}0\ \text{mm} \pm 0{,}2\ \text{mm}$

The width of the tops of the inside gear teeth shall be

$$l_{296}7 = 2{,}0\ \text{mm} \pm 0{,}5\ \text{mm}\ (= l_{103})$$

The distance from the reel base annular ring to the inside lower flange at the tape hub surface shall be

$$l_{298} = 3{,}75\ \text{mm}\ {}^{+0{,}20\ \text{mm}}_{-0{,}10\ \text{mm}} (= l_{104})$$

The distance between the lower and upper flanges at the tape hub surface shall be

$$l_{299} = 13{,}5\ \text{mm}\ {}^{+0{,}2\ \text{mm}}_{-0{,}5\ \text{mm}} (= l_{105})$$

The distance from the reel base annular ring to the top of the inside gear teeth base cylinder shall be

$$l_{300} = 9{,}00\ \text{mm} \pm 0{,}15\ \text{mm}\ (= l_{106})$$

The distance from the reel base annular ring to the start of the round upper cylinder shall be

$$l_{301} = 10{,}5\ \text{mm} \pm 0{,}3\ \text{mm}\ (= l_{107})$$

The distance from the reel base annular ring to the top of the round upper cylinder shall be

$$l_{302} = 15{,}0\ \text{mm}\ {}^{+0{,}5\ \text{mm}}_{-0{,}0\ \text{mm}} (= l_{108})$$

The length of the tops of the gear teeth from the top of the inside gear teeth base cylinder shall be

$$l_{303} = 6{,}50\ \text{mm} \pm 0{,}15\ \text{mm}\ (= l_{109})$$

The gear teeth side surfaces extend from the base cylinder to the tops cylinder and shall be at an angle with respect to each other defined by

$$a_{13} = 60° \pm 5°\ (= a_4)$$

The 6 gear teeth shall be spaced around the base cylinder at an angle defined by

$$a_{14} = 60° \pm 1°\ (= a_5)$$

The reels assembled in a cassette shall rotate freely under the condition described in Figure 34.

The distance from Plane Z to the annular base reel surface which provides free rotation of the reel when the cassette is loaded into a drive shall be

$$l_{304} = 2{,}4\ \text{mm} \pm 0{,}2\ \text{mm}$$

© ISO/IEC 2001 – All rights reserved

Copyright International Organization for Standardization
Provided by IHS under license with ISO
No reproduction or networking permitted without license from IHS
Not for Resale

The reels assembled in a cassette shall be spring loaded with a force F of 3,5 N ± 0,5 N as shown in Figure 34.

When the cassette is inserted into the drive, the parts which are pressed to the reels shall extend beyond the height of the cassette. The parts shall not rotate with the reels. Their dimensions and position shall be defined by

d_{21} = 10 mm min. and
l_{305} = 1,5 mm max.

8.3.15 Position of the tape in the case (Figure 35)

Four tape guides define the tape path inside the cassette. Two guides on the left side, one close to the front opening of the case and one close to the supply reel. Two guides on the right side, one close to the front opening of the case and one near to the take-up reel.

The distance from Plane X to a line through the centres of the guides close to the reels shall be

l_{306} = 122,0 mm ± 0,5 mm

The distance from Plane Y to the centre of right guide close to the take-up reel shall be

l_{307} = 56,0 mm ± 0,5 mm

The distance from Plane Y to the centre of the left guide close to the supply reel shall be

l_{308} = 181,0 mm ± 0,5 mm

The distance from Plane X to a line through the centres of the guides close to the front side of the case shall be

l_{309} = 130,0 mm ± 0,5 mm

The distance from Plane Y to the centre of the right guide close to the front side of the case shall be

l_{310} = 61,5 mm ± 0,5 mm

The distance from Plane Y to the centre of the left guide close to the front side of the case shall be

l_{311} = 175,5 mm ± 0,5 mm

The diameter of the two front-most guides shall be

d_{22} = 5,0 mm ± 0,3 mm (= d_9)

The diameter of the two guides closer to the reels shall be

d_{23} = 6,0 mm ± 0,3 mm

8.3.16 Tape path zone (Figures 35 to 37)

When the cassette is inserted into the drive, the tape is pulled outside of the case by tape guides. The tape path zone of the case is the zone in which the tape shall be able to move freely.

The distance from Plane X to the furthest points defining the zone limit on the left and right in front of the case shall be

l_{312} = 149,0 mm ± 0,2 mm

The distance from Plane Y to the right front point defining the zone limit shall be

l_{313} = 41,5 mm min.

The distance from Plane Y to the left front point defining the zone limit shall be

l_{314} = 180,5 mm min.

With a holdback torque of 0,001 N·m applied to a nearly empty reel under the condition described in Figure 36, the force required to pull the tape out from the reel shall not exceed 0,17 N. This specification shall be applied to both the supply and take-up reels.

With a holdback tension of 0,3 N applied to the take-up reel nearly full of the tape under the condition described in Figure 37, the torque required to wind the tape not exceed 0,03 N·m.

© ISO/IEC 2001 – All rights reserved
Copyright International Organization for Standardization
Provided by IHS under license with ISO
No reproduction or networking permitted without license from IHS
Not for Resale

8.3.17 Tape access cavity (Figure 38)

When the cassette is inserted into the drive, tape guides in the drive pull out the tape into the drive tape path. The shape and dimensions of the access cavity for these tape guides shall be defined as follows.

The inside shape of the lid is not specified by this International Standard except that clearance shown cross-hatched shall be provided for drive tape threading mechanisms when the lid is opened l_{330} from datum plane Z.

The distance from Plane Y to the starting point for the right rear surface of the access cavity shall be

l_{315} = 63,0 mm ± 0,3 mm

The distance from Plane X to the starting point for the right rear surface of the access cavity shall be

$l_{316} = 135{,}0 \text{ mm } {}^{+0{,}2\text{ mm}}_{-0{,}5\text{ mm}}$

The distance from Plane Y to the extent of the right rear surface of the access cavity shall be

l_{317} = 76,25 mm max.

The distance from Plane X to start of the radiused surface which defines the rear-most extent of the tape access cavity shall be

l_{318} = 119,7 mm max.

The distance from Plane X to the surface defining the rear-most extent of the tape access cavity shall be

l_{319} = 111,1 mm max.

The distance from Plane Y to the extent of the left rear surface of the access cavity shall be

l_{320} = 160,75 mm min.

The distance from Plane Y to the edge in the bottom side which defines the left-most extent of the tape access cavity shall be

l_{321} = 174,0 mm ± 0,3 mm

The width at the end of the centre tape position limit arm shall be

l_{322} = 8,7 mm max. (= l_{127})

The width at the base of the centre tape position limit arm shall be

l_{323} = 14,7 mm max. (= l_{128})

The width of the rearmost surface of the tape access cavity shall be

l_{324} = 26,5 mm min. (= l_{129})

The distance from Plane X to the inside surface of the centre tape position limit post shall be

l_{325} = 131,5 mm min.

The distance from Plane Z to the inside surface of the support for the centre tape position limit post shall be

l_{326} = 19 mm min. (= l_{131})

The distance from Plane Z to the top inside surface of the support for the centre tape position limit post shall be

l_{327} = 20,8 mm min. (= l_{132})

The distance from Plane X to the edge in the top side of the case which defines the lid case interface shall be

l_{328} = 126 mm max.

The distance from Plane Z to the inside of the case top side shall be

l_{329} = 23 mm min. (= l_{134})

The distance from Plane Z in the lid area representing the depth of the access cavity shall be

l_{330} = 24 mm min. (= l_{135})

The distance from Plane Z to the lid edge which when the lid is opened shall provide the above defined tape access cavity shall be

$l_{331} = 27{,}5 \text{ mm } {}^{+1{,}5\text{ mm}}_{-0{,}0\text{ mm}} (= l_{136})$

© ISO/IEC 2001 – All rights reserved

Copyright International Organization for Standardization
Provided by IHS under license with ISO
No reproduction or networking permitted without license from IHS
Not for Resale

The angle of the fillet at the inside and outside of the corner of the centre tape position limit post shall be

a_{15} = 35° max. (= a_6)

The curvature of the rear tape access cavity surfaces shall have a radius defined by

r_{13} = 39,6 mm max. (= r_4) and centred at the reel centres.

The centre points for generating the two radiused surfaces shall be defined by

l_{332} = 80,0 mm ± 0,3 mm
l_{333} = 80,5 mm ± 0,3 mm
l_{334} = 156,5 mm ± 0,3 mm as shown in Figure 38.

8.3.18 Cavity for compatibility with Type S cassette (Figure 39)

The Type L cassette shall have the cavities for the cassette support guides, the lid opening lever, and the lid unlocking pin provided for Type S cassette. Their positions and dimensions shall be defined as follows.

The relief in the bottom side near the right side shall be defined by

l_{335} = 14,5 mm ± 0,2 mm
l_{336} = 31,0 mm ± 0,3 mm
l_{337} = 45,5 mm ± 0,3 mm
l_{338} = 15,5 mm ± 0,2 mm
l_{339} = 25,0 mm ± 0,3 mm
l_{340} = 35,0 mm ± 0,3 mm

The relief in the bottom side near the left side shall be defined by

l_{335}, l_{336}, l_{337} and
l_{341} = 202,0 mm ± 0,4 mm
l_{342} = 212,0 mm ± 0,4 mm
l_{343} = 221,5 mm ± 0,4 mm

The depth of the cavities for the cassette support guides for Type L cassette shall be 0,5 mm ± 0,2 mm.

The distance from Plane X to the edge of the lid opening lever cavity shall be

$l_{344} = 120{,}0\ \text{mm}\ ^{+0{,}0\ \text{mm}}_{-0{,}3\ \text{mm}}$

The distance from Plane Y to the right edge of the lid opening lever cavity shall be

l_{345} = 186,7 mm max.

The distance from Plane X to the left edge of the lid opening lever cavity shall be

l_{346} = 190,3 min.

The depth of the lid opening lever cavity shall be

l_{347} = 6 mm min.

© ISO/IEC 2001 – All rights reserved
Copyright International Organization for Standardization
Provided by IHS under license with ISO
No reproduction or networking permitted without license from IHS
Not for Resale

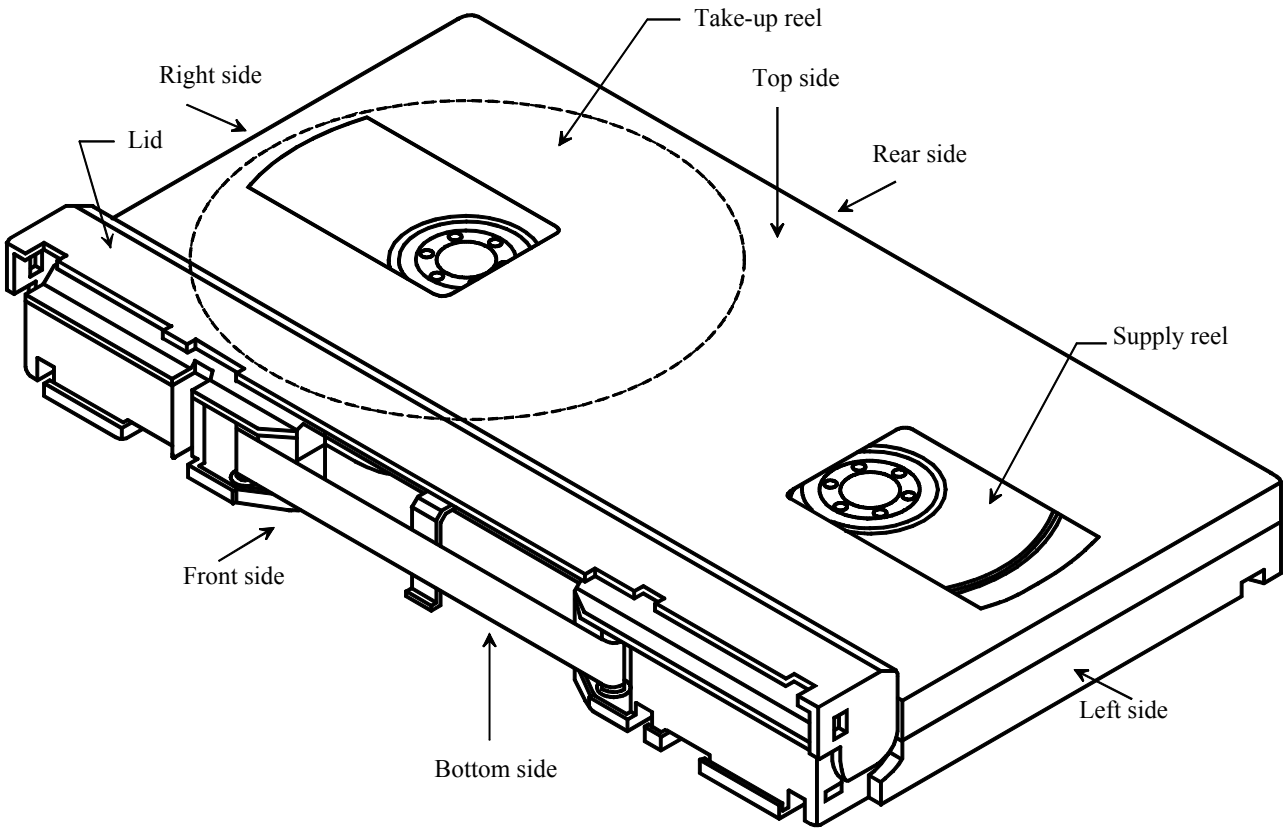

Figure 20 — Type L cassette top view (lid open)

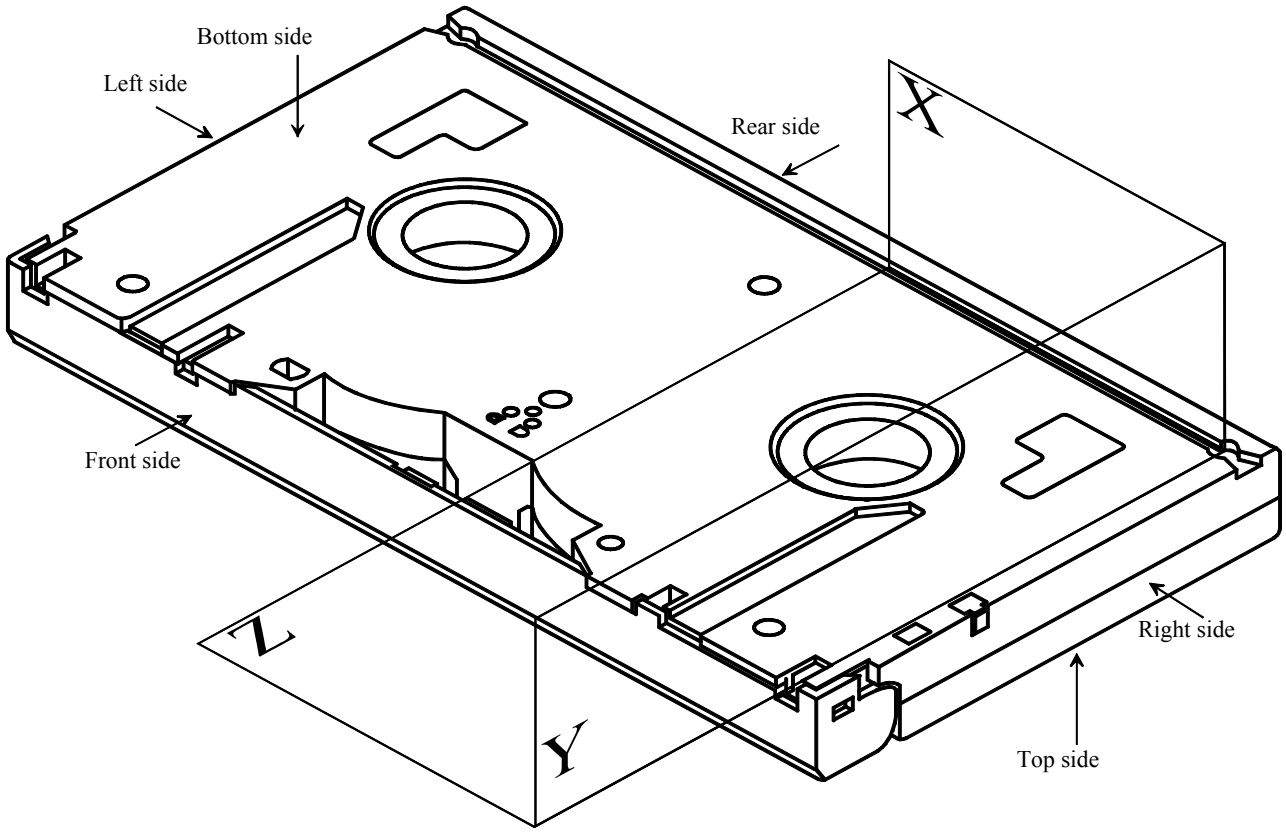

Figure 21 — Type L cassette bottom view (lid closed)

© ISO/IEC 2001 – All rights reserved
Copyright International Organization for Standardization
Provided by IHS under license with ISO
No reproduction or networking permitted without license from IHS
Not for Resale

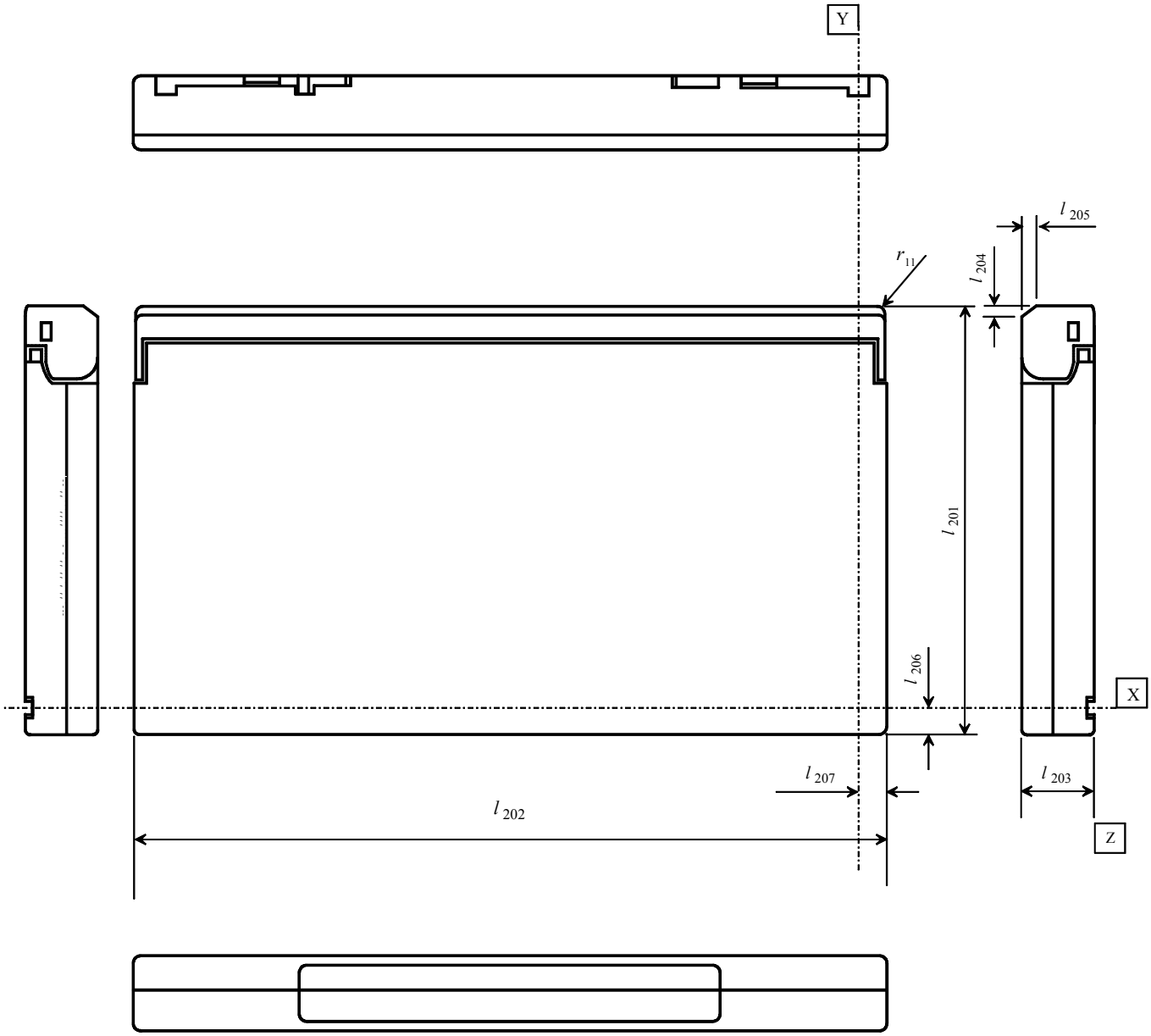

Figure 22 — Top side of Type L cassette (lid closed)

© ISO/IEC 2001 – All rights reserved
Copyright International Organization for Standardization
Provided by IHS under license with ISO
No reproduction or networking permitted without license from IHS
Not for Resale

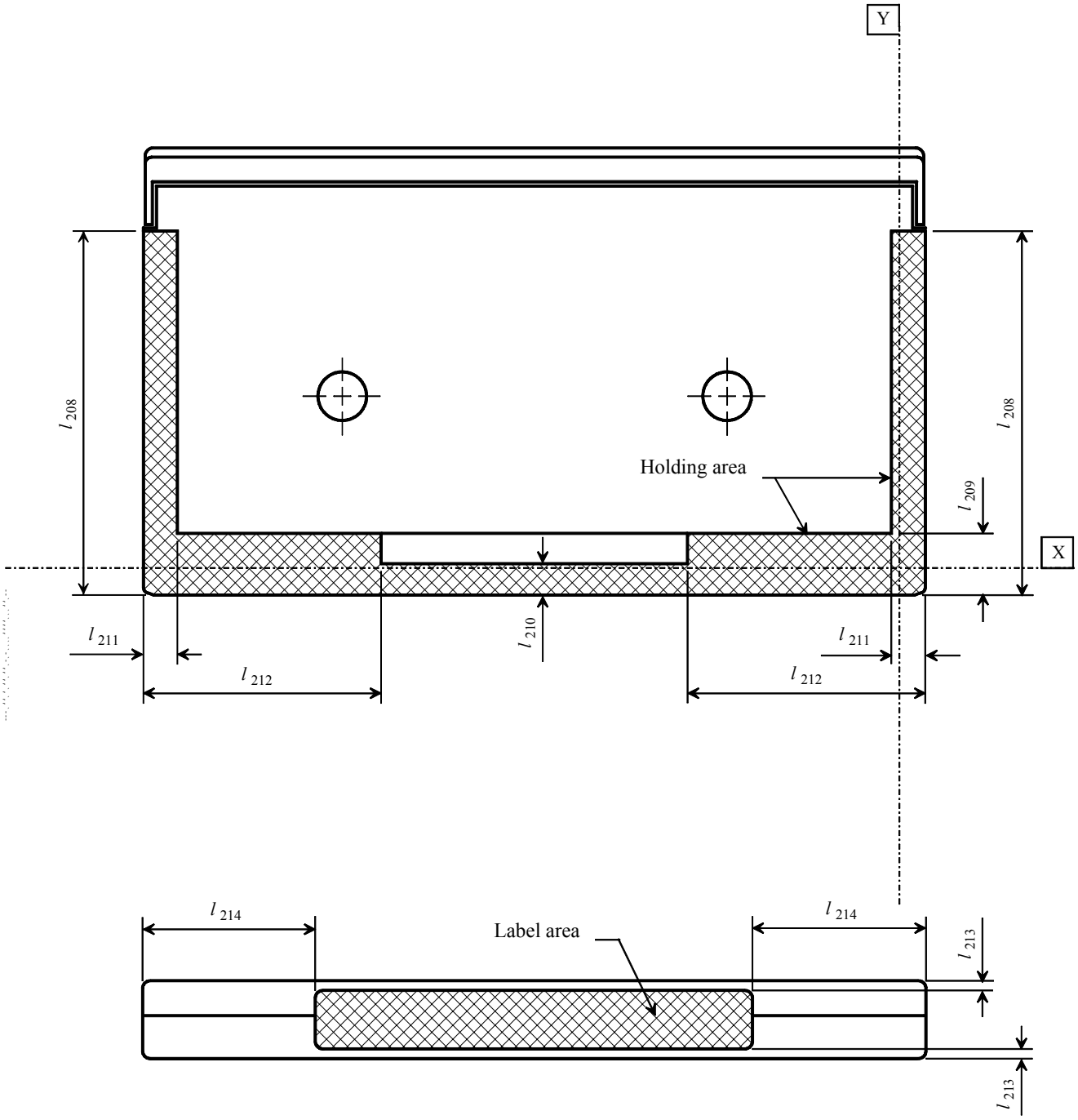

Figure 23 — Top side of Type L cassette, holding and label areas

© ISO/IEC 2001 – All rights reserved
Copyright International Organization for Standardization
Provided by IHS under license with ISO
No reproduction or networking permitted without license from IHS
Not for Resale

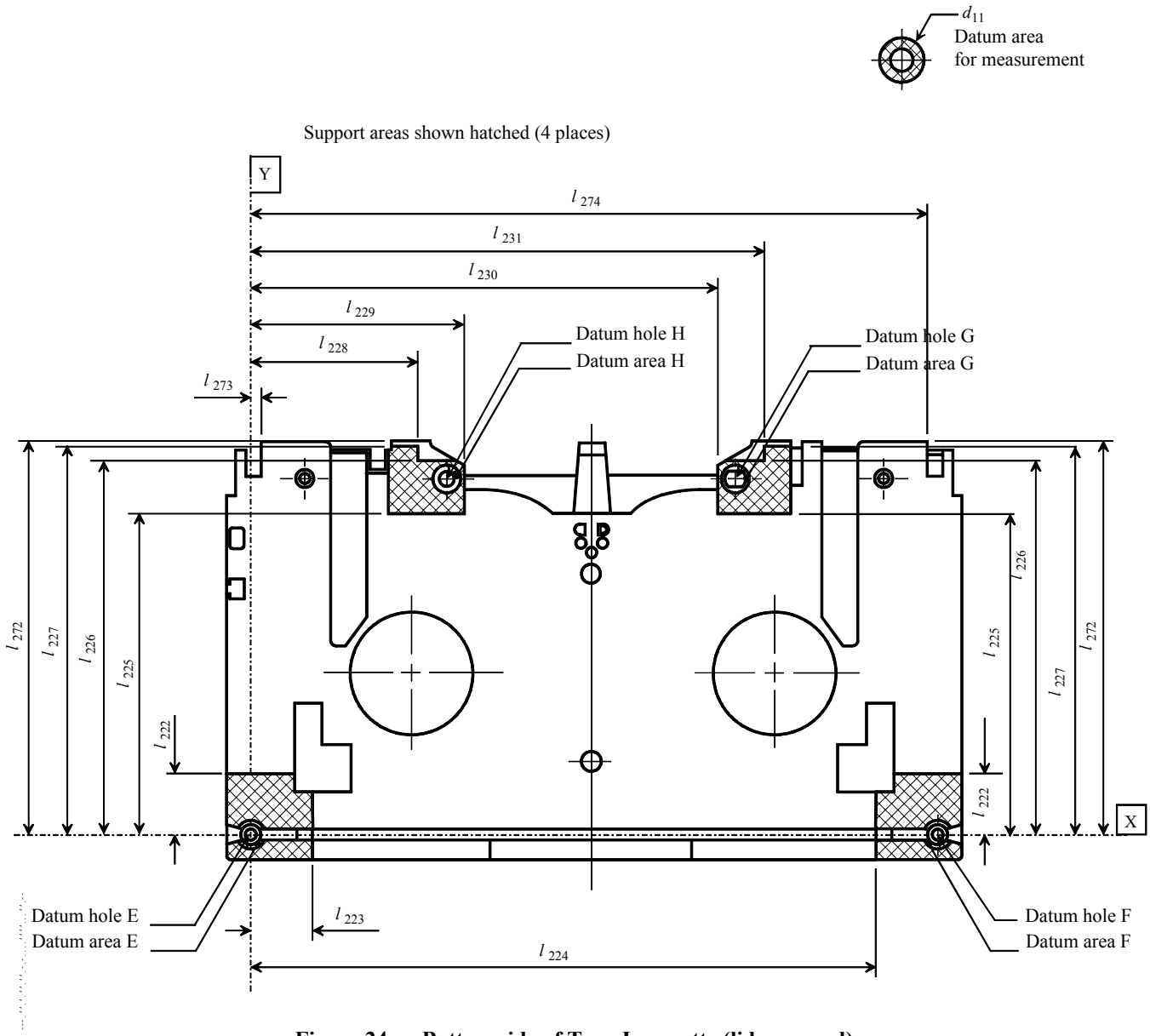

Figure 24 — Bottom side of Type L cassette (lid removed)

Copyright International Organization for Standardization
Provided by IHS under license with ISO
No reproduction or networking permitted without license from IHS
Not for Resale
© ISO/IEC 2001 – All rights reserved

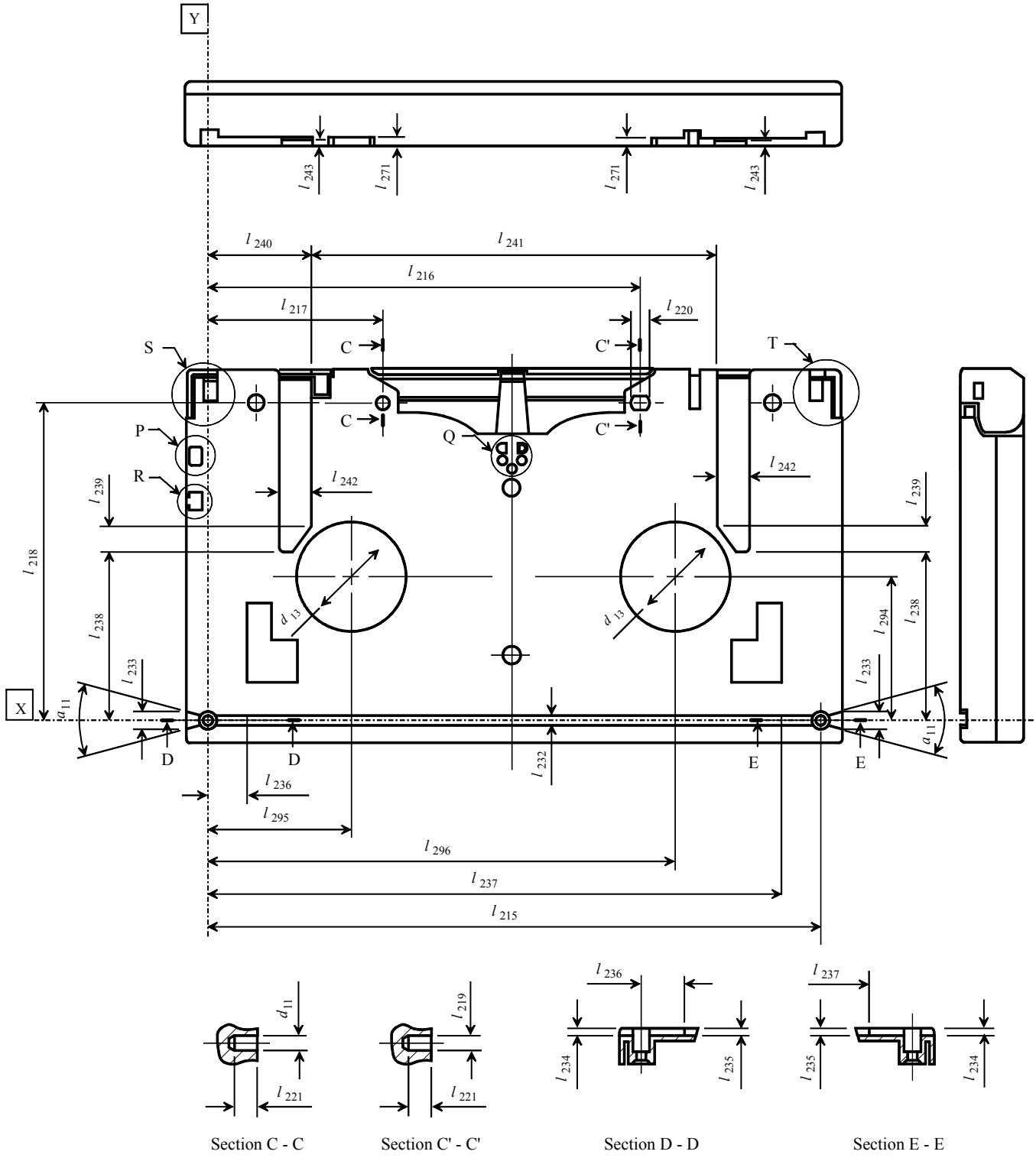

Figure 25 — Bottom side of Type L cassette (lid closed)

© ISO/IEC 2001 – All rights reserved
Copyright International Organization for Standardization
Provided by IHS under license with ISO
No reproduction or networking permitted without license from IHS
Not for Resale

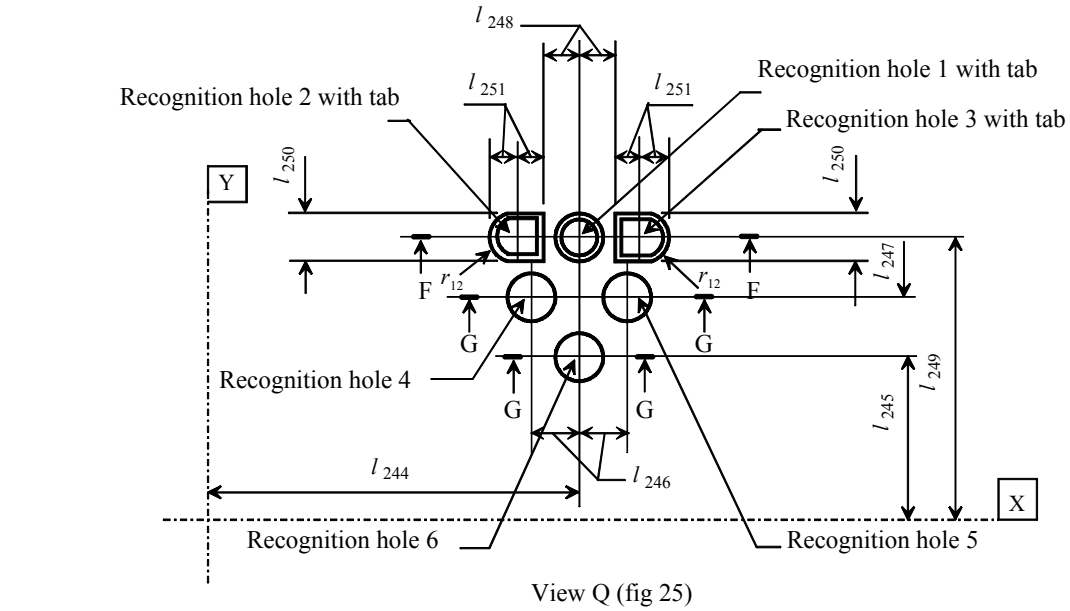

View Q (fig 25)

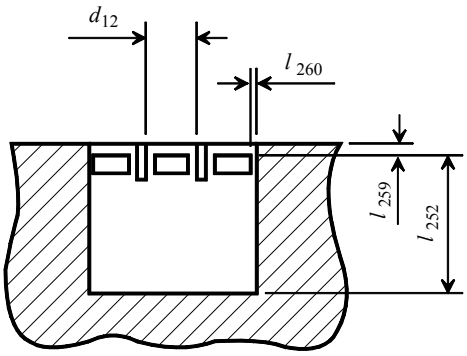

Section F - F

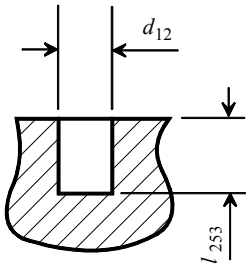

Section G - G

Recognition holes 1 - 6

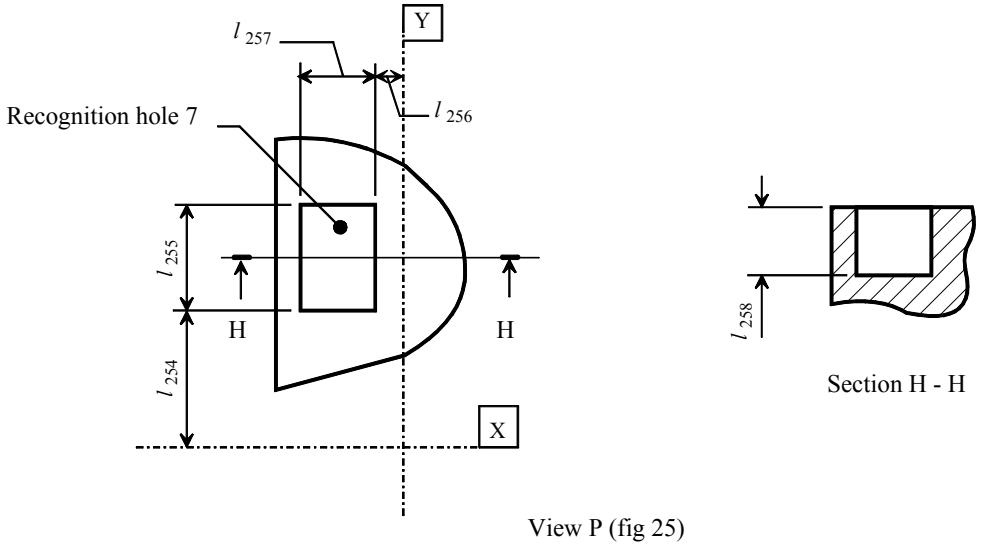

Section H - H

View P (fig 25)

Figure 26 — Details of recognition holes of Type L cassette

© ISO/IEC 2001 – All rights reserved
Copyright International Organization for Standardization
Provided by IHS under license with ISO
No reproduction or networking permitted without license from IHS
Not for Resale

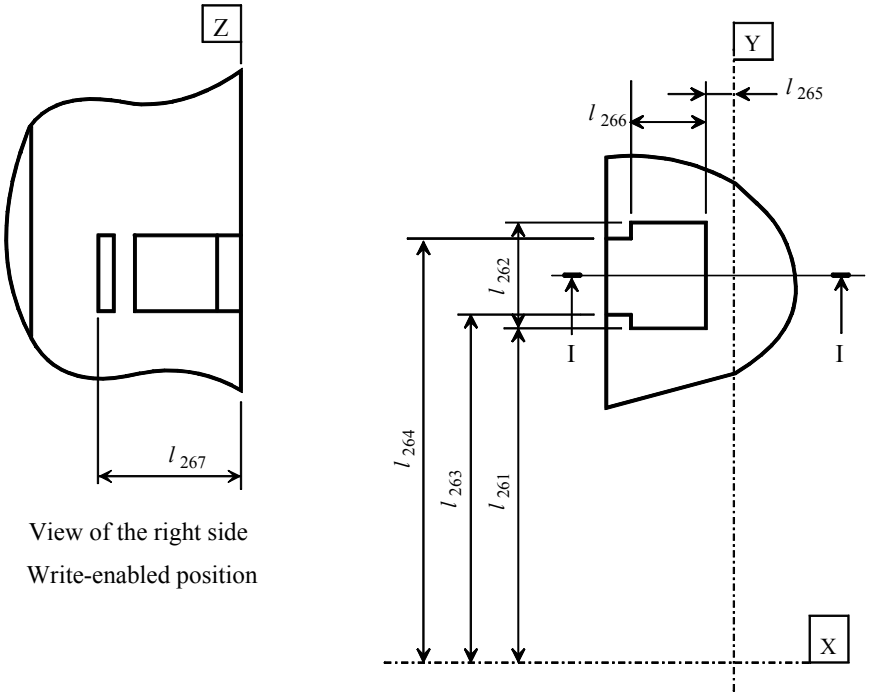

View of the right side
Write-enabled position

View R (fig 25)

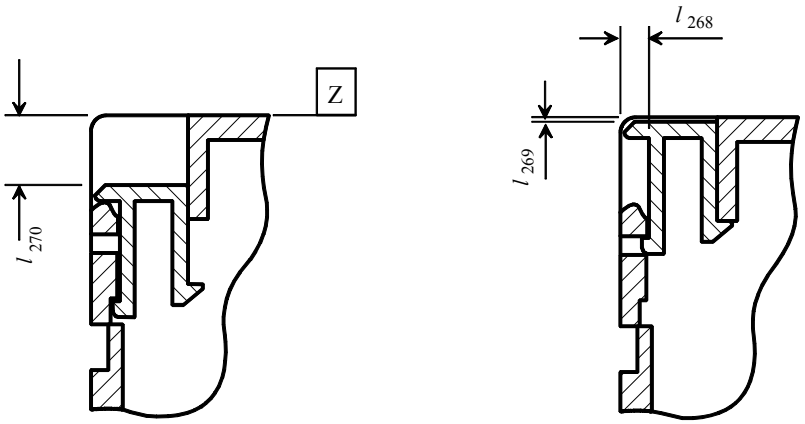

Write-inhibited position Write-enabled position

Section I - I

Figure 27 — Details of write-inhibit plug of Type L cassette

--`,,```,,,,````-`-`,,`,,`,`,,`---

© ISO/IEC 2001 – All rights reserved
Copyright International Organization for Standardization
Provided by IHS under license with ISO
No reproduction or networking permitted without license from IHS
Not for Resale

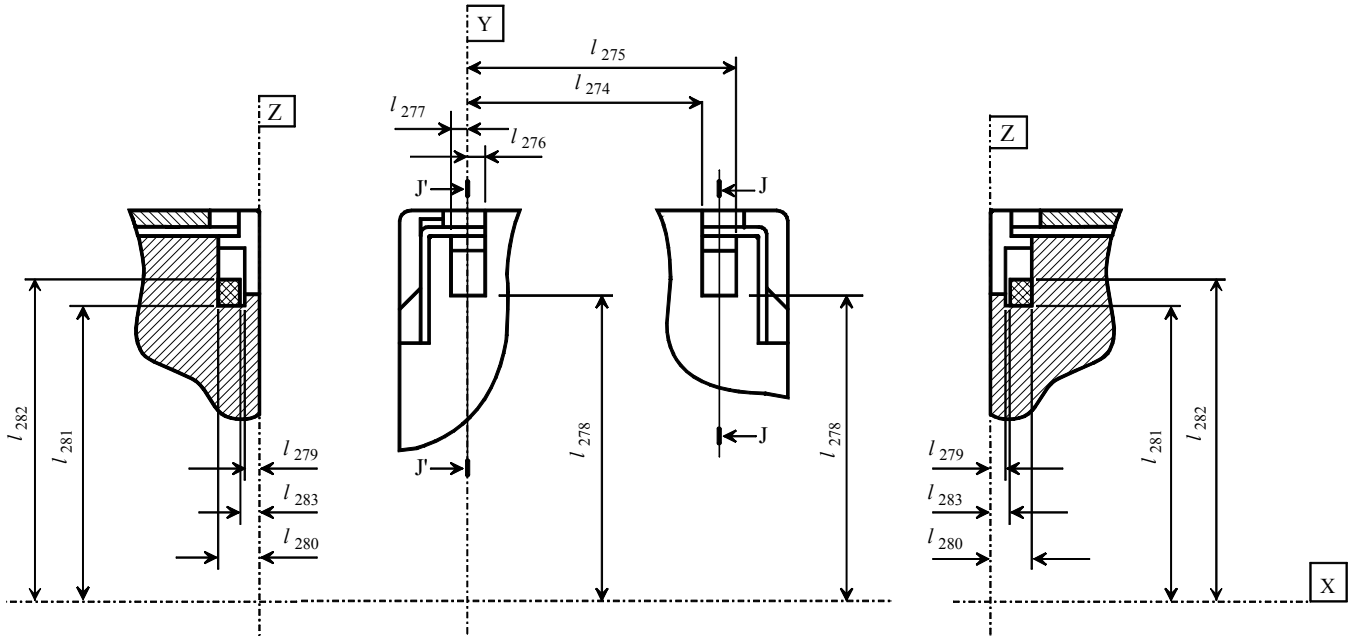

Figure 28 — Lid release insertion channel of Type L cassette

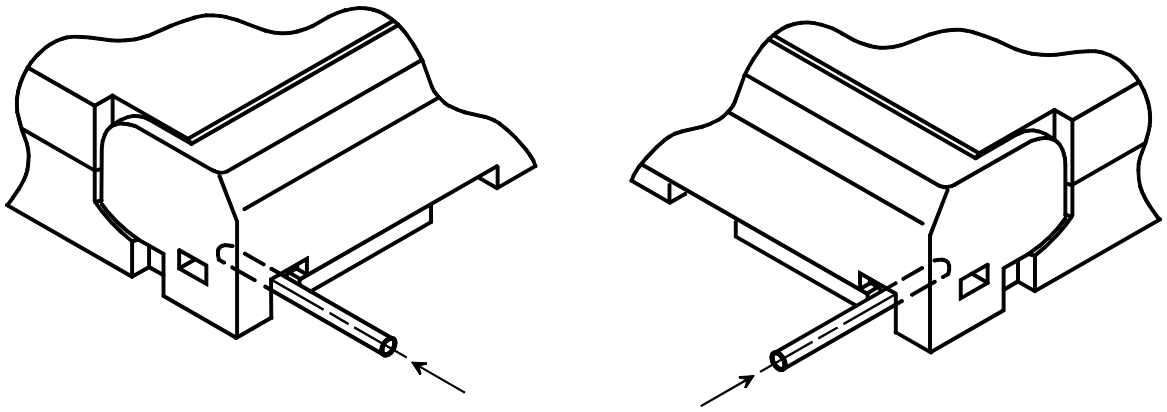

Figure 29 — Direction of force needed to unlock the lid with Type L cassette

Copyright International Organization for Standardization
Provided by IHS under license with ISO
No reproduction or networking permitted without license from IHS
Not for Resale
© ISO/IEC 2001 – All rights reserved

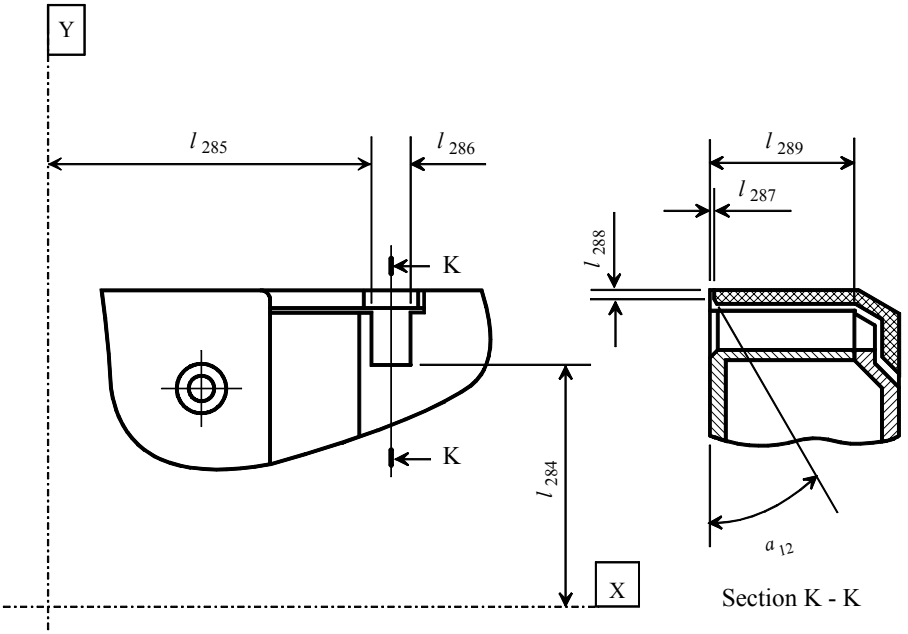

Figure 30 — Lid opening insertion channel of Type L cassette

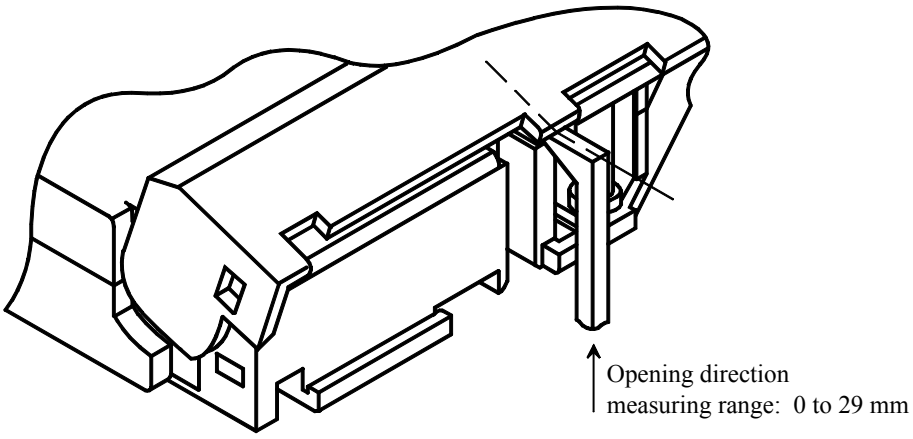

Figure 31 — Direction of force needed to open the lid with Type L cassette

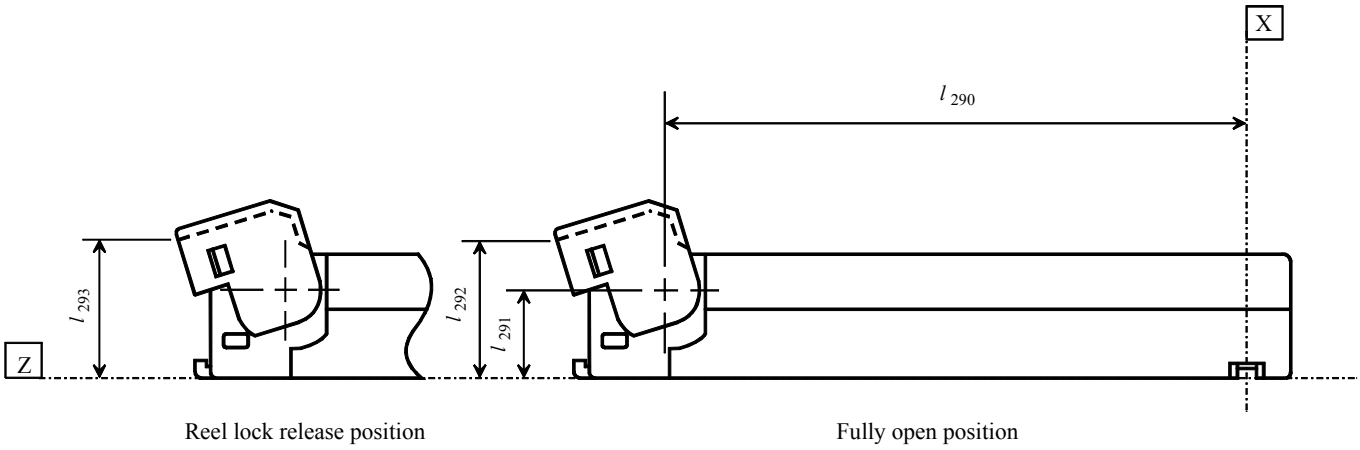

Figure 32 — Side view of Type L cassette (lid open)

© ISO/IEC 2001 — All rights reserved
Copyright International Organization for Standardization
Provided by IHS under license with ISO
No reproduction or networking permitted without license from IHS
Not for Resale

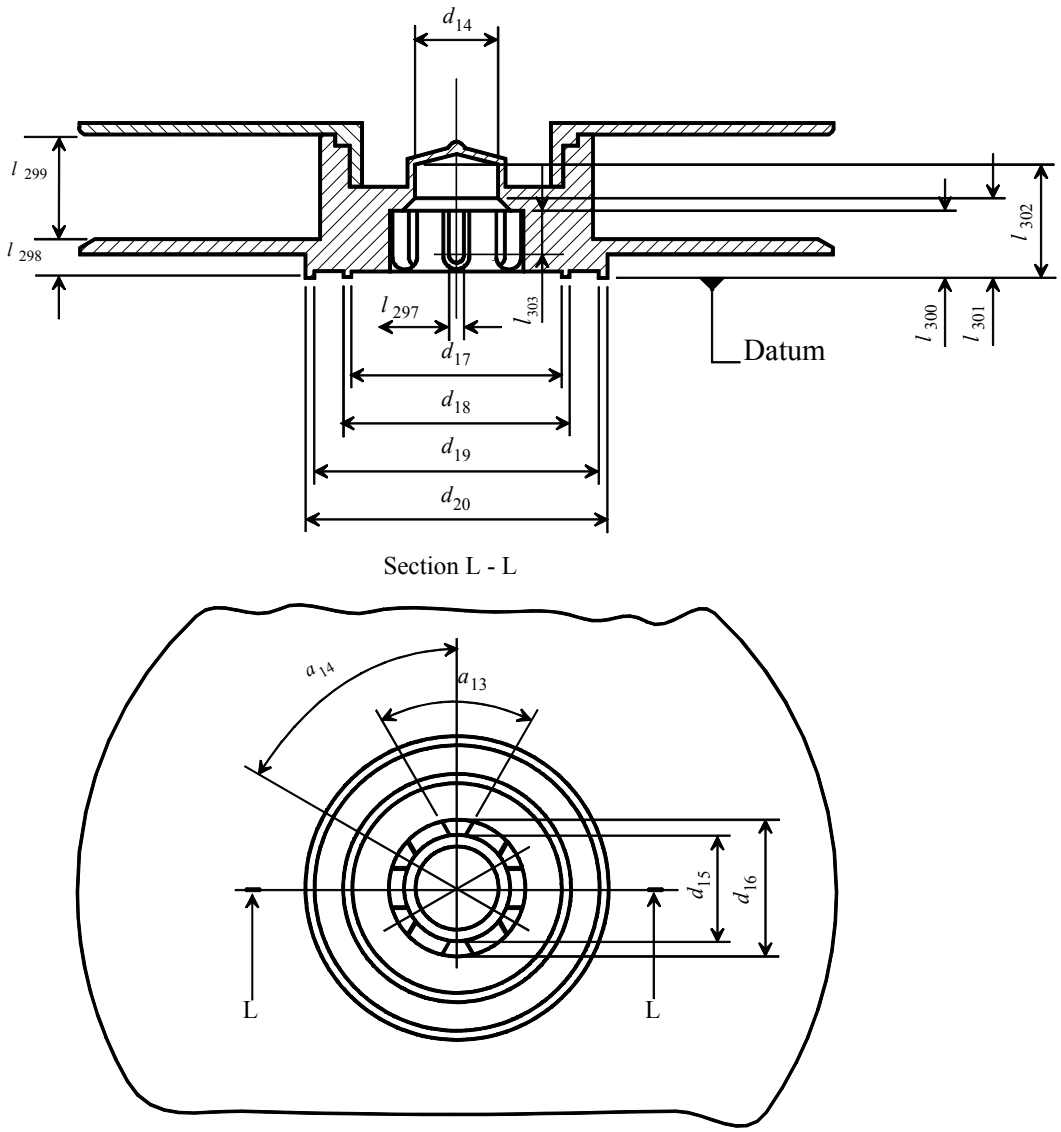

Figure 33 — Cassette reel of Type L cassette

© ISO/IEC 2001 – All rights reserved
Copyright International Organization for Standardization
Provided by IHS under license with ISO
No reproduction or networking permitted without license from IHS
Not for Resale

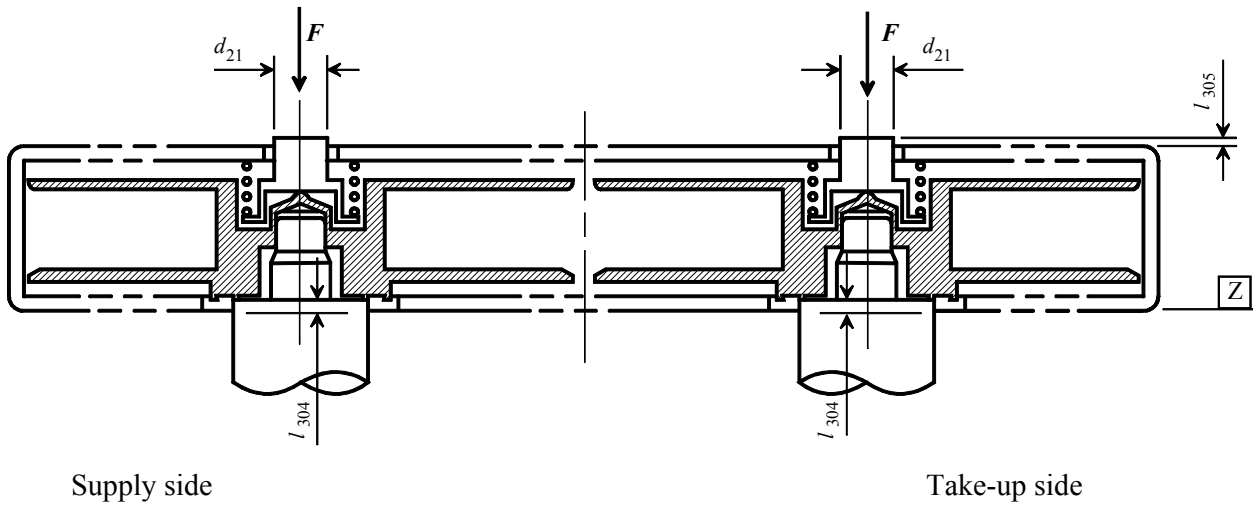

Figure 34 — Height of the reels of Type L cassette when loaded

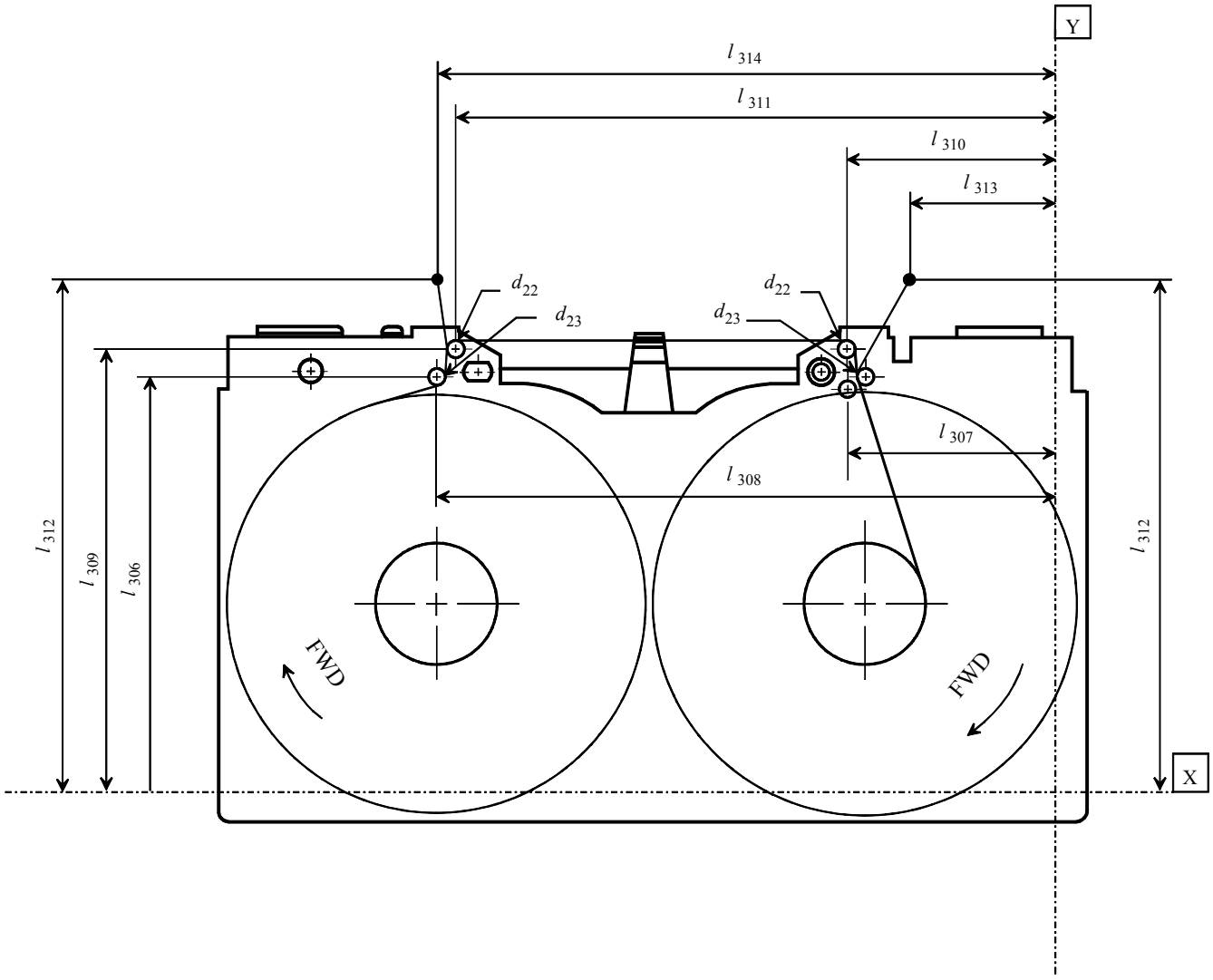

Figure 35 — Internal tape path of Type L cassette

© ISO/IEC 2001 – All rights reserved
Copyright International Organization for Standardization
Provided by IHS under license with ISO
No reproduction or networking permitted without license from IHS
Not for Resale

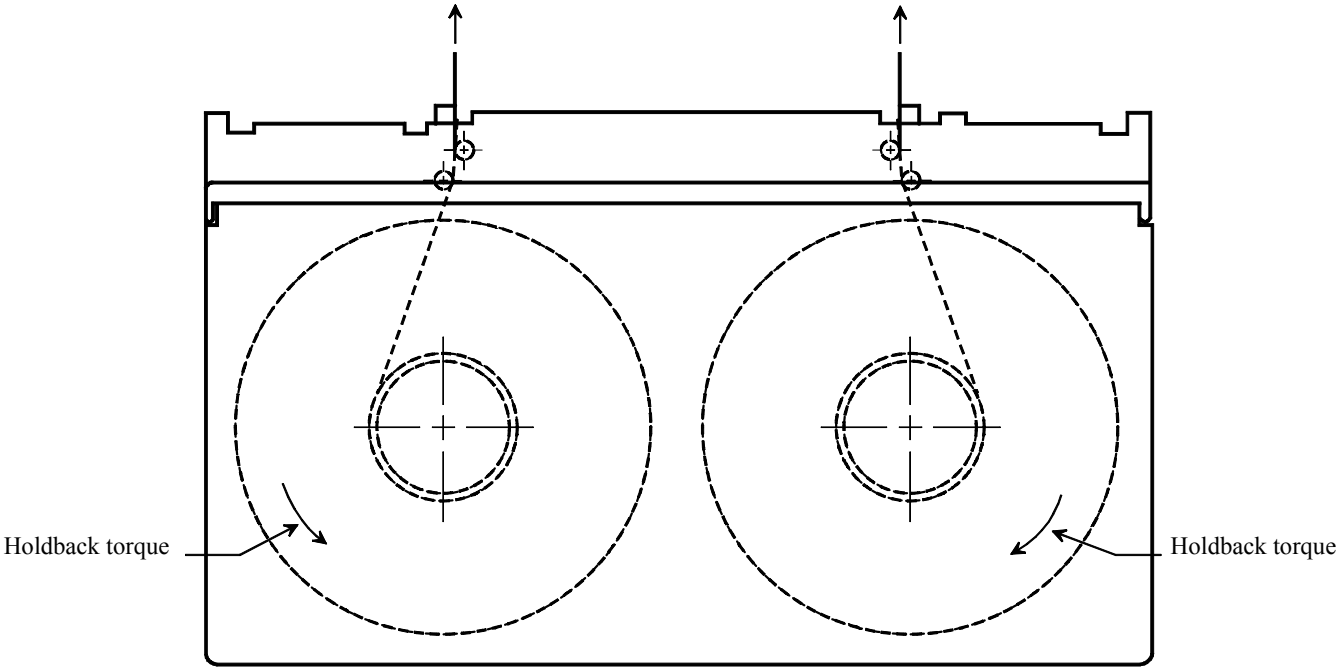

Figure 36 — Tape path to measure the extraction force of Type L cassette

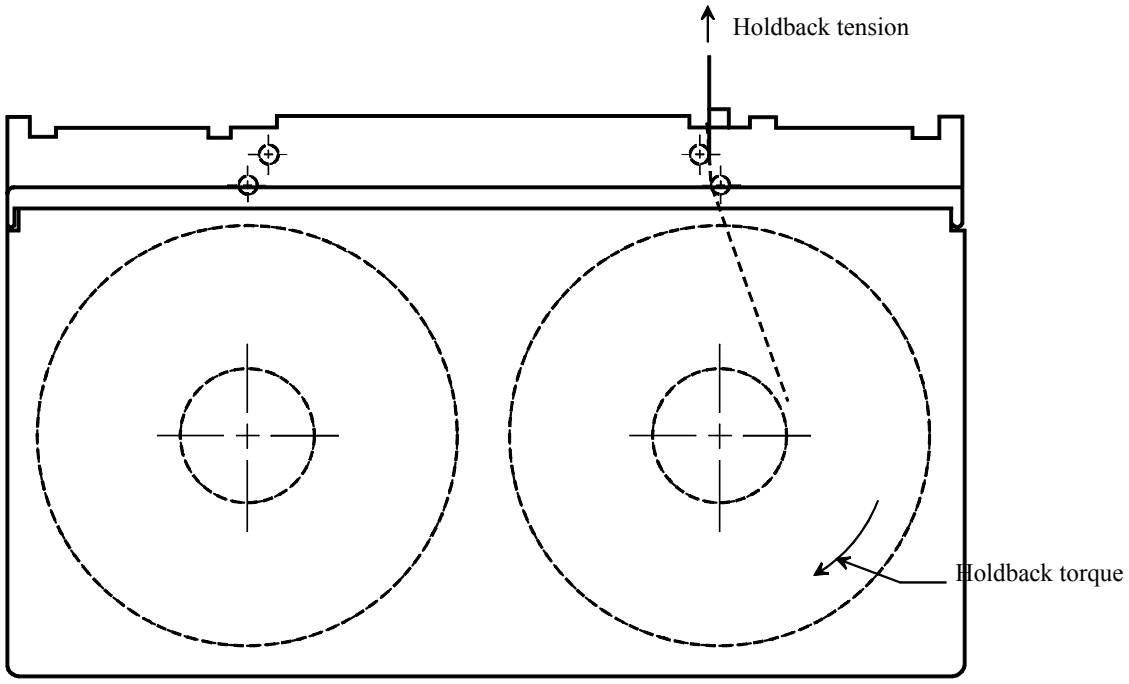

Figure 37 — Tape path to measure the frictional torque of the take-up reel of Type L cassette

© ISO/IEC 2001 – All rights reserved
Copyright International Organization for Standardization
Provided by IHS under license with ISO
No reproduction or networking permitted without license from IHS
Not for Resale

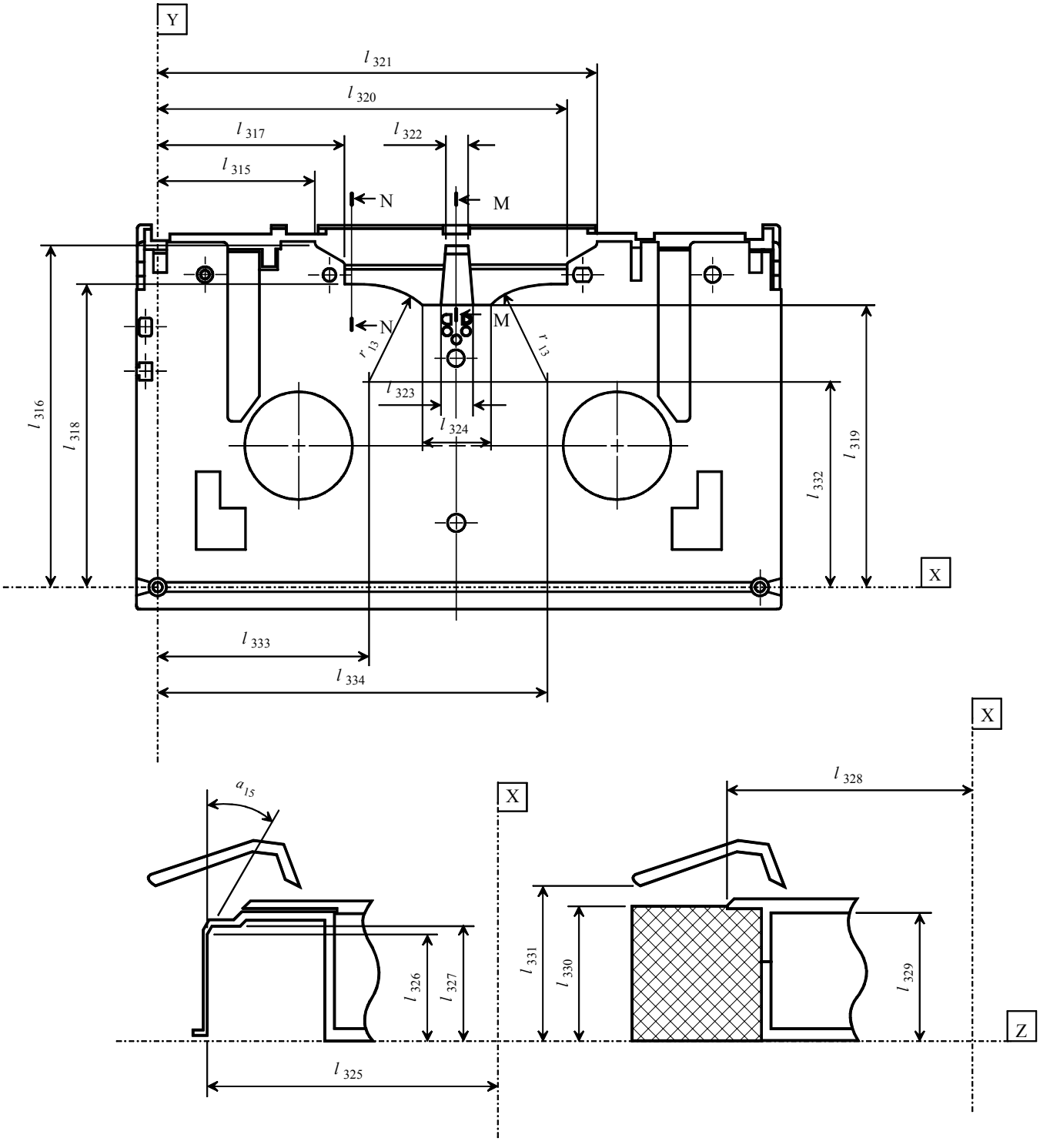

Section M - M Section N - N

Figure 38 — Tape access cavity of Type L cassette

© ISO/IEC 2001 – All rights reserved
Copyright International Organization for Standardization
Provided by IHS under license with ISO
No reproduction or networking permitted without license from IHS
Not for Resale

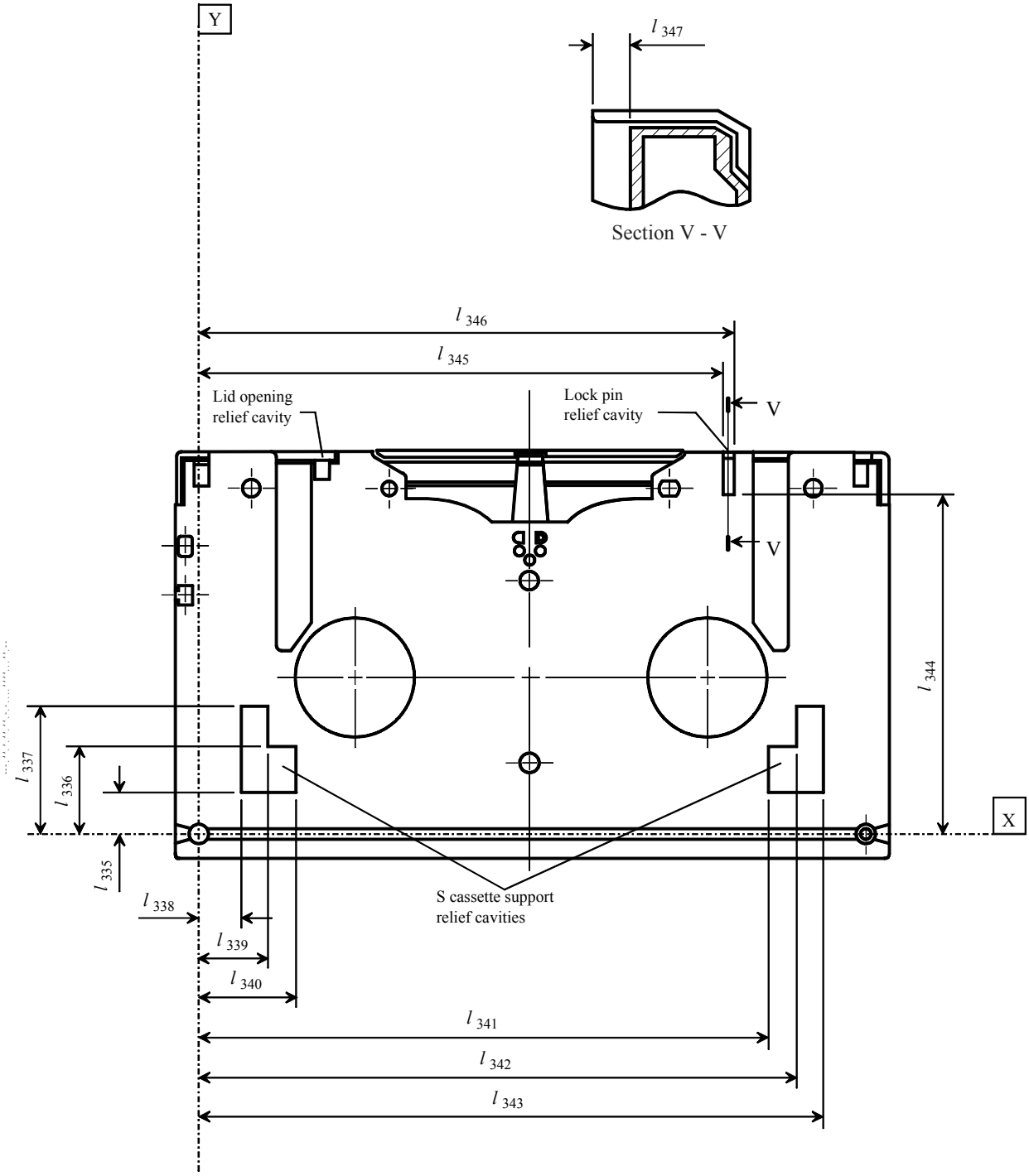

Figure 39 — Bottom side of Type L cassette (lid closed)

© ISO/IEC 2001 – All rights reserved
Copyright International Organization for Standardization
Provided by IHS under license with ISO
No reproduction or networking permitted without license from IHS
Not for Resale

Section 3 - Requirements for the unrecorded tape

9 Mechanical, physical and dimensional characteristics of the tape

9.1 Materials

The recordable area of the tape shall consist of a polyethylene terephthalate base material (or equivalent) coated on one side with a strong yet flexible layer of ferromagnetic material dispersed in a suitable binder. The back surface may be coated.

The leader tape and trailer tape shall contain a metal foil providing more than 200 S conductivity per square so that the magnetic tape motion can be stopped when the foil is detected.

9.2 Tape length

The length of magnetic tape between PBOT and PEOT shall be in the range

For Type S : between 290 m and 292 m

For Type L : between 890 m and 892 m

The lengths of leader and trailer tapes shall be the lengths between the splice points and the outside of the case when attached to the hubs.

Leader tape length shall be in the range

For Type S : between 220 mm and 280 mm

For Type L : between 260 mm and 300 mm

Trailer tape length shall be in the range

For Type S : between 50 mm and 80 mm

For Type L : between 70 mm and 100 mm

9.3 Tape width

The width of the magnetic tape shall be 12,650 mm ± 0,005 mm, l_{348} in Figure 52.

The width of the leader tape and trailer tape shall be 12,65 mm ± 0,03 mm.

Procedure for measuring the width of the magnetic tape.

1) Cover a section of the tape with a glass microscope slide
2) Measure the width with no tension applied to the tape, using a calibrated microscope, profile projector, or equivalent, having an accuracy of at least 1 μm.
3) Repeat the measurement at five or more different points along a length of tape of 1,0 m min.
4) The tape width is the average of the widths measured.

9.4 Width and position of splicing tape

The width of the splicing tape and its position across the width of the leader/trailer and magnetic tapes shall be such that the bottom edge of the splicing tape shall be no more than 0,60 mm max above the bottom edge of the other tapes and the top edge of the splicing tape shall be no more than 0,60 mm max below the top edge. Neither edge of the splicing tape shall extend beyond the edges of the leader/trailer and magnetic tapes.

9.5 Discontinuity

There shall be no discontinuities in the tape between the PBOT and PEOT, such as those produced by tape splicing or perforations.

9.6 Tape thickness

The total thickness of the magnetic tape shall be between 10,2 μm and 11,2 μm.

The thickness of the leader and trailer tapes shall be 45 μm max.

9.7 Longitudinal curvature

The radius of curvature of the edge of the magnetic tape shall be 50 m min.

© ISO/IEC 2001 – All rights reserved

Copyright International Organization for Standardization
Provided by IHS under license with ISO
No reproduction or networking permitted without license from IHS
Not for Resale

Procedure for measuring the longitudinal curvature of tape.

1) Allow a 1,0 m length of the tape to unroll and assume its natural curvature on a flat smooth surface.

2) Measure the deviation from a 1,0 m chord.

The deviation shall not be greater than 2,5 mm. This deviation corresponds to the minimum radius of curvature of 50 m if measured over an arc of a circle.

9.8 Out-of-plane distortions

All visual evidence of out-of-plane distortion shall be removed when the magnetic tape is subjected to a uniform tension of 0,31 N ± 0,05 N.

Out-of-plane distortions are local deformation which cause portions of the tape to deviate from the plane of the surface of the tape. They are most readily observed when the tape is lying on a flat surface and under no tension.

9.9 Coating adhesion

The force required to peel any part of the coating from the tape base material shall not be less than 0,1 N.

Procedure

1) Take a test piece of the tape approximately 380 mm long and scribe a line through the recording coating across the width of the tape 125 mm from one end.

2) Using a double-sided pressure sensitive tape, attach the full width of the test piece to a smooth metal plate, with the recording surface facing the plate, as shown in Figure 40.

3) Fold the test piece over 180°, attach the metal plate and the free end of the test piece to the jaws of a universal testing machine and set the speed of jaw separation to 254 mm/min.

4) Note the force at which any part of the coating first separates from the base material. If this is less than 0,1 N, the tape has failed the test. If the test piece peels away from the double-sided pressure sensitive tape before the force exceeds 0,1 N, an alternative type of double-sided pressure sensitive tape shall be used.

5) If the back surface of the tape is coated, repeat 1) to 4) for the back coating.

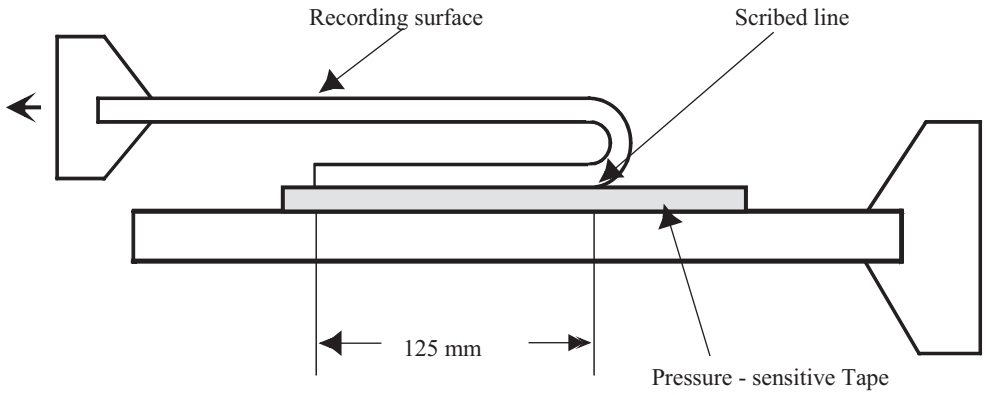

Figure 40 — Measurement of coating adhesion

© ISO/IEC 2001 – All rights reserved
Copyright International Organization for Standardization
Provided by IHS under license with ISO
No reproduction or networking permitted without license from IHS
Not for Resale

9.10 Layer-to-layer adhesion

There shall be no tendency for the test piece to stick or for the coating to peel.

Procedure

1) Attach one end of a test piece of magnetic tape of length 1,0 m to the surface of a glass tube of external diameter 36 mm.
2) Wind the test piece on to the tube at a tension of 0,9 N.
3) Store the wound test piece in a temperature of 45 °C ± 3 °C and a relative humidity of 80% for 4 h.
4) Store for a further 24 h in the Testing Environment.
5) Apply a force of 0,1 N to the free end of the test piece and allow it to unwind slowly.

9.11 Tensile strength

The measurements shall be made in accordance with ISO/527-1. The length of the test piece shall be 200 mm. The rate of elongation for all tensile tests shall be 100 mm/min - ISO/527-1, rate D.

9.11.1 Breaking strength

Load the test piece until the breaking point of the test piece is reached. The force required to reach that point is the breaking strength of the tape.

The breaking strength of magnetic tape shall be 38 N min.

The breaking strength of leader and trailer tapes shall be 50 N min.

9.11.2 Yield strength

The tensile yield force shall be taken as the force required to elongate the sample by 5%.

The tensile yield strength of the magnetic tape shall be 15 N min.

The tensile yield strength of the leader and trailer tapes shall be 30 N min.

9.11.3 Strength of splice

The spliced portion of the magnetic tape and the leader and trailer tapes shall withstand a tension of TBD N min.

9.12 Residual elongation

The residual elongation, expressed as a percentage of the original length, shall be 0,20 % max.

Measure the initial length of a test piece of approximately 1 m with an applied tensile force of 0,2 N max.

For 10 minutes, apply an additional force of 10 N.

Remove the additional force and measure the length after a further 10 minutes.

9.13 Electrical resistance of the coated surfaces

The electrical resistance of the recording surface of the magnetic tape, measured on any square area of tape, shall be less than

$1 \times 10^{12}\ \Omega$ for a back-coated tape.

The electrical resistance of the back-coating, if present, measured on any square area of tape, shall be less than

$5 \times 10^{7}\ \Omega$.

Procedure (see Figure 41)

1) Condition a test piece of tape in the test environment for 24 h.
2) Position the test piece over two 24-carat gold-plated, semicircular electrodes having a radius $r = 25{,}4$ mm and a finish of at least N4, so that the recording surface is in contact with each electrode. The electrodes shall be placed parallel to the ground and parallel to each other at a distance $d = 12{,}65$ mm between their centres.
3) Apply the force of 1,62 N to each end of the test piece.
4) Apply a DC voltage of 50 V ± 10 V across the electrodes and measure the resulting current flow. From this value, determine the electrical resistance.
5) Repeat for a total of five positions along the test piece and average the five resistance readings.

© ISO/IEC 2001 – All rights reserved

Copyright International Organization for Standardization
Provided by IHS under license with ISO
No reproduction or networking permitted without license from IHS
Not for Resale

For back-coated tape repeat the procedure with the back-coating in contact with the electrodes.

When mounting the test piece ensure that no conducting paths exist between the electrode except that through the coating under test.

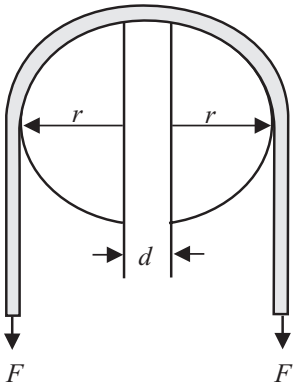

93-0050-B

Figure 41 — Measurement of electrical resistance

9.14 Tape wind

The magnetic recording surface of the tape shall face outward from the case and reels.

10 Magnetic recording characteristics

The requirements for the helically recorded tracks are more demanding than those for the longitudinal tracks; it is deemed to be sufficient to carry out tests on the helically recorded tracks only.

The magnetic recording performance is defined by the testing requirements given in the following clauses.

The positive azimuth tracks shall be used: tracks A, C, E and G.

When performing the tests, the head output or the resultant signal shall be measured on the same relative pass for both a tape calibrated to the MSRT and the tape under test (read-while-write, or on equipment without read-while-write capability, on the first forward pass) on the same equipment.

The following conditions shall apply to all tests of magnetic recording performance, unless otherwise stated:

–	tape condition	:	a.c. erased to 2 % or less of the SRA
–	head/tape speed	:	13,43 m/s ± 0,05 m/s
–	head width (write)	:	23,0 µm ± 1,5 µm
	(read)	:	30,0 µm ± 1,5 µm
–	gap azimuth (+)	:	+15,450 ° ± 0,167 °
	(-)	:	-15,350 ° ± 0,167 °
–	gap length (write)	:	0,30 µm ± 0,05 µm
	(read)	:	0,15 µm ± 0,05 µm
–	tape tension	:	0,196 N ± 0,029 N
–	recording current	:	TRC1

10.1 Typical Field (TF1)

TF1 shall be between 80 % and 120 % of RF1.

Traceability to the RF1 is provided by the calibration factors supplied with each SSRT.

© ISO/IEC 2001 – All rights reserved
Copyright International Organization for Standardization
Provided by IHS under license with ISO
No reproduction or networking permitted without license from IHS
Not for Resale

10.2 Average Signal Amplitude(ASA)

The ASA at the physical recording density of 6 349 ftpmm shall be between 80 % and 120 % of SRA1.

Traceability to SRA1 is provided by the calibration factors supplied with each SSRT.

10.3 Resolution

The ratio of the ASA at the physical recording density of 6 349 ftpmm to that at the physical recording density of 1 587 ftpmm shall be between 80 % and 120 % of the same ratio for the MSRT.

Traceability to the resolution of the MSRT is provided by the calibration factors supplied with each SSRT.

10.4 Signal-to-noise ratio (S/N)

The Signal-to-noise ratio is the average rms read signal amplitude divided by the average integrated rms noise amplitude, expressed in decibels.

$$S/N = 20 \log \frac{\text{Average rms read signal amplitude}}{\text{Average integrated rms noise amplitude}} \quad \text{dB}$$

Requirement:

The S/N for the tape under test (S/N_{tape}) shall be better than -2 dB relative to the S/N for the MSRT (S/N_{MSRT}) when measured according to the procedure defined in annex A.

Traceability to the (S/N_{MSRT}) is provided by the calibration factors supplied with each SSRT.

10.5 Ease of erasure

When a tape has been recorded at 1 587 ftpmm with TRC1 and passed through a longitudinal steady erasing field of 320 000 A/m, any remaining signal shall not exceed 2 % of SRA3.

10.6 Tape quality

10.6.1 Missing pulses

A missing pulse is a loss of read signal amplitude.

A missing pulse exists when the base-to-peak amplitude is 25 %, or less, of half the ASA for the physical recording density of 6 349 ftpmm on the same tape.

10.6.2 Missing pulse zone

A missing pulse zone commences with 7 consecutive missing pulses and ends when 28 consecutive flux transitions are read or when a length of 0,038 mm of track has been measured. If a missing pulse zone continues beyond 0,038 mm a further missing pulse zone shall be counted.

A missing pulse zone does not continue from one track to another.

Requirement:

The average missing pulse zone rate shall be less than one missing pulse zone for each 5 x 10^6 flux transitions recorded at the physical recording density of 6 349ftpmm.

The average missing pulse zone rate is the total number of missing pulse zones divided by the total number of flux transitions recorded on the tape.

10.7 Inhibitor tape

This International Standard does not specify parameters for assessing whether or not a tape is an inhibitor tape.

However, annex D gives further information on inhibitor tapes.

© ISO/IEC 2001 – All rights reserved

Copyright International Organization for Standardization
Provided by IHS under license with ISO
No reproduction or networking permitted without license from IHS
Not for Resale

Section 4 - Requirements for an interchanged tape

11 Format for helical tracks

11.1 General description of the write data path (see Figure 42)

The host system, operating under one of several directory file system structures, views the tape drive system as a logical storage system. The host expects the logical storage system to support the following capabilities

- data blocks as a minimum unit of data transfer
- data file as a concatenation of data blocks
- file demarcation
- directory of file locations in a volume
- management information of files
- multiple volumes

This format provides a generic set of placeholder tables and track types to contain such information with specific definitions of their usage and location. All track types provided by this format are processed into a Track-Set-pair comprising eight helical tracks, uniquely identified by a TSID, represent the minimum recorded and retrieved unit of information.

The processing of information preparatory to recording begins with the identification of the type of Logical Track Set to be created and proceeds through the following processes

- generation of a Logical Track Set
- data protection processing within product code array buffers
- formation of the contents of a helical track.

11.2 Formation of a Logical Track Set

11.2.1 Types of information track sets

There are 11 types of information track sets.

1. Volume Set Information Table (VSIT) track set
2. Volume Information Table (VIT) track set
3. Badspot Table (BST) track set
4. Logical ID Table (LIDT) track set
5. File Information Table (FIT) track set
6. Update Table (UT) track set
7. User Data track set
8. File Mark track set
9. Set Mark track set
10. Dummy (DM) track set
11. End of Data (EOD) track set

This tape format supports multiple logical volumes within one physical volume.

A VSIT at the beginning of the tape contains information to manage one or more logical volumes on this tape. The VSIT has location information for each logical volume on the tape.

A logical volume consists of a Directory Information Table (DIT) followed by the User Data area.

The DIT contains information to locate and manage files within the logical volume and comprises the VIT, BST, LIDT, FIT and UT.

The demarcation of files may be defined by the host to be either a File Mark or a Set Mark and for some purposes of this International Standard may be collectively referred to as a Tape Mark (TM).

EOD Track Sets identify the end of recorded data area in a logical volume as indicated by the host.

DM Track Sets identify fill areas on the tape where continuous control track signals are required and are transparent to the host.

© ISO/IEC 2001 – All rights reserved
Copyright International Organization for Standardization
Provided by IHS under license with ISO
No reproduction or networking permitted without license from IHS
Not for Resale

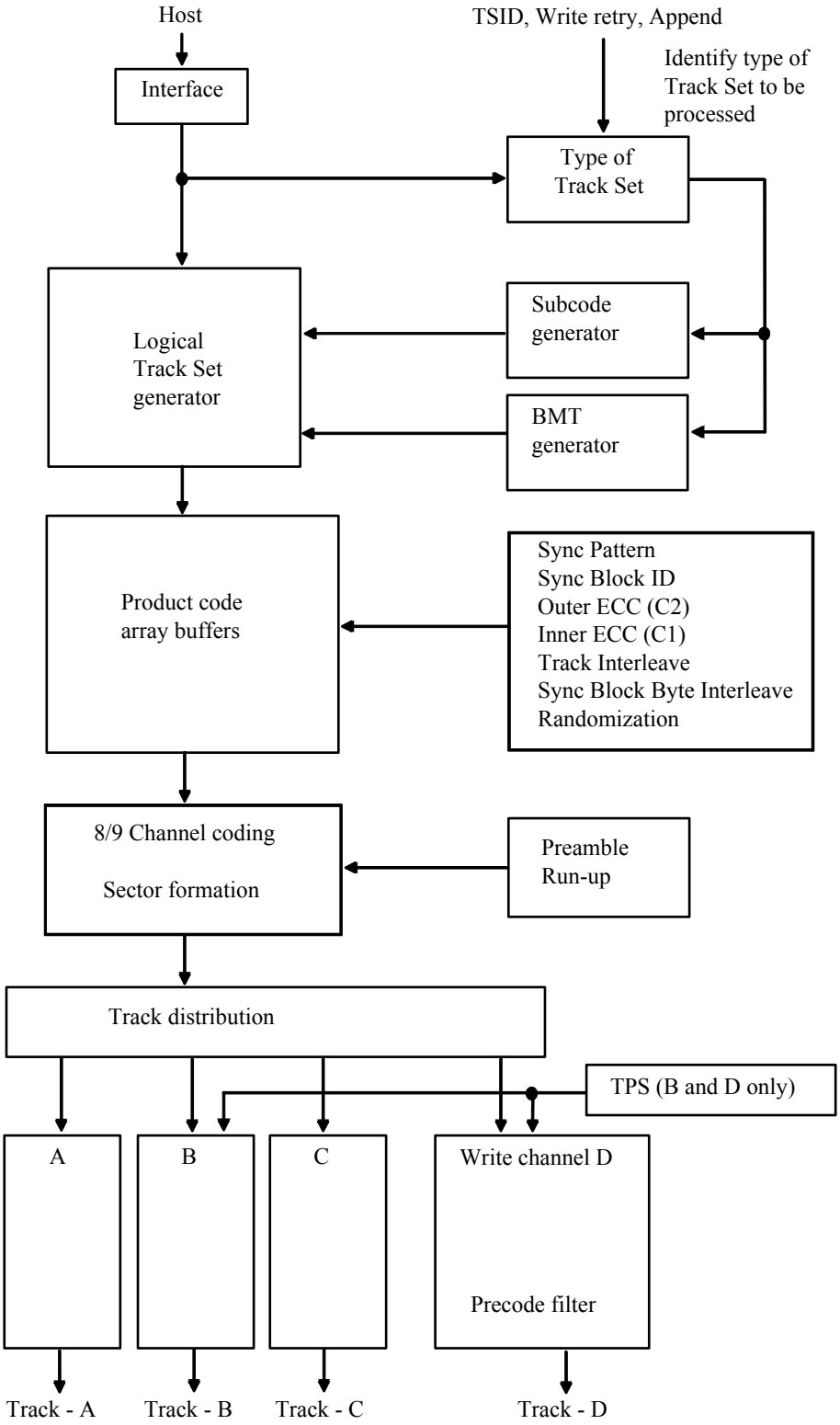

Figure 42 — Dataflow of record information processing

© ISO/IEC 2001 – All rights reserved
Copyright International Organization for Standardization
Provided by IHS under license with ISO
No reproduction or networking permitted without license from IHS
Not for Resale

11.2.2 Generation of a Logical Track Set

The structure of a Logical Track Set is shown in Figure 43. A Logical Track Set shall contain all of the elements destined for 4 helical tracks and occupy 234 080 bytes (58 520 words). Logical Track Set Words will be used for the following field definitions.

The Logical Track Set comprises

Word 0 - A tape format identifier which shall be set to (FFFF0001), the format of this International Standard.
Words 1 to 34 - A Subcode data field containing administrative information associated with this Track Set.
Words 35 to 58 515 - An Information field and Block Management Table (BMT).
The BMT contains the data block information for the contents of the Information Field.
The BMT is located within the Information Field.

The Logical Track Set is terminated with

Words 58 516 to 58 518 - Reserved set to all ZEROs
Word 58 519 - An end code of 4 bytes which shall be set to (0F0F0F0F).

The information in a Logical Track Set is processed in 16 product code arrays.

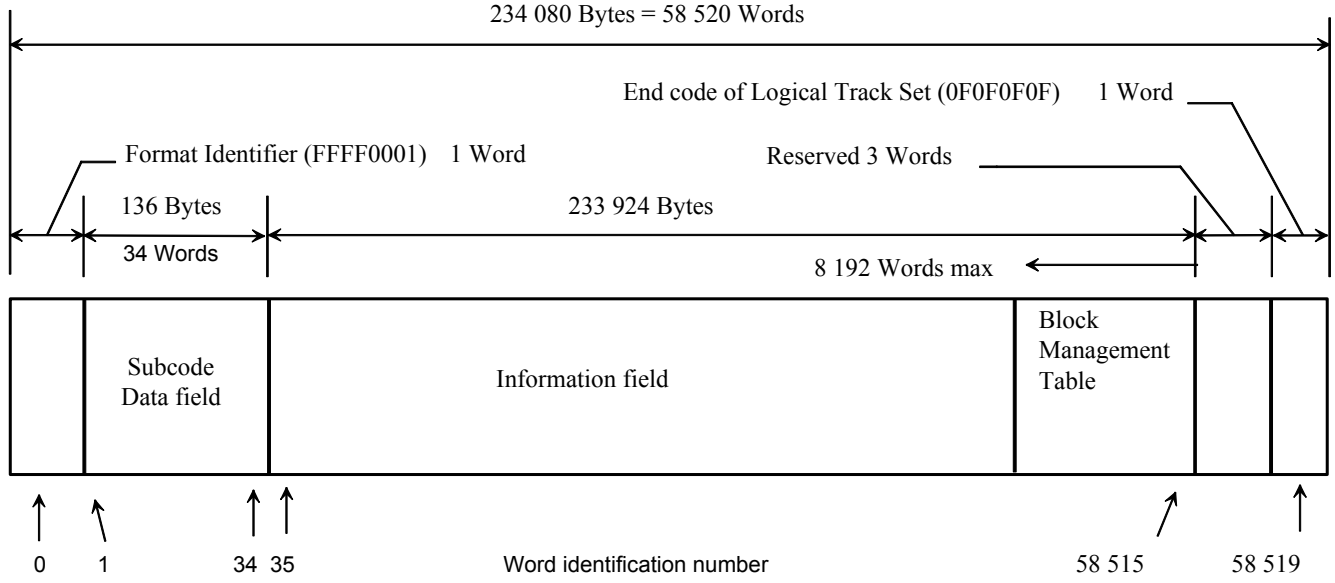

Figure 43 — Logical Track Set

11.2.3 Subcode data field

The Subcode data field shall contain the following information associated with this Logical Track Set.

The Subcode shall consist of 34 Words, and contain the following information.

Word 1 Track Set Type Identifiers (TSID)

Word 1 shall be set to the following bit patterns (TSID) to identify the different types of Track Set.

- The Volume Set Information Table (VSIT) shall be identified by (00FFFFFF)
- The Volume Information Table (VIT) shall be identified by (00FFFF00)
- The Bad Spot Table (BST) shall be identified by (FF00FF00)
- The Logical ID Table (LIDT) shall be identified by (FFFF0000)
- The File Information Table (FIT) shall be identified by (00FF00FF)
- The Update Table (UT) shall be identified by (00FF0000)

© ISO/IEC 2001 – All rights reserved
Copyright International Organization for Standardization
Provided by IHS under license with ISO
No reproduction or networking permitted without license from IHS
Not for Resale

- The User Track Set (User) shall be identified by (0000FFFF)
- The File Mark Track set (FM) shall be identified by (0000FF00)
- The Set Mark Track set (SM) shall be identified by (FF00FFFF)
- The Dummy Track Set (DM) shall be identified by (00000000)
- The End of Data Track Set (EOD) shall be identified by (000000FF)

Word 2 Logical Track Set Count

Word 2 shall be the count of all Logical Track Sets from the LBOT, starting with 1 for the first one and incremented by 1 for each Logical Track Set, except for Dummy Track Sets and EOD Track Sets.

The most significant bit of Word 2 shall be the Append Flag A.

This bit shall be set to ONE in the first Track Set of appended data
ZERO in all other Track Sets (See also 18.2 and Figure 58)

Word 3 File number

Word 3 shall be a count of the number of files, starting with 1. It shall be increased by 1 for each file of the logical volume.

Word 4 Data Block Count

In User Track Sets, Word 4 shall specify the number of data blocks of the Track Set, i.e. the number of Block Management Tables (BMT) entries.

In all other Track Sets, Word 4 shall be set to (00000001)

Word 5 Unique Identification Number (UID) of a Logical Volume

In User Track Sets, File Mark Sets, Set Mark Sets, Dummy Track Sets and EOD Track Sets, Word 5 shall be set to a Unique Identification Number (UID) for the logical volume assigned by the initialization process.

In all other Track Sets, Word 5 shall be set to (00000000).

Word 6 Count of Overwrites of a Logical Volume

Word 6 shall be a count of the number of times a logical volume has been overwritten in each of the User Track Set, File Mark Track Set, Set Mark Track Set, Dummy Track Set and End of Data Track Set.

In all other Track Sets, Word 6 shall be set to (00000000).

Word 7 Count of Write Retries

Bits 0 to 30 shall be a count of the number of times, starting with 1, that a write retry has taken place in a logical volume.

Bit 31 shall be the Retry Flag W.

This bit shall be set to ONE in the first Track Set of rewritten data
ZERO in all other Track Sets

Word 8 and 9 Drive Vendor Unique ID

Words 8 and 9 are intended for the specification of a unique drive vendor identifier. This International Standard does not define the format of this information, except by specifying that Word 8 shall consist of bytes 0 to 3 and Word 9 of bytes 4 to 7. If Words 8 and 9 are both set to (0000000), they indicate that no such identifier is specified. The interpretation of other settings requires agreement between the interchange parties.

Word 10 to 14 Logical volume number

Words 10 to 14 are intended for the specification of a logical volume number. This International Standard does not define the format of this information. If Words 10 to 14 are all set to (0000000) they indicate that no logical volume number is specified. The interpretation of other settings requires agreement between the interchange parties.

Word 15 Unique Identifier of the tape

Word 15 is intended for the specification of a Unique Identifier (UID) of the tape assigned by the initialization process. This International Standard does not define the format of this information. If Word 15 is set to (0000000) it indicates that no such identifier is specified. The interpretation of other settings requires agreement between the interchange parties.

© ISO/IEC 2001 – All rights reserved

Copyright International Organization for Standardization
Provided by IHS under license with ISO
No reproduction or networking permitted without license from IHS
Not for Resale

Word 16 Count of Overwrites of the Cassette

Word 16 is intended for the specification of a count of the total number of overwrite operations on the tape. This International Standard does not define the format of this information. If Word 16 is set to (00000000) it indicates that no such count is specified. The interpretation of other settings requires agreement between the interchange parties.

Word 17 Logical ID Table (LIDT) available

Word 17 shall be set to (FFFFFFFF) if a LIDT has been generated
(00000000) if no LIDT has been generated

Word 18 BMT for Block Search Operations

Word 18 shall be set to (FFFFFFFF) if the use of the BMT is effective for block search operations
(00000000) if the use of the BMT is not effective for block search operations

Word 19 Format Type

Word 19 shall be set to (00000005) to indicate that the format of the cassette is DTF-2 as specified by this International Standard.

Word 20 Creation Time

Word 20 is intended for the specification of a creation time. This International Standard does not define the format of this information. If Word 20 set to (0000000) it indicates that the creation time is not specified. The interpretation of other settings requires agreement between the interchange parties.

Word 21 Number of Mounts

Word 21 shall specify the number of mounts of the cassette, stating with 1. This number shall be increased by 1 for the cassette.

Word 22 Count of Read Retries

Word 22 shall be a count of the number of times, starting with 1, a read retry as taken place in the logical volume.

Word 23 Count of Recoveries

Word 23 shall be a count of the number of times, starting with 1, a recovery as taken place in the logical volume.

Word 24 Recovery Failures

Word 24 shall be set to (FFFFFFFF) if a recovery failure has occurred
(00000000) if no recovery failure has occurred

Word 25 to 34 Reserved

Words 25 to 34 shall be set to (00000000).

© ISO/IEC 2001 – All rights reserved
Copyright International Organization for Standardization
Provided by IHS under license with ISO
No reproduction or networking permitted without license from IHS
Not for Resale

Copyright International Organization for Standardization
Provided by IHS under license with ISO
No reproduction or networking permitted without license from IHS
© ISO/IEC 2001 – All rights reserved
Not for Resale

Table 1 — Word definition summary of subcode data fields

ID / Word / Contents	VSIT	DIT					USER	TM		DM	EOD
		VIT	BST	LIDT	FIT	UT		File Mark	Set Mark	Dummy	
1 Identification	(00FFFFFF)	(00FFFF00)	(FF00FF00)	(FFFF0000)	(00FF00FF)	(00FF0000)	(0000FFFF)	(0000FF00)	(FF00FFFF)	(00000000)	(000000FF)
2 Logical TSID	Increment by one for each track set and append file flag 'A'.									Not incremented	
3 File number	(FFFFFFFF)						File number			(FFFFFFFF)	
4 Number of BMT entries	(00000001)						Block number	(00000001)			
5 Initialization UID volume number	(00000000)						Initialization UID of this logical volume				
6 Overwrite count for volume	(00000000)						Overwrite count of this logical volume				
7 Write retry count	Write Retry Count and Write Retry Flag W.										
8 Vendor UID 0-3	(00000000), unless agreed otherwise between the interchange parties.										
9 Vendor UID 4-7	(00000000), unless agreed otherwise between the interchange parties.										
10-14 Logical volume number	(00000000), unless agreed otherwise between the interchange parties.										
15 Initialized UID. of tape	(00000000), unless agreed otherwise between the interchange parties.										
16 Overwrite count	(00000000), unless agreed otherwise between the interchange parties.										
17 LIDT use flag	(00000000) or (FFFFFFFF)										
18 Block operation type	(00000000) or (FFFFFFFF)										
19 Format type	(00000005)										
20 Creation time	(00000000)										
21 Number of mounts	Incremented mount count										
22 Number of read retries	Incremented read retry count										
23 Number of recoveries	Incremented recovery count										
24 Recovery failed flag	(00000000) or (FFFFFFFF)										
25-34 Reserved	(00000000)										

11.2.4 Block Management Table (BMT)

The data blocks of a Logical Volume are numbered consecutively, starting with 1. The number allocated to each data block is called the Absolute Block Number. The data blocks of a Logical Volume are contained either in one Logical Track Set or more than one Logical Track Set. The BMT contains the information required for locating and retrieving data blocks. The User Logical Track Set shall contain up to 2 048 user data blocks. All other Track Sets shall contain a single data block.

The information required for managing each data block is as follows:

- The Absolute Block Number of the data block in this Logical volume
- The starting address of the data block. The number of bytes from the beginning of the information field.
- The number of bytes of the data block in this Logical Track Set.
- A Link bit (L), set to ONE indicating that the data block extends to the next Track Set or set to ZERO when contained in this Track Set.
- A Start bit (S), set to ONE indicating that the data block begins in this Track Set or set to ZERO when carried over from the preceding Track Set.
- The total number of bytes of the data block.

The BMT shall contain information for only those data blocks in the Information field and be constructed from the end of the Information field towards the beginning with the 1st data block management information being placed in words 58 512 to 58 515. (see Figure 43)

11.2.4.1 BMT for VSIT, VIT, BST, LIDT, FIT, UT, TM, DM and EOD

Word 58 515 shall contain the total number of bytes in the data block.

Word 58 514 shall contain the number of bytes in the data block in this Track Set, recorded in bits 0 to 29. Bit 30 shall be a flag bit S and bit 31 shall be a flag bit L.

Word 58 513 shall contain the start address of the data block and shall be set to (00000000).

Word 58 512 shall contain the absolute block number of the data block.

11.2.4.2 BMT for the User data Track Set type

Word 58 515 shall contain the total number of data bytes in the 1st data block.

Word 58 514 shall contain the number of data bytes in the 1st data block which is included in this Track Set, recorded in bits 0 to 29. Bit 30 shall be a flag bit S and bit 31 shall be a flag bit L.

Word 58 513 shall contain the start address (number of bytes from beginning of User data field) of the 1st data block in User data field of this Track Set. In the case of this 1st data block, the content of this word shall be set to (00000000)..

Word 58 512 shall contain the absolute block number of the 1st data block in user data field of this Track Set.

Words 50 324 to 58 511 shall contain the management information for 2nd to 2047th data blocks, if present.

Words 50 320 to 50 323 shall contain the management information for the 2 048th data block, if present.

11.2.5 Data and information field definitions

The contents of the Information Field for Track Sets in the User Data Area are transmitted by the host. This applies to the User Data, File Mark, Set Mark, DM and EOD Track Set types.

The content of the Information Field is defined in VSIT, VIT, BST, LIDT, FIT and UT Track Set types as follows.

11.2.5.1 VSIT

The structure of Volume Set Information Table (VSIT) area on tape is as follows

1) The VSIT contains the logical volume set information for a physical volume.
2) The physical Track Set of the VSIT area shall be incremented starting at the TSID representing ZERO for a physical volume.
3) A VSIT area consists of 1 Track Set recorded 1000 times.
4) A VSIT contains information of one or more logical volumes.

© ISO/IEC 2001 – All rights reserved
Copyright International Organization for Standardization
Provided by IHS under license with ISO
No reproduction or networking permitted without license from IHS
Not for Resale

Words 35 to 79	shall be set to (00000000).
Word 80	shall contain the starting TSID of this tape**.**
Word 81	shall contain the physical TSID of last data block on this tape.
Words 82 to 97	shall contain the count of Logical Volumes on this tape.
Word 98	shall be set to (00000000).
Word 99	shall contain the starting physical TSID of the 1st Logical Volume.
Word 100	shall contain the last physical TSID of the 1st Logical Volume.
Word 101	shall contain the starting physical TSID of the 2nd Logical Volume if present, otherwise set to (00000000).
Word 102	shall contain the last physical TSID of the 2nd Logical Volume if present, otherwise set to (00000000).
Words 103 to 2 144	shall contain the starting and last physical TSIDs of the 3rd to 1 023rd Logical Volumes if present, otherwise set to (00000000).
Word 2 145	shall contain the starting physical TSID of the 1 024th Logical Volume if present, otherwise set to (00000000).
Word 2 146	shall contain the last physical TSID of the 1 024th Logical Volume if present, otherwise set to (00000000).
Word 2 147	shall contain the UID number of this tape issued at the time of initialization.
Word 2 148	shall contain the count of overwrites incurred by this tape.
Words 2 149 to 58 511	shall be set to (00000000).
Words 58 512 to 58 515	shall contain the BMT for this VSIT Track Set.

11.2.5.2 VIT

The Volume Information Table (VIT) is structured as follows

Words 35 to 38	shall be set to (00000000).
Words 39 to 78	shall contain the Volume Label.
Word 79	shall contain the starting physical TSID of the 1st data block in this Logical Volume.
Word 80	shall contain the last physical TSID of the EOD in the last data block in this Logical Volume.
Word 81	shall contain the last block number in the BMT for the track set containing the last data block.
Words 82 to 289	shall be set to (00000000).
Word 290	shall contain the UID number of this volume issued at the time of initialization.
Word 291	shall contain the count of overwrites of this Logical Volume.
Word 292	shall contain the LIDT indicator, see Word 17.
Word 293	shall contain the Block Search Operation indicator, see Word 18.
Word 294	shall be set to (00000005), identifying the Format Type DTF-2.
Word 295	shall be set to (00000002).
Word 296	The content of this word is a matter of agreement between interchange parties.
Words 297 to 8 226	shall be set to (00000000).
Words 8 227 to 8 250	shall contain Mount Information as follows

8 227: Mount count
8 228 - 8 230: reserved
8 231 - 8 250: information regarding the last five mounts
(date/Controller ROM version /Drive vendor UID Information).

© ISO/IEC 2001 – All rights reserved

Copyright International Organization for Standardization
Provided by IHS under license with ISO
No reproduction or networking permitted without license from IHS
Not for Resale

	The format of this information is a matter of agreement between interchange parties. The default value shall be (00000000).
Words 8 251 to 16 418	shall be set to (00000000).
Word 16 419	shall contain the total count of read retries in this Logical Volume.
Word 16 420	shall contain the number of recoveries by this Logical Volume.
Word 16 421	shall contain the Recovery failed flag, set to (FFFFFFFF) if true, otherwise set to (00000000).
Words 16 422 to 58 511	shall be set to (00000000).
Words 58 512 and 58 515	shall contain the BMT for this VIT Track Set.

11.2.5.3 BST

The Bad Spot Table (BST) shall contain the location information of "logically invalid" data. Logically invalid data occupies an area of tape, which has been identified as flawed and that source data has been rewritten and validated with the same Logical TSID at some following point. (See Figure 44. 'Data A' is logically invalid data.)

The write retry process creates a logically invalid data location on the tape. Logically invalid data is also called a "Bad spot". The beginning of a Bad spot is the 1st physical TSID and the end is the last physical TSID.

Two Words in the BST shall identify the UD Track Set type and location of a Bad spot

- The 1st physical TSID, shall bits 0 to 30 of the 1st location word
- Error type flag E, bit 31 shall be set to ONE for UD data error, otherwise set to ZERO
- The last physical TSID, shall occupy bits 0 to 31 of the 2nd location word.

	Byte 3	Byte 2	Byte 1	Byte 0
1st Word	bit 31 is E flag	1st physical TSID of the Bad Spot		
2nd Word	last physical TSID of the Bad Spot			

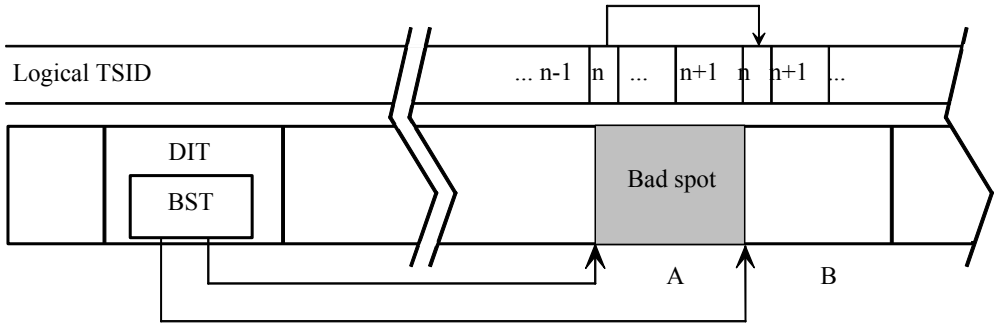

Figure 44 — Bad spot table usage

The BST shall be constructed as follows

Word 35	the msb of byte 3 shall be the E Error type flag, the 1st physical TSID of the 1st bad spot shall occupy the LSBs.
Word 36	The last physical TSID of the 1st bad spot shall occupy the LSBs.
Words 37 to 58 509	shall contain the information for the 2nd to 29 238th bad spots, as required, otherwise set to ZERO.
Words 58 510 and 58 511	shall contain the information of the last bad spot, 29 239th, in this BST, if required, otherwise set to ZERO.
Words 58 512 to 58 515	shall contain the BMT for this BST Track Set.

11.2.5.4 LIDT

The Logical ID Table (LIDT) data table may be used for fast block space and locate operations.

© ISO/IEC 2001 – All rights reserved
Copyright International Organization for Standardization
Provided by IHS under license with ISO
No reproduction or networking permitted without license from IHS
Not for Resale

The LIDT shall contain pointers occupying four Words, as defined by the following information:

– the Logical TSID count incremented from the LBOT, starting with 1, on all track set types except DM and EOD

– the physical TSID

– the number of files in this logical volume, starting with 1

– the block number in the BMT of the physical Track Set, which is the 1st block of this pointer.

This LIDT shall be constructed as follows, otherwise set to ZERO.

	Byte 3	Byte 2	Byte 1	Byte 0
1st Word	Logical TSID			
2nd Word	Physical TSID			
3rd Word	File number			
4th Word	block number in BMT for 1st block of 1st pointer			

Words 35 to 38 shall contain the information for the 1st pointer

Words 39 to 42 shall contain the information for the 2nd pointer.

Words 43 to 58 505 shall contain the information for the 3rd to 14 618th pointers.

Words 58 506 to 58 509 shall contain the information for the 14 619th pointer.

Word 58 510 and 58 511 shall be set to (00000000).

Words 58 512 to 58 515 shall contain the BMT for this LIDT Track Set.

11.2.5.5 FIT

The File Information Table (FIT) shall contain pairs of two types of data which locate a Tape Mark (TM). The nth data pair corresponds to the nth TM from the beginning of the volume.

– W((n-1)x2) the nth TM physical TSID

The Set Mark bit (S in W(2n-2) bit 31 of the nth TM physical TSID) shall be set to ONE, when the nth TM is a Set Mark and set to ZERO, when the nth TM is a File Mark.

– W((n-1)x2+1) Absolute block number of the nth TM.

The FIT shall be constructed as follows, otherwise set to ZERO

	Byte 3	Byte 2	Byte 1	Byte 0
1st Word	bit 31 is S flag	Physical TSID of nth TM		
2nd Word	block number in BMT of the nth TM			

Words 35 and 36 shall contain the physical TSID of the 1st TM.

Words 37 to 58 509 shall contain the information for the 2nd to 29 238th TMs.

Words 58 510 and 58 511 shall contain the information for the 29 239th TM.

Words 58 512to 58 515 shall contain the BMT for this FIT Track Set.

11.2.5.6 UT

The Update Table (UT) shall be used for indication of update status. This UT shall be checked by the receiving system to assure proper correspondence of directories to data file locations in this volume.

Word 35 shall be set to (FFFFFFFF) when updating this volume is in process and set to (00000000) for update complete and ready for system export and data interchange.

Words 36 to 58 511 shall be set to (00000000).

Words 58 512 to 58 515 shall contain the BMT for this UT Track Set.

--`,,```,,,,````-`-`,,`,,`,`,,`---

© ISO/IEC 2001 – All rights reserved

Copyright International Organization for Standardization
Provided by IHS under license with ISO
No reproduction or networking permitted without license from IHS Not for Resale

11.3 Track Set information

The Track Set information is placed sequentially into eight Product Code Arrays. All subsequent record processing of Track Set information uses the location information defined as follows. Each array shall contain 104 horizontal rows each of 192 bytes. The position of each byte in the array has an address of the form (W:X:Y).

Array locator W shall identify one of eight arrays with a value

0	for the first array
7	for the last array.

Column locator X shall identify the column in the array as one of 192 values

0	for the first and left-most column which contains identifier ID0
1	for the second column, which is reserved for identifier ID1, etc.
191	for the last and right-most column
4	columns are added at the left side to contain the sync pattern.
12	columns are added at the right side to contain the Inner ECC C1 Parity.

Row locator Y shall identify one row of 104 rows in the array

0	for the first and top-most row
1	for the second row, etc.
103	for the last and bottom-most row

Columns 2 to 191 contain Logical Track Set data in rows 0 to 76 and Outer ECC C2 Parity in rows 77 to 103.

The 104 rows are divided into 4 groups of 26 rows each. Each group is assigned to one of four tracks in a Track Set, see Figure 45. The identification number of the Sync Blocks and Sector numbers (defined in 11.5.4) are assigned in the following location information, see Figures 46, 48 and 49.

11.3.1 Loading the Product Code Arrays

Information data shall be loaded into the Product Code Arrays starting with Array 0, Row 0, Column 2 sequentially filling the rows of one array before proceeding to the next until all arrays are full.

Array 0, Row 0	(0:2:0) (0:3:0)	....	(0:191:0)
Array 0, Row 1	(0:2:1) (0:3:1)	....	(0:191:1)
		....	
Array 7, Row 103	(7:2:103) (7:3:103)	....	(7:191:103)

--`,,```,,,,````-`-`,,`,,`,`,,`---
© ISO/IEC 2001 – All rights reserved
Copyright International Organization for Standardization
Provided by IHS under license with ISO
No reproduction or networking permitted without license from IHS
Not for Resale

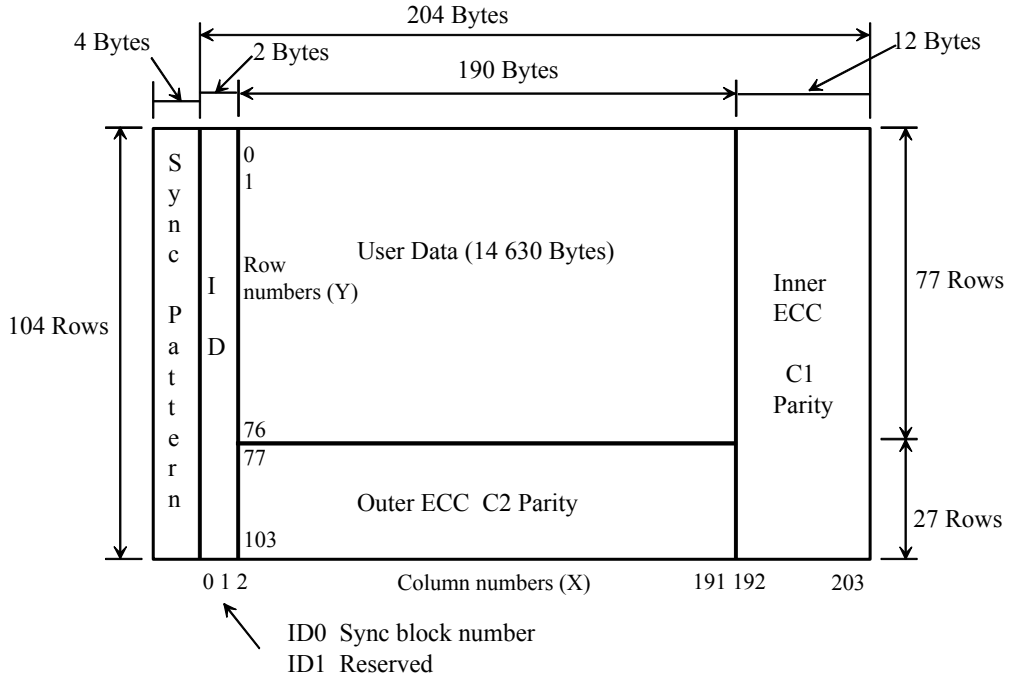

(a) Contents of a Product Code Array

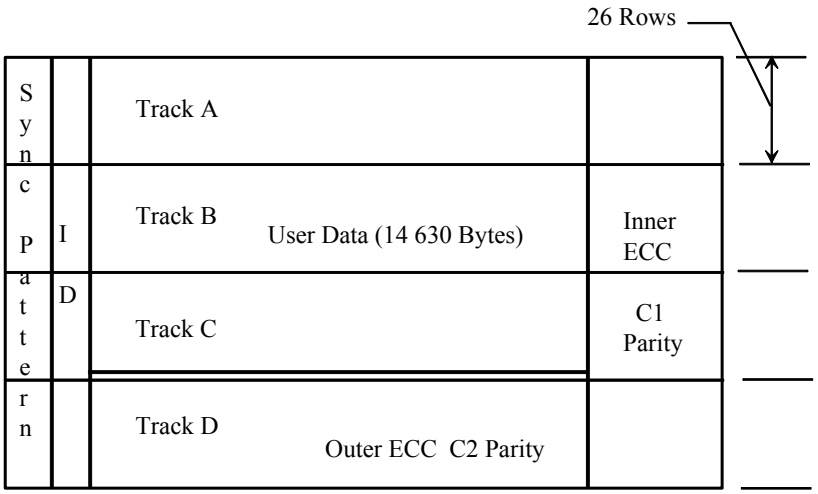

(b) Track assignment of a Product Code Array

Figure 45 — ECC Block Data (Processor)

© ISO/IEC 2001 – All rights reserved

Copyright International Organization for Standardization
Provided by IHS under license with ISO
No reproduction or networking permitted without license from IHS
Not for Resale

11.4 Product code array processing

Information is sequentially loaded into the user data area of 8 product code arrays. Sync blocks are formed comprising sync pattern, identification bytes, C2 Parity and C1 Parity. Sync block bytes are interleaved and randomized to form a channel sync block. One Segment comprise 8 product code arrays.

11.4.1 Error correction method

The C2 Parity shall consist of 27 bytes derived from the 77 bytes in rows 0 to 76 of a column in the Product Code Array.

Bytes in Column 2 (0:2:0) to (0:2:76) are processed with RS (104,77) to produce 27 bytes to be placed in the same column from (0:2:77) to (0:2:103).

The C1 Parity shall consist of 12 bytes derived from the 192 bytes of each row for the 104 rows of the ID and Source Information.

Bytes in Row 0 (0:0:0) to (0:191:0) are processed with RS (204,192) to produce 12 bytes to be placed in the same row from (0:192:0) to (0:203:0)

11.4.1.1 Error correction coding for C2 Parity

The Outer ECC is a Reed-Solomon code denoted RS(104,77)

The Galois Field shall be GF(2^8)

Field Generator Polynomial shall be $p(x) = x^8 + x^4 + x^3 + x^2 + x^0$

where x^n are place-keeping variables in GF(2^1), binary field

The Code Generator Polynomial shall be

$$G(x) = (x+1)(x+\mathrm{a})\left(x+\mathrm{a}^2\right)\left(x+\mathrm{a}^3\right)\left(x+\mathrm{a}^4\right)\left(x+\mathrm{a}^5\right)\left(x+\mathrm{a}^6\right)\left(x+\mathrm{a}^7\right)$$
$$\left(x+\mathrm{a}^8\right)\left(x+\mathrm{a}^9\right)\left(x+\mathrm{a}^{10}\right)\left(x+\mathrm{a}^{11}\right)\cdots\left(x+\mathrm{a}^{25}\right)\left(x+\mathrm{a}^{26}\right)$$

where a is given by (02) in GF(2^8)

Outer error code parity

$$\mathrm{K}_{26}, \mathrm{K}_{25}, \cdots \mathrm{K}_{10}, \mathrm{K}_9, \mathrm{K}_8, \mathrm{K}_7, \mathrm{K}_6, \mathrm{K}_5, \mathrm{K}_4, \mathrm{K}_3, \mathrm{K}_2, \mathrm{K}_1, \mathrm{K}_0,$$

in $\mathrm{K}_{26}x^{26} + \mathrm{K}_{25}x^{25} + \cdots + \mathrm{K}_1 x^1 + \mathrm{K}_0 x^0$

are obtained as the remainder after dividing

$x^{27}\mathrm{D}(x)$ by $\mathrm{G}(x)$

where $\mathrm{D}(x) = \mathrm{B}_{76}x^{76} + \mathrm{B}_{75}x^{75} + \cdots + \mathrm{B}_1 x + \mathrm{B}_0$

The polynomial of the full code is

$$\mathrm{B}_{76}x^{103} + \mathrm{B}_{75}x^{102} + \cdots + \mathrm{B}_1 x^{28} + \mathrm{B}_0 x^{27} + \mathrm{K}_{26}x^{26} + \mathrm{K}_{25}x^{25} + \cdots + \mathrm{K}_1 x + \mathrm{K}_0$$

where

B_{76} to B_0 represent the 77 bytes of user data in rows 0 to 76 of the Product Code Arrays and K_{26} to K_0 represent the 27 bytes of outer error code.

The 27 bytes K_{26} to K_0 shall be placed in rows 77 to 103 of the Product Code Arrays.

11.4.2 Error correction coding for C1 Parity

The Inner ECC is a Reed-Solomon code denoted RS(204,192)

The Galois Field shall be GF(2^8)

Field Generator Polynomial shall be $p(x) = x^8 + x^4 + x^3 + x^2\ x^0$

where x^n are place-keeping variables in GF(2^1), binary field

The left-most term is "oldest" in time computationally and the first written on tape;

© ISO/IEC 2001 – All rights reserved
Copyright International Organization for Standardization
Provided by IHS under license with ISO
No reproduction or networking permitted without license from IHS
Not for Resale

The Code Generator Polynomial shall be

$$G(x) = (x+1)(x+a)(x+a^2)(x+a^3)(x+a^4)(x+a^5)(x+a^6)(x+a^7)$$
$$(x+a^8)(x+a^9)(x+a^{10})(x+a^{11})$$

where error code parity

$$K_{11}, K_{10}, K_9, K_8, K_7, K_6, K_5, K_4, K_3, K_2, K_1, K_0$$

in $K_{11}x^{11} + K_{10}x^{10} + \ldots + K_1x + K_0$

are obtained as the remainder after dividing

$$x^{12}D(x) \text{ by } G(x)$$

where $D(x) = I_0x^{191} + I_1x^{190} + B_{189}x^{189} + \ldots + B_1x + B_0$

The polynomial of the full code is

$$I_0x^{203} + I_1x^{202} + B_{189}x^{201} + \ldots B_0x^{12} + K_{11}x^{11} + K_{10}x^{11} + K_{10}x^{10} + \ldots + K_1x + K_0$$

where

I_0 and I_1 represent the 2 bytes of sync full code block identification
B_{189} to B_0 represent the 190 bytes of sync block source information
and K_{11} to K_0 represent the 12 bytes of inner error code parity

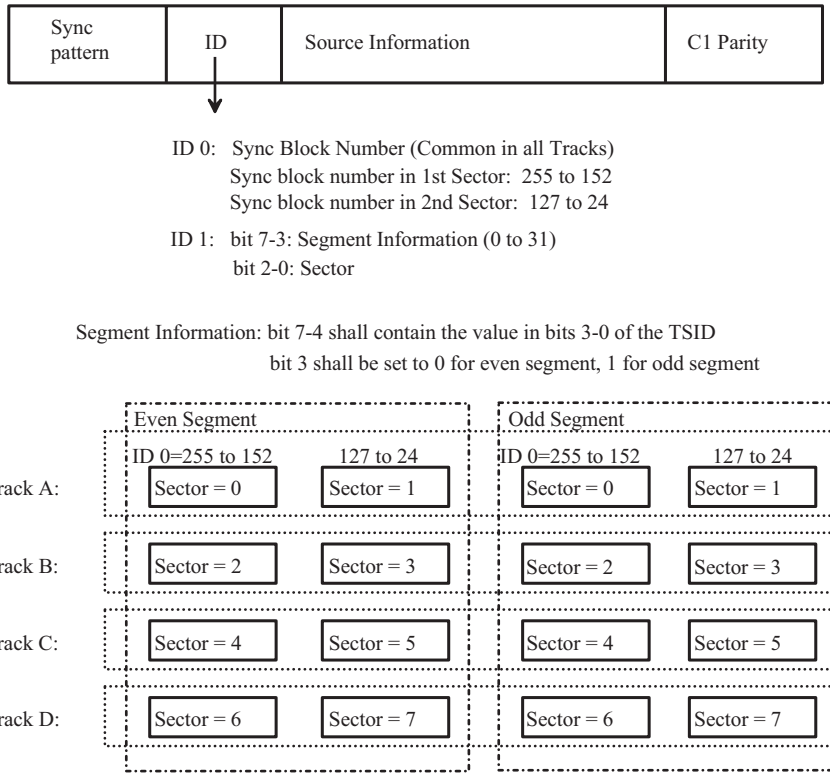

Figure 46 — Segment/Sector details

11.5 Track assignments

A Logical Track Set shall occupy 4 tracks on the tape identified as Track A, Track B, Track C and Track D. Each track shall comprise 4 Sectors.

11.5.1 Segments/Sectors (Figure 46)

There are 2 Segments (16 Sectors) in a Track Set, numbered as follows:

Segment: even/odd
Sector : 0 to 7

Each Segment shall comprise 8 Sectors. One Sector shall comprise the following elements a Preamble and 104 Sync Blocks

© ISO/IEC 2001 – All rights reserved

Copyright International Organization for Standardization
Provided by IHS under license with ISO
No reproduction or networking permitted without license from IHS
Not for Resale

Sector number 0 and 1 of even segment and odd segment shall be assigned to Track A
Sector number 2 and 3 of even segment and odd segment shall be assigned to Track B
Sector number 4 and 5 of even segment and odd segment shall be assigned to Track C
Sector number 6 and 7 of even segment and odd segment shall be assigned to Track D.

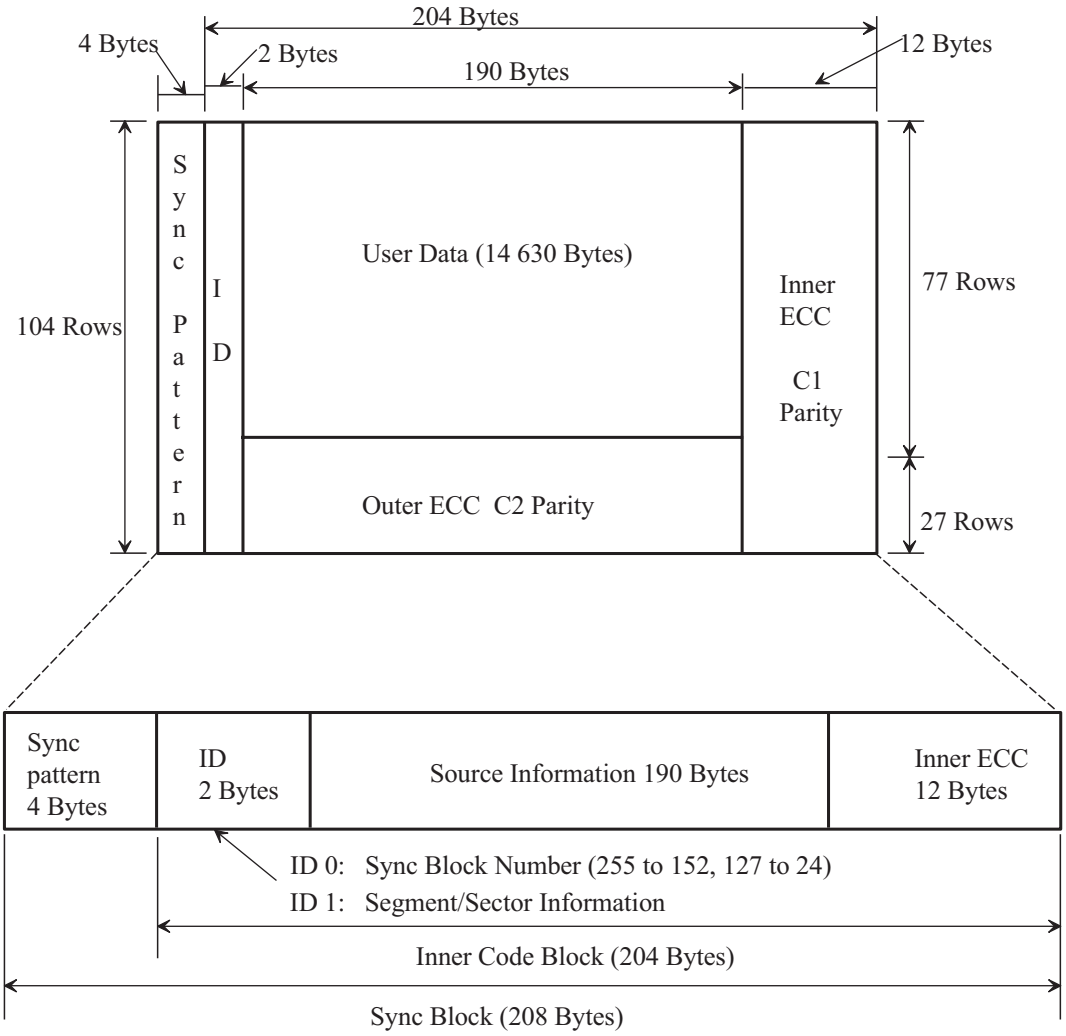

Figure 47 — Sync Block

11.5.2 Sync Blocks (Figure 47)

Each Sync Block shall comprise 208 Bytes arranged in the following elements

Sync Pattern of 4 Bytes and the Inner Code Block.

The Inner Code Block shall comprise 204 Bytes arranged in the following elements

Sync Block ID of 2 Bytes
Source Information field of 190 Bytes and
Inner ECC of 12 Bytes.

The Sync Block ID and Source Information are identified in the 8 product code arrays. The Sync Pattern is not identified in the product code arrays and is not included in the error protection process.

11.5.3 Track interleave (Figure 48)

The interleave of data shall be accomplished across the 4 helical tracks of a Track Set. The Sync Blocks (832 blocks) of the 4 helical tracks are identified in the eight Product Code Arrays ((0 to 7), 1 Segment).

Each Product Code Array shall be divided into four areas (see Figure 45(b)), equal to the content of four helical tracks. The arrangement of Sync Blocks in the two sectors of each track are sequentially assigned from each of the eight Product Code Arrays (0 to 7). A recorded track shall begin with the following product code array assignment.

© ISO/IEC 2001 – All rights reserved
Copyright International Organization for Standardization
Provided by IHS under license with ISO
No reproduction or networking permitted without license from IHS
Not for Resale

Track A	Product Code Array 0
Track B	Product Code Array 6
Track C	Product Code Array 4
Track D	Product Code Array 2

Note - This track interleave operation together with C2 ECC provides the possibility of correcting the data in error of one entire track.

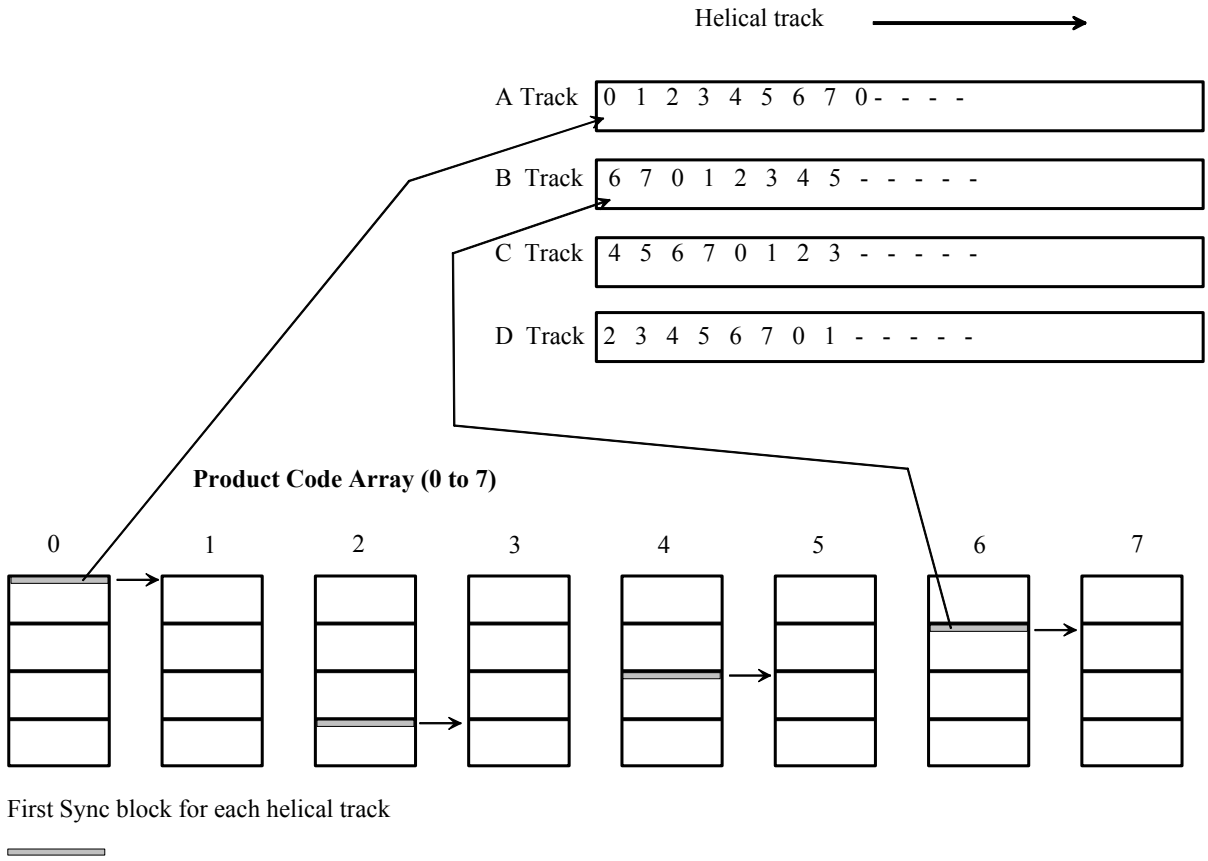

Figure 48 — Track interleave

© ISO/IEC 2001 – All rights reserved

Copyright International Organization for Standardization
Provided by IHS under license with ISO
No reproduction or networking permitted without license from IHS
Not for Resale

Track Sync Blocks

Track A- Sync Blocks

Sector No.	Sync Block No.	Byte address (W:X:Y)
0	255	(0:0:0) (0:1:0) (0:2:0) ..... (0:190:0) (0:191:0)
0	254	(1:0:0) (1:1:0) (1:2:0) ..... (1:190:0) (1:191:0)
0	253	(2:0:0) (2:1:0) (2:2:0) ..... (2:190:0) (2:191:0)
		.....
0	248	(7:0:0) (7:1:0) (7:2:0) ..... (7:190:0) (7:191:0)
0	247	(0:0:1) (0:1:1) (0:2:1) ..... (0:190:1) (0:191:1)
0	246	(1:0:1) (1:1:1) (1:2:1) ..... (1:190:1) (1:191:1)
		.....
0	152	(7:0:12)(7:1:12)(7:2:12) ..... (7:190:12)(7:191:12)
1	127	(0:0:13)(0:1:13)(0:2:13) ..... (0:190:13)(0:191:13)
		.....
1	24	(7:0:25)(7:1:25)(7:2:25) ..... (7:190:25)(7:191:25)

Track B- Sync Blocks

Sector No.	Sync Block No.	Byte marker (W:X:Y)
2	255	(6:0:26)(6:1:26)(6:2:26) ..... (6:190:26)(6:191:26)
2	254	(7:0:26)(7:1:26)(7:2:26) ..... (7:190:26)(7:191:26)
2	253	(0:0:26)(0:1:26)(0:2:26) ..... (0:190:26)(0:191:26)
		.....
2	248	(5:0:26)(5:1:26)(5:2:26) ..... (5:190:26)(5:191:26)
2	247	(6:0:27)(6:1:27)(6:2:27) ..... (6:190:27)(6:191:27)
2	246	(7:0:27)(7:1:27)(7:2:27) ..... (7:190:27)(7:191:27)
		.....
2	152	(5:0:38)(5:1:38)(5:2:38) ..... (5:190:38)(5:191:38)
3	127	(6:0:37)(6:1:39)(6:2:39) ..... (6:190:39)(6:191:39)
		.....
3	24	(5:0:51)(5:1:51)(5:2:51) ..... (5:190:25)(5:191:51)

Track C- Sync Blocks

Sector No.	Sync Block No.	Byte marker (W:X:Y)
4	255	(4:0:52)(4:1:52)(4:2:52) ..... (4:190:52)(4:191:52)
4	254	(5:0:52)(5:1:52)(5:2:52) ..... (5:190:52)(5:191:52)
4	253	(6:0:52)(6:1:52)(6:2:52) ..... (6:190:52)(6:191:52)
		.....
4	248	(3:0:52)(3:1:52)(3:2:52) ..... (3:190:52)(3:191:52)
4	247	(4:0:53)(4:1:53)(4:2:53) ..... (4:190:53)(4:191:53)
4	246	(5:0:53)(5:1:53)(5:2:53) ..... (5:190:53)(5:191:53)
		.....
4	152	(3:0:64)(3:1:64)(3:2:64) ..... (3:190:64)(3:191:64)
5	127	(4:0:13)(4:1:65)(4:2:65) ..... (4:190:65)(4:191:65)
		.....
5	24	(3:0:77)(3:1:77)(3:2:77) ..... (3:190:77)(3:191:77)

Track D- Sync Blocks

Sector No.	Sync Block No.	Byte marker (W:X:Y)
6	255	(2:0:78)(2:1:78)(2:2:78) ..... (2:190:78)(2:191:78)
6	254	(3:0:78)(3:1:78)(3:2:78) ..... (3:190:78)(3:191:78)
6	253	(4:0:78)(4:1:78)(4:2:78) ..... (4:190:78)(4:191:78)
		.....
6	248	(1:0:78)(1:1:78)(1:2:78) ..... (1:190:78)(1:191:78)
6	247	(2:0:79)(2:1:79)(2:2:79) ..... (2:190:79)(2:191:79)
6	246	(3:0:79)(3:1:79)(3:2:79) ..... (3:190:79)(3:191:79)
		.....
6	152	(1:0:90)(1:1:90)(1:2:90) ..... (1:190:90)(1:191:90)
7	127	(2:0:91)(2:1:91)(2:2:91) ..... (2:190:91)(2:191:91)
		.....
7	24	(1:0:103)(1:1:103)(1:2:103) .... (1:190:103)(1:191:103)

© ISO/IEC 2001 – All rights reserved
Copyright International Organization for Standardization
Provided by IHS under license with ISO
No reproduction or networking permitted without license from IHS
Not for Resale

11.5.4 Byte interleave across Sync Blocks (Figure 49)

Byte interleave shall be accomplished on the data of the Inner Code Block as follows

The Track A,	Sync Block 255	(0:0:0) (0:1:0) (0:2:0) .....
	Sync Block 254	(1:0:0) (1:1:0) (1:2:0) .....
	Sync Block 253	(2:0:0) (2:1:0) (2:2:0) .....
	Sync Block 252	(3:0:0) (3:1:0) (3:2:0) ..... , etc.

are byte interleaved into

The Track A,	Sync Block 255'	(0:0:0) (1:1:0) (2:2:0) .....
	Sync Block 254'	(1:0:0) (2:1:0) (3:2:0) .....
	Sync Block 253'	(2:0:0) (3:1:0) (0:2:0) .....
	Sync Block 252'	(3:0:0) (0:1:0) (1:2:0) ..... , etc.

4 sync blocks of 1 product code array are interleaved by 1 byte unit except in the Sync pattern.

Note - Byte interleave together with C1 ECC provides the possibility of correcting a burst error of up to 24 bytes per four sync blocks.

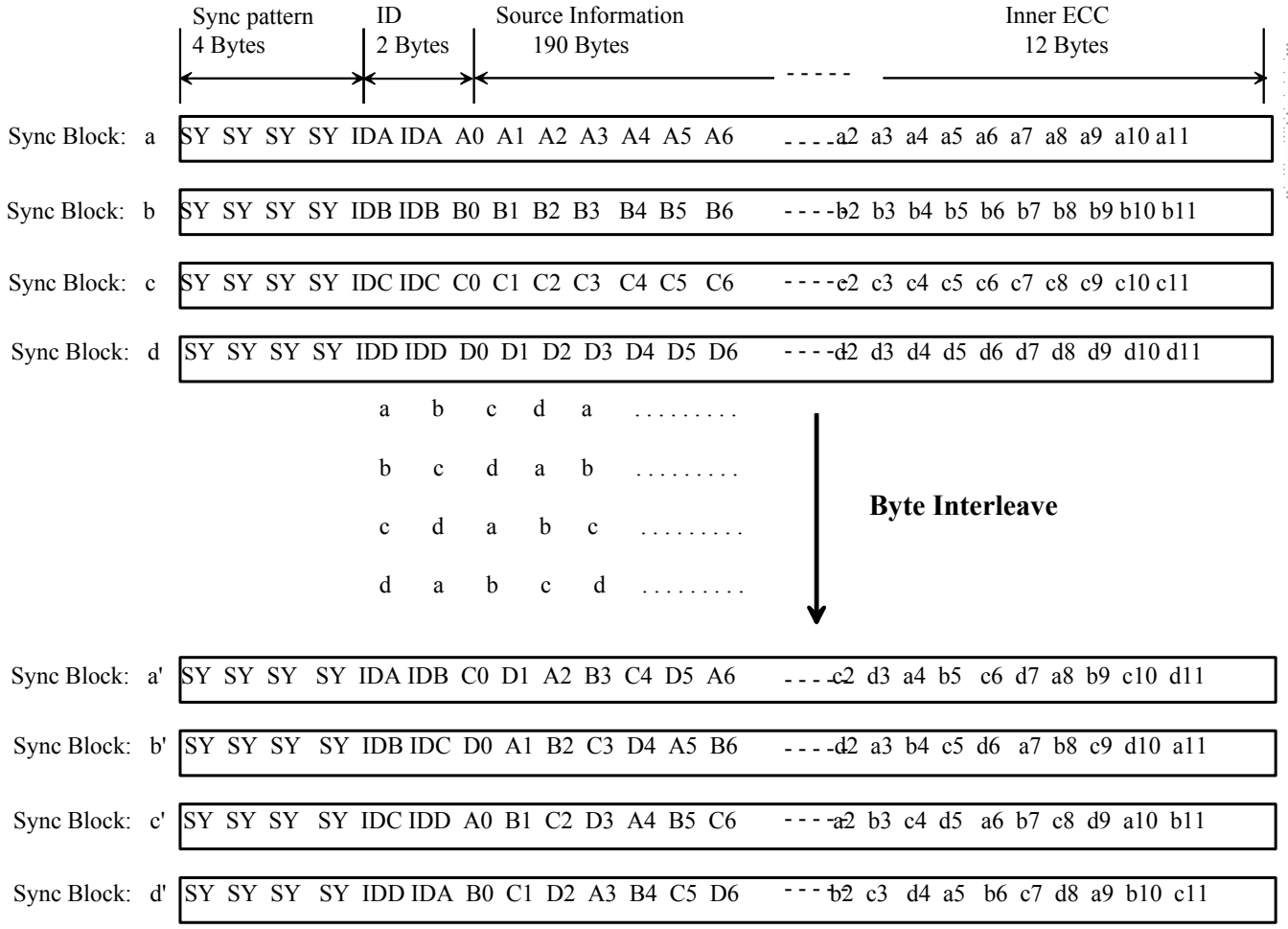

Figure 49 — Byte interleave across Sync Blocks

11.5.5 Randomization

The Inner Code Block (ID, Source information, inner code) of each sector shall be randomized to average the 1/0 distribution. The Preamble and Sync Pattern are not randomized.

© ISO/IEC 2001 – All rights reserved

Copyright International Organization for Standardization
Provided by IHS under license with ISO
No reproduction or networking permitted without license from IHS
Not for Resale

Randomization shall be accomplished by XORing the serial byte stream to be recorded with the serial byte stream to be generated by the following polynomial equation.

$G(x)=x^8+x^4+x^3+x^2+x^0$ (in GF(2))

The left-most term shall enter the division computation first. The polynomial shall be preset to (80) at the end of every Sync Pattern.

Note - With the data stream set to all ZEROs the computation will generate a byte sequence beginning with (80), (38), (D2), (81), (49) and so on.

11.6 Formation of the contents of a helical track (Figure 50)

Channel sync blocks are interleaved across the 4 assigned areas of the 8 arrays to form data streams for Tracks A,B,C and D. These data streams are then 8/9 encoded to form the Channel bits. The contents of a track comprises 4 sectors formed from the Channel sync blocks, with each preceded by a preamble. A Track Pilot Signal (TPS) is added between the sectors of Tracks B and D. The Channel bits are then subjected to a precode filter process prior to being applied to the write heads.

11.6.1 Segment/Sector details (Figure 47)

The Sector shall contain a Preamble and 104 Sync Blocks, resulting in 195 768 Channel bits. The 16 Sectors of a Track Set shall be numbered as follows

Track A -

0 for the 1st sector, 1 for the 2nd sector and shall be components of the even segment
0 for the 3rd sector, 1 for the 4th sector and shall be components of the odd segment

Track B -

2 for the 1st sector, 3 for the 2nd sector and shall be components of the even segment
2 for the 3rd sector, 3 for the 4th sector and shall be components of the odd segment

Track C -

4 for the 1st sector, 5 for the 2nd sector and shall be components of the even segment
4 for the 3rd sector, 5 for the 4th sector and shall be components of the odd segment

Track D -

6 for the 1st sector, 7 for the 2nd sector and shall be components of the even segment
6 for the 3rd sector, 7 for the 4th sector and shall be components of the odd segment

11.6.1.1 Preamble

The Preamble shall comprise 120 times 9 Channel bits set to ONE.

11.6.1.2 Sync Blocks

Sync Blocks shall comprise a Sync Pattern of 4 times 9 Channel bits and a Data Field of 204 times 9 Channel bits.

The Sync Pattern symbols are not found in the 8/9 coding table of annex B. These symbols shall provide a magnetization pattern which is distinctly different than all other data. The order of recording the Sync Pattern shall be

lsb 100010101 000000001 011100100 000001011 msb

The Data Field shall comprise 2 bytes of Sync Block ID followed by 190 bytes of source information derived according to "Source information of Sync Block"(Figure 46), both protected by 12 bytes of inner error code, all of which are processed as defined in 11.7.

The Sync Block ID byte 0 shall indicate the Sync Block and Sector position within the track set. Refer to Figures 49 and 50.

The Sync Block ID byte 1 shall indicate Track Set ID, Segment and Sector information as follows:

bits 7 to 4 shall contain the value in bits 3 to 0 of the TSID

bit 3 shall be set to Zero for an even segment and One for an odd segment

bits 2 to 0 shall contain the sector number starting with 0

The 104 Sync Blocks of the 1st sector shall be numbered sequentially starting with 255 and ending with 152 in all four tracks of a track set.

The 104 Sync Blocks of the 2nd sector shall be numbered sequentially starting with 127 and ending with 24 in all four tracks of a track set.

© ISO/IEC 2001 – All rights reserved
Copyright International Organization for Standardization
Provided by IHS under license with ISO
No reproduction or networking permitted without license from IHS
Not for Resale

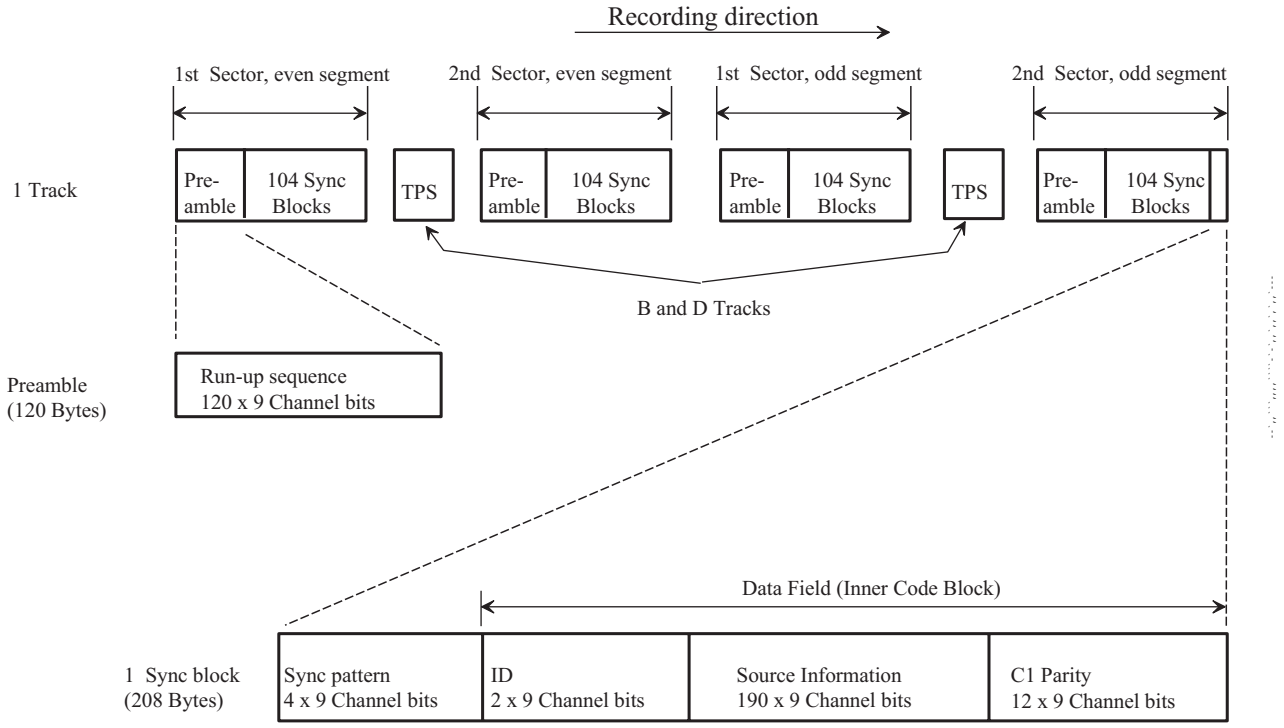

Figure 50 — Contents of a helical track

11.6.2 Channel bit coding (annex B)

The 8/9 coding shall be as shown in annex B.

The Channel bit stream is recorded at a maximum physical recording density of 6 349 ftpmm.

11.6.3 Interleaved-NRZ1 (Figure 51)

8/9 coded data shall be processed with a precode circuit to generate Interleaved-NRZ1.

The 9-bit Channel bit stream shall be subjected to the following precode filtering.

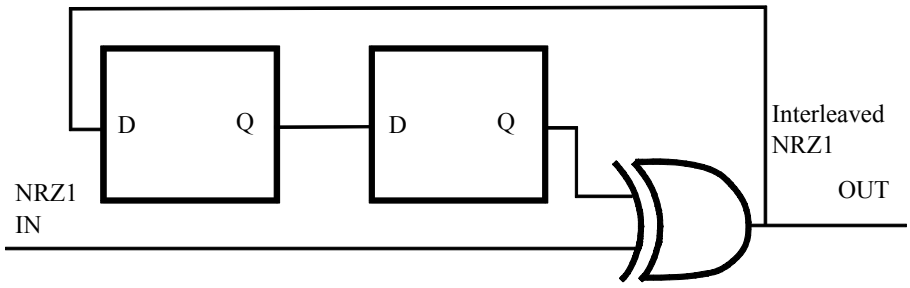

Figure 51 — Precode circuit

Data out of the precode circuit shall be recorded to the tape.

11.6.4 Tracking Pilot Signals (TPS)

The first TPS shall be a nominal 666 kHz signal (99,2 ftpmm) recorded twice on tracks B and F. The second TPS shall a nominal 444 kHz signal (66,2 ftpmm) recorded twice on tracks D and H.

12 Track geometry

12.1 General

Two types of track shall be recorded on the tape, helically recorded tracks and longitudinally recorded tracks. Helically recorded tracks contain user data. The longitudinally recorded Control Track provides accurate positioning information to the drive servo. The longitudinally recorded Time Code Track provides unique identification of the longitudinal position on tape, and thus enables fast searches to be carried out. The configuration of the tracks is shown in Figure 52.

© ISO/IEC 2001 – All rights reserved

Copyright International Organization for Standardization
Provided by IHS under license with ISO
No reproduction or networking permitted without license from IHS
Not for Resale

12.2 Helically recorded tracks

Each track shall comprise four sectors with a tracking pilot signal included on tracks B, D, F and H.

12.2.1 Location of the tracks

The distance from the lower edge of the helical tracks to the Tape Reference Edge shall be

l_{349} = 1,241 mm ± 0,010 mm

The distance from the upper edge of the helical tracks to the Tape Reference Edge shall be

l_{350} = 11,491 mm ± 0,010 mm

The effective width of the helically recorded area shall be the distance between two lines parallel to the Tape Reference Edge, one passing through the centreline of, and at the end of, the helical track, and the other passing through the centreline at the beginning of the Preamble at the start of the helically recorded area, and shall be

l_{351} = 10,213 mm nominal

The distance from the lower edge of the helically recorded area to the Tape Reference Edge shall be

l_{352} = 1,250 mm ± 0,010 mm

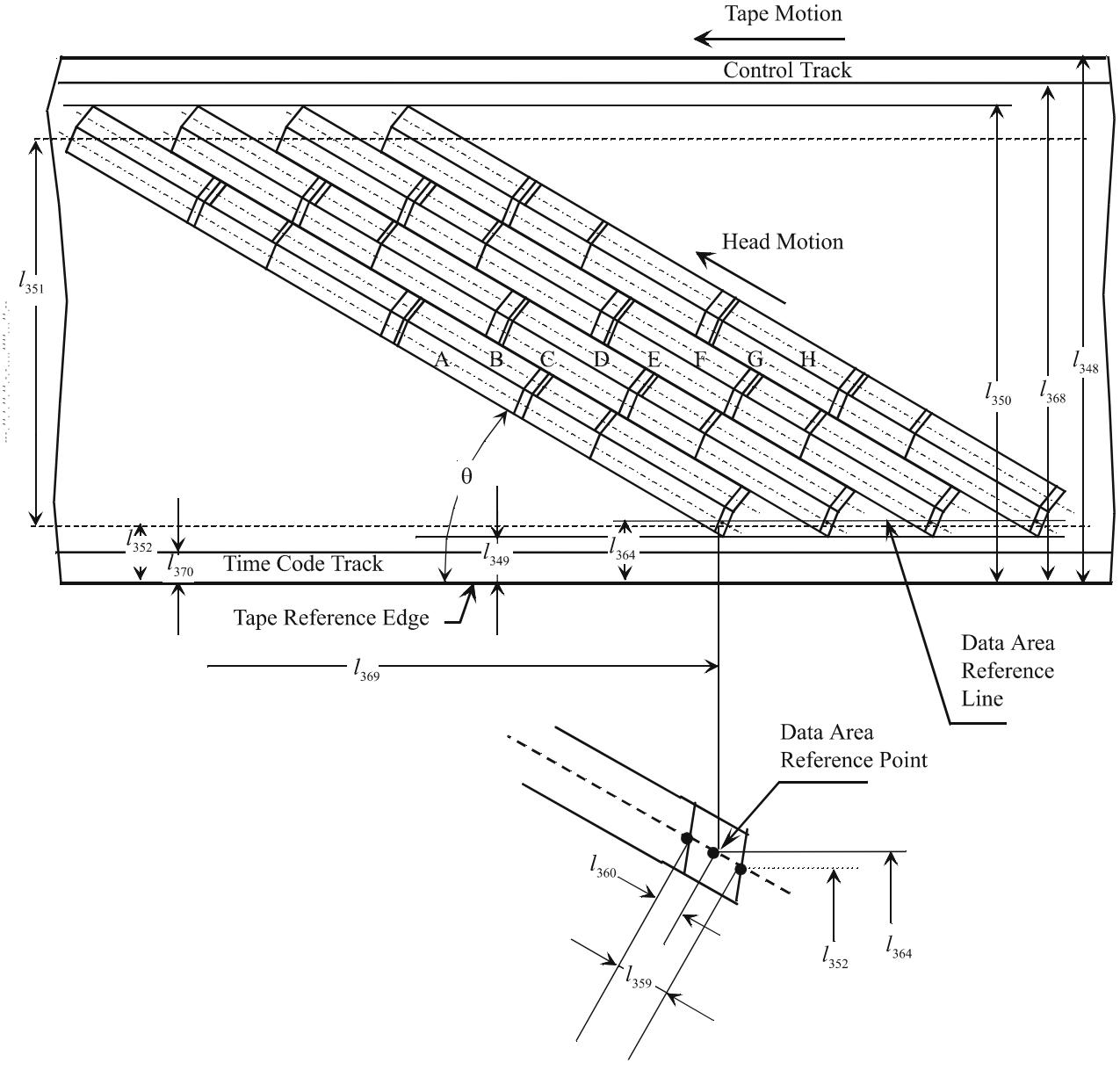

Figure 52 — Location and dimensions of recorded tracks

© ISO/IEC 2001 – All rights reserved
Copyright International Organization for Standardization
Provided by IHS under license with ISO
No reproduction or networking permitted without license from IHS
Not for Resale

12.2.2 Track width

The width of each helical track shall be

$$l_{353} = 0{,}019 \text{ mm } {}^{+0{,}002\text{mm}}_{-0{,}003\text{mm}}$$

12.2.3 Track angle

The angle of each track relative to the Tape Reference Edge shall be

$$\theta = 4{,}610°$$

12.2.4 Track pitch

The distance between the centrelines of adjacent tracks A and B (C and D), measured perpendicular to the track centreline shall be

$$l_{354} = 0{,}019 \text{ mm} \pm 0{,}002 \text{ mm}$$

The distance between the centreline of track A in Track Set n to the centreline of track A in Track Set n+1 shall be

$$l_{355} = 0{,}152 \text{ mm nominal}$$

The distance between the centrelines of track A and track C in Track Set n shall be

$$l_{356} = 0{,}038 \text{ mm nominal}$$

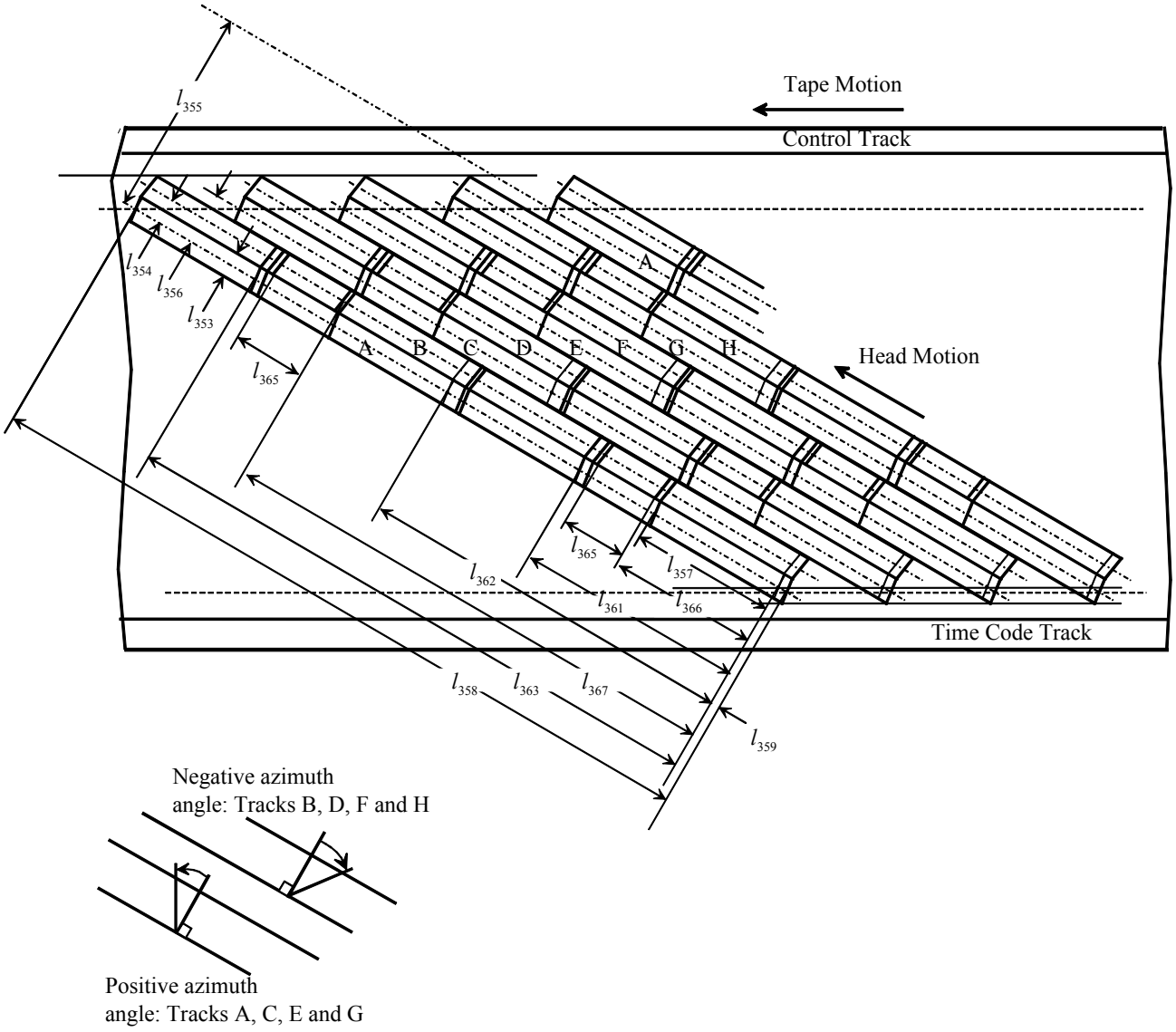

Figure 53 — Location and dimensions of helical track elements

© ISO/IEC 2001 – All rights reserved

Copyright International Organization for Standardization
Provided by IHS under license with ISO
No reproduction or networking permitted without license from IHS
Not for Resale

12.2.5 Location of elements in the helical track

The length of each sector shall be

l_{357} = 30,644 mm nominal

The total length of helical track shall be

l_{358} = 127,166 mm nominal

The distance from the Preamble pattern to the start of the Sector at the start of a helical track shall be

l_{359} = 0,170 mm ± 0,045 mm

The distance from the start of the first Sector of a helical track to the Data Area Reference Point shall be

l_{360} = 0,000 mm ± 0,045 mm

The distance from the start of the first Sector to the start of the second Sector of a helical track shall be

l_{361} = 32,412 mm ± 0,045 mm

The distance from the start of the first Sector to the start of the third Sector of a helical track shall be

l_{362} = 63,940 mm ± 0,045 mm

The distance from the start of the first Sector to the start of the fourth Sector of a helical track shall be

l_{363} = 96,352 mm ± 0,045 mm

12.2.6 Location of the Data Area Reference Point

The Data Area Reference Line shall be a line parallel to the Tape Reference Edge and spaced

l_{364} = 1,264 mm (nominal) from it.

The Data Area Reference point for track A of a Track Set is at the intersection of the Data Area Reference Line and the centreline of the track.

12.2.7 Straightness of tracks

The centreline of a recorded track shall be contained within two parallel straight lines 6 μm apart.

12.2.8 Azimuth angles

The recorded bit positive azimuth angle for tracks A and C shall be +15,484° ± 0,167°

The recorded bit negative azimuth angle for tracks B and D shall be -15,316° ± 0,167°

These values of the azimuth angles result from the bits having been recorded with the tape in motion longitudinally with helical recording heads.

12.2.9 Tracking Pilot Signals (TPS)

The length of the TPS in tracks B, D, F and H shall be

l_{365} = 0,864 mm

The distance from the start of first Sector to the start of the first TPS in tracks B, D, F and H shall be

l_{366} = 30,769 mm ± 0,045 mm

The distance from the start of first Sector to the start of the second TPS in tracks B, D, F and H shall be

l_{367} = 94,709 mm ± 0,045 mm

12.2.10 Amplitude of servo signals

The Tracking Pilot Signal amplitude averaged over any TPS shall be between 80 % and 120 % of SRA3.

12.3 Longitudinal tracks geometry

12.3.1 Control Track

The distance from the lower edge of the Control Track to the Tape Reference Edge shall be

l_{368} = 12,05 mm ± 0,08 mm

--`,,```,,,,````-`-`,,`,,`,`,,`---

© ISO/IEC 2001 – All rights reserved
Copyright International Organization for Standardization
Provided by IHS under license with ISO
No reproduction or networking permitted without license from IHS
Not for Resale

The distance between the Control Track flux transition as defined in 14.2 and the Data Area Reference Point of the first helical track of the Track Set to which it belongs shall be

l_{369} = 175,79 mm ± 0,10 mm

12.3.2 Time Code Track signals recording position

The distance from the upper edge of the Time Code Track to the Tape Reference Edge shall be

l_{370} = 0,60 mm ± 0,09 mm

The distance between the leading edge of bit 0 of the Time Code and the Data Area Reference Point of the first helical track of the Track Set to which it refers shall be l_{369}.

13 Method of recording helical tracks

The method of recording shall be

– a ONE is represented by a flux transition at the centre of a bit cell.

– a ZERO is represented by the absence of flux transitions in the bit cell.

Note - The first flux transition on the helical tracks may be of either polarity.

13.1 Physical recording density

The maximum physical recording density shall be 6 349 ftpmm. The resulting nominal bit cell length is 0,158 μm.

13.2 Record current optimization

The record current shall be optimized such that the read signal amplitude averaged over a minimum of 2 560 flux transitions at 3 201 ftpmm, exclusive of missing pulses, shall be between 84 % and 120 % of SRA1.

13.3 Efficiency of erasure

In all erased areas the full width of the tape shall be a.c. erased in the direction of tape motion. After erasure, the read signal amplitude shall be no greater than 2% of the average signal amplitude recorded at the physical recording density of 800,3 ftpmm (SRA3) on the same tape.

14 Method of recording longitudinal tracks

14.1 Overview

The Control Track provides accurate positioning information to the drive servo. The Time Code Track provides unique identification of the longitudinal position on tape and thus enables fast search capability.

14.2 Control Track

14.2.1 Signal

The Control Track shall be recorded with a series of constant flux levels alternating in polarity at each Track Set, and completing one cycle in two Track Sets. The flux transitions provide the control timing reference points. The transitions shall be aligned with the helical track Data Area Reference Point as shown in Figures 52 and 53.

14.2.2 Polarity of magnetisation (Figure 54)

The polarity of the flux during time interval E shall be such that the south poles of the magnetic domain should point in the direction of normal tape travel and, similarly, during time interval F the north pole shall be thus oriented.

14.2.3 Alignment

Transitions from south poles (interval E) to north poles (interval F) of the magnetic domains shall be such that they occur at the even Track Set Data Area Reference Points of the A-Track. Similarly, transitions from north to south poles occur at odd Track Set Data Area Reference Points of the A-Track.

© ISO/IEC 2001 – All rights reserved

Copyright International Organization for Standardization
Provided by IHS under license with ISO
No reproduction or networking permitted without license from IHS
Not for Resale

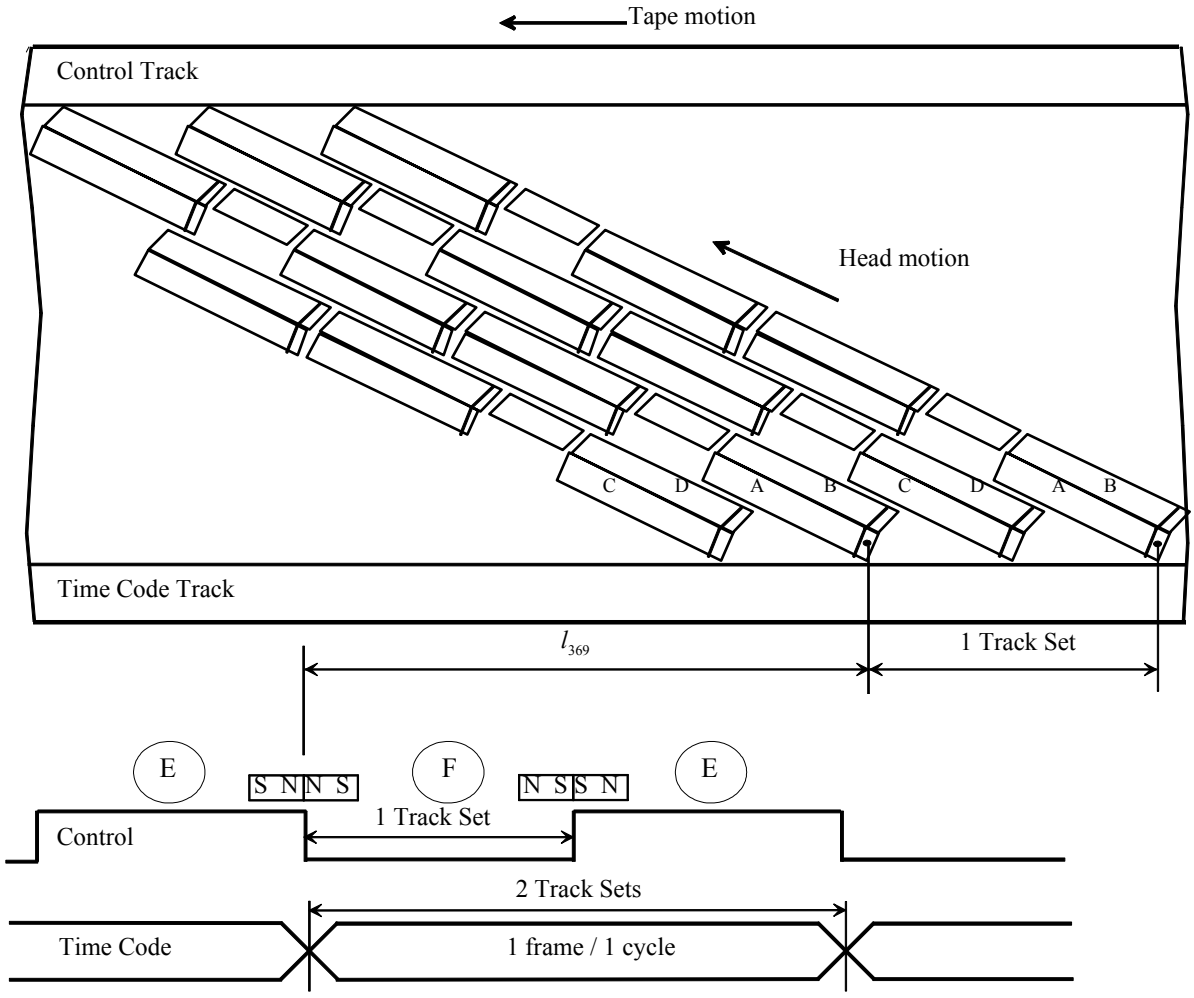

Figure 54 — Longitudinal Tracks

14.2.4 Read signal amplitude

The average read signal amplitude, taken over 200 flux transitions, exclusive of missing pulses, shall be between 80 % and 130 % of SRA2. A missing pulse is defined as one read as 50 % or less of SRA2.

14.2.5 Quality of the Control Track

A missing pulse zone begins with a missing pulse and ends when 4 consecutive flux transitions, which are not missing pulses, have been detected. The length of a missing pulse zone shall not exceed 30 mm.

14.3 Time Code Track

14.3.1 Method of recording the Time Code Track

The method of recording on the tape shall be

– a ZERO is represented by a flux transition at the beginning of a bit cell

– a ONE is represented by a flux transition at the beginning of a bit cell followed by a transition at the centre of the bit cell.

14.3.2 Physical recording density

The nominal maximum physical recording density shall be 84,53 ftpmm. The resulting bit cell length is 11,83 μm.

14.3.3 Bit shift

The maximum displacement of any ONEs zero crossing, exclusive of missing pulses, from its expected position as defined by the nominal bit cell length, shall not exceed 25 %.

14.3.4 Read signal amplitude

The average read signal amplitude, taken over 800 flux transitions, exclusive of missing pulses, shall be between 80 % and 130 % of SRA2.

-`,,```,,,,````-`-`,,`,,`,`,,`---
© ISO/IEC 2001 – All rights reserved
Copyright International Organization for Standardization
Provided by IHS under license with ISO
No reproduction or networking permitted without license from IHS
Not for Resale

14.3.5 Quality of the Time Code Track

In any group of 8 Time Codes, at least 6 shall not have been corrupted by missing pulses or bit shift.

14.4 Format for the Time Code Track

The Time Code Track shall contain a unique Time Code for each Track Set pair. Each Time Code shall comprise 80 bits.

14.4.1 Count bits

The count of Track Set pairs shall be contained in eight groups of count bits.

Bits 0 to 3	shall express, in binary notation, a count of units of Track Set pairs, in the range 0 to 9
Bits 8 and 9	shall express, in binary notation, a count of tens of Track Set pairs, in the range 0 to 2
Bits 10 and 11	shall be set to ZERO
Bits 16 to 19	shall express, in binary notation, a count of units of seconds, in the range 0 to 9
Bits 24 to 26	shall express, in binary notation, a count of tens of seconds, in the range 0 to 5
Bits 32 to 35	shall express, in binary notation, a count of units of minutes, in the range 0 to 9
Bits 40 to 42	shall express, in binary notation, a count of tens of minutes, in the range 0 to 5
Bits 48 to 51	shall express, in binary notation, a count of units of hours, in the range 0 to 9
Bits 56 and 57	shall express, in binary notation, a count of tens of hours, in the range 0 to 3

14.4.2 Phase bit

Bit 27 shall be set such that there is an even number of ZEROs in the 80-bit Time Code.

The first Track Set pair of VSIT shall have all count bits set to ZERO.

14.4.3 Synchronizing pattern

Bits 64 to 79 shall be set to the synchronizing pattern 0011111111111101

14.4.4 Supplemental Data

The eight groups of Supplemental Data, bits 4 to 7, 12 to 15, 20 to 23, 28 to 31, 36 to 39, 43 to 47, 52 to 55 and 58 to 63 shall be set all ZERO's.

14.4.5 Extent of Time Code

Time Code shall be recorded continuously over the range of n-142 to n+26 with reference to Helical Track Set ID(n) as a minimum.

Section 5 - Requirements for recorded information

15 Recorded information

15.1 Recording area (Figure 55)

The recording area shall be defined as the area between the Logical Beginning of Tape (LBOT) and the Logical End of Tape (LEOT).

The distance from the physical BOT (PBOT) to LBOT shall be

$$l_{371} = 17{,}0 \text{ m} \pm 0{,}5 \text{ m}.$$

The distance from the physical EOT(PEOT) to LEOT shall be

$$l_{372} = 20{,}0 \text{ m max}.$$

15.2 Magnetic tape layout (Figure 56)

There are Valid data areas and Invalid data areas in the recording area.

15.2.1 Valid data areas

There are five kinds of Valid data areas as follows.

Run-up areas, VSIT area, DIT area, Data area and Virtual End of Volume (VEOV) area.

The Run-Up area shall be that distance during which the scanner servo stabilizes.

The length of Run-Up Area shall be

$$l_{373} = 0{,}80 \text{ m} \pm 0{,}05 \text{ m}.$$

The VSIT area shall contain 10 Track Sets as defined in 11.2.5.1.

© ISO/IEC 2001 – All rights reserved

Copyright International Organization for Standardization
Provided by IHS under license with ISO
No reproduction or networking permitted without license from IHS
Not for Resale

A Run-Up Area shall precede a VSIT.

The starting Physical TSID of VSIT shall be 0.

An area reserved for Write Retries shall be within the VSIT and contain 90 Track Sets min and shall be

l_{374} = 0,2 m min.

The DIT area shall contain 40 Track Sets as defined in 15.3.2.

A Run-Up Area shall precede a DIT.

The Data area shall be defined as that area after the Position Tolerance Band of the DIT and before Near EOT (NEOT). The NEOT position is implementation dependent.

The VEOV area shall be defined as that area between NEOT and LEOT.

The VEOV area shall be for recording user data, and any necessary processing which requires recording data on the magnetic tape. The recording session shall be terminated within this VEOV area.

15.2.2 Invalid data areas

The data in an Invalid area (i.e. helical track data, control data) shall be ignored in interchange.

Invalid areas are those between PBOT and LBOT, and those between LEOT and PEOT.

The Position Tolerance Band is an invalid data area and shall be used to provide the positioning tolerance for the protection of the valid data from erasure when updating the management tables (VSIT and DIT).

The size of a Position Tolerance Band shall be

l_{375} = 0,35 m ± 0,05 m.

15.3 Physical TSID

The Physical TSID Time Code signal recorded in the Time Code track shall be converted into hexadecimal data. Each recorded Time Code spans the distance of two Physical Track Sets. A ZERO or ONE shall be appended to the Time Code before the conversion to identify the first and second Physical Track Sets respectively.

The Time Code value for the first Physical TSID of the VSIT shall be set to ZEROs.

© ISO/IEC 2001 – All rights reserved
Copyright International Organization for Standardization
Provided by IHS under license with ISO
No reproduction or networking permitted without license from IHS
Not for Resale

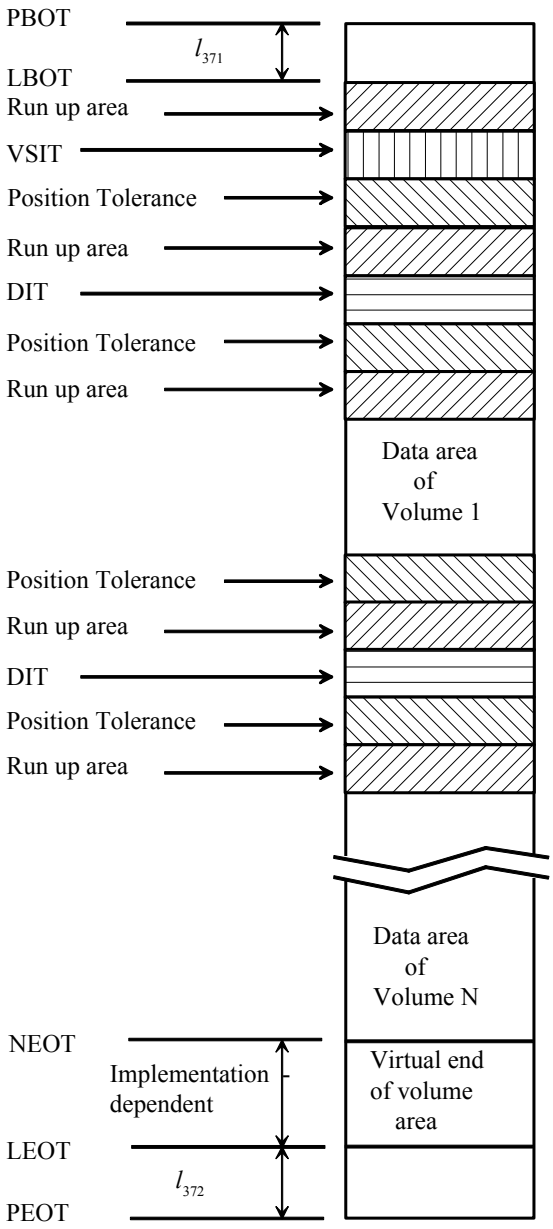

Figure 55 — Magnetic tape layout in multiple volumes

© ISO/IEC 2001 – All rights reserved
Copyright International Organization for Standardization
Provided by IHS under license with ISO
No reproduction or networking permitted without license from IHS
Not for Resale

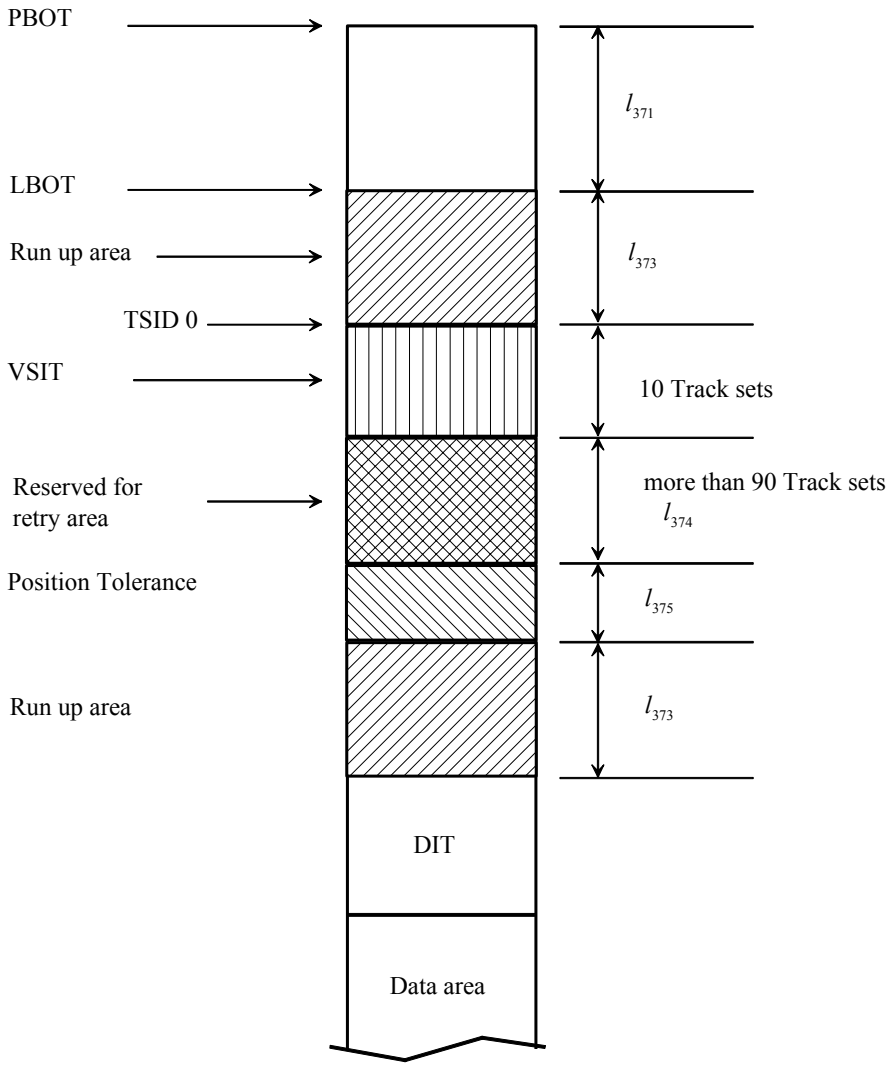

Figure 56 — Location of VSIT

15.3.1 Structure surrounding the VSIT area

The structure of areas containing the VSIT shall comprise the following

a Run-up area
the VSIT
a reserved area for Write Retries
a Position Tolerance Band
and a Run-up area for the following DIT.

15.3.2 Structure of the DIT area

The DIT contains volume and file information in this volume.

The DIT shall include following five tables.

VIT - Volume Information Table	1 Track Set
BST - Bad spot table	1 Track Set
LIDT - Logical ID table	1 Track Set
FIT - File information table	20 Track Sets
Reserved	16 DM Track Sets
UT - Update table	1 Track Set

A DIT area shall comprise 40 track sets.

A DIT shall be recorded at least 3 times and at most 1000 times.

© ISO/IEC 2001 – All rights reserved
Copyright International Organization for Standardization
Provided by IHS under license with ISO
No reproduction or networking permitted without license from IHS
Not for Resale

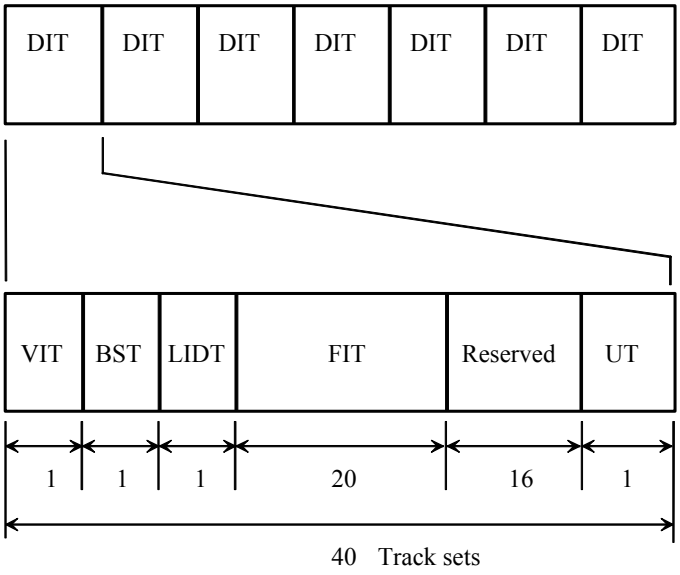

Figure 57 — Structure of the DIT area

15.3.3 Structure of the User Data Area

The User Data Area shall consist of

User Data Track Sets
TM Track Set, identified as either a File Mark or Set Mark Track Set
TM Track Set shall be preceded and followed by DM Track Sets
EOD Track Sets
Dummy Track Sets

Dummy track sets shall be used to fill areas where continuous recording of the control track is required.

The end of the recorded data shall be indicated by writing 16 or more EOD track sets consecutively on the tape.

Section 6 - Write operations

16 Write retry sequence (Figure 58)

To ensure that the quality of recording is sufficient for successful recovery, the write retry sequence may be applied in the recording process.

The information (data, subcode) of a failed Track Set and of following Track Sets may be rewritten into a new physical track location.

If a failed Track Set and following Track Sets are subjected to the write retry process, they shall be rewritten without erasing the original Track Sets.

The start TSID and the ending TSID of the original recorded Track Sets shall be registered into the BST as logically invalid Track Sets.

© ISO/IEC 2001 – All rights reserved

Copyright International Organization for Standardization
Provided by IHS under license with ISO
No reproduction or networking permitted without license from IHS
Not for Resale

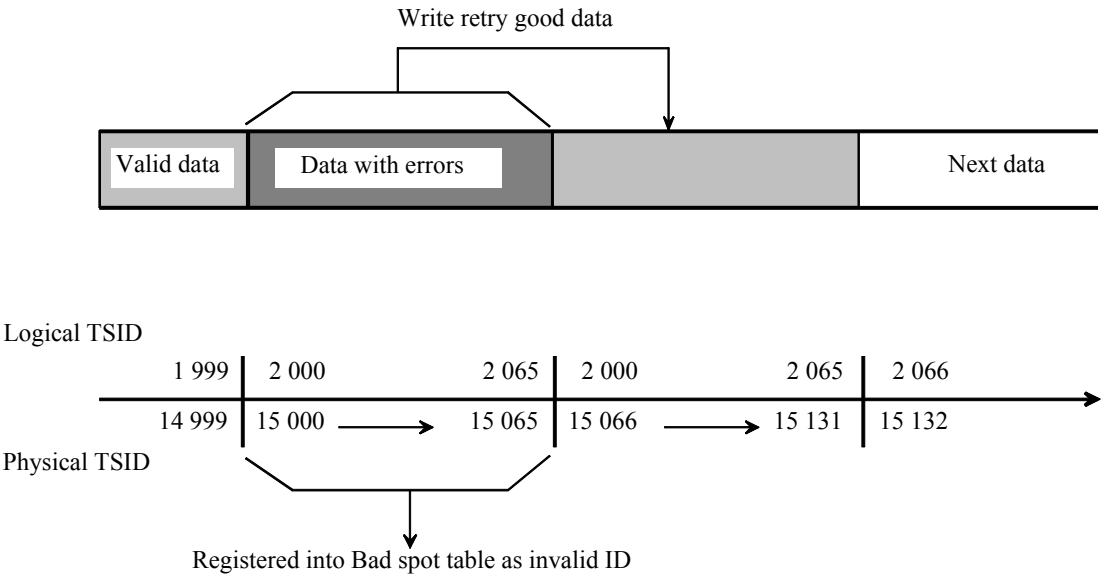

Figure 58 — Write retry sequence

17 Append file operation (Figure 59)

There are four ways to write a new file on the recorded tape.

17.1 Append volume

A new DIT and Logical Volume may be constructed following the last Logical Volume recorded on the tape as follows.

– A Run-Up Area shall be recorded after EOD of the last Logical Volume on the tape.

– The new DIT and Logical Volume shall be written following the Run-Up Area.

– The start Physical TSID of the new VIT and the last Physical TSID of the volume shall be registered in the VSIT.

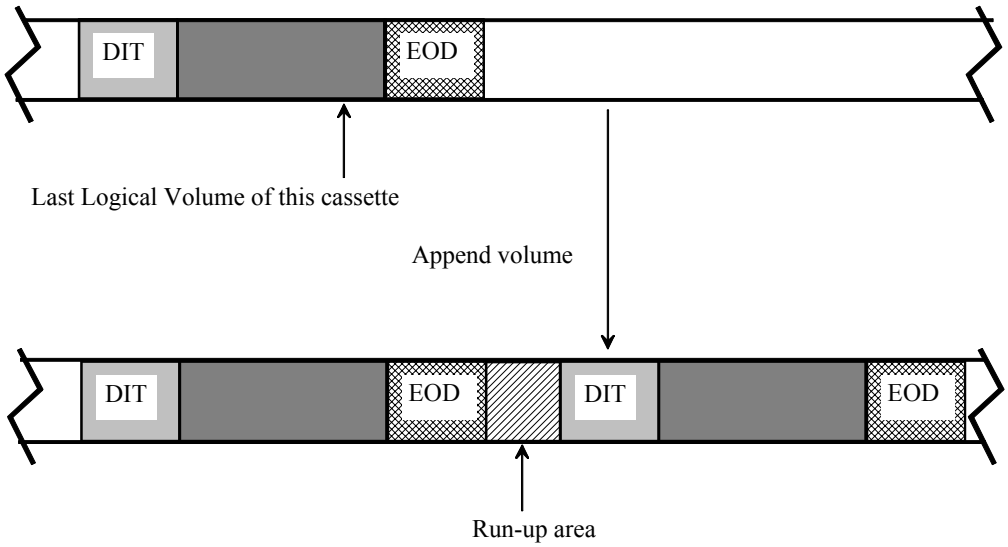

Figure 59 — Append volume

17.2 Append write (Figure 60)

A new file may be appended to the current Logical Volume as follows.

– The file shall be written starting from the end of the first Track Set of the previously recorded 16 or more EOD Track Sets.

– The 'A' bit of the Subcode data field of the first Logical Track Set of the appended file shall be set to ONE.

– The data of LIDT and FIT shall be updated.

© ISO/IEC 2001 – All rights reserved
Copyright International Organization for Standardization
Provided by IHS under license with ISO
No reproduction or networking permitted without license from IHS
Not for Resale

The append operation shall be inhibited if the appending of a file would result in the overwriting of a following Logical Volume.

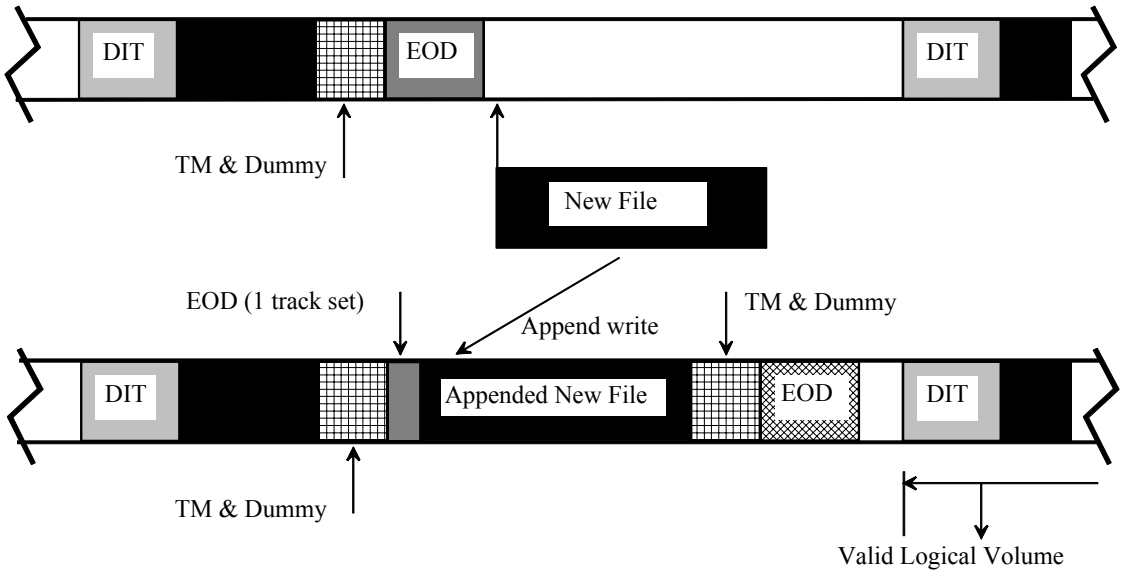

Figure 60 — Append write

17.3 Overwrite (Figure 61)

A new file may be written over a previously recorded file as follows

- The file shall be written following one DM Track Set at the end of the original recorded TM.
- The Overwrite counter shall be incremented by 1 in the Subcode data fields of User data, TM, EOD and DM Track Sets of the newly recorded file.
- The data in LIDT and FIT shall be updated.

If the newly recorded file is shorter than the overwritten original recorded data, the remaining data shall become invalid data and ignored in interchange.

© ISO/IEC 2001 – All rights reserved

Copyright International Organization for Standardization
Provided by IHS under license with ISO
No reproduction or networking permitted without license from IHS
Not for Resale

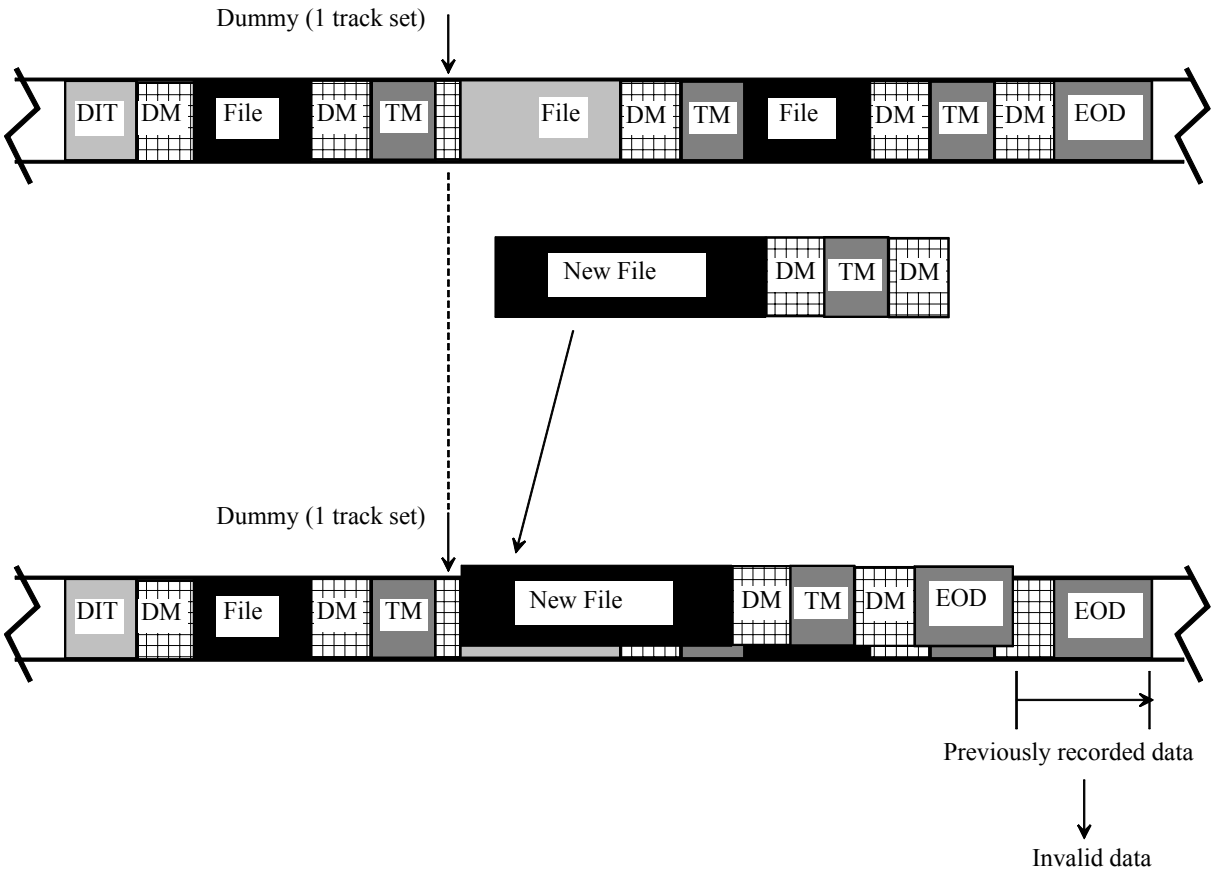

Figure 61 — Overwrite

17.4 File extension (Figure 62)

A file may be recorded as an extension to the current Logical Volume as follows.

– The file shall be written following one DM Track Set at the end of the previously recorded data, overwriting the previously recorded TM.

– The Overwrite counter shall be incremented by 1 in the Subcode data fields of User data, TM, EOD and DM Track Sets of the newly recorded file.

– The data in LIDT and FIT shall be updated.

If the newly recorded file is shorter than the overwritten original recorded data, the remaining data shall become invalid data and ignored in interchange.

© ISO/IEC 2001 – All rights reserved
Copyright International Organization for Standardization
Provided by IHS under license with ISO
No reproduction or networking permitted without license from IHS
Not for Resale

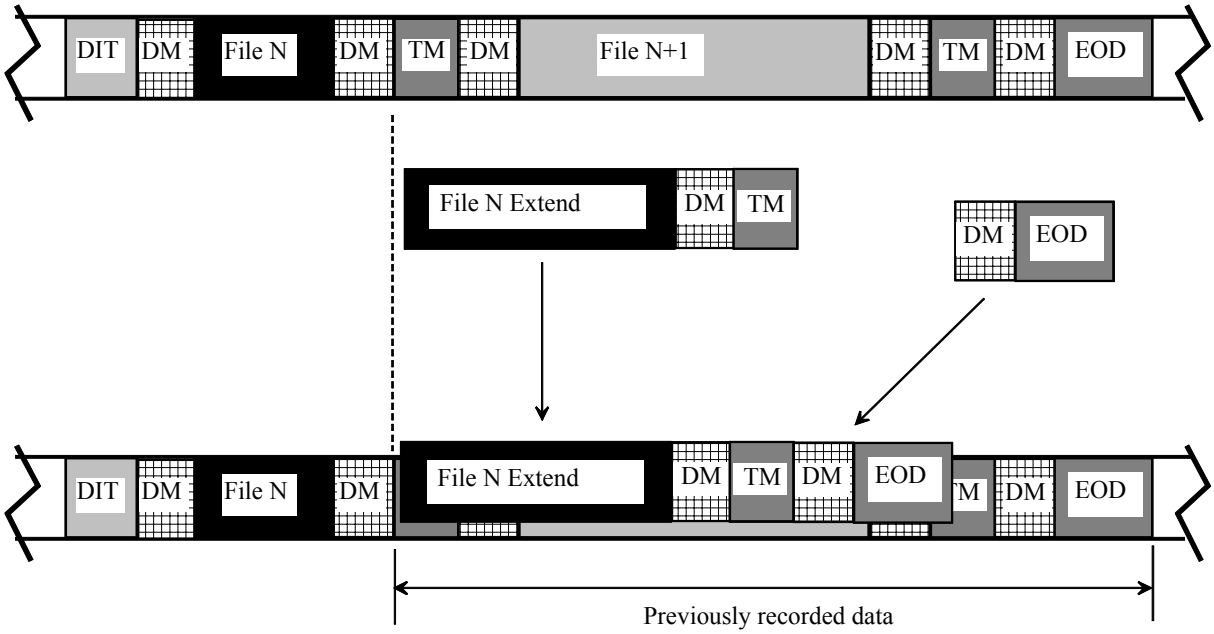

Figure 62 — Extend file

© ISO/IEC 2001 – All rights reserved
Copyright International Organization for Standardization
Provided by IHS under license with ISO
No reproduction or networking permitted without license from IHS
Not for Resale

Annex A
(normative)

Measurement of Signal-to-Noise Ratio

Unless otherwise stated, the test conditions are those defined in clause 10.

A.1 Procedure

The Signal-to-Noise Ratio shall be measured using a spectrum analyzer with a resolution bandwidth of 10 kHz.

1) a.c. erase the tape prior to testing.
2) Record the tape at 6 349 ftpmm
3) Measure the Average Signal Amplitude (Stape) on the next pass (read only).
4) Measure the total noise level (Ntotal) at 41,3 MHz.
5) Measure the read channel noise level (N_{amp}) at 41,3 MHz without a tape loaded but with the scanner motor running.

Tape Noise: $N_{TAPE} = \sqrt{(N_{TOTAL})^2 - (N_{AMP})^2}$

$\frac{N_{AMP}}{N_{TAPE}}$ shall be less than 70 %.

The Signal-to-Noise Ratio is $S/N_{TAPE} = 20\log\frac{S_{TAPE}}{N_{TAPE}}(dB)$.

6) Take the average of at least 64 successive measurements to determine the Signal-to-Noise Ratio for the tape (S/N_{TAPE})
7) Repeat steps 1 to 6 for the Secondary Standard Reference Tape, to obtain S/N_{MSRT}.
   The Signal-to-Noise Ratio characteristic is

   (S/N_{TAPE}) - (S/N_{MSRT}) dB

8) This difference shall meet the requirement of 10.4.

© ISO/IEC 2001 – All rights reserved
Copyright International Organization for Standardization
Provided by IHS under license with ISO
No reproduction or networking permitted without license from IHS
Not for Resale

Annex B

(normative)

Representation 8/9 coding patterns

Decimal	(Hex)	8-bit Bytes		9-bit Bytes	
		MSB	LSB	MSB	LSB
0	(00)	00000000		011000100	
1	(01)	00000001		111000100	
2	(02)	00000010		100100100	
3	(03)	00000011		010100100	
4	(04)	00000100		110100100	
5	(05)	00000101		101100100	
6	(06)	00000110		011100100	
7	(07)	00000111		111100100	
8	(08)	00001000		010010100	
9	(09)	00001001		110010100	
10	(0A)	00001010		011010100	
11	(0B)	00001011		111010100	
12	(0C)	00001100		100110100	
13	(0D)	00001101		010110100	
14	(0E)	00001110		110110100	
15	(0F)	00001111		101110100	
16	(10)	00010000		011110100	
17	(11)	00010001		111110100	
18	(12)	00010010		010001100	
19	(13)	00010011		110001100	
20	(14)	00010100		101001100	
21	(15)	00010101		011001100	
22	(16)	00010110		111001100	
23	(17)	00010111		100101100	
24	(18)	00011000		010101100	
25	(19)	00011001		110101100	
26	(1A)	00011010		101101100	
27	(1B)	00011011		011101100	
28	(1C)	00011100		111101100	
29	(1D)	00011101		100011100	
30	(1E)	00011110		010011100	
31	(1F)	00011111		110011100	
32	(20)	00100000		101011100	
33	(21)	00100001		011011100	
34	(22)	00100010		111011100	
35	(23)	00100011		100111100	
36	(24)	00100100		010111100	
37	(25)	00100101		110111100	
38	(26)	00100110		101111100	
39	(27)	00100111		011111100	
40	(28)	00101000		111111100	
41	(29)	00101001		100100010	
42	(2A)	00101010		101100010	
43	(2B)	00101011		011100010	
44	(2C)	00101100		010010010	
45	(2D)	00101101		110010010	
46	(2E)	00101110		011010010	
47	(2F)	00101111		111010010	
48	(30)	00110000		100110010	
49	(31)	00110001		010110010	
50	(32)	00110010		110110010	
51	(33)	00110011		101110010	
52	(34)	00110100		011110010	
53	(35)	00110101		111110010	
54	(36)	00110110		110001010	
55	(37)	00110111		101001010	
56	(38)	00111000		011001010	
57	(39)	00111001		111001010	
58	(3A)	00111010		100101010	
59	(3B)	00111011		110101010	
60	(3C)	00111100		101101010	
61	(3D)	00111101		011101010	
62	(3E)	00111110		111101010	
63	(3F)	00111111		100011010	
64	(40)	01000000		010011010	
65	(41)	01000001		110011010	
66	(42)	01000010		101011010	
67	(43)	01000011		011011010	

© ISO/IEC 2001 – All rights reserved

Copyright International Organization for Standardization
Provided by IHS under license with ISO
No reproduction or networking permitted without license from IHS
Not for Resale

Decimal	(Hex)	8-bit Bytes MSB LSB	9-bit Bytes MSB LSB
68	(44)	01000100	111011010
69	(45)	01000101	100111010
70	(46)	01000110	010111010
71	(47)	01000111	110111010
72	(48)	01001000	101111010
73	(49)	01001001	011111010
74	(4A)	01001010	111111010
75	(4B)	01001011	011000110
76	(4C)	01001100	111000110
77	(4D)	01001101	100100110
78	(4E)	01001110	010100110
79	(4F)	01001111	110100110
80	(50)	01010000	101100110
81	(51)	01010001	011100110
82	(52)	01010010	111100110
83	(53)	01010011	010010110
84	(54)	01010100	110010110
85	(55)	01010101	011010110
86	(56)	01010110	111010110
87	(57)	01010111	100110110
88	(58)	01011000	010110110
89	(59)	01011001	110110110
90	(5A)	01011010	101110110
91	(5B)	01011011	011110110
92	(5C)	01011100	111110110
93	(5D)	01011101	010001110
94	(5E)	01011110	110001110
95	(5F)	01011111	101001110
96	(60)	01100000	011001110
97	(61)	01100001	111001110
98	(62)	01100010	100101110
99	(63)	01100011	010101110
100	(64)	01100100	110101110
101	(65)	01100101	101101110
102	(66)	01100110	011101110
103	(67)	01100111	111101110
104	(68)	01101000	100011110
105	(69)	01101001	010011110
106	(6A)	01101010	110011110
107	(6B)	01101011	101011110
108	(6C)	01101100	011011110
109	(6D)	01101101	111011110
110	(6E)	01101110	100111110
111	(6F)	01101111	010111110
112	(70)	01110000	110111110
113	(71)	01110001	101111110
114	(72)	01110010	011111110
115	(73)	01110011	111111110
116	(74)	01110100	010010001
117	(75)	01110101	110010001
118	(76)	01110110	111010001
119	(77)	01110111	100110001
120	(78)	01111000	010110001
121	(79)	01111001	110110001
122	(7A)	01111010	101110001
123	(7B)	01111011	111110001
124	(7C)	01111100	110001001
125	(7D)	01111101	101001001
126	(7E)	01111110	011001001
127	(7F)	01111111	111001001
128	(80)	10000000	100101001
129	(81)	10000001	110101001
130	(82)	10000010	101101001
131	(83)	10000011	011101001
132	(84)	10000100	111101001
133	(85)	10000101	100011001
134	(86)	11000110	010011001
135	(87)	11000111	110011001
136	(88)	10001000	101011001
137	(89)	10001001	011011001
138	(8A)	10001010	111011001
139	(8B)	10001011	100111001

Copyright International Organization for Standardization
Provided by IHS under license with ISO
No reproduction or networking permitted without license from IHS
Not for Resale
© ISO/IEC 2001 – All rights reserved

Decimal	(Hex)	8-bit Bytes MSB	8-bit Bytes LSB	9-bit Bytes MSB	9-bit Bytes LSB
140	(8C)	10001100		010111001	
141	(8D)	10001101		110111001	
142	(8E)	10001110		101111001	
143	(8F)	10001111		011111001	
144	(90)	10010000		111111001	
145	(91)	10010001		011000101	
146	(92)	10010010		111000101	
147	(93)	10010011		100100101	
148	(94)	10010100		010100101	
149	(95)	10010101		110100101	
150	(96)	10010110		101100101	
151	(97)	10010111		011100101	
152	(98)	10011000		111100101	
153	(99)	10011001		010010101	
154	(9A)	10011010		110010101	
155	(9B)	10011011		011010101	
156	(9C)	10011100		111010101	
157	(9D)	10011101		100110101	
158	(9E)	10011110		010110101	
159	(9F)	10011111		110110101	
160	(A0)	10100000		101110101	
161	(A1)	10100001		011110101	
162	(A2)	10100010		111110101	
163	(A3)	10100011		010001101	
164	(A4)	10100100		110001101	
165	(A5)	10100101		101001101	
166	(A6)	10100110		011001101	
167	(A7)	10100111		111001101	
168	(A8)	10101000		100101101	
169	(A9)	10101001		010101101	
170	(AA)	10101010		110101101	
171	(AB)	10101011		101101101	
172	(AC)	10101100		011101101	
173	(AD)	10101101		111101101	
174	(AE)	10101110		100011101	
175	(AF)	10101111		010011101	
176	(B0)	10110000		110011101	
177	(B1)	10110001		101011101	
178	(B2)	10110010		011011101	
179	(B3)	10110011		111011101	
180	(B4)	10110100		100111101	
181	(B5)	10110101		010111101	
182	(B6)	10110110		110111101	
183	(B7)	10110111		101111101	
184	(B8)	10111000		011111101	
185	(B9)	10111001		111111101	
186	(BA)	10111010		100100011	
187	(BB)	10111011		101100011	
188	(BC)	10111100		011100011	
189	(BD)	10111101		010010011	
190	(BE)	10111110		110010011	
191	(BF)	10111111		011010011	
192	(C0)	11000000		111010011	
193	(C1)	11000001		100110011	
194	(C2)	11000010		010110011	
195	(C3)	11000011		110110011	
196	(C4)	11000100		101110011	
197	(C5)	11000101		011110011	
198	(C6)	11000110		111110011	
199	(C7)	11000111		110001011	
200	(C8)	11001000		101001011	
201	(C9)	11001001		011001011	
202	(CA)	11001010		111001011	
203	(CB)	11001011		100101011	
204	(CC)	11001100		110101011	
205	(CD)	11001101		101101011	
206	(CE)	11001110		011101011	
207	(CF)	11001111		111101011	
208	(D0)	11010000		100011011	
209	(D1)	11010001		010011011	
210	(D2)	11010010		110011011	
211	(D3)	11010011		101011011	

© ISO/IEC 2001 – All rights reserved

Copyright International Organization for Standardization
Provided by IHS under license with ISO
No reproduction or networking permitted without license from IHS
Not for Resale

Decimal	(Hex)	8-bit Bytes MSB LSB	9-bit Bytes MSB LSB
212	(D4)	11010100	011011011
213	(D5)	11010101	111011011
214	(D6)	11010110	100111011
215	(D7)	11010111	010111011
216	(D8)	11011000	110111011
217	(D9)	11011001	101111011
218	(DA)	11011010	011111011
219	(DB)	11011011	111111011
220	(DC)	11011100	011000111
221	(DD)	11011101	111000111
222	(DE)	11011110	100100111
223	(DF)	11011111	010100111
224	(E0)	11100000	110100111
225	(E1)	11100001	101100111
226	(E2)	11100010	011100111
227	(E3)	11100011	111100111
228	(E4)	11100100	010010111
229	(E5)	11100101	110010111
230	(E6)	11100110	011010111
231	(E7)	11100111	111010111
232	(E8)	11101000	100110111
233	(E9)	11101001	010110111
234	(EA)	11101010	110110111
235	(EB)	11101011	101110111
236	(EC)	11101100	011110111
237	(ED)	11101101	111110111
238	(EE)	11101110	010001111
239	(EF)	11101111	110001111
240	(F0)	11110000	101001111
241	(F1)	11110001	011001111
242	(F2)	11110010	111001111
243	(F3)	11110011	100101111
244	(F4)	11110100	010101111
245	(F5)	11110101	110101111
246	(F6)	11110110	101101111
247	(F7)	11110111	011101111
248	(F8)	11111000	111101111
249	(F9)	11111001	100011111
250	(FA)	11111010	010011111
251	(FB)	11111011	110011111
252	(FC)	11111100	101011111
253	(FD)	11111101	011011111
254	(FE)	11111110	111011111
255	(FF)	11111111	100111111

© ISO/IEC 2001 – All rights reserved
Copyright International Organization for Standardization
Provided by IHS under license with ISO
No reproduction or networking permitted without license from IHS
Not for Resale

Annex C
(informative)

Recommendations for transportation

C.1 Environment

It is recommended that during transportation the cassettes are kept within the following conditions:

Temperature: -40 °C to 45 °C

Relative humidity: 5 % to 80 %

Maximum wet bulb temperature: 26 °C

There should be no condensation in or on the cassette.

C.2 Hazards

Transportation of tape cassettes involves three basic potential hazards.

C.2.1 Impact loads and vibrations

The following recommendations should minimize damage to tape cassettes during transportation.

Avoid mechanical loads that would distort the cassette shape.

Avoid dropping the cassette more than 1 m.

Cassettes should be fitted into a rigid box containing adequate shock-absorbent material.

The final box should have a clean interior and a construction that provides sealing to prevent the ingress of dirt and water.

The orientation of the cassettes inside the final box should be such that the axes of the tape reels are horizontal.

The final box should be clearly marked to indicate its correct orientation.

C.2.2 Extremes of temperature and humidity

Extreme changes in temperature and humidity should be avoided whenever possible. Whenever a cassette is received it should be conditioned in the operating environment for a period of at least 24 h.

C.2.3 Effects of stray magnetic fields

A normal spacing of not less than 80 mm should exist between the cassette and the outer surface of the shipping container to minimize the risk of corruption.

© ISO/IEC 2001 – All rights reserved

Copyright International Organization for Standardization
Provided by IHS under license with ISO
No reproduction or networking permitted without license from IHS
Not for Resale

Annex D
(informative)

Inhibitor tape

An inhibitor tape is any tape that degrades the performance of the tape drive or other tapes. Certain tape characteristics can contribute to poor tape drive performance. Tapes that exhibit these characteristics may not give satisfactory performance, can result in excessive errors and can interfere with the subsequent performances of other tapes. Tapes to be used in this cassette should not be inhibitor tapes.

D.1 Inhibitor characteristics

These characteristics include:

- High abrasivity.
- High friction to tape path components.
- Poor edge conditions.
- Excessive tape wear residual products.
- Electrostatic charge build-up to the tape or tape path components.
- Interlayer slippage.
- Transfer of recording surface coating to the back of the next tape layer.
- Separation of tape constituents causing deposits that may lead to tape sticking or poor performance of other tapes.

--`,,```,,,,````-`-`,,`,,`,`,,`---

© ISO/IEC 2001 – All rights reserved
Copyright International Organization for Standardization
Provided by IHS under license with ISO
No reproduction or networking permitted without license from IHS
Not for Resale

ICS 35.220.23

Price based on 100 pages

© ISO/IEC 2001 – All rights reserved

Copyright International Organization for Standardization
Provided by IHS under license with ISO
No reproduction or networking permitted without license from IHS

Not for Resale