INTERNATIONAL STANDARD

**ISO/IEC 19794-7**

First edition
2007-06-15

# Information technology — Biometric data interchange formats —

## Part 7: Signature/sign time series data

*Technologies de l'information — Formats d'échange de données biométriques —*

*Partie 7: Données de série chronologique de signature/signe*

Reference number
ISO/IEC 19794-7:2007(E)

© ISO/IEC 2007

Copyright International Organization for Standardization
Provided by IHS under license with ISO
No reproduction or networking permitted without license from IHS

Not for Resale

**PDF disclaimer**

This PDF file may contain embedded typefaces. In accordance with Adobe's licensing policy, this file may be printed or viewed but shall not be edited unless the typefaces which are embedded are licensed to and installed on the computer performing the editing. In downloading this file, parties accept therein the responsibility of not infringing Adobe's licensing policy. The ISO Central Secretariat accepts no liability in this area.

Adobe is a trademark of Adobe Systems Incorporated.

Details of the software products used to create this PDF file can be found in the General Info relative to the file; the PDF-creation parameters were optimized for printing. Every care has been taken to ensure that the file is suitable for use by ISO member bodies. In the unlikely event that a problem relating to it is found, please inform the Central Secretariat at the address given below.



**COPYRIGHT PROTECTED DOCUMENT**

© ISO/IEC 2007

All rights reserved. Unless otherwise specified, no part of this publication may be reproduced or utilized in any form or by any means, electronic or mechanical, including photocopying and microfilm, without permission in writing from either ISO at the address below or ISO's member body in the country of the requester.

ISO copyright office
Case postale 56 • CH-1211 Geneva 20
Tel. + 41 22 749 01 11
Fax + 41 22 749 09 47
E-mail copyright@iso.org
Web www.iso.org

Published in Switzerland



Copyright International Organization for Standardization
Provided by IHS under license with ISO
No reproduction or networking permitted without license from IHS

© ISO/IEC 2007 – All rights reserved

Not for Resale

# Contents

Page

**Foreword** ... iv

**1 Scope** ... 1

**2 Conformance** ... 1

**3 Normative references** ... 1

**4 Terms and definitions** ... 2

**5 Conventions** ... 4
**5.1 Coordinate system** ... 4
**5.2 Octet order** ... 4
**5.3 Registered format type identifiers** ... 4

**6 Channels** ... 5
**6.1 General** ... 5
**6.2 Pen position channels: X, Y, Z** ... 5
**6.3 Pen velocity channels: VX, VY** ... 6
**6.4 Pen acceleration channels: AX, AY** ... 6
**6.5 Time channel: T** ... 6
**6.6 Time difference channel: DT** ... 6
**6.7 Pen tip force channel: F** ... 6
**6.8 Tip switch state channel: S** ... 6
**6.9 Pen orientation channels: TX, TY, Az, El, R** ... 6

**7 Full format** ... 7
**7.1 Introduction** ... 7
**7.2 BDB organisation** ... 7
**7.3 BDB header** ... 7
**7.4 BDB body** ... 11

**8 Compact format** ... 12
**8.1 Introduction** ... 12
**8.2 Matching algorithm parameters template** ... 13
**8.3 Embedment in a CBEFF data structure** ... 14
**8.4 BDB body** ... 15

**Annex A** (informative) **Best practices — Data acquisition** ... 16

**Annex B** (informative) **ASN.1 specification of the data interchange formats** ... 17

**Annex C** (informative) **Signature/sign coding examples** ... 21

**Bibliography** ... 23

© ISO/IEC 2007 – All rights reserved

Copyright International Organization for Standardization
Provided by IHS under license with ISO
No reproduction or networking permitted without license from IHS
Not for Resale

# Foreword

ISO (the International Organization for Standardization) and IEC (the International Electrotechnical Commission) form the specialized system for worldwide standardization. National bodies that are members of ISO or IEC participate in the development of International Standards through technical committees established by the respective organization to deal with particular fields of technical activity. ISO and IEC technical committees collaborate in fields of mutual interest. Other international organizations, governmental and non-governmental, in liaison with ISO and IEC, also take part in the work. In the field of information technology, ISO and IEC have established a joint technical committee, ISO/IEC JTC 1.

International Standards are drafted in accordance with the rules given in the ISO/IEC Directives, Part 2.

The main task of the joint technical committee is to prepare International Standards. Draft International Standards adopted by the joint technical committee are circulated to national bodies for voting. Publication as an International Standard requires approval by at least 75 % of the national bodies casting a vote.

Attention is drawn to the possibility that some of the elements of this document may be the subject of patent rights. ISO and IEC shall not be held responsible for identifying any or all such patent rights.

ISO/IEC 19794-7 was prepared by Joint Technical Committee ISO/IEC JTC 1, *Information technology*, Subcommittee SC 37, *Biometrics*.

ISO/IEC 19794 consists of the following parts, under the general title *Information technology — Biometric data interchange formats*:

— *Part 1: Framework*

— *Part 2: Finger minutiae data*

— *Part 3: Finger pattern spectral data*

— *Part 4: Finger image data*

— *Part 5: Face image data*

— *Part 6: Iris image data*

— *Part 7: Signature/sign time series data*

— *Part 8: Finger pattern skeletal data*

— *Part 9: Vascular image data*

— *Part 10: Hand geometry silhouette data*

The following part is under preparation:

— *Part 11: Signature/sign processed dynamic data*


© ISO/IEC 2007 – All rights reserved
Copyright International Organization for Standardization
Provided by IHS under license with ISO
No reproduction or networking permitted without license from IHS
Not for Resale

# Information technology — Biometric data interchange formats —

## Part 7: Signature/sign time series data

## 1 Scope

For the purposes of biometric verification and/or identification, this part of ISO/IEC 19794 specifies a concept and data interchange formats for dynamic signature/sign behavioural data captured in the form of a time series using devices such as digitizing tablets or advanced pen systems. The data interchange formats are generic in that they may be applied and used in a wide range of application areas where handwritten signs or signatures are involved. No application-specific requirements or features are addressed in this part of ISO/IEC 19794. This part of ISO/IEC 19794 contains definitions of relevant terms, a description of what data is captured, two data formats for containing the data — one for general use and one compact format for use with smart cards and other tokens — alongside examples of data block contents and best practice in capture.

Specifying which of the format types and which options defined in this part of ISO/IEC 19794 are to be applied in a particular application is out of the scope of this part of ISO/IEC 19794; this needs to be defined in application-specific requirements specifications or application profiles. It is advisable that stored and transmitted biometric data be time-stamped and that cryptographic techniques be used to protect their authenticity, integrity and confidentiality; however such provisions are beyond the scope of this part of ISO/IEC 19794.

## 2 Conformance

A biometric data block conforms to this part of ISO/IEC 19794 if it satisfies the format requirements with respect to its structure, with respect to relations among its fields, and with respect to relations between its fields and the underlying input that are specified within the normative clauses of this part of ISO/IEC 19794.

## 3 Normative references

The following referenced documents are indispensable for the application of this document. For dated references, only the edition cited applies. For undated references, the latest edition of the referenced document (including any amendments) applies.

ISO/IEC 19785-1, *Information technology — Common Biometric Exchange Formats Framework — Part 1: Data element specification*

ISO/IEC 19785-2, *Information technology — Common Biometric Exchange Formats Framework — Part 2: Procedures for the operation of the Biometric Registration Authority*

© ISO/IEC 2007 – All rights reserved

Copyright International Organization for Standardization
Provided by IHS under license with ISO
No reproduction or networking permitted without license from IHS
Not for Resale

ISO/IEC 19785-3, *Information technology — Common Biometric Exchange Formats Framework — Part 3: Patron format specifications* [1)]

ISO/IEC 19794-1, *Information technology — Biometric data interchange formats — Part 1: Framework*

## 4 Terms and definitions

For the purposes of this document, the terms and definitions given in ISO/IEC 19794-1 and the following apply.

**4.1**
**signature/sign**
handwritten signature or handwritten personal sign

**4.2**
**time series**
sequence of values sampled at successive points in time

**4.3**
**biometric data block**
**BDB**
block of data with a defined format that contains one or more biometric samples or biometric templates

**4.4**
**channel**
data item (acquired, intermediate or processed) recorded in the form of a time series

NOTE Examples include pen position, pen tip force and tilt.

**4.5**
**pen azimuth**
angle measured clockwise from the positive y axis to the perpendicular projection of the pen onto the writing plane

NOTE For an illustration, see Figure 1 (upper left and lower left).

**4.6**
**pen elevation**
angle measured counter-clockwise from the perpendicular projection of the pen onto the writing plane to the pen

NOTE For an illustration, see Figure 1 (upper left and lower left).

**4.7**
**pen tilt along the x axis**
angle measured clockwise from the positive z axis to the perpendicular projection of the pen onto the x,z plane

NOTE For an illustration, see Figure 1 (upper right and lower left).

**4.8**
**pen tilt along the y axis**
angle measured clockwise from the positive z axis to the perpendicular projection of the pen onto the y,z plane

NOTE For an illustration, see Figure 1 (upper right and lower left).

1) To be published.


© ISO/IEC 2007 – All rights reserved
Copyright International Organization for Standardization
Provided by IHS under license with ISO
No reproduction or networking permitted without license from IHS
Not for Resale

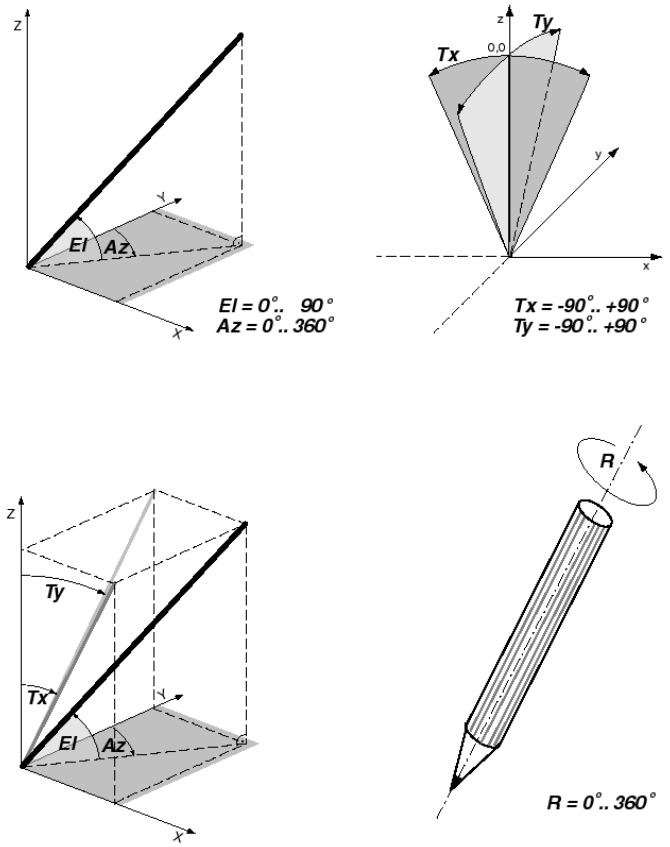


**Figure 1 — Azimuth and elevation angles (upper left), tilt angles (upper right), pen orientation decomposition (lower left), and pen rotation (lower right)**

**4.9**
**pen rotation**
angle of rotation of the pen about its longitudinal axis measured counter-clockwise from a device-specific reference rotational position

NOTE For an illustration, see Figure 1 (lower right).

**4.10**
**X jitter**
standard deviation of 100 x-coordinate samples from a stationary pen

**4.11**
**Y jitter**
standard deviation of 100 y-coordinate samples from a stationary pen

**4.12**
**X resolution**
number of dots per centimetre that the capture device resolves in the X (horizontal) direction

**4.13**
**Y resolution**
number of dots per centimetre that the capture device resolves in the Y (vertical) direction

**4.14**
**Z resolution**
number of dots per centimetre that the capture device resolves in the Z direction

--`,,```,,,,````-`-`,,`,,`,`,,`---
© ISO/IEC 2007 – All rights reserved
Copyright International Organization for Standardization
Provided by IHS under license with ISO
No reproduction or networking permitted without license from IHS
Not for Resale

**4.15**
**sampling rate**
rate in samples per second at which channel values are recorded

**4.16**
**F resolution**
number of units per millinewton that the capture device resolves in the downwards force of the pen tip on the writing plane

# 5 Conventions

## 5.1 Coordinate system

The coordinate system used to express the pen position shall be a three-dimensional Cartesian coordinate system. The x axis shall be the horizontal axis of the writing plane, with x coordinates increasing to the right. The y axis shall be the vertical axis of the writing plane, with y coordinates increasing upwards. The z axis shall be the axis perpendicular to the writing plane, with z coordinates increasing upwards out of the writing plane starting from 0.

## 5.2 Octet order

The more significant octets of any multi-octet quantity are stored at lower addresses in memory than (and are transmitted before) less significant octets.

Within an octet, the bits are numbered from 8 to 1, where bit 8 is the 'most significant bit' (MSB) and bit 1 the 'least significant bit' (LSB).

## 5.3 Registered format type identifiers

The biometric data block (BDB) specified in this part of ISO/IEC 19794 shall be embedded in a CBEFF-compliant structure. The structure of a signature/sign time series biometric information record (BIR) is depicted in Figure 2.

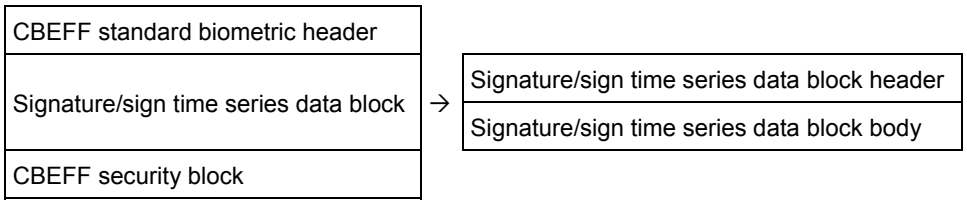


**Figure 2 — Overview of a signature/sign time series BIR**

NOTE The CBEFF security block holds data that enables the integrity and/or the originator of the signature/ sign time series BIR to be verified [(electronic signature or message authentication code (MAC)].

A CBEFF standard biometric header includes the data elements format owner and format type. Format owner and format type shall be encoded according to ISO/IEC 19785 (CBEFF). The format owner is ISO/IEC JTC 1/SC 37 with the IBIA registered format owner identifier 257 ($0101_{Hex}$).

The registrations listed in Table 1 have been made with the CBEFF Registration Authority (see ISO/IEC 19785-2) to identify the signature/sign time series full format and the signature/sign time series compact format.


© ISO/IEC 2007 – All rights reserved
Copyright International Organization for Standardization
Provided by IHS under license with ISO
No reproduction or networking permitted without license from IHS
Not for Resale

**Table 1 — Format type identifiers**

| CBEFF BDB format type identifier | Short name | Full object identifier |
|---|---|---|
| 14 ($000e_{Hex}$) | signature-sign-time-series-full | {iso(1) registration-authority(1) cbeff(19785) organizations(0) 257 bdbs(0) signature-sign-time-series-full(14)} |
| 15 ($000f_{Hex}$) | signature-sign-time-series-compact | {iso(1) registration-authority(1) cbeff(19785) organizations(0) 257 bdbs(0) signature-sign-time-series-compact(16)} |

# 6 Channels

## 6.1 General

Table 2 lists the channel names and their meanings. Signature/sign behavioural data captured with different capture devices or used in different applications may contain data from different channels. Inclusion of the X and Y channels is mandatory. Either the T channel or the DT channel must be present, or uniform sampling (constant time difference between adjacent sample points) must be indicated. Inclusion of the other channels is optional.

**Table 2 — Channels**

| Channel name | Interpretation |
|---|---|
| X | x coordinate (horizontal pen position) |
| Y | y coordinate (vertical pen position) |
| Z | z coordinate (height of pen above the writing plane) |
| VX | velocity in x direction |
| VY | velocity in y direction |
| AX | acceleration in x direction |
| AY | acceleration in y direction |
| T | time |
| DT | time difference |
| F | pen tip force (pressure) |
| S | tip switch state (touching/not touching the writing plane) |
| TX | tilt along the x axis |
| TY | tilt along the y axis |
| Az | azimuth angle of the pen (yaw) |
| El | elevation angle of the pen (pitch) |
| R | rotation (rotation about the pen axis) |

## 6.2 Pen position channels: X, Y, Z

There are 3 channels defined for recording pen position data in the three-dimensional space. The horizontal and vertical pen position in the writing plane is recorded in the X and Y channels, respectively. The height of the pen above the writing plane is recorded in the Z channel.

The unit of measurement is metres (m). To restore the actual values, the integer values given in the BDB body are to be divided by a scaling value given in the BDB header. By choosing appropriate scaling values, different resolutions can be expressed for several applications.

--`,,```,,,,````-`-`,,`,,`,`,,`---
© ISO/IEC 2007 – All rights reserved
Copyright International Organization for Standardization
Provided by IHS under license with ISO
No reproduction or networking permitted without license from IHS
Not for Resale

### 6.3 Pen velocity channels: VX, VY

The horizontal and vertical pen velocity in the writing plane is recorded in the VX and VY channels, respectively.

The unit of measurement is metres per second (m/s). To restore the actual values, the integer values given in the BDB body are to be divided by a scaling value given in the BDB header. By choosing appropriate scaling values, different resolutions can be expressed for several applications.

### 6.4 Pen acceleration channels: AX, AY

The horizontal and vertical pen acceleration in the writing plane is recorded in the AX and AY channels, respectively.

The unit of measurement is metres per square second ($m/s^2$). To restore the actual values, the integer values given in the BDB body are to be divided by a scaling value given in the BDB header. By choosing appropriate scaling values, different resolutions can be expressed for several applications.

### 6.5 Time channel: T

The T channel is defined for recording time data relative to the first sample.

The unit of measurement is seconds (s). To restore the actual values, the integer values given in the BDB body are to be divided by a scaling value given in the BDB header. By choosing appropriate scaling values, different resolutions can be expressed for several applications.

### 6.6 Time difference channel: DT

The DT channel is defined for recording time data relative to the previous sample.

The unit of measurement is seconds (s). To restore the actual values, the integer values given in the BDB body are to be divided by a scaling value given in the BDB header. By choosing appropriate scaling values, different resolutions can be expressed for several applications.

### 6.7 Pen tip force channel: F

The F channel is defined for recording pen forces (pressure) data.

The unit of measurement is Newton (N). To restore the actual values, the integer values given in the BDB body are to be divided by a scaling value given in the BDB header. By choosing appropriate scaling values, different resolutions can be expressed for several applications.

### 6.8 Tip switch state channel: S

The S channel is defined for recording whether the pen touches the writing plane or not. The data values shall be 0 in case of non-touching and 1 in case of touching.

### 6.9 Pen orientation channels: TX, TY, Az, El, R

There are 5 channels defined for recording pen orientation data. Implementers may choose to use either azimuth and elevation or tilt angles. The third degree of freedom in orientation is defined as the rotation of the pen about its axis. All 5 pen orientation channels are optional.

The unit of measurement is degree (°).To restore the actual values, the integer values given in the BDB body are to be divided by a scaling value given in the BDB header. By choosing appropriate scaling values, different resolutions can be expressed for several applications.


© ISO/IEC 2007 – All rights reserved
Copyright International Organization for Standardization
Provided by IHS under license with ISO
No reproduction or networking permitted without license from IHS
Not for Resale

# 7 Full format

## 7.1 Introduction

The signature/sign time series data full format shall be used to achieve interoperability between capture devices used for the purposes of capturing signature/sign data for biometric verification or identification as well as some form of interoperability between biometric systems. A signature/sign time series data block in this format contains descriptive information about the structure and contents of the data block.

## 7.2 BDB organisation

The organisation of the BDB shall be as follows:

a) mandatory variable-length BDB header containing information about the overall BDB,

b) mandatory BDB body.

Figure 3 depicts a signature/sign time series data block in full format. The solid boxes indicate fields that must be present. The dashed boxes indicate optional fields. The length of each field in bytes is indicated in parentheses at the bottom of the corresponding box. The ellipses indicate that more fields of the same format may follow.

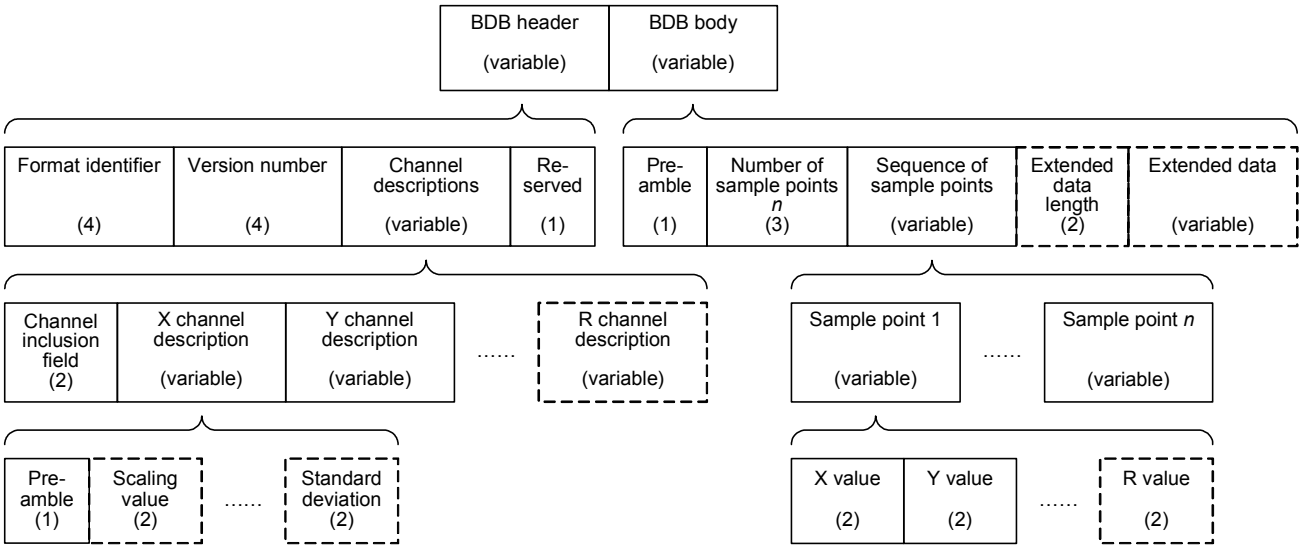


**Figure 3 — Signature/sign time series data block in full format**

## 7.3 BDB header

### 7.3.1 General

The BDB header shall contain information about the overall signature/sign time series data block. The structure of the header shall be as defined in Table 3 and in the following subclauses.

--`,,```,,,,````-`-`,,`,,`,`,,`---

© ISO/IEC 2007 – All rights reserved
Copyright International Organization for Standardization
Provided by IHS under license with ISO
No reproduction or networking permitted without license from IHS
Not for Resale

**Table 3 — Signature/sign time series data block header**

| BDB header field | Number of octets | Comments |
|---|---|---|
| Format identifier | 4 | ASCII “SDI” followed by a zero octet |
| Version number of this part of ISO/IEC 19794 | 4 | “ 10” followed by a zero octet for the first issue of this part of ISO/IEC 19794 |
| Channel descriptions | variable | Sequence of technical characteristics of the present channels |
| Reserved | 1 | Initially $00_{Hex}$ |

### 7.3.2 Format identifier

The signature/sign time series data block shall begin with the three ASCII characters “SDI” to identify the data block as following the full format defined in this part of ISO/IEC 19794, followed by a zero octet as a string terminator ($5344\ 4900_{Hex}$).

### 7.3.3 Version number of this part of ISO/IEC 19794

The version number for the version of this part of ISO/IEC 19794 used in constructing the signature/sign time series data block shall be placed in four octets. This version number shall consist of three ASCII characters followed by a zero octet as a string terminator. The first and second character shall represent the major revision number and the third character will represent the minor revision number. Upon approval of this part of ISO/IEC 19794, the version number shall be “ 10” ($203130_{Hex}$, an ASCII space followed by an ASCII ‘1’ and an ASCII ‘0’).

### 7.3.4 Channel descriptions

#### 7.3.4.1 Channel inclusion field

The channel descriptions field shall begin with a channel inclusion field indicating the presence or absence of channels. The channel inclusion field shall consist of 2 octets. Each bit shall correspond to a channel as shown in Table 4. A bit value of 1 shall encode the presence of the corresponding channel; a bit value of 0 shall encode the absence of the corresponding channel.

As an example, Figure 4 shows the channel inclusion field for signature/sign data including the channels X, Y, T, F, S, Az, El and R.

| Octet 1 | | | | | | | | Octet 2 | | | | | | | |
|---|---|---|---|---|---|---|---|---|---|---|---|---|---|---|---|
| 1 | 1 | 0 | 0 | 0 | 0 | 0 | 1 | 0 | 1 | 1 | 0 | 0 | 1 | 1 | 1 |

**Figure 4 — Example of a channel inclusion field**

--`,,```,,,,````-`-`,,`,,`,`,,`---



© ISO/IEC 2007 – All rights reserved
Copyright International Organization for Standardization
Provided by IHS under license with ISO
No reproduction or networking permitted without license from IHS
Not for Resale

**Table 4 — Format of the channel inclusion field**

| Channel name | Octet | Bit position |
|---|---|---|
| X | 1 | 8 (MSB) |
| Y | 1 | 7 |
| Z | 1 | 6 |
| VX | 1 | 5 |
| VY | 1 | 4 |
| AX | 1 | 3 |
| AY | 1 | 2 |
| T | 1 | 1 (LSB) |
| DT | 2 | 8 (MSB) |
| F | 2 | 7 |
| S | 2 | 6 |
| TX | 2 | 5 |
| TY | 2 | 4 |
| Az | 2 | 3 |
| El | 2 | 2 |
| R | 2 | 1 (LSB) |

#### 7.3.4.2 Channel description preamble

The channel inclusion field shall be followed by a sequence of channel descriptions for the channels indicated as present in the channel inclusion field. The order of the channel descriptions is determined by the order of indicated inclusion within the channel inclusion field (Table 4) starting with the X channel. The channel descriptions are mandatory for all channels present in the signature/sign time series data block.

Each channel description shall begin with a preamble. Each channel description preamble shall consist of 1 octet.

Each of the bits 4 through 8 of a channel description preamble shall correspond to a channel attribute as shown in Table 5. A bit value of 1 shall encode the presence of the corresponding channel attribute; a bit value of 0 shall encode the absence of the corresponding channel attribute.

**Table 5 — Format of a channel description preamble**

| Channel attribute | Bit position |
|---|---|
| Scaling value | 8 (MSB) |
| Minimum possible channel value | 7 |
| Maximum possible channel value | 6 |
| Mean value of the channel values | 5 |
| Standard deviation of the channel values | 4 |
| Constant value | 3 |
| Linear component removed | 2 |
| RFU (reserved for future use) | 1 (LSB) |

© ISO/IEC 2007 – All rights reserved

Copyright International Organization for Standardization
Provided by IHS under license with ISO
No reproduction or networking permitted without license from IHS
Not for Resale

A value of 1 for bit 3 of a channel description preamble shall indicate that the value of this channel is constant. If bit 3 of a channel description preamble is set to 1, then this channel shall be absent in the BDB body even though the BDB header indicates the presence of the channel. If the channel description contains a scaling value, then the constant value of this channel shall be 1 divided by the scaling value.

NOTE Bit 3 of the DT channel description preamble can be used to indicate uniform sampling.

A value of 1 for bit 2 of a channel description preamble shall indicate that the linear component of the regression line for this channel has been removed from this channel.

The unused trailing bit of the preamble shall have value 0 and is reserved for future use.

If any of the bits 4 through 8 of a channel description preamble are set to 1, the preamble shall be followed by a sequence of channel attributes in the same order as indicated in the preamble starting with the scaling value.

#### 7.3.4.3 Scaling value

If present, scaling values shall consist of 2 octets. The 5 most significant bits of the first octet shall constitute the exponent field *E*, and the remaining 11 bits shall constitute the fraction field *F*.

The exponent field *E* contains an unsigned integer representing the base 2 exponent of the scaling value biased by 16. For the exponent, signed integer values in the range from –16 to 15 are allowed. For encoding the exponent value, 16 is to be added in order to get an unsigned value. For decoding the exponent value, 16 is to be subtracted from the contents of *E*.

The fraction field *F* contains the bit field that lies, in binary notation, to the right of the binary point of the mantissa of the scaling value. The mantissa shall be scaled to the range $1 \leq \text{mantissa} < 2$.

The scaling value is calculated by

$$\text{scaling value} = \text{mantissa} \cdot 2^{\text{exponent}} \text{ with } \text{mantissa} = 1 + F / 2^{11} \text{ and } \text{exponent} = E - 16 .$$

The scaling value has a range from $2^{-16}$ to $(1 + 2047/2048) \cdot 2^{15}$, i.e. from 0,000 015 258 789 062 5 to 65 520.

The channel values in the BDB body as well as the minimum, maximum, and mean channel values and the standard deviation in the BDB header are to be divided by the corresponding scaling value to obtain their actual values.

If the scaling value is absent, the calibration of the corresponding channel is unknown.

#### 7.3.4.4 Minimum and maximum possible channel values

If present, the minimum and maximum possible channel values shall indicate the scaled range of values that the deployed capture device may deliver for the corresponding channel.

For the minimum and maximum possible channel values of the Z, T, DT, F, Az, El, and R channels, integer values in the range from 0 to 65 535 are allowed. These values shall be encoded in 2 octets as unsigned integers.

For the minimum and maximum possible channel values of the X, Y, VX, VY, AX, AY, TX, and TY channels, integer values in the range from –32 768 to 32 767 are allowed. These values shall be encoded in 2 octets as unsigned integers after adding 32 768 to each value. Hence, for non-negative numbers, bit 8 of the most significant octet has the value 1; for negative numbers, bit 8 of the most significant octet has the value 0. For decoding these values, 32 768 is to be subtracted from each recorded value.


© ISO/IEC 2007 – All rights reserved
Copyright International Organization for Standardization
Provided by IHS under license with ISO
No reproduction or networking permitted without license from IHS
Not for Resale

#### 7.3.4.5 Mean value and standard deviation of the channel values

If present, the mean value of the channel values shall be the arithmetic mean, rounded to the nearest integer, of all values for the corresponding channel within a signature/sign time series data block:

$$\text{mean} = \frac{1}{N}\sum_{i=1}^{N}\text{value}_i \text{ , where } N \text{ is the number of sample points}$$

If present, the standard deviation of the channel values shall be the standard deviation, rounded to the nearest integer, of all values for the corresponding channel within a signature/sign time series data block:

$$\text{standard deviation} = \sqrt{\frac{1}{N}\sum_{i=1}^{N}(\text{value}_i - \text{mean})^2}$$

For the mean values of the Z, T, DT, F, Az, El, and R channels as well as for the standard deviations of all channels, integer values in the range from 0 to 65 535 are allowed. These values shall be encoded in 2 octets as unsigned integers.

For the mean values of the X, Y, VX, VY, AX, AY, TX, and TY channels, integer values in the range from -32 768 to 32 767 are allowed. These values shall be encoded in 2 octets as unsigned integers after adding 32 768 to each value. Hence, for non-negative numbers, bit 8 of the most significant octet has the value 1; for negative numbers, bit 8 of the most significant octet has the value 0. For decoding these values, 32 768 is to be subtracted from each recorded value.

NOTE The mean values and the standard deviation values provide information as to whether and to which range the signature/sign data has been transformed for facilitating matching.

EXAMPLE The mean values of the X and Y channels provide information as to whether the signature/sign data has been translated/rotated for facilitating matching. If present, the standard deviation values of the X and Y channels provide information about the range to which the signature/sign data has been normalized/scaled for facilitating matching.

### 7.3.5 Reserved octet

A single octet shall be reserved for future revisions of this specification. For Version 1.0 of this part of ISO/IEC 19794, this octet shall be set to $00_{Hex}$.

## 7.4 BDB body

### 7.4.1 General

The BDB body consists of

— sequences of channel values at a sequence of sample points, followed by

— optional extended data.

The BDB body shall begin with a preamble indicating the presence or absence of the optional extended data. The preamble shall consist of 1 octet. A value of 1 in bit 8 (MSB) of the preamble shall encode the presence of the extended data; a value of 0 in bit 8 (MSB) of the preamble shall encode the absence of the extended data. The trailing bits of the preamble shall have the value 0.

The BDB body preamble shall be followed by a sequence of sample points (see 7.4.2) and, as indicated in the preamble, optional extended data (see 7.4.3).

© ISO/IEC 2007 – All rights reserved

Copyright International Organization for Standardization
Provided by IHS under license with ISO
No reproduction or networking permitted without license from IHS
Not for Resale

### 7.4.2 Sequence of sample points

The sequence of sample points shall begin with a length field. The length field indicates the number of sample points. The length field shall consist of 3 octets, representing the number of sample points as an unsigned integer.

The length field shall be followed by a sequence of fields for subsequent sample points. For each sample point, the field shall begin with a value for the mandatory X channel, followed by a value for the mandatory Y channel and a sequence of optional channel values as indicated by the channel inclusion field in the BDB header. The order of the channel values is determined by the order of indicated inclusion within the channel inclusion field (Table 4).

For the Z, T, DT, F, Az, El, and R channels, integer values in the range from 0 to 65 535 are allowed. These values shall be encoded in 2 octets as unsigned integers.

For the X, Y, VX, VY, AX, AY, TX, and TY channels, integer values in the range from –32 768 to 32 767 are allowed. These values shall be encoded in 2 octets as unsigned integers, after adding 32 768 to each value. Hence, for non-negative numbers, bit 8 of the most significant octet has the value 1; for negative numbers, bit 8 of the most significant octet has the value 0. For decoding these values, 32 768 is to be subtracted from each recorded value.

For the S channel, integer values in the range from 0 to 1 are allowed. These values shall be encoded in one octet as unsigned integers.

### 7.4.3 Extended data

The optional extended data field of the signature/sign time series data block allows for inclusion of additional data that may be used by a matching algorithm. The extended data field shall begin with a length field. The length field shall indicate the number of contents octets in the extended data field. The length field shall consist of 2 octets, representing the number of subsequent contents octets as an unsigned integer. The structure of the extended data field is not prescribed by this part of ISO/IEC 19794.

Matching algorithms claiming to use data blocks conforming to the full format defined in this part of ISO/IEC 19794 should be capable of achieving equivalent biometric performance in terms of error rates when processing data blocks without extended data and when processing data blocks with extended data. If extended data is present and the matching algorithm does not require it, the algorithm shall ignore it.

# 8 Compact format

## 8.1 Introduction

The compact format of signature/sign time series data is more compact than the full format defined in clause 7. A signature/sign time series data block in compact format does not contain a header and encodes each channel value within one octet only. Information about the structure and contents of the data block, which otherwise would be given in the channel descriptions within the header, is contained in a matching algorithm parameters data object as defined in 8.2.

The following are examples of where the compact format may be used:

— in the case of off-card matching, within a Biometric Information Template (BIT) as specified in ISO/IEC 7816-11; or

— in the case of on-card matching, in the command data field of VERIFY commands as specified in ISO/IEC 7816-4.


© ISO/IEC 2007 – All rights reserved
Copyright International Organization for Standardization
Provided by IHS under license with ISO
No reproduction or networking permitted without license from IHS
Not for Resale

Figure 5 depicts the body of a signature/sign time series data block in compact format. The solid boxes indicate fields that must be present. The dashed boxes indicate optional fields. The length of each field in bytes is indicated in parentheses at the bottom of the corresponding box. The ellipses indicate that more fields of the same format may follow.

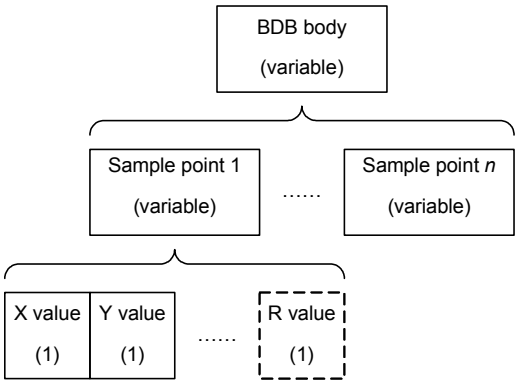


**Figure 5 — Signature/sign time series data block in compact format**

## 8.2 Matching algorithm parameters template

### 8.2.1 General

If present, the matching algorithm parameters data object is embedded in a Biometric Header Template (BHT), which is again embedded in a Biometric Information Template (BIT) as defined in the specification of the TLV-encoded CBEFF patron format for use with smart cards or other tokens in ISO/IEC 19785-3.

The structure of a matching algorithm parameters data object is shown in Table 6. Its tag is $B1_{Hex}$. Its length shall be encoded following the Distinguished Encoding Rules of ASN.1 defined in ISO/IEC 8825-1. Its contents may be a sequence of channel descriptions as defined in 0 and the maximum number of sample points that the comparison algorithm is able to process as defined in 8.2.3.

**Table 6 — Structure of a matching algorithm parameters data object for signature/sign time series data**

| **Tag** | **Length** | **Value** | | | **Presence** |
|---|---|---|---|---|---|
| $B1_{Hex}$ | variable | | | | |
| | | **Tag** | **Length** | **Value** | |
| | | $81_{Hex}$ | variable | Sequence of channel descriptions as defined in 8.2.2 | optional |
| | | $82_{Hex}$ | variable | Maximum number of sample points as defined in 8.2.3 | optional |

### 8.2.2 Channel descriptions

#### 8.2.2.1 Channel inclusion field

If present, the sequence of channel descriptions shall begin with a channel inclusion field as defined in 7.3.4.1.

--`,,```,,,,````-`-`,,`,,`,`,,`---
© ISO/IEC 2007 – All rights reserved
Copyright International Organization for Standardization
Provided by IHS under license with ISO
No reproduction or networking permitted without license from IHS
Not for Resale

#### 8.2.2.2 Channel description preamble

The channel inclusion field shall be followed by a sequence of channel descriptions for the channels indicated as present in the channel inclusion field. The order of the channel descriptions is determined by the order of indicated inclusion within the channel inclusion field (Table 4) starting with the X channel. The channel descriptions are mandatory for all channels present in the signature/sign time series data block.

Each channel description shall begin with a preamble as defined in 0.

If any of the bits 4 through 8 of a channel description preamble are set to 1, the preamble shall be followed by a sequence of channel attributes in the same order as indicated in the preamble starting with the scaling value.

#### 8.2.2.3 Scaling value

If present, the meaning and encoding of the scaling values shall be as defined in 7.3.4.3.

#### 8.2.2.4 Minimum and maximum possible channel values

If present, the meaning of the minimum and maximum possible channel values shall be as defined in 7.3.4.4.

For the minimum and maximum possible channel values of the Z, T, DT, F, Az, El, and R channels, integer values in the range from 0 to 255 are allowed. These values shall be encoded in 1 octet as unsigned integers.

For the minimum and maximum possible channel values of the X, Y, VX, VY, AX, AY, TX, and TY channels, integer values in the range from –128 to 127 are allowed. These values shall be encoded in 1 octet as unsigned integers after adding 128 to each value. Hence, for non-negative numbers, bit 8 of the most significant octet has the value 1; for negative numbers, bit 8 of the most significant octet has the value 0. For decoding these values, 128 is to be subtracted from each recorded value.

#### 8.2.2.5 Mean value and standard deviation of the channel values

If present, the meaning of the mean value and of the standard deviation of the channel values shall be as defined in 7.3.4.5.

For the mean values of the Z, T, DT, F, Az, El, and R channels as well as for the standard deviations of all channels, integer values in the range from 0 to 255 are allowed. These values shall be encoded in 1 octet as unsigned integers.

For the mean values of the X, Y, VX, VY, AX, AY, TX, and TY channels, integer values in the range from –128 to 127 are allowed. These values shall be encoded in 1 octet as unsigned integers after adding 128 to each value. Hence, for non-negative numbers, bit 8 of the most significant octet has the value 1; for negative numbers, bit 8 of the most significant octet has the value 0. For decoding these values, 128 is to be subtracted from each recorded value.

### 8.2.3 Maximum number of sample points

If there is an upper limit to the number of sample points, the maximum number of sample points that the comparison algorithm is able to process may be indicated in the matching algorithm parameters data object. If present, the maximum number of sample points shall be encoded as an unsigned integer.

## 8.3 Embedment in a CBEFF data structure

According to the TLV-encoded patron format for use with smartcards or other tokens defined in ISO/IEC 19785-3, a signature/sign time series data block is encoded as shown in Table 7 or Table 8, depending on whether the signature/sign time series data block contains extended data or not. Its tag is $5f2e_{Hex}$ if there is no extended data, and $7f2e_{Hex}$ if there is also extended data. Its length is encoded following the Distinguished Encoding Rules of ASN.1 defined in ISO/IEC 8825-1. Its contents shall be the body of a signature/sign time series data block as defined in 0.


© ISO/IEC 2007 – All rights reserved
Copyright International Organization for Standardization
Provided by IHS under license with ISO
No reproduction or networking permitted without license from IHS
Not for Resale

**Table 7 — Signature/sign time series data block without extended data**

| Tag | Length | Value |
|---|---|---|
| $5f2e_{Hex}$ | variable | Body of a signature/sign time series data block as defined in 8.4 |

**Table 8 — Signature/sign time series data block alongside extended data**

| Tag | Length | Value | | |
|---|---|---|---|---|
| $7f2e_{Hex}$ | variable | | | |
| | | **Tag** | **Length** | **Value** |
| | | $81_{Hex}$ | variable | Body of a signature/sign time series data block as defined in 0 |
| | | $82_{Hex}$ or $A2_{Hex}$ | variable | Extended data in proprietary format (of primitive or constructed type) |

## 8.4 BDB body

The body of a signature/sign time series data block consists of a sequence of fields, each of which consists of a sequence of channel values at a particular sample point, for subsequent sample points. For each sample point, the field shall begin with a value for the mandatory X channel, followed by a value for the mandatory Y channel, and a sequence of optional channel values as indicated by the channel inclusion field in the matching algorithm parameters data object. The order of the channel values is determined by the order of indicated inclusion within the channel inclusion field (Table 4).

For the Z, T, F, Az, El, and R channels, integer values in the range from 0 to 255 are allowed. These values shall be encoded in 1 octet as unsigned integers. In the compact format, the T channel shall contain time data relative to the preceding sample.

For the X, Y, VX, VY, AX, AY, TX, and TY channels, integer values in the range from –128 to 127 are allowed. These values shall be encoded in 1 octet as unsigned integers after adding 128 to each value. Hence, for non-negative numbers, bit 8 has the value 1; for negative numbers, bit 8 has the value 0. For decoding these values, 128 is to be subtracted from each recorded value.

For the S channel, integer values in the range from 0 to 1 are allowed. These values shall be encoded in one octet as unsigned integers.

© ISO/IEC 2007 – All rights reserved

Copyright International Organization for Standardization
Provided by IHS under license with ISO
No reproduction or networking permitted without license from IHS
Not for Resale

# Annex A
(informative)

# Best practices — Data acquisition

## A.1 Introduction

The recommendations made in this Annex are included to provide minimum standards to ensure acceptable levels of performace.

## A.2 Minimum X resolution and variation

The minimum value should be 40 dots per centimetre. The resolution should not vary by more than 5% from the mean value across any chosen horizontal centimetre. The X resolution should not depend on velocity and pen tilt up to a predefined maximum velocity and tilt.

## A.3 Minimum Y resolution and variation

The minimum value should be 40 dots per centimetre. The resolution should not vary by more than 5% from the mean value across any chosen vertical centimetre. The Y resolution should not depend on velocity and pen tilt up to a predefined maximum velocity and tilt.

## A.4 Minimum sample frequency and variation

The minimum value should be 50 samples per second. There should be no sequential sample points with F > 0 separated by more than 20 milliseconds.

## A.5 X jitter

For any chosen point, the X jitter should be less than 0,2% of the range of possible X values.

## A.6 Y jitter

For any chosen point, the Y jitter should be less than 0,2% of the range of possible Y values.

## A.7 Force

Inclusion of the F channel is recommended.

Where force measurements are returned the values should be within 10% of the equivalent millinewtons determined at calibration.

## A.8 Pen angle

Where pen angle data are returned the values should be within 10% of the measured pen angle in both azimuth and elevation.


© ISO/IEC 2007 – All rights reserved
Copyright International Organization for Standardization
Provided by IHS under license with ISO
No reproduction or networking permitted without license from IHS
Not for Resale

# Annex B
(informative)

# ASN.1 specification of the data interchange formats

## B.1 Abstract syntax of the signature/sign time series data encodings

The normative body of this part of ISO/IEC 19794 specifies the complete bit-level representations of the signature/sign time series data full format and compact format that are suitable for transfer or storage. This is called the signature/sign time series data standard encoding. It can, however, be useful to define the form of the full and compact formats independently of the bit-level representation (their abstract syntax). This enables

a) different encodings to be used (for example, an XML encoding) where appropriate;

b) different in-core representations to be used, using structures suited for easy processing with the C, C++ or Java programming languages;

c) a wider range of tools to be used in the implementation of these formats;

d) easier in-core representation on machines that do not have a big-endian hardware architecture; and

e) a more easily understood description of the values in the formats.

The abstract syntax is specified in this Annex using ASN.1. The signature/sign time series data standard encodings are obtained by application of the ASN.1 Basic Packed Encoding Rules (BASIC-PER), unaligned variant, to the ASN.1 modules given in B.2 and B.3, including additional PER Encoding Instructions. The resulting encodings are exactly the same as those specified in the body of this part of ISO/IEC 19794.

Using the abstract syntax as the schema, tools can convert between any encoding of the values and in-core representations on any hardware architecture and for any programming language. Tools that convert these specifications to programming language data structures are called ASN.1 compilers, and are supported by run-time routines that will convert between an in-core value and any desired (specified) encoding. These tools are supported by multiple vendors. In particular, tools that convert between the signature/sign time series data standard encoding and in-core representations of the values are available for most hardware architectures and most programming languages.

## B.2 Signature/sign time series data full format

```
SignatureSignFullFormatModule
{iso standard 19794 signature-sign(7) modules(0) record-format(0) version(0)}
DEFINITIONS
PER INSTRUCTIONS
-- This specifies that PER Encoding Instructions are to be applied
AUTOMATIC TAGS ::=
BEGIN
    SignatureSignBlock ::= SEQUENCE {
        header Header,
        body   Body
    }
```

© ISO/IEC 2007 – All rights reserved

Copyright International Organization for Standardization
Provided by IHS under license with ISO
No reproduction or networking permitted without license from IHS
Not for Resale

```
Header ::= SEQUENCE {
    formatId            [NULL] IA5String ("SDI"),
    standardVersion     [NULL] IA5String (SIZE (3)),
        -- " 10" (space-one-zero) for this version
    channelInclusions   ChannelInclusions,
    channelDescriptions ChannelDescriptions
}
ChannelInclusions ::= SEQUENCE {
    x-included  BOOLEAN,
    y-included  BOOLEAN,
    z-included  BOOLEAN,
    vX-included BOOLEAN,
    vY-included BOOLEAN,
    aX-included BOOLEAN,
    aY-included BOOLEAN,
    t-included  BOOLEAN,
    dt-included BOOLEAN,
    f-included  BOOLEAN,
    s-included  BOOLEAN,
    tX-included BOOLEAN,
    tY-included BOOLEAN,
    az-included BOOLEAN,
    el-included BOOLEAN,
    r-included  BOOLEAN
} (WITH COMPONENTS {x-included (TRUE), y-included (TRUE)})

ChannelDescriptions ::= [OPTIONALITY-IN Header.channelInclusions] SEQUENCE {
    -- The optionality bit-map is taken from the channel inclusions.
    -- The channelInclusions structure is needed because the same bit-map controls
    -- the optionality in each SamplePoint SEQUENCE in the SamplePoints SEQUENCE OF.
    x  SignedChannelDescr   OPTIONAL,
    y  SignedChannelDescr   OPTIONAL,
    z  UnsignedChannelDescr OPTIONAL,
    vX SignedChannelDescr   OPTIONAL,
    vY SignedChannelDescr   OPTIONAL,
    aX SignedChannelDescr   OPTIONAL,
    aY SignedChannelDescr   OPTIONAL,
    t  UnsignedChannelDescr OPTIONAL,
    dt UnsignedChannelDescr OPTIONAL,
    f  UnsignedChannelDescr OPTIONAL,
    s  UnsignedChannelDescr OPTIONAL,
    tX SignedChannelDescr   OPTIONAL,
    tY SignedChannelDescr   OPTIONAL,
    az UnsignedChannelDescr OPTIONAL,
    el UnsignedChannelDescr OPTIONAL,
    r  UnsignedChannelDescr OPTIONAL
}

SignedChannelDescr ::= SEQUENCE {
    preamble          Preamble,
    channelAttributes SignedChannelAttributes
}

UnsignedChannelDescr ::= SEQUENCE {
    preamble          Preamble,
    channelAttributes UnsignedChannelAttributes
}
```


© ISO/IEC 2007 – All rights reserved
Copyright International Organization for Standardization
Provided by IHS under license with ISO
No reproduction or networking permitted without license from IHS
Not for Resale

```
Preamble ::= SEQUENCE {
    scalingValue-included BOOLEAN,
    min-included          BOOLEAN,
    max-included          BOOLEAN,
    mean-included         BOOLEAN,
    std-included          BOOLEAN,
    is-constant           BOOLEAN,
    linearComp-removed    BOOLEAN,
    reserved              BOOLEAN
}

SignedChannelAttributes ::= [OPTIONALITY-IN SignedChannelDescr.preamble] SEQUENCE {
    -- The optionality bit-map is taken from the channel description preamble.
    scalingValue ScalingValue  OPTIONAL,
    min          SignedInt16   OPTIONAL,
    max          SignedInt16   OPTIONAL,
    mean         SignedInt16   OPTIONAL,
    std          UnsignedInt16 OPTIONAL
}

UnsignedChannelAttributes ::= [OPTIONALITY-IN UnsignedChannelDescr.preamble] SEQUENCE
{   -- The optionality bit-map is taken from the channel description preamble.
    scalingValue ScalingValue  OPTIONAL,
    min          UnsignedInt16 OPTIONAL,
    max          UnsignedInt16 OPTIONAL,
    mean         UnsignedInt16 OPTIONAL,
    std          UnsignedInt16 OPTIONAL
}

ScalingValue ::= SEQUENCE {
    exponent INTEGER (-16..15),
    fraction INTEGER (0..2047)
}

Body ::= [SIZE 8] SEQUENCE {
    -- 8 bit optionality bit-map, with only one bit used.  Other bits will be set to
    -- zero by encoders, ignored by decoders.
    samplePoints [LENGTH 3][COUNT-OCTETS] SEQUENCE SIZE (0..16777215) OF SamplePoint,
        -- Prevents optimisation for short length, forcing 3 octets in all cases
    extendedData [LENGTH 2][COUNT-OCTETS] OCTET STRING OPTIONAL
        -- Prevents optimisation for short length, forcing 2 octets in all cases
}

SamplePoint ::= [OPTIONALITY-IN Header.channelInclusions] SEQUENCE {
    -- As above
    x  SignedInt16   OPTIONAL,
    y  SignedInt16   OPTIONAL,
    z  UnsignedInt16 OPTIONAL,
    vX SignedInt16   OPTIONAL,
    vY SignedInt16   OPTIONAL,
    aX SignedInt16   OPTIONAL,
    aY SignedInt16   OPTIONAL,
    t  UnsignedInt16 OPTIONAL,
    dt UnsignedInt16 OPTIONAL,
    f  UnsignedInt16 OPTIONAL,
    s  UnsignedInt8  OPTIONAL,
    tX SignedInt16   OPTIONAL,
    tY SignedInt16   OPTIONAL,
    az UnsignedInt16 OPTIONAL,
    el UnsignedInt16 OPTIONAL,
```

© ISO/IEC 2007 – All rights reserved

Copyright International Organization for Standardization
Provided by IHS under license with ISO
No reproduction or networking permitted without license from IHS
Not for Resale

```
        r  UnsignedInt16 OPTIONAL
    }

    UnsignedInt16 ::= INTEGER (0..65535)
    SignedInt16   ::= INTEGER (-32768..32767)
    UnsignedInt8  ::= INTEGER (0..255)
END
```

## B.3 Signature/sign time series data compact format

```
SignatureSignCompactFormatModule
{iso standard 19794 signature-sign(7) modules(0) compact-format(1) version(0)}
DEFINITIONS
AUTOMATIC TAGS ::=
BEGIN
    CompactSignatureSignBlock ::= SEQUENCE OF SamplePoint

    SamplePoint ::= SEQUENCE {
        x    SignedInt8    OPTIONAL,
        y    SignedInt8    OPTIONAL,
        z    UnsignedInt8  OPTIONAL,
        vX   SignedInt8    OPTIONAL,
        vY   SignedInt8    OPTIONAL,
        aX   SignedInt8    OPTIONAL,
        aY   SignedInt8    OPTIONAL,
        t    UnsignedInt8  OPTIONAL,
        dt   UnsignedInt8  OPTIONAL,
        f    UnsignedInt8  OPTIONAL,
        s    UnsignedInt8  OPTIONAL,
        tX   SignedInt8    OPTIONAL,
        tY   SignedInt8    OPTIONAL,
        az   UnsignedInt8  OPTIONAL,
        el   UnsignedInt8  OPTIONAL,
        r    UnsignedInt8  OPTIONAL
    }

    SignedInt8 ::=   INTEGER (-128..127)

    UnsignedInt8 ::= INTEGER (0..255)
END
```


© ISO/IEC 2007 – All rights reserved
Copyright International Organization for Standardization
Provided by IHS under license with ISO
No reproduction or networking permitted without license from IHS
Not for Resale

# Annex C
(informative)

# Signature/sign coding examples

## C.1 Signature/sign time series data full format

```
            -- Header
53 44 49 00 -- Signature/sign time series data record format ID: "SDI"
20 31 30 00 -- Standard version number: " 10"
C0 C0       -- X, Y, F, and DT channels included
80          -- X scaling value included
F9 98       -- X scaling value (mantissa: 1.000110011b, base 2 exponent: 15;
            -- that means 39296 dots per m; the original scaling value of
            -- 393 dots per cm cannot be expressed exactly)
80          -- Y scaling value included
F9 98       -- Y scaling value (mantissa: 1.00110011b, base 2 exponent: 15)
60          -- F minimum and maximum values included
00 00       -- F minimum value: 0
03 00       -- F maximum value: 768
84          -- DT scaling value included, uniform sampling used
B4 80       -- DT scaling value (mantissa: 1.1001b, base 2 exponent: 6;
            -- that means uniform sampling with 100 samples/s is used)
00          -- Reserved octet

            -- Body
00          -- No optional extended data included
00 01 DB    -- Length of sequence of sample points: 475 sample points
            -- Sample point 1
82 07       -- X value:  519 = 1.32 cm
8B CB       -- Y value: 3019 = 7.68 cm
00 3F       -- F value:   63
            -- Sample point 2
82 09       -- X value:  521 = 1.33 cm
8B CB       -- Y value: 3019 = 7.68 cm
01 35       -- F value:  309
            -- Sample point 3
82 0F       -- X value:  527 = 1.34 cm
8B E8       -- Y value: 3048 = 7.76 cm
01 3C       -- F value:  316

            -- and so on for 472 more sample points ...
```

--`,,```,,,,````-`-`,,`,,`,`,,`---
© ISO/IEC 2007 – All rights reserved
Copyright International Organization for Standardization
Provided by IHS under license with ISO
No reproduction or networking permitted without license from IHS
Not for Resale

## C.2 Signature/sign time series data compact format

### C.2.1 Matching algorithm parameters data object

```
B1          -- Tag of matching algorithm parameters data object
09          -- Length of matching algorithm parameters data object: 9 octets
81          -- Tag of channel descriptions
07          -- Length of channel descriptions: 7 octets
C0 80       -- X, Y, and DT channels included
00          -- X channel no further information given
00          -- Y channel no further information given
84          -- DT scaling value included, uniform sampling used
B4 80       -- DT scaling value (mantissa: 1.1001b, base 2 exponent: 6;
            -- that means uniform sampling with 100 samples/s is used)
```

### C.2.2 Signature/sign time series data block

```
5F 2E       -- Tag of signature/sign time series data block without extended data
82          -- 2 length octets follow
03 B6       -- Length of signature/sign time series data block: 950 octets
            -- (475 sample points, 2 octets for each)

            -- Body of signature/sign time series data block
AC F2       -- Sample point 1: X = 44, Y = 114
A9 F2       -- Sample point 2: X = 41, Y = 114

            -- and so on for 473 more sample points
```


© ISO/IEC 2007 – All rights reserved
Copyright International Organization for Standardization
Provided by IHS under license with ISO
No reproduction or networking permitted without license from IHS
Not for Resale

# Bibliography

[1] ISO/IEC 7816-4, *Identification cards — Integrated circuit cards — Part 4: Organization, security and commands for interchange*

[2] ISO/IEC 7816-11, *Identification cards — Integrated circuit cards — Part 11: Personal verification through biometric methods*

[3] ISO/IEC 8825-1, *Information technology — ASN.1 encoding rules: Specification of Basic Encoding Rules (BER), Canonical Encoding Rules (CER) and Distinguished Encoding Rules (DER)*

© ISO/IEC 2007 – All rights reserved

Copyright International Organization for Standardization
Provided by IHS under license with ISO
No reproduction or networking permitted without license from IHS
Not for Resale

**ICS 35.040**

Price based on 23 pages

--`,,```,,,,````-`-`,,`,,`,`,,`---

© ISO/IEC 2007 – All rights reserved

Copyright International Organization for Standardization
Provided by IHS under license with ISO
No reproduction or networking permitted without license from IHS

Not for Resale