INTERNATIONAL STANDARD

ISO/IEC 19752

First edition
2004-06-15

Information technology — Method for the determination of toner cartridge yield for monochromatic electrophotographic printers and multi-function devices that may contain printer components

Technologies de l'information — Méthode pour la détermination du rendement des cartouches de toner pour les imprimantes électrophotographiques monochromatiques et pour les dispositifs multifonctionnels qui pourront contenir des composants d'imprimantes

Reference number
ISO/IEC 19752:2004(E)

© ISO/IEC 2004

Copyright International Organization for Standardization
Reproduced by IHS under license with ISO
No reproduction or networking permitted without license from IHS

Not for Resale

PDF disclaimer

This PDF file may contain embedded typefaces. In accordance with Adobe's licensing policy, this file may be printed or viewed but shall not be edited unless the typefaces which are embedded are licensed to and installed on the computer performing the editing. In downloading this file, parties accept therein the responsibility of not infringing Adobe's licensing policy. The ISO Central Secretariat accepts no liability in this area.

Adobe is a trademark of Adobe Systems Incorporated.

Details of the software products used to create this PDF file can be found in the General Info relative to the file; the PDF-creation parameters were optimized for printing. Every care has been taken to ensure that the file is suitable for use by ISO member bodies. In the unlikely event that a problem relating to it is found, please inform the Central Secretariat at the address given below.

© ISO/IEC 2004

All rights reserved. Unless otherwise specified, no part of this publication may be reproduced or utilized in any form or by any means, electronic or mechanical, including photocopying and microfilm, without permission in writing from either ISO at the address below or ISO's member body in the country of the requester.

ISO copyright office
Case postale 56 • CH-1211 Geneva 20
Tel. + 41 22 749 01 11
Fax + 41 22 749 09 47
E-mail copyright@iso.org
Web www.iso.org

Published in Switzerland

Copyright International Organization for Standardization
Reproduced by IHS under license with ISO
No reproduction or networking permitted without license from IHS
Not for Resale

© ISO/IEC 2004 – All rights reserved

Contents

Page

Foreword ... iv

Introduction ... v

1 Scope ... 1

2 Terms and definitions ... 1

3 Test Parameters and Conditions ... 2
3.1 Set-up ... 2
3.2 Sample Size ... 3
3.3 Print Mode ... 3
3.4 Print Environment ... 3
3.5 Paper ... 4
3.6 Maintenance ... 4
3.7 Print File ... 4

4 Test Methodology ... 5
4.1 Testing Procedure ... 5
4.2 Procedure for handling a defective cartridge or printer ... 5
4.2.1 Defective Cartridge ... 5
4.2.2 Defective Printer ... 5

5 Determination of the declared yield value and declaration ... 6
5.1 Determination of the declared yield value ... 6
5.2 Test data reporting ... 6
5.3 Declaration of the yield ... 6

Annex A (informative) **Examples of Fade** ... 7

Annex B (informative) **Process Flowchart and Examples** ... 8

Annex C (normative) **Standard test page** ... 11

Annex D (informative) **Sample reporting form** ... 16

Annex E (informative) **Comparison of Yield for Two Printing Systems** ... 18

© ISO/IEC 2004 All rights reserved

Copyright International Organization for Standardization
Reproduced by IHS under license with ISO
No reproduction or networking permitted without license from IHS
Not for Resale

Foreword

ISO (the International Organization for Standardization) and IEC (the International Electrotechnical Commission) form the specialized system for worldwide standardization. National bodies that are members of ISO or IEC participate in the development of International Standards through technical committees established by the respective organization to deal with particular fields of technical activity. ISO and IEC technical committees collaborate in fields of mutual interest. Other international organizations, governmental and non-governmental, in liaison with ISO and IEC, also take part in the work. In the field of information technology, ISO and IEC have established a joint technical committee, ISO/IEC JTC 1.

International Standards are drafted in accordance with the rules given in the ISO/IEC Directives, Part 2.

The main task of the joint technical committee is to prepare International Standards. Draft International Standards adopted by the joint technical committee are circulated to national bodies for voting. Publication as an International Standard requires approval by at least 75 % of the national bodies casting a vote.

Attention is drawn to the possibility that some of the elements of this document may be the subject of patent rights. ISO and IEC shall not be held responsible for identifying any or all such patent rights.

ISO/IEC 19752 was prepared by Joint Technical Committee ISO/IEC JTC 1, *Information technology*, Subcommittee SC 28, *Office equipment.*

© ISO/IEC 2004 – All rights reserved
Copyright International Organization for Standardization
Reproduced by IHS under license with ISO
No reproduction or networking permitted without license from IHS
Not for Resale

Introduction

The purpose of this International Standard is to provide a process for determining the page yield for toner cartridges for monochromatic printers using a standard office consumer type test page.

This standard prescribes the following:

- The test method that manufacturers should use to determine cartridge yield.
- The method for determination of declared yield values from the test results.
- The appropriate method of describing the yield of cartridges in documentation supplied to the consumer by the manufacturer.

The end of life is judged with either of two phenomena - “image fade” caused by toner depletion of the cartridge in the printing system or "automatic printing stop" by the Toner Out detection function.

--`,,`,,`-`-`,,`,,`,`,,`---

© ISO/IEC 2004 All rights reserved

Copyright International Organization for Standardization
Reproduced by IHS under license with ISO
No reproduction or networking permitted without license from IHS
Not for Resale

--`,,`,,`-`-`,,`,,`,`,,`---

Copyright International Organization for Standardization
Reproduced by IHS under license with ISO
No reproduction or networking permitted without license from IHS

Not for Resale

Information technology — Method for the determination of toner cartridge yield for monochromatic electrophotographic printers and multi-function devices that may contain printer components

1 Scope

The scope of this International Standard is limited to evaluation of toner cartridge yield for toner containing cartridges (i.e. all-in-one toner cartridges and toner cartridges without a photoconductor) for monochrome electrophotographic printers. This International Standard could also be applied to the printer component of any multifunctional device that has a digital input-printing path (i.e. multi-function devices that contain printer components).

This International Standard is only intended for the measurement of toner cartridge yield. No other claims can be made from this testing regarding quality, reliability, etc.

NOTE Application of this International Standard for yield measurement of toner replenishment systems (i.e. toner cartridge- and bottle type systems where the toner reservoir is internal to the printing system and not user-replaceable) requires some procedural modifications specifically noted herein. This International Standard is intended for equipment used in the office space and does not apply to production volume or large format printing machines where the major cost of ownership is not caused by the consumable yield measured in this International Standard.

2 Terms and definitions

For the purposes of ISO 19752, the following terms and definitions apply.

2.1
Fade
a phenomenon whereby a noticeable reduction in density uniformity across the page occurs

NOTE In this test, fade is defined as a noticeably lighter, 3 mm or greater, gap located in the text or boxes around the periphery of the test page. The determination of the change in lightness is to be made referenced to the 100th page printed for each cartridge in testing. For examples of fade, please consult Annex A.

2.2
Shake Procedure
in the case that the cartridge user's manual instructs cartridge shaking and its method, shaking the cartridge according to the procedures specified

NOTE If a shake procedure is used in testing it will be noted in the report.

2.3
Toner Low
a signal generated by the printer when it has been detected that the amount of toner is such that a toner change will be required soon

NOTE It does not indicate that the system is out of toner.

© ISO/IEC 2004 All rights reserved

Copyright International Organization for Standardization
Reproduced by IHS under license with ISO
No reproduction or networking permitted without license from IHS
Not for Resale

2.4
Toner Out
a signal generated by the printer when the toner in the system is depleted and the printer is incapable of reliable printing without user intervention

NOTE For the purpose of this test, the toner out signal will only be used if it causes the printer to stop printing and requires toner replacement to continue printing.

2.5
End of Life
when the printer declares “Toner Out”

NOTE 1 The general intent of this definition is to allow 2 shake procedures near end of life and to declare end of life at the first fade after the 2 shake procedures. Nominally the shake procedures are to be executed at print fade. However, if the printer is equipped with a Toner Low device, then the first, second or both shake procedures can be executed at Toner Low instead of at fade as a convenience for the tester. If the user’s guide does not specify a shake procedure then the shake procedures are not done and end of life occurs at the first fade.

NOTE 2 When fade occurs before Toner Out and no shake procedure is specified, then end of life is declared at the fade. If a shake procedure is specified for a printer with a Toner Out device, then up to 2 shake procedures can be executed as described in the paragraph above when fade occurs before Toner Out. In this case, if fade occurs after 2 shake procedures but before Toner Out, then end of life is declared at the third fade. If Toner Out occurs at any time during testing, the cartridge is considered to be at end of life.

NOTE 3 When applied to replenishment systems (bulk toner replacement or multi-part toner systems), the intent of this definition is to declare a quasi-end of cartridge life at a regular predetermined point. If the printer is equipped with a Toner Low or Toner Out signal, these can be used as the point of quasi-end of life. In either case, the end of life condition chosen must be noted in the test report.

NOTE 4 When shake procedures have been performed during the test, the test report will note for both the first and second shake procedures whether they were done at Toner Low or at fade. Any faded pages printed during the test are to be excluded from the cartridge page count.

NOTE 5 Application of this definition may be clarified by reference to a flow chart and examples found in Annex B.

2.6
Individual Page Yield
the number of “standard page file” pages printed between cartridge installation and end of life (as defined in Section 3.5)

NOTE For replenishment systems, the individual page yield is determined by counting the number of “standard page file” pages printed between prescribed quasi-end of life conditions (defined in Section 3.5).

2.7
Declared Page Yield
(see Clause 6)

3 Test Parameters and Conditions

3.1 Set-up

Place the printer on a horizontal surface and set-up the printer according to the installation guide provided in the printer user’s manual. Use the most recent printer driver available from the manufacturer. The driver version will be specified on the test report. Cartridge installation shall be completed following the instructions in the cartridge installation guide. If there is a contradiction between the printer and cartridge manuals for the cartridge installation, the cartridge manual will take precedence except if changes are recommended for printer or driver settings.

If the cartridge used in testing is a toner replenishment or toner bottle type, then one complete toner cartridge will be used in each printer before the start of the test. The pages printed to deplete this priming cartridge do

© ISO/IEC 2004 – All rights reserved
Copyright International Organization for Standardization
Reproduced by IHS under license with ISO
No reproduction or networking permitted without license from IHS
Not for Resale

not have to be recorded and printing can be conducted at any environment. This priming cartridge is used to bring the printing system to a set toner level condition.

All image and print quality modifiers should be at their factory pre-set configuration for the printer and default installed condition for the driver. If the printer and driver differ, then the driver defaults should be used. Any user selectable toner conservation modes should be disabled during testing.

If the printer under test uses an internal PDF interpreter, it is ok to use it as long as the printer defaults are set to not substitute fonts. If the internal interpreter is used, this should be noted on the report.

To assure that the test page is rendered correctly, any page size modifiers such as “Fit to Page”, “Page Centring” and font substitution should be turned off. To further insure that font substitution does not occur, fonts should be downloaded as TrueType fonts if the driver provides that option. If the option exists, rendering of graphics should be performed by the printer, not the application software or operating system. The file should be printed using the fonts embedded in the file and should be rendered on the page in a size corresponding to the dimensions in the test page description. Page placement modifies such as page centering can be used to place the image properly on the page. If there is a question about rendering settings affecting the yield, the setting should be noted in the report.

NOTE The application software (i.e. Adobe Reader), printer driver and printer may have page size modifier functions, such as “Fit to Page”. Make sure that all of these functions are disabled.

3.2 Sample Size

A combination of at least three cartridges shall be run on a combination of at least three printers (for a minimum of nine cartridges and three printers). This is the minimum number of engines and cartridges that should be used for testing. When feasible it is recommended that additional engines and cartridges be used in testing. When testing additional engines and cartridges above the minimum, an effort should be made to test equal number of cartridges on each engine. For example, if an additional engine is to be tested then the minimum number of cartridges to be tested would be 12 (3 cartridges X 4 engines). When testing cartridges for a released product, it is recommended that cartridges and printers are procured from various sources, or selected from different production lots. The printers and cartridges must be within their useful life as stated in their user’s manual.

NOTE It is recommended that an additional cartridge be procured to allow for the possibility of cartridge failure during testing.

3.3 Print Mode

For reporting cartridge yield, the test shall be run in continuous print mode simplex printing, with printed output occurring at or near rated printer speed. The actual print speed will be semi-continuous because of printing being interrupted for paper replenishment etc. Every attempt should be made to have printing be continuous from the start of a cartridge to the end of cartridge life.

3.4 Print Environment

The temperature and humidity can have a profound effect on test results. For this reason, the test must be carried out according to the following test conditions:

Temperature: Testing room average 23.0C $\pm$ 2C

Readings to be made with a running average of 1 hour with readings recorded at least every 15 minutes, all running average temperatures are to be between 20.0C and 26.0C.

Relative Humidity: Testing room average 50% $\pm$ 10% RH

Readings to be made with a running average of 1 hour with readings recorded at least every 15 minutes, all running average RHs are to be between 35% and 65%.

© ISO/IEC 2004 All rights reserved

Copyright International Organization for Standardization
Reproduced by IHS under license with ISO
No reproduction or networking permitted without license from IHS
Not for Resale

Example: An example of the calculation of the temperature is shown below for temperature readings taken on 15-minute intervals for the testing of one cartridge.

	t_1	t_2	t_3	t_4	t_5	t_6	t_7	t_8	t_9	t_{10}	t_{11}	t_{12}	
Temperature	24.0	23.4	20.5	24.2	23.6	22.0	25.5	24.7	22.1	20.8	22.0	23.5	Testing Room Average
Running Average	N/A	N/A	N/A	23.0	22.9	22.6	23.8	24.0	23.6	23.3	22.4	22.1	23.0

Running Average at $t_i = (t_{i-3}+t_{i-2}+t_{i-1}+t_i)/4$

Testing Room Average = $(t_1+t_2+ \ldots +t_{12})/12$

From this the testing room average would be 23.0C, the maximum running average reading 24.0C and the minimum running average reading 22.1C. These values can be found highlighted in the table of temperature measurements. It should be noted that the testing room average for both temperature and RH are averages of all measurements, not the running averages.

Prior to testing, the printer, paper and cartridges should be acclimated to the above conditions for a minimum of 8 hours. Before acclimation, packaging and shipping materials should be opened with care taken to prevent any light damage from occurring to the cartridge during acclimation. Paper may be acclimated in the ream wrapper. Before final acclimation, all materials should be temperature acclimated to an office environment.

Any water condensation must be avoided when printer, paper and cartridges are carried in the test environment

3.5 Paper

The paper used in this test should represent a “common” medium weight paper, and must conform to the printer’s list of approved papers. The paper manufacturer, weight and size, A4 or equivalent, used in the test will be noted on the report.

3.6 Maintenance

Printer maintenance shall be performed throughout yield testing per the printer and cartridge user’s manual. (For example, developer roller or fuser replacement)

3.7 Print File

The print test file is outlined and specified in detail in Annex C. The test must be conducted using the most recent official electronic test file as the input. The most recent official file can be located at http://www.iso.org/jtc1/sc28. Failure to use the exact file specifications will invalidate test results. In addition to the PDF test file, the latest version of the printer driver will be used to print the test pages. If the printer under test uses an internal PDF interpreter, it is ok to use it as long as the printer defaults are set to not substitute fonts. If the internal interpreter is used, this should be noted on the report. The version of the test file and version and maker of the PDF reader will be included in the test report. Previous to starting the test a sample file should be printed to check the image and assure the proper size. A measurement should be made between A – B for short edge feeding paper and the dimension be 170.0mm±1%. For long edge feeding paper these measurements should be A – C 250.0mm ±1%.as shown in Annex C. This is done because image stretch can occur in the feeding direction that does not affect the use of toner.

NOTE To aid in counting and tracking pages, a header or footer can be added to the test page. Every attempt should be made by reducing the size of this addition to reduce the effect on calculated yield.

If the given tolerances cannot be met with all scaling modifiers off, then testing cannot continue.

© ISO/IEC 2004 – All rights reserved
Copyright International Organization for Standardization
Reproduced by IHS under license with ISO
No reproduction or networking permitted without license from IHS
Not for Resale

4 Test Methodology

4.1 Testing Procedure

1) Install at least three printers following the user's manual. If the cartridge used in testing is a toner replenishment or toner bottle type, then one complete toner cartridge will be used in each printer before the start of the test. The pages printed to deplete this priming cartridge do not have to be recorded and printing can be conducted at any environment.

2) Install corresponding cartridges following the cartridge installation guide. If there is a contradiction between the printer and cartridge manuals for the cartridge installation, the cartridge manual will take precedence except if changes are recommended for printer or driver settings.

3) Begin test and start tracking the number of pages run on each test cartridge.

4) When the 100th page is printed for the cartridge, save page for use as the fade reference.

5) When end of life is reached on any cartridge, record Individual Page Yield as described in section 3.6.

6) Repeat steps 2 through 5 for remaining toner cartridges.

4.2 Procedure for handling a defective cartridge or printer

During testing, a failure of the cartridge or printer may occur. This will be handled in the following manner. Cartridge failures are defined as occurrences of problems that would result in replacement of the toner cartridge before end of life. Examples of this could be Optical Photo-Conductor (OPC) damage, excessive toner leakage, structural failure, etc. Printer failures are defined as non-user clearable errors that prevent normal printer operation from occurring. An example of this might be the failure of the laser beam on the printer.

4.2.1 Defective Cartridge

In the case of a defective cartridge, the last page printed shall be recorded on the report, and reason for failure. The cartridge will then be replaced with a new cartridge and the testing continued. For the purposes of yield calculation, the defective cartridge will not be used. For the test to be considered valid at least 9 cartridges must be run to end of life as defined in Section 3.5.

4.2.2 Defective Printer

In the case of a defective printer, the printer shall be repaired or replaced and new cartridge shall be used for subsequent testing. On the report, the last page printed by the cartridge will be recorded and it noted that the cartridge was replaced due to printer failure. The failure of the printer will be noted and the replacement printer serial number recorded. For the test to be considered valid at least 9 cartridges must be run to end of life as defined in Section 3.5. If a printer fails during testing, the completed cartridges that have been run on the engine are still valid for calculation. Three additional cartridges do not have to be tested on the new engine.

If the printer used in testing is a toner replenishment or toner bottle type, then one complete toner cartridge will be used in the repaired or replaced printer before continuation of the test. The pages printed to deplete this priming cartridge do not have to be recorded and printing can be conducted at any environment.

© ISO/IEC 2004 All rights reserved

Copyright International Organization for Standardization
Reproduced by IHS under license with ISO
No reproduction or networking permitted without license from IHS
Not for Resale

5 Determination of the declared yield value and declaration

5.1 Determination of the declared yield value

An average and a standard deviation will be obtained from the test runs (e.g. n = 9).

Sample Average, $\overline{\mathrm{X}} = \sum_{i=1}^{n} \frac{x_i}{n}$

Sample Standard Deviation, $s = \sqrt{\sum_{i=1}^{n} \frac{\left(x_i - \overline{X}\right)^2}{(n-1)}}$

It can be stated with 90% confidence that the true average yield of the cartridges is within the following values:

Lower Confidence Bound $= \overline{\mathrm{X}} - \left(t_{\alpha,n-1}\right) * \frac{s}{\sqrt{n}}$

Upper confidence bound $= \overline{\mathrm{X}} + \left(t_{\alpha,n-1}\right) * \frac{s}{\sqrt{n}}$

Where

n Is the sample size. For testing n shall be ≥ 9

$t_{\alpha,n-1}$ Can be found on a Students' t-Distribution Table with n -1 degrees of freedom (df or 'ν') and an α of 0.1. (in this example, n –1 = 9-1 = 8) This provides a 2-tailed confidence interval with 90% confidence. This specific t-statistic for 8 degrees of freedom, and 90% confidence is $t_{\alpha,n-1}$ = 1.860. This can be used in the above calculation, only. A different sample size and/or different confidence interval will yield a different $t_{\alpha,n-1}$.

The declared value shall be determined so that it's at or below the calculated lower 90% confidence value.

5.2 Test data reporting

The data shall be reported as exemplified in Annex D. The report shall be made available if requested.

5.3 Declaration of the yield

When a toner cartridge yield is declared in the user's manual, marketing materials or packaging, at least the following information shall be included

- Description that the declared yield value has been determined in accordance with ISO/IEC 19752.
- Declared yield value of the cartridge

Example:

Toner cartridge yield:	Average Cartridge Yield 5000 standard pages Declared yield value in accordance with ISO/IEC 19752

--`,,`,,`-`-`,,`,,`,`,,`---

© ISO/IEC 2004 – All rights reserved
Copyright International Organization for Standardization
Reproduced by IHS under license with ISO
No reproduction or networking permitted without license from IHS
Not for Resale

Annex A
(informative)

Examples of Fade

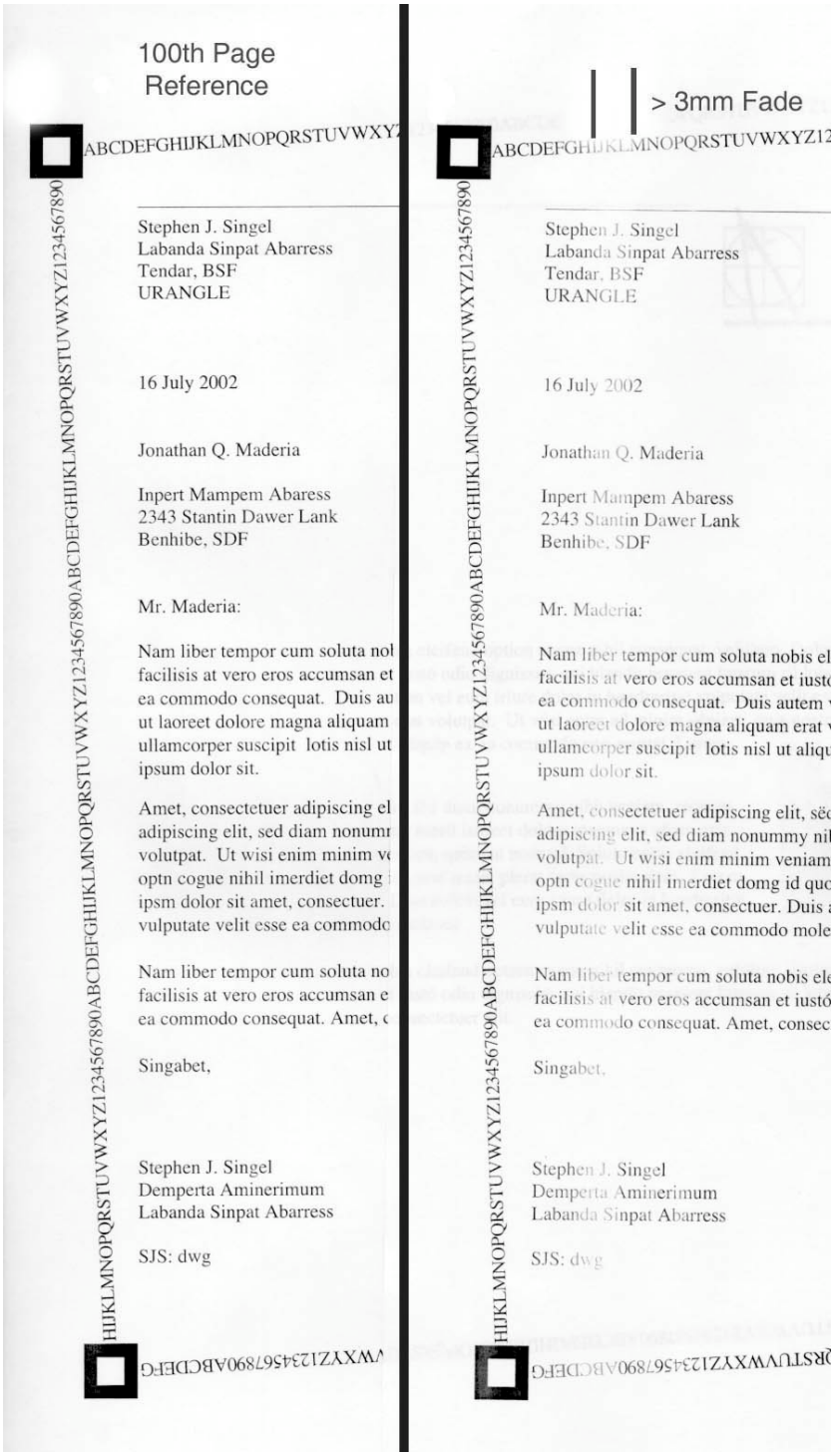

NOTE The test page used in this example is an early version. It is meant to illustrate the fade phenomena only.

--`,,`,,`-`-`,,`,,`,`,,`---
© ISO/IEC 2004 All rights reserved
Copyright International Organization for Standardization
Reproduced by IHS under license with ISO
No reproduction or networking permitted without license from IHS
Not for Resale

Annex B
(informative)

Process Flowchart and Examples

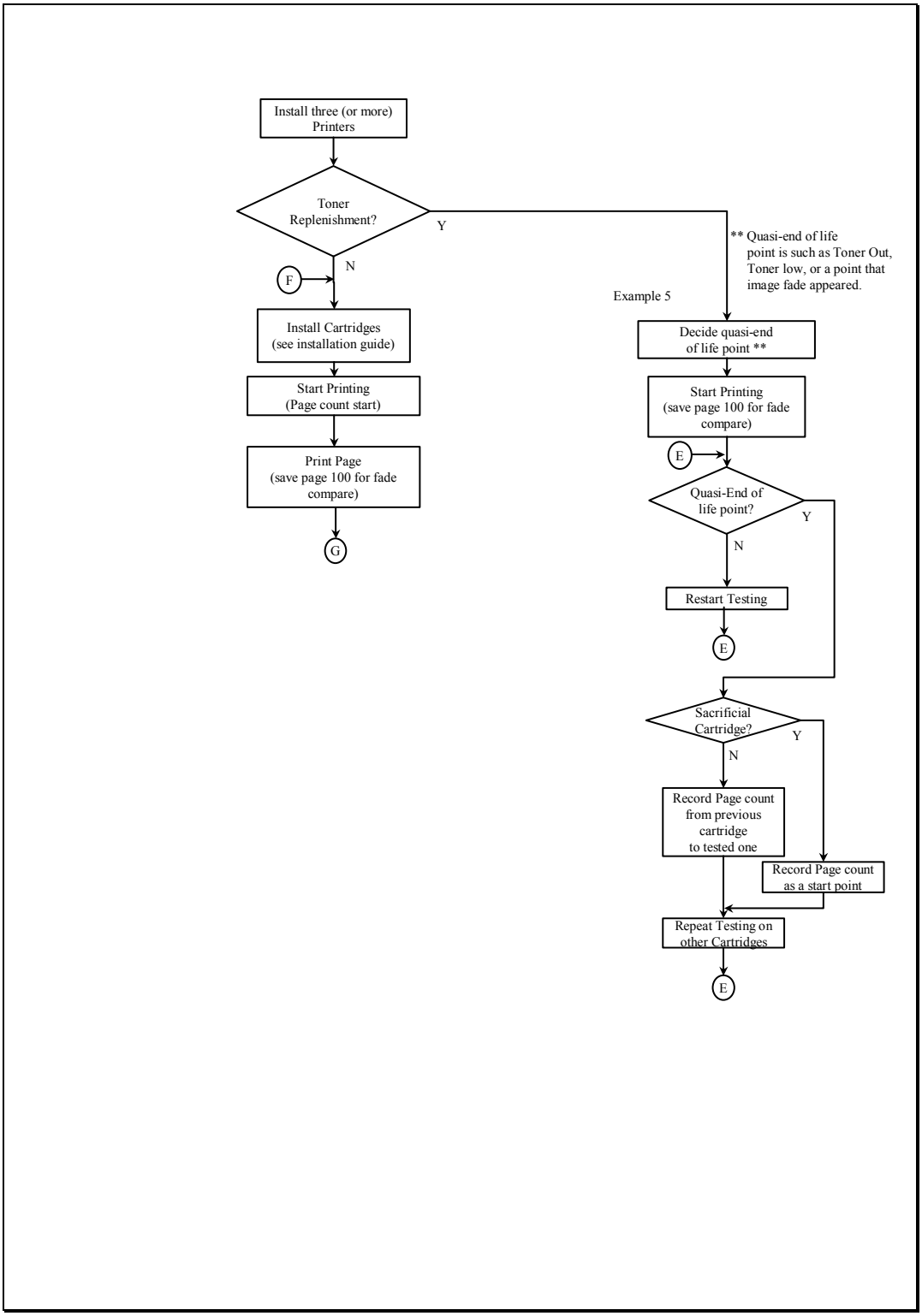

Copyright International Organization for Standardization
Reproduced by IHS under license with ISO
No reproduction or networking permitted without license from IHS
Not for Resale
© ISO/IEC 2004 – All rights reserved

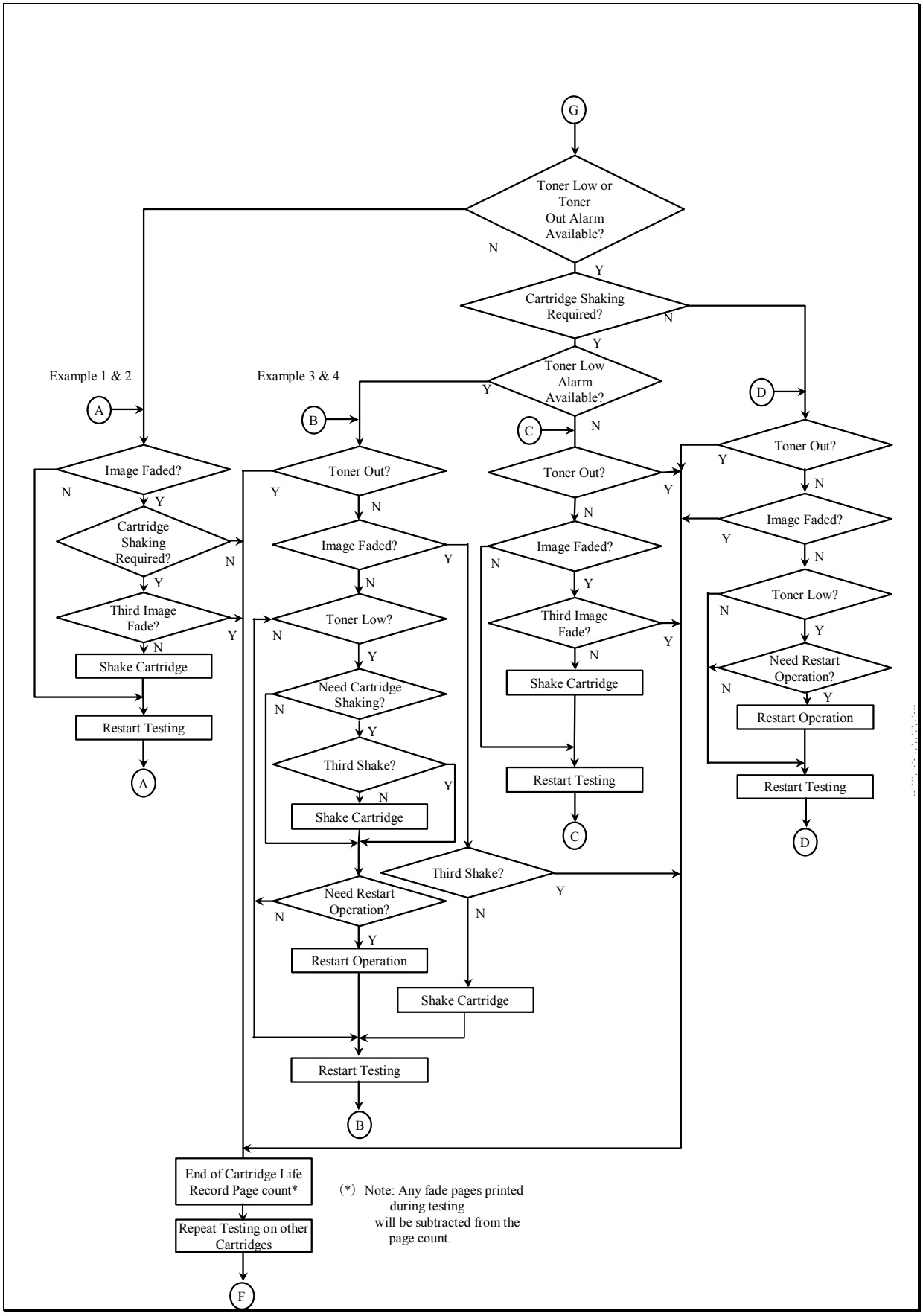

© ISO/IEC 2004 All rights reserved
Copyright International Organization for Standardization
Reproduced by IHS under license with ISO
No reproduction or networking permitted without license from IHS
Not for Resale

Example 1 - no shake procedure is specified for the cartridge and the printer has no Toner Low or Toner Out devices: Cartridge end of life occurs at the first fade. The number of pages printed before the fade will be recorded as that cartridge's page yield.

Example 2 - a shake procedure is specified for the cartridge but the printer has no Toner Low or Toner Out devices: Cartridge end of life occurs at the first fade after 2 shake procedures. The shake procedures are executed at the first 2 fades. (i.e., printing proceeds until a first fade is recognized; the cartridge is shaken; printing resumes until a second fade is recognized; the cartridge is shaken again; printing resumes until the third fade is recognized at which time printing stops). The test report will note for both first and second shake procedures that the shake was done at print fade. Any faded pages that are printed are deducted from the final page count.

Example 3 - a shake procedure is specified for the cartridge, the printer has a Toner Low warning, and there is no Toner Out device: Cartridge end of life occurs at the first fade after 2 shake procedures. The shake procedures can be executed at either the first 2 fades or the first 2 Toner Lows or at a combination of the 2 conditions. The test report will note for both first and second shake procedures whether the shake procedures were done at toner low or at print fade. Any faded pages that are printed are deducted from the final page count.

There are many possible permutations of example 3. These are a few of them:

> The printer is set to stop at Toner Low. At the first stop caused by Toner Low the cartridge is removed and a shake procedure performed. Because of the shake procedure the Toner Low alarm turns off. Printing continues until stopped by the 2nd Toner Low. The cartridge is again removed and a shake procedure performed. Because of the shake procedure the Toner Low alarm turns off. Printing resumes until stopped by a third Toner Low. The printer is restarted without removing the cartridge (for example, by pressing the "Go" button) and printing continues until fade. End of life occurs at the fade. The test report notes that shake procedures 1 and 2 were both executed at Toner Low.
>
> The printer is set to stop at Toner Low. At the first stop caused by Toner Low the cartridge is removed and a shake procedure performed. The Toner Low warning is disabled. Printing resumes until fade. The cartridge is removed and a shake procedure performed. Printing resumes until another fade is recognized. End of life occurs at this fade. The test report notes that shake procedure 1 was executed at Toner Low and shake procedure 2 was executed at fade.

Example 4 - a shake procedure is specified for the cartridge, the printer has a Toner Low warning, and the printer also has a Toner Out device: Cartridge end of life occurs at Toner Out or the first fade after 2 shake procedures, whichever occurs first. If shake procedures are done, they can be executed at either the first 2 fades or the first 2 Toner Lows or at a combination of the 2 conditions. The test report will note for both first and second shake procedures whether the shake procedures were done at toner low or at print fade. Any faded pages that are printed are counted and deducted from the final page count.

Example 5 – the printer uses a replenishment system, no shake procedure is specified for the cartridge, the printer has a Toner Low warning, and the printer also has a Toner Out device: The printer is primed with a sacrificial toner cartridge as defined in section 4.1. The tester chooses a convenient, quasi-end of life point, for example Toner Low or Toner Out. Printing is done with the primer cartridge until the quasi-end of life condition is reached. A test cartridge is installed. Printing resumes until the next occurrence of the quasi-end of life condition. The number of pages printed between the first and second occurrence of the end of life condition will be recorded as that cartridge's page yield. Quasi-end of life for subsequent cartridges is determined in a like manner. The quasi-end of life condition chosen for the test is recorded in the test report.

© ISO/IEC 2004 – All rights reserved
Copyright International Organization for Standardization
Reproduced by IHS under license with ISO
No reproduction or networking permitted without license from IHS
Not for Resale

Annex C
(normative)

Standard test page

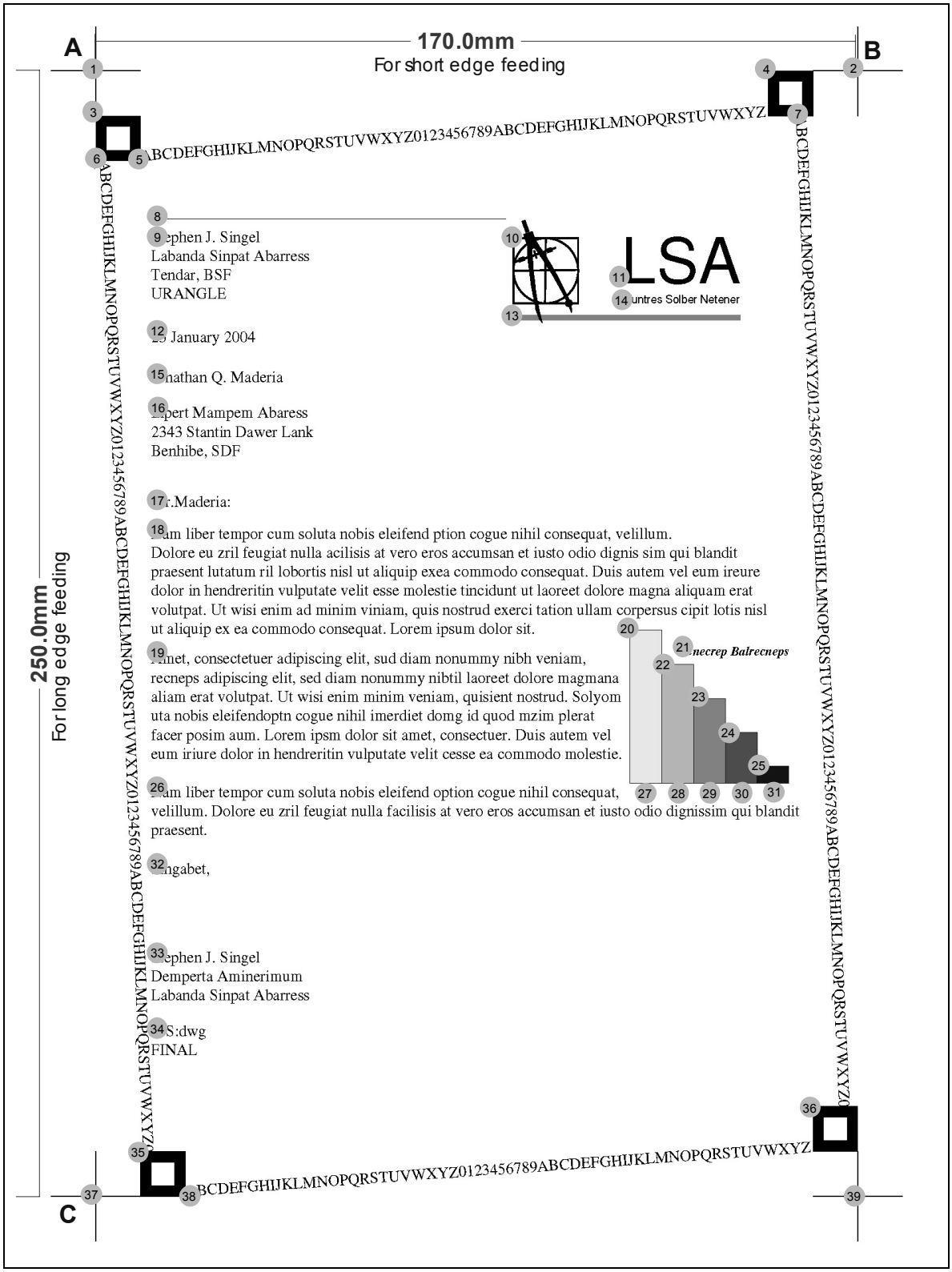

© ISO/IEC 2004 All rights reserved
Copyright International Organization for Standardization
Reproduced by IHS under license with ISO
No reproduction or networking permitted without license from IHS
Not for Resale

Element origins in the circles are given in the following table

	Position					
Number	x	y	Origin	Orientation	Color (setgray)	Feature
1	0.0	0.0	C	0	0	0.2x20mm cross line
2	170.0	0.0	C	0	0	0.2x20mm cross line
3	0.0	-10.0	UL	0	0	10mm square with a white 5mm square center
4	150.0	0.0	UL	0	0	10mm square with a white 5mm square center
5	10.0	-20.0	LL	4	0	3.53mm (10 point) Serif-Yield (embedded)
6	0.9	-20.0	UL	-87.5	0	3.53mm (10 point) Serif-Yield (embedded)
7	156.2	-10.0	UL	-87.5	0	3.53mm (10 point) Serif-Yield (embedded)
8	12.3	-32.9	LC	0	0	0.11mmx79.2mm line
9	12.3	-35.0	UL	0	0	3.53mm (10 point) Serif-Yield (embedded)
10	93.0	-37.0	UL	0	0	Vector Graphic (See description below)
11	117.2	-47.2	LL	0	0	14.11mm (40 point) SansSerif-Yield (embedded)
12	12.3	-60.3	LL	0	0	3.53mm (10 point) Serif-Yield (embedded)
13	93.0	-54.8	LC	0	0.5	1.1mmx50.8mm line
14	118.0	-51.6	LL	0	0	2.47 (7 point) SansSerif-Yield (embedded)
15	12.3	-69.2	LL	0	0	3.53mm (10 point) Serif-Yield (embedded)
16	12.3	-74.1	UL	0	0	3.53mm (10 point) Serif-Yield (embedded)
17	12.3	-96.9	LL	0	0	3.53mm (10 point) Serif-Yield (embedded)
18	12.3	--100.9	UL	0	0	3.53mm (10 point) Serif-Yield (embedded)
19	12.3	-128.7	UL	0	0	3.53mm (10 point) Serif-Yield (embedded)
20	119.2	-124.2	UL	0	0.9	7.1mmx34mm Box with 0.3mm borderline setgray 0
21	130.8	-129.9	LL	0	0	2.82mm (8 point) Serif-BoldItalic-Yield (embedded)
22	126.3	-131.8	UL	0	0.7	7.1mmx26.4mm Box with 0.3mm borderline setgray 0
23	133.4	-139.4	UL	0	0.5	7.1mmx18.9mm Box with 0.3mm borderline setgray 0
24	140.5	-146.9	UL	0	0.3	7.1mmx11.4mm Box with 0.3mm borderline setgray 0
25	147.5	-154.4	UL	0	0.1	7.1mmx3.8mm Box with 0.3mm borderline setgray 0
26	12.3	-158.3	UL	0	0	3.53mm (10 point) Serif-Yield (embedded)
27	121.9	-161.0	LL	0	0	2.12mm (6 point) Serif-BoldItalic-Yield (embedded)
28	129.1	-161.0	LL	0	0	2.12mm (6 point) Serif-BoldItalic-Yield (embedded)
29	136.2	-161.0	LL	0	0	2.12mm (6 point) Serif-BoldItalic-Yield (embedded)
30	143.1	-161.0	LL	0	0	2.12mm (6 point) Serif-BoldItalic-Yield (embedded)
31	150.2	-161.0	LL	0	0	2.12mm (6 point) Serif-BoldItalic-Yield (embedded)
32	12.3	-178.4	LL	0	0	3.53mm (10 point) Serif-Yield (embedded)
33	12.3	-195.0	UL	0	0	3.53mm (10 point) Serif-Yield (embedded)
34	12.3	-214.4	LL	0	0	3.53mm (10 point) Serif-Yield (embedded)
35	10.0	-240.0	UL	0	0	10mm square with a white 5mm square center
36	160.0	-230.0	UL	0	0	10mm square with a white 5mm square center
37	0.0	-250.0	C	0	0	0.2x20mm cross line
38	19.9	-249.9	LL	4	0	3.53mm (10 point) Serif-Yield (embedded)
39	170.0	-250.0	C	0	0	0.2x20mm cross line

C = Center, LL = Lower Left, UL = Upper Left, LC = Lower Center

Spacing between lines on paragraph elements is 4.23mm (12 point)

© ISO/IEC 2004 – All rights reserved
Copyright International Organization for Standardization
Reproduced by IHS under license with ISO
No reproduction or networking permitted without license from IHS
Not for Resale

Logo information

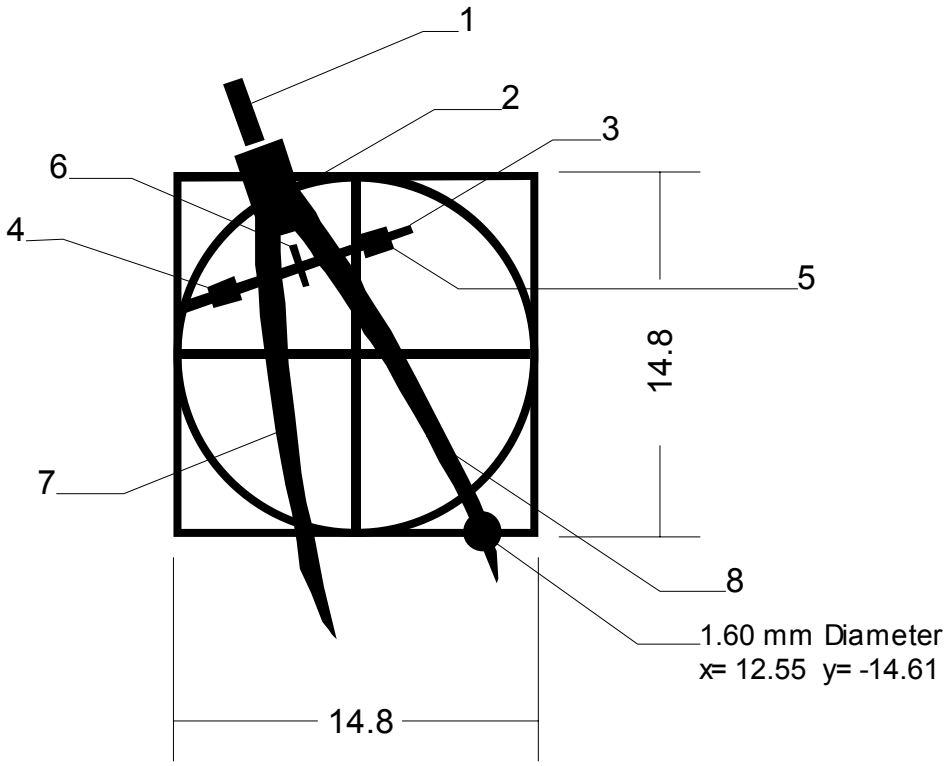

The Circle and square elements are 14.8mm x 14.8mm and all elements 0.35 mm in width.

Other shapes referenced to element 10 define all other parts of the logo. These shapes are filled with solid black and defined by the paths given below. To provide a closed path, every path starts at the first point given and ends as the same point.

Part 1	
X	Y
2.03	3.60
2.79	3.86
3.62	1.30
2.95	1.06

Part 2	
X	Y
2.44	0.67
4.39	1.35
5.60	-2.12
3.63	-2.80

Part 3	
X	Y
0.32	-5.26
9.64	-2.13
9.70	-2.47
0.49	-5.68

Part 4	
X	Y
1.34	-4.66
2.44	-4.24
2.76	-5.09
1.59	-5.51

Part 5	
X	Y
7.52	-2.55
8.62	-2.21
8.94	-3.06
7.77	-3.48

--`,`-`-`,,`,,`,`,,`---

© ISO/IEC 2004 All rights reserved

Copyright International Organization for Standardization
Reproduced by IHS under license with ISO
No reproduction or networking permitted without license from IHS
Not for Resale

Part 6	
X	Y
4.64	-2.97
4.98	-2.81
5.48	-4.55
5.09	-4.48

Part 7	
X	Y
3.26	-1.34
3.34	-1.88
3.34	-3.74
3.42	-4.70
3.51	-5.82
3.84	-8.30
4.13	-10.57
4.35	-11.69
4.52	-12.74
4.79	-13.81
5.03	-15.01
5.16	-16.08
5.55	-17.06
6.01	-18.24
6.30	-18.58
6.40	-18.76
6.64	-18.99
6.08	-16.81
5.63	-14.45
5.38	-13.35
5.20	-12.23
4.96	-9.87
4.67	-7.79
4.54	-5.35
4.44	-4.35
4.35	-3.25
4.35	-2.58
4.02	-2.17

Part 8	
X	Y
5.09	-0.63
5.00	-1.29
4.95	-2.39
5.24	-2.76
5.59	-3.24
5.85	-3.67
6.15	-4.11
6.74	-4.93
7.45	-6.01
7.70	-6.53
8.00	-6.88
8.63	-7.88
9.24	-8.90
9.73	-9.82
10.27	-10.75
10.81	-11.74
11.34	-12.71
11.80	-13.62
12.06	-14.20
12.28	-14.60
13.12	-16.70
13.17	-16.53
13.14	-15.40
12.95	-14.91
12.85	-14.44
12.40	-13.31
11.94	-12.38
9.89	-8.37
8.80	-6.40
8.15	-5.30
7.81	-4.80
7.62	-4.34
6.30	-2.44
5.99	-2.03
5.75	-1.63

- The test page is provided in PDF 1.4 format.
- The lines of characters surrounding the edge of the page are used to determine fade.
- The lines of characters around the edge of the page are skewed to reduce the chance of damage to various components of the printer and cartridge.
- The lines of characters are placed around the page so that the same test file can be used for portrait and landscape printers.
- The blocks in the corners of the test target can be used as fiducials for an automated fade detection system.
- The margins are designed so that the test target can be used with A4 or Letter sized paper.
- All fonts are included in the PDF file and should be printed without font substitution.

--`,,`,,`-`-`,,`,,`,`,,`---
© ISO/IEC 2004 – All rights reserved
Copyright International Organization for Standardization
Reproduced by IHS under license with ISO
No reproduction or networking permitted without license from IHS
Not for Resale

- A common nickname for this page is the “LSA Chart”

- Care must be taken to maintain the designed page size. Before printing, remove all image size modifiers from the engine, printer driver and application software. (i.e. fit to page) If the given tolerances cannot be met with all scaling modifiers off, then testing cannot continue.

- The absolute lightness of the bars in the bar graph may change from printer family to printer family. This is due to variations in the printer design.

- For testing purposes, only the PDF file from the SC28 web server should be used: http://www.iso.org/jtc1/sc28

References:

ISO 15930-1:2003(E), Graphic technology — Prepress digital data exchange Use of PDF —1: Complete exchange using CMYK and spot colour data (PDF/X-1a)

© ISO/IEC 2004 All rights reserved
Copyright International Organization for Standardization
Reproduced by IHS under license with ISO
No reproduction or networking permitted without license from IHS
Not for Resale

Annex D
(informative)

Sample reporting form

Declaration of yield:

Toner cartridge yield:	Average Cartridge Yield 5000 standard pages Declared yield value in accordance with ISO/IEC 19752

Average	5130
Standard Deviation	233
90% Lower Confidence	5028

Date Tested: 2001/10/20 – 2001/10/30

For questions concerning testing contact:
Cartridge Testing Associates
123 Electrophotographic Lane
Toner, IL 87484

Number of Cartridges used in testing:	18
Number of Cartridges used in calculations	16
Type of Cartridge	All-in-one
Shake Procedure Used?	Yes, at toner low signal
Print mode:	Continuous (500 pages/job)
Number of engines used in testing:	5
Media Used:	HiRight 20lb Copy paper
Paper Size:	A4
Paper feed orientation:	Short edge feed
Computer Model:	VectorPC 7155
Driver Version:	Printmat driver Version 1.03b
Operating System:	Linux Build 1001
Application Software:	Acrobat version 5.0
Test Page Version	Version 2.1
Power (off/on) everyday?	Yes

Cartridge serial numbers (Cartridge type: Printomat 7757):

AS123123	AF890933	SE989395	AW98984
AS908584	EW989940	RE989893	RE948999
SD89839	AS9849994	WE899893	AD899849
AD499444	AS123124	AX54445	
AB774843	SE989393	AV03094	

Engine serial numbers (Engine Type: Printabunch 4):

ABA7758-555	ASA7789-944	ABA6686-996	ADA8858-885
ASA7785-865			

© ISO/IEC 2004 – All rights reserved
Copyright International Organization for Standardization
Reproduced by IHS under license with ISO
No reproduction or networking permitted without license from IHS
Not for Resale

Cartridge testing data:

Cartridge	Engine	Temperature			Humidity			Cartridge Yield	Cart Used in Calculation
		Avg	Max	Min	Avg	Max	Min		
AS123123	ABA7758-555	23.5	24	23	51%	53%	47%	5320	Y
AS908594	ABA7758-555	23.5	24	23	50%	52%	47%	4956	Y
SD989839	ABA7758-555	23.5	24	23	52%	53%	48%	5101	Y
AD899849	ABA7758-555	23.5	24	23	49%	52%	48%	5565	Y
AB774843	ABA6686-996	23.5	24	23	50%	53%	47%	4899	Y
AF890933	ABA6686-996	23.5	24	23	48%	52%	47%	5145	Y
AD499444	ABA6686-996							2158	N
EW989940	ASA7785-865	23.5	24	23	50%	52%	48%	5486	Y
AS9849994	ASA7785-865	23.5	24	23	49%	53%	47%	4965	Y
AS123124	ASA7789-944	23.5	24	23	50%	52%	48%	4874	Y
SE989393	ASA7789-944	23.5	24	23	50%	52%	48%	4854	Y
SE989395	ASA7789-944							2340	N
RE989893	ASA7789-944	23.5	24	23	49%	52%	47%	5142	Y
WE899893	ASA7789-944	23.5	24	23	51%	53%	48%	5265	Y
AX54445	ADA8858-885	23.5	24	23	49%	52%	47%	5421	Y
AV03094	ADA8858-885	23.5	24	23	50%	52%	48%	5254	Y
AW98984	ADA8858-885	23.5	24	23	48%	53%	47%	4875	Y
RE948999	ADA8858-885	23.5	24	23	50%	52%	48%	4965	Y

Comments: (As Required):

Cartridge AD499444 was stopped after 2158 pages of testing due to failure of printer ABA6686-996. It was not used in yield calculations

Cartridge SE989395 was stopped after 2340 pages of testing due to toner leakage. It was not used in calculations.

Density was lower on the first ~50 pages of each cartridge then got darker and remained the same till the end of life. Second fade occurred quickly after the first in most cases.
No print quality modifiers were used.

© ISO/IEC 2004 All rights reserved

Copyright International Organization for Standardization
Reproduced by IHS under license with ISO
No reproduction or networking permitted without license from IHS
Not for Resale

Annex E
(informative)

Comparison of Yield for Two Printing Systems

Comparative testing of yield performance is possible using this standard, but care must be taken to assure that the results are valid. All procedures used in the body of the standard will be used in the comparison of two printing systems. Additional requirements and analysis procedures are listed below. Again, it should be noted that this testing methodology is valid only for the testing and comparison of cartridge yield, any other comparisons made are outside the scope of this standard.

Setup

In conducting the test, all variables must be controlled except for the variable under test. For example, if testing two cartridge types in a printing system, the cartridges should be tested at the same time using printers and drivers set to the same settings and printing should be done on the same paper.

Using this test methodology 9 cartridges total will be run to end of life on a total of 3 printers for each printing system in the comparison. Statistics for each printing system can be calculated using the procedure in the body of the standard. To determine whether there is a statistically significant difference in the two printing systems the following analysis should be used.

This analysis tests for differences in yield of two populations when the Population (versus Sample) Standard Deviations are not known and cannot be assumed to be equal. Values are to be calculated as follows:

Degrees of Freedom, df = $$\frac{1}{\frac{c^2}{n_1-1}+\frac{(1-c)^2}{n_2-1}}$$

Where:

n_1 and n_2 are the samples sizes of each test (here, $n_1 = n_2 = 9$)

and $$c=\frac{s_1{}^2/n_1}{(s_1{}^2/n_1)+(s_2{}^2/n_2)}$$

where

s_1 and s_2 are the Sample Standard Deviations of each test (as calculated in Section 6.1).

The *t*-value as follows:

$$t=\frac{\overline{X}_1-\overline{X}_2}{\sqrt{((s_1)^2/n_1)+((s_2)^2/n_2)}}$$

where

$\overline{X}_1$ and $\overline{X}_2$ are the Sample Averages of each test.

If $-t_{\alpha,df} \le t \le t_{\alpha,df}$ then the cartridge yields have NO statistical difference.

Copyright International Organization for Standardization
Reproduced by IHS under license with ISO
No reproduction or networking permitted without license from IHS
© ISO/IEC 2004 – All rights reserved
Not for Resale

If $t < -t_{\alpha,df}$;or; $t > t_{\alpha,df}$ then the cartridge yields ARE statistically different.

Where $t_{\alpha,df}$ can be found in a students t-distribution table as illustrated in Section 6.1.

When comparing the averages of two types of cartridges, it must be reported as follows:

Example:

"There is a 90% confidence that there is (is not) a statistical difference in the average yields between cartridge XYZ and cartridge ABC. The average yield of XYZ cartridge is calculated to be between 9756 and 10136 standard pages, with a calculated sample average print yield of 9998 standard pages. The Average Yield of ABC cartridge is calculated to be between 9547 and 9936 standard pages, with a calculated sample average print yield of 9732 standard pages. (This example assumes an α of 0.1)

© ISO/IEC 2004 All rights reserved

Copyright International Organization for Standardization
Reproduced by IHS under license with ISO
No reproduction or networking permitted without license from IHS
Not for Resale

ICS 37.100.10

Price based on 19 pages

--`,,`,,`-`-`,,`,,`,`,,`---

© ISO/IEC 2004 – All rights reserved

Copyright International Organization for Standardization
Reproduced by IHS under license with ISO
No reproduction or networking permitted without license from IHS

Not for Resale