INTERNATIONAL STANDARD

**ISO/IEC 18836**

First edition
2001-02-15

# Information technology — 8 mm wide magnetic tape cartridge for information interchange — Helical scan recording — MammothTape-2 format

*Technologies de l'information — Cartouche de bande magnétique de* 8 mm *de large pour l'échange d'information — Enregistrement par balayage en spirale — Format «MammothTape-2»*

Reference number
ISO/IEC 18836:2001(E)

© ISO/IEC 2001

Copyright International Organization for Standardization
Provided by IHS under license with ISO
No reproduction or networking permitted without license from IHS

Not for Resale

**PDF disclaimer**

This PDF file may contain embedded typefaces. In accordance with Adobe's licensing policy, this file may be printed or viewed but shall not be edited unless the typefaces which are embedded are licensed to and installed on the computer performing the editing. In downloading this file, parties accept therein the responsibility of not infringing Adobe's licensing policy. The ISO Central Secretariat accepts no liability in this area.

Adobe is a trademark of Adobe Systems Incorporated.

Details of the software products used to create this PDF file can be found in the General Info relative to the file; the PDF-creation parameters were optimized for printing. Every care has been taken to ensure that the file is suitable for use by ISO member bodies. In the unlikely event that a problem relating to it is found, please inform the Central Secretariat at the address given below.

© ISO/IEC 2001

All rights reserved. Unless otherwise specified, no part of this publication may be reproduced or utilized in any form or by any means, electronic or mechanical, including photocopying and microfilm, without permission in writing from either ISO at the address below or ISO's member body in the country of the requester.

ISO copyright office
Case postale 56 • CH-1211 Geneva 20
Tel. + 41 22 749 01 11
Fax + 41 22 749 09 47
E-mail copyright@iso.ch
Web www.iso.ch

Printed in Switzerland



Copyright International Organization for Standardization
Provided by IHS under license with ISO
No reproduction or networking permitted without license from IHS
Not for Resale

© ISO/IEC 2001 – All rights reserved

## Contents


**Section 1 - General** **1**

**1** Scope **1**

**2** Conformance **1**

**2.1** Magnetic tape cartridges **1**
**2.2** Generating drive **1**
**2.3** Receiving drive **1**

**3** References **1**

**4** Definitions **1**

**4.1** a.c. erase **1**
**4.2** algorithm **1**
**4.3** Average Signal Amplitude **1**
**4.4** azimuth **2**
**4.5** back surface **2**
**4.6** bit cell **2**
**4.7** byte **2**
**4.8** cartridge **2**
**4.9** Channel bit **2**
**4.10** Cyclic Redundancy Check (CRC) character **2**
**4.11** Error Correcting Code (ECC) **2**
**4.12** File Mark **2**
**4.13** Logical Beginning of Partition (LBOP) **2**
**4.14** Logical Block **2**
**4.15** magnetic tape **2**
**4.16** Master Standard Reference Tape **2**
**4.17** Partition **2**
**4.18** Physical Beginning of Partition (PBOP) **2**
**4.19** Physical Beginning of Tape (PBOT) **2**
**4.20** Physical End of Partition (PEOP) **2**
**4.21** Physical End of Tape (PEOT) **2**
**4.22** physical recording density **2**
**4.23** Read Back Check (RBC) **2**
**4.24** Reference Field **2**
**4.25** Secondary Standard Reference Tape (SSRT) **2**
**4.26** Set Mark **2**
**4.27** Standard Reference Amplitude (SRA) **2**
**4.28** Standard Reference Current (Ir) **2**
**4.29** Tape Reference Edge **2**
**4.30** Test Recording Current (TRC) **2**
**4.31** Track **3**
**4.32** Typical Field **3**

**5** Conventions and Notations **3**

**5.1** Representation of numbers **3**
**5.2** Names **3**

**6** Acronyms **3**


© ISO/IEC 2001 – All rights reserved


Copyright International Organization for Standardization
Provided by IHS under license with ISO
No reproduction or networking permitted without license from IHS
Not for Resale

| | | |
|---|---|---|
| **7** | Environment and Safety | **4** |
| **7.1** | Testing environment | **4** |
| **7.2** | Operating environment | **4** |
| **7.3** | Storage environment | **4** |
| **7.4** | Transportation | **4** |
| **7.5** | Safety | **4** |
| **7.6** | Flammability | **4** |
| **Section 2 - Requirements for the case** | | **5** |
| **8** | Dimensional and mechanical characteristics of the case | **5** |
| **8.1** | General | **5** |
| **8.2** | Overall dimension | **5** |
| **8.3** | Holding areas | **6** |
| **8.4** | Cartridge insertion | **6** |
| **8.5** | Window | **7** |
| **8.6** | Loading grips | **7** |
| **8.7** | Label areas | **7** |
| **8.8** | Datum areas and datum holes | **7** |
| **8.9** | Support areas | **8** |
| **8.10** | Recognition holes | **9** |
| **8.11** | Write-inhibit hole | **9** |
| **8.12** | Pre-positioning surfaces | **10** |
| **8.13** | Cartridge lid | **10** |
| **8.14** | Cartridge reel lock | **11** |
| **8.15** | Reel access holes | **12** |
| **8.16** | Interface between the reels and the drive spindles | **12** |
| **8.17** | Light path | **14** |
| **8.18** | Position of the tape in the case | **14** |
| **8.19** | Tape path zone | **14** |
| **8.20** | Tape access cavity | **15** |
| **8.21** | Tape access cavity clearance requirements | **15** |
| **Section 3 - Requirements for the Unrecorded Tape** | | **32** |
| **9** | Mechanical, physical and dimensional characteristics of the tape | **32** |
| **9.1** | Materials | **32** |
| **9.2** | Tape length | **32** |
| **9.2.1** | Length of the magnetic tape | **32** |
| **9.2.2** | Length of leader and trailer tapes | **32** |
| **9.2.3** | Length of the cleaning tape | **32** |
| **9.2.4** | Length of the splicing tape | **32** |
| **9.3** | Width | **32** |
| **9.3.1** | Width of magnetic, cleaning, leader and trailer tape | **32** |
| **9.3.2** | Width and position of the splicing tape | **33** |
| **9.3.3** | Edge weave | **33** |
| **9.4** | Discontinuities | **34** |
| **9.5** | Thickness | **34** |
| **9.5.1** | Thickness of the magnetic tape | **34** |
| **9.5.2** | Thickness of the cleaning tape | **34** |
| **9.5.3** | Thickness of leader and trailer tape | **34** |
| **9.5.4** | Thickness of the splice tape | **35** |
| **9.6** | Longitudinal curvature | **35** |
| **9.7** | Cupping | **35** |
| **9.8** | Coating adhesion | **35** |
| **9.9** | Layer-to-layer adhesion | **36** |
| **9.10** | Tensile strength | **36** |


--`,,```,,,,````-`-`,,`,,`,`,,`---



© ISO/IEC 2001 – All rights reserved
Copyright International Organization for Standardization
Provided by IHS under license with ISO
No reproduction or networking permitted without license from IHS
Not for Resale

**9.10.1** Breaking strength **36**
**9.10.2** Yield strength **36**

**9.11** Residual elongation **36**
**9.12** Electrical resistance of the recording surface **36**
**9.13** Tape winding **37**
**9.14** Light transmittance of tape **37**
**9.15** Abrasivity **37**

**10** Magnetic recording characteristics **37**

**10.1** Test conditions **37**
**10.2** Typical Field **37**
**10.3** Signal Amplitude **38**
**10.4** Resolution **38**
**10.5** Signal-to-Noise Ratio **38**
**10.6** Ease of erasure **39**
**10.7** Tape quality **39**

**10.7.1** Missing pulses **39**
**10.7.2** Missing pulse zone **39**
**10.7.3** Overwrite **39**

**Section 4 - Requirements for an Interchanged Tape** **40**

**11** Track Format **40**

**11.1** General **40**
**11.2** Physical block format **41**

**11.2.1** Logical Transfer Segment (LTS) **41**
**11.2.2** Compression Unit **42**
**11.2.3** Physical block **43**
**11.2.4** Information Matrix **50**
**11.2.5** Recorded patterns **51**

**11.3** Search field format **51**
**11.3.1** Search field data **51**

**11.3.2** Search field CRC and ECC **53**
**11.3.3** Search field recording patterns **53**

**11.4** Servo area **53**
**11.5** Track layout **53**

**12** Method of recording **56**

**12.1** Physical Recording Density **56**

**12.1.1** Long Term Average Bit Cell Length **56**
**12.1.2** Short Term Average Bit Cell Length **56**
**12.1.3** Rate of Change **56**

**12.2** Bit Shift **57**
**12.3** Amplitude of Data Signals **57**

**13** Track geometry **57**

**13.1** General **57**
**13.2** Track pitch **57**
**13.3** Average track pitch **57**
**13.4** Track width **57**
**13.5** Track angle **58**
**13.6** Track length **58**
**13.7** Guard band **58**
**13.8** Azimuth angles **58**
**13.9** Track linearity **58**

© ISO/IEC 2001 – All rights reserved

Copyright International Organization for Standardization
Provided by IHS under license with ISO
No reproduction or networking permitted without license from IHS
Not for Resale

**14** Layout of a tape **58**

**14.1** General **58**
**14.2** Tape History Log (THL) **58**
**14.3** Physical Beginning of Partition **59**
**14.4** Logical Beginning of Partition **59**
**14.5** Data area **59**

**14.5.1** General **59**
**14.5.2** Short File Mark **59**
**14.5.3** Long File Mark **59**
**14.5.4** Set Mark **59**

**14.6** End of Data **59**
**14.7** Physical End of Partition (PEOP) **59**

**Annexes**

**A** (normative) - Measurement of Light Transmittance of Tape and Leaders **60**

**B** (normative) - Tape abrasivity measurement procedure **63**

**C** (normative) - Generation of the Logical Block CRC **65**

**D** (normative) - ECC3 Check Bytes **66**

**E** (normative) - Generation of the Data Area CRC **67**

**F** (normative) - Generation of the ECC **68**

**G** (normative) - Pre-coder **69**

**H** (normative) - Representation of 8-bit bytes by 10-bit patterns **70**

**J** (normative) - Randomisation **77**

**K** (normative) - Generation of the Search Field CRC **78**

**L** (normative) - The Search Field ECC **79**

**M** (normative) - Measurement of bit shift **80**

**N** (informative) - Recommendations for transportation **82**

--`,,```,,,,````-`-`,,`,,`,`,,`---



© ISO/IEC 2001 – All rights reserved
Copyright International Organization for Standardization
Provided by IHS under license with ISO
No reproduction or networking permitted without license from IHS
Not for Resale

## Foreword

ISO (the International Organization for Standardization) and IEC (the International Electrotechnical Commission) form the specialized system for worldwide standardization. National bodies that are members of ISO or IEC participate in the development of International Standards through technical committees established by the respective organization to deal with particular fields of technical activity. ISO and IEC technical committees collaborate in fields of mutual interest. Other international organizations, governmental and non-governmental, in liaison with ISO and IEC, also take part in the work.

International Standards are drafted in accordance with the rules given in the ISO/IEC Directives, Part 3.

In the field of information technology, ISO and IEC have established a joint technical committee, ISO/IEC JTC 1. Draft International Standards adopted by the joint technical committee are circulated to national bodies for voting. Publication as an International Standard requires approval by at least 75 % of the national bodies casting a vote.

Attention is drawn to the possibility that some of the elements of this International Standard may be the subject of patent rights. ISO and IEC shall not be held responsible for identifying any or all such patent rights.

This International Standard was prepared by ECMA (as ECMA-293) and was adopted, under a special “fast-track procedure”, by Joint Technical Committee ISO/IEC JTC 1, *Information technology*, in parallel with its approval by national bodies of ISO and IEC.

Annexes A to M form a normative part of this International Standard. Annex N is for information only.

© ISO/IEC 2001 – All rights reserved

Copyright International Organization for Standardization
Provided by IHS under license with ISO
No reproduction or networking permitted without license from IHS
Not for Resale

# Information technology - 8 mm wide magnetic tape cartridge for information interchange - Helical scan recording - MammothTape-2 format

## Section 1 - General

## 1 Scope

This International Standard specifies the physical and magnetic characteristics of an 8 mm wide magnetic tape cartridge to enable physical interchange of such cartridges between drives. It also specifies the quality of the recorded signals, the recording method and the recorded format called MammothTape-2, and thereby allowing data interchange between drives by means of such magnetic tape cartridges.

Information interchange between systems also requires, at a minimum, agreement between the interchange parties upon the interchange code(s) and the specifications of the structure and labelling of the information on the interchanged cartridge.

## 2 Conformance

### 2.1 Magnetic tape cartridges

A magnetic tape cartridge shall be in conformance with this International Standard if it satisfies all mandatory requirements of this International Standard throughout the extent of the tape.

### 2.2 Generating drive

A drive generating a magnetic tape cartridge for interchange shall be entitled to claim conformance with this International Standard if all the recordings that it makes on a tape meet the mandatory requirements of this International Standard. A claim of conformance shall state whether or not one or more registered compression algorithm(s) are implemented within the system to process data from the host prior to allocating data to physical blocks.

### 2.3 Receiving drive

A system receiving a magnetic tape cartridge for interchange shall be entitled to claim conformance with the International Standard if it is able to handle any recording on this tape according to this International Standard. A receiving drive shall be able to recognise the use of a data compression algorithm and make the algorithm registration number available to the host.

## 3 Normative references

The following normative documents contain provisions which, through reference in this text, constitute provisions of this International Standard. For dated references, subsequent amendments to, or revisions of, any of these publications do not apply. However, parties to agreements based on this International Standard are encouraged to investigate the possibility of applying the most recent editions of the normative documents indicated below. For undated references, the latest edition of the normative document referred to applies. Members of ISO and IEC maintain registers of currently valid International Standards.

| | |
|---|---|
| IEC 60950:1999 | *Safety of information technology equipment.* |
| ISO 527-3:1995 | *Plastics - Determination of tensile properties - Part 3: Test conditions for films and sheets.* |
| ISO 1302:1992 | *Technical Drawings - Method of indicating surface texture.* |
| ISO/IEC 11576:1994 | *Information technology - Procedure for the registration of algorithms for the lossless compression of data.* |
| ISO/IEC 15200:1996 | *Information technology - Adaptive Lossless Data Compression algorithm (ALDC).* |

## 4 Terms and definitions

For the purposes of this International Standard, the following terms and definitions apply.

**4.1 a.c. erase:** A process of erasure utilising alternating magnetic fields of decaying intensity.

**4.2 algorithm:** A set of rules for transforming the logical representation of data.

**4.3 Average Signal Amplitude:** The average peak-to-peak value of the output signal from the read head at a density of 3 704 ftpmm measured over a distance of 3000 mm, exclusive of missing pulses.

© ISO/IEC 2001 – All rights reserved

Copyright International Organization for Standardization
Provided by IHS under license with ISO
No reproduction or networking permitted without license from IHS
Not for Resale

**4.4 azimuth:** The angular deviation, in degrees of arc, of the recorded flux transitions on a track from a line normal to the track centreline.

**4.5 back surface:** The surface of the tape opposite to the magnetic coating used to record data.

**4.6 bit cell:** A distance along the track allocated for the recording of a Channel bit.

**4.7 byte:** An ordered set of bits acted upon as a unit.

**4.8 cartridge:** A case containing magnetic tape stored on twin reels.

**4.9 Channel bit:** A bit after 8-10 transformation.

**4.10 Cyclic Redundancy Check (CRC) character:** A character derived from information contained in data bytes that is used for error detection.

**4.11 Error Correcting Code (ECC):** A mathematical procedure yielding bytes used for the detection and correction of errors.

**4.12 File Mark:** A mark recorded on the tape at the request of the host system to separate files or to provide an append point. This format provides for Long or Short File Marks.

**4.13 Logical Beginning of Partition (LBOP):** The point in a partition where a recording of data for interchange commences.

**4.14 Logical Block:** Information (data, file marks, or set marks) sent to the tape drive to be recorded.

**4.15 magnetic tape:** A tape that accepts and retains magnetic signals intended for input, output, and storage of data for information processing.

**4.16 Master Standard Reference Tape:** A tape selected as the standard for Signal Amplitude, Typical Field, Overwrite and Resolution.

Note - The Master Standard Reference Tape has been established by Pericomp Corporation.

**4.17 Partition:** A formatted length of tape used to record data.

**4.18 Physical Beginning of Partition (PBOP):** The point along the length of tape at which a partition begins.

**4.19 Physical Beginning of Tape (PBOT):** The transition from the tape leader to an opaque area of the splice by which a translucent leader tape is joined to the magnetic tape.

**4.20 Physical End of Partition (PEOP):** The point along the length of tape at which a partition ends.

**4.21 Physical End of Tape (PEOT):** The transition from an opaque area of the splice to a translucent trailer tape.

**4.22 physical recording density:** The number of recorded flux transitions per unit length of track, expressed in flux transitions per millimetre (ftpmm).

**4.23 Read Back Check (RBC):** A Read Back Check occurs when, while writing, the data is read by trailing heads and checked for errors.

**4.24 Reference Field:** The Typical Field of the Master Standard Reference Tape.

**4.25 Secondary Standard Reference Tape (SSRT):** A tape the performance of which is known and stated in relation to that of the Master Standard Reference Tape.

Note - Secondary Standard Reference Tapes can be ordered under the Part Number *SSRT/M.AME/PC97*, from Pericomp Corporation, 14 Huron Drive, Natick, MA 01760, USA.

In principle, such tapes will be available for a period of 10 years from the publication of the first edition of this International Standard. However, by agreement between ISO/IEC and Pericomp, this period may be shortened or extended to take account of demand for such tapes.

It is intended that these be used for calibrating Tertiary Reference Tapes for use in routine calibration.

**4.26 Set Mark:** A mark recorded on the tape at the request of the host system to separate a set of data or to provide an append point.

**4.27 Standard Reference Amplitude (SRA):** The Average Signal Amplitude derived from the Master Standard Reference Tape, using the Test Recording Current at 3 704 ftpmm.

**4.28 Standard Reference Current (Ir):** The current that produces the Reference Field.

**4.29 Tape Reference Edge:** The lower edge of tape as seen when viewing the recording surface of the tape with the supply reel to the observer's right.

**4.30 Test Recording Current (TRC):** The current used to record the SRA. The TRC is 1,5 times the Standard Reference Current.


© ISO/IEC 2001 – All rights reserved
Copyright International Organization for Standardization
Provided by IHS under license with ISO
No reproduction or networking permitted without license from IHS
Not for Resale

**4.31 Track:** A diagonally positioned area on the tape along which a series of magnetic transitions may be recorded.

**4.32 Typical Field:** In the plot of the Average Signal Amplitude against the recording field at the physical recording density of 3 704 ftpmm, the minimum field that causes an Average Signal Amplitude equal to 90% of the maximum Average Signal Amplitude.

# 5 Conventions and Notations

## 5.1 Representation of numbers

A measured value is rounded off to the least significant digit of the corresponding specified value. It implies that a specific value of 1,26 with a positive tolerance of +0,01, and a negative tolerance of -0,02 allows a range of measured values from 1,235 to 1,275.

— Letters and digits in parentheses represent numbers in hexadecimal notation.

— The setting of a bit is denoted by ZERO or ONE.

— Numbers in binary notation and bit combinations are represented by strings of digits 0 and 1.

— Numbers in binary notation and bit combinations are shown with the most significant byte to the left, and with the most significant bit in each byte to the left.

— Negative values of numbers in binary notation are given in Two's complement.

— In each field the data is processed so that the most significant byte (byte 0) is processed first. Within each byte the most significant bit (numbered 7 in an 8-bit byte) is processed first, least significant bit is numbered 0 and is processed last. This order of processing applies also to the data input to the Error Detection and Correction circuits and to their output, unless otherwise stated.

## 5.2 Names

The names of entities, e.g. specific tracks, fields, etc., are given with a capital initial.

# 6 Acronyms

ABID Augmentative Block Identifier
BID Block Identifier
CRC Cyclic Redundancy Check
CUH Compression Unit Header
CUID Compression Unit Identifier
ECC Error Correction Code
EOD End of Data
FID File Identifier
LBOP Logical Beginning of Partition
LID Logical Block Identifier
lsb Least Significant Bit
LSB Least Significant Byte
LTS Logical Transfer Segment
msb Most Significant Bit
MSB Most significant Byte
PBOP Physical Beginning of Partition
PBOT Physical Beginning of Tape
PEOP Physical End of Partition
PEOT Physical End of Tape
PID Physical Identifier
RBC Read Back Check
SID Stream Identifier
SMID Set Mark Identifier
SRA Standard Reference Amplitude
SSRT Secondary Standard Reference Tape
THL Tape History Log
TRC Test Recording Current

© ISO/IEC 2001 – All rights reserved

Copyright International Organization for Standardization
Provided by IHS under license with ISO
No reproduction or networking permitted without license from IHS
Not for Resale

# 7 Environment and Safety

The conditions specified below refer to the ambient conditions immediately surrounding the cartridge.

Cartridges exposed to environments outside these limits may still be able to function usefully; however, such exposure may cause permanent damage.

## 7.1 Testing environment

Unless otherwise specified, tests and measurements made on the cartridge to check the requirements of this International Standard shall be carried out under the following conditions

| | |
|---|---|
| temperature: | 23 °C ± 2 °C |
| relative humidity: | 40 % to 60 % |
| conditioning period before testing: | 24 h min. |

## 7.2 Operating environment

Cartridges used for data interchange shall be capable of operating under the following conditions

| | |
|---|---|
| temperature: | 5 °C to 45 °C |
| relative humidity: | 20 % to 80 % |
| wet bulb temperature: | 26 °C max. |

The average temperature of the air immediately surrounding the tape shall not exceed 45°C.

If a cartridge has been exposed during storage and/or transportation to conditions outside the above values, before use the cartridge shall be conditioned in the operating environment for a time at least equal to the period during which it has been out of the operating environment, up to a maximum of 24 h.

## 7.3 Storage environment

The following conditions shall be observed during storage

| | |
|---|---|
| temperature: | 5 °C to 32 °C |
| relative humidity: | 20 % to 60 % |
| stray magnetic field: | shall not exceed 4 000 A/m at any point on the tape. |

There shall be no deposit of moisture on or in the cartridge.

## 7.4 Transportation

Recommended limits for the environments, to which a cartridge may be subjected during transportation, and the precautions to be taken to minimise the possibility of damage, are provided in annex N.

## 7.5 Safety

The cartridge shall satisfy the safety requirements of IEC 60950 when used in the intended manner or in any foreseeable use in an information processing system.

## 7.6 Flammability

The cartridge shall be made from materials that comply with the flammability class for HB materials, or better, as specified in IEC 60950.


© ISO/IEC 2001 – All rights reserved
Copyright International Organization for Standardization
Provided by IHS under license with ISO
No reproduction or networking permitted without license from IHS
Not for Resale

## Section 2 - Requirements for the case

# 8 Dimensional and mechanical characteristics of the case

## 8.1 General

The cartridge shall consist of the following elements:

— a case
— recognition holes
— a write inhibit mechanism
— twin reels containing magnetic tape
— a locking mechanism for the reels

Dimensional characteristics are specified for those parameters deemed to be mandatory for interchange and compatible use of the cartridge. Where there is freedom of design, only the functional characteristics of the elements described are indicated. In the figures a typical implementation is represented in third angle projections.

Figure 1 shows a perspective view of the cartridge seen from the top.
Figure 2 shows a perspective view of the cartridge seen from the bottom.
Figure 3 shows a perspective view of Reference Planes X, Y and Z.
Figure 4 shows the front side with the lid closed.
Figure 5 shows the left side with the lid closed.
Figure 6 shows the top side with the lid closed.
Figure 7 shows the right side with the lid closed.
Figure 8 shows the rear side with the lid closed.
Figure 9 shows the bottom side, datum and support areas.
Figure 10 shows the bottom side with the lid removed.
Figure 11 shows the enlarged view of the datum and recognition holes.
Figure 12 shows cross-sections through the light path holes, the recognition holes and the write-inhibit hole.
Figure 13 shows details of the lid when closed, rotating and open.
Figure 14 shows details of the lid release insertion channel.
Figure 15 shows the lid lock release requirements.
Figure 16 shows the reel lock release requirements.
Figure 17 shows the reel unlock force direction.
Figure 18 shows the lid release force direction.
Figure 19 shows the lid opening force direction.
Figure 20 shows the light path and light window.
Figure 21 shows the internal tape path and light path.
Figure 22 shows the cartridge reel and a cross-section view of the cartridge reel.
Figure 23 shows a cross-section view of the cartridge reel interface with the drive spindle.
Figure 24 shows the tape access cavity clearance requirements.

The dimensions are referred to three orthogonal Reference Planes X, Y and Z (see figure 3).

Plane X is perpendicular to Plane Z and passes through the centres of the Datum Holes A and B.

Plane Y is perpendicular to Plane X and Plane Z and passes through the centre of Datum Hole A.

Datum area A, B and C shall lie in Plane Z.

## 8.2 Overall dimension (figures 5 and 6)

The length of the case shall be

$l_1 = 62{,}5 \text{ mm} \pm 0{,}3 \text{ mm}$

The width of the case shall be

$l_2 = 95{,}0 \text{ mm} \pm 0{,}2 \text{ mm}$

The distance from the top of the case to Plane Z shall be

$l_3 = 15{,}0 \text{ mm} \pm 0{,}2 \text{ mm}$

The distance from the rear side to Plane X shall be

© ISO/IEC 2001 – All rights reserved

Copyright International Organization for Standardization
Provided by IHS under license with ISO
No reproduction or networking permitted without license from IHS
Not for Resale

$l_4$ = 47,35 mm ± 0,15 mm

The distance from the right side to Plane Y shall be

$l_5$ = 13,0 mm ± 0,1 mm

## 8.3 Holding areas

The holding areas shown hatched in figure 6 shall be the areas along which the cartridge shall be held down when inserted into the drive. The distance of the holding areas from Plane X shall be

$l_6$ = 12,0 mm max.

The width when measured from the edge of the case shall be

$l_7$ = 3,0 mm min.

## 8.4 Cartridge insertion

The cartridge shall have asymmetrical features to prevent insertion into the drive in other than the correct orientation. These consist of an insertion channel, a recess and an incline.

The insertion channel (figures 4 and 14) shall provide for an unobstructed path, when the lid is closed and locked, to unlock the lid. The distance of the insertion channel from Plane Y shall be

$l_8$ = 79,7 mm ± 0,2 mm

There shall be a chamfer at the beginning of the insertion channel defined by

$l_9$ = 1,0 mm ± 0,1 mm

$l_{16}$ = 1,5 mm ± 0,1 mm

An additional chamfer further into the insertion channel shall be defined by

$l_{10}$ = 0,7 mm ± 0,1 mm

$l_{17}$ = 1,0 mm ± 0,1 mm

$l_{18}$ = 3,8 mm ± 0,1 mm

The innermost width of the insertion channel shall be

$l_{11}$ = 1,0 mm min.

The thickness of the lid shall be

$l_{12}$ = 1,2 mm ± 0,1 mm

There shall be a chamfer on the lid defined by

$l_{13}$ = 0,8 mm ± 0,1 mm

$l_{14}$ = 1,2 mm ± 0,1 mm

The lid shall extend from the case a distance of

$l_{15}$ = 0,5 mm ± 0,1 mm

The distance from the left side of the case to the lid lock shall be

$l_{19}$ = 0,2 mm ± 0,2 mm

The height of the insertion area shall be

$l_{20}$ = 2,3 mm min.

$l_{21}$ = 2,5 mm ± 0,2 mm

The recess is located on the right side of the cartridge. The position and dimensions (figures 5, 7 and 10) shall be defined by

$l_{22}$ = 7,5 mm max.

$l_{23}$ = 11,0 mm ± 0,2 mm



--`,,```,,,,````-`-`,,`,,`,`,,`---

© ISO/IEC 2001 – All rights reserved

Copyright International Organization for Standardization
Provided by IHS under license with ISO
No reproduction or networking permitted without license from IHS

Not for Resale

$l_{24}$ = 1,5 mm ± 0,1 mm

The depth of the recess shall be

$l_{25}$ = 1,5 mm ± 0,1 mm

The incline (figure 13a) is part of the lid structure. The distance of the incline from Plane X shall be defined by

$l_{26} = 7{,}7\ \text{mm}\ {}^{+\ 0{,}0\ \text{mm}}_{-\ 2{,}5\ \text{mm}}$

The angle of the incline shall be

$a_1 = 20^o \pm 1^o$

The incline shall end when it intersects the radius $r_3$ (see clause 8.13).

### 8.5 Window (figure 1)

A window may be provided on the top side so that parts of the reels are visible. The window, if provided, shall not extend beyond the height of the cartridge.

### 8.6 Loading grips (figures 5 and 7)

The cartridge shall have recessed loading grips on each side to aid an automatic loading mechanism.

The distance from Plane X to the centreline of the loading grip shall be

$l_{28}$ = 39,35 mm ± 0,20 mm;

The distance from Plane Z on the bottom side and from the top side shall be

$l_{29}$ = 1,5 mm ± 0,1 mm;

The width of the indent shall be

$l_{30}$ = 5,0 mm ± 0,3 mm;

The depth of the indent shall be

$l_{31}$ = 2,0 mm ± 0,2 mm;

and the angle of the indent

$a_2 = 90^o \pm 5^o$.

### 8.7 Label areas (figures 6 and 8)

A portion of the rear side of the cartridge and a portion of the top side of the cartridge may be used for labels. The position and the size of the labels shall not interfere with the operation or clearance requirements of the cartridge component parts.

The area used for labels on the top side shall not extend beyond the inner edge of the holding areas defined by $l_6$ and $l_7$.

The position and dimensions of the label area on the rear side shall be defined by

$l_{32}$ = 0,5 mm min.

$l_{33}$ = 1,5 mm min.

$l_{34}$ = 80,0 mm max.

The depth of the top side label area shall be 0,3 mm max. The depth of the rear side label area shall be 0,30 mm ± 0,05 mm.

### 8.8 Datum areas and datum holes

The annular datum areas A, B and C shall lie in Plane Z (see figures 9, 10 and 11). They determine the vertical position of the cartridge in the drive. Each shall have a diameter $d_1$ equal to 6,0 mm ± 0,1 mm and be concentric with the respective datum hole.

The centres of datum holes A and B lie in Plane X.

The centre of the circular datum hole A shall be at the intersection of planes X and Y (see figure 10).

© ISO/IEC 2001 – All rights reserved

Copyright International Organization for Standardization
Provided by IHS under license with ISO
No reproduction or networking permitted without license from IHS
Not for Resale

The distance from the centre of datum hole B to Plane Y (see figure 9) shall be

$l_{35}$ = 68,0 mm ± 0,1 mm

The distance from the centre of the circular datum hole C to Plane Y (see figure 11) shall be

$l_{36}$ = 10,20 mm ± 0,05 mm

The distance from the centre of datum hole D to Plane Y (see figure 11) shall be

$l_{37}$ = 79,2 mm ± 0,1 mm

The distance from the centres of datum holes C and D to Plane X (see figure 10) shall be

$l_{38}$ = 36,35 mm ± 0,08 mm

The thickness of the case in the datum areas shall be

$l_{39}$ = 1,2 mm ± 0,1 mm

The diameter at the bottom of datum hole A and datum hole C shall be

$l_{40}$ = 2,6 mm min.

The depth of the holes shall be

$l_{42}$ = 4,0 mm min.

The upper diameter of datum holes A and C shall be

$l_{44} = 3{,}00\ \text{mm}\ ^{+\ 0{,}05\ \text{mm}}_{-\ 0{,}00\ \text{mm}}$

This diameter shall be to a depth of

$l_{41}$ = 1,5 mm min.

There shall be a chamfer around the outside of datum hole A and datum hole C defined by

$l_{43}$ = 0,3 mm max.

$a_3 = 45^{o} \pm 1^{o}$

The width at the bottom of datum holes B and D shall be $l_{40}$.

The depth of the holes shall be $l_{42}$.

The dimensions at the top of the holes shall be

$l_{45}$ = 3,5 mm ± 0,1 mm

$l_{46}$ = 3,00 mm ± 0,05 mm
$r_1$ = 1,75 mm ± 0,05 mm

This width shall be to a depth $l_{41}$.

There shall be a chamfer around the outside of datum holes B and D defined by $l_{43}$ and $a_3$.

### 8.9 Support areas (figure 9)

The cartridge Support areas are shown shaded in figure 9. Support areas A', B' and C' shall be coplanar with Datum areas A, B and C, respectively, within 0,1 mm. Support area D' shall be coplanar with Plane Z within 0,15 mm.

The areas within $l_{49}$ of the edge of the cartridge shall be recessed from the Support Areas.

$l_{49}$ = 0,5 mm ± 0,1 mm

Support areas A' and B' shall extend from Plane X towards the front of the case a distance

$l_{47}$ = 10,0 mm ± 0,1 mm

Support areas A' and B' shall extend from the centre of the Datum holes toward the outside of the case a distance $l_{47}$.


© ISO/IEC 2001 – All rights reserved
Copyright International Organization for Standardization
Provided by IHS under license with ISO
No reproduction or networking permitted without license from IHS
Not for Resale

Support areas A' and B' shall extend from the centre of the Datum holes toward the inside of the case a distance of

$l_{48}$ = 11,0 mm ± 0,1 mm

Support areas A' and B' shall extend from Plane X toward the rear of the case a distance of

$l_{50}$ = 7,0 mm ± 0,1 mm

The distance of Support areas C' and D' from Plane X shall be

$l_{51}$ = 30,0 mm ± 0,1 mm

The dimensions of Support areas C' and D' shall be defined by $l_{47}$ and

$l_{52}$ = 5,5 mm ± 0,1 mm

$l_{53}$ = 64,5 mm ± 0,2 mm

### 8.10 Recognition holes (figures 10, 11 and 12)

There shall be 5 recognition holes numbered 1 to 5 as shown in figure 11.

The centre of recognition hole 1 shall be defined by

$l_{54}$ = 43,35 mm ± 0,15 mm

$l_{57}$ = 6,4 mm ± 0,1 mm

The centre of recognition hole 2 shall be defined by $l_{54}$ and $l_{57}$.

The centre of recognition hole 3 shall be defined by $l_{54}$ and

$l_{58}$ = 79,0 mm ± 0,2 mm

The centre of recognition hole 4 shall be defined by

$l_{55}$ = 3,7 mm ± 0,1 mm

$l_{56}$ = 2,3 mm ± 0,1 mm

The centre of recognition hole 5 shall be defined by $l_{55}$ and $l_{56}$.

All recognition holes shall have the cross-section E-E and F-F shown in figure 12 and shall have a diameter of 3,0 mm ± 0,1 mm.

The depth of a closed recognition hole below Plane Z shall be

$$l_{59} = 1{,}2 \text{ mm} \begin{matrix} +0{,}3 \text{ mm} \\ - 0{,}1 \text{ mm} \end{matrix}$$

The depth of an open recognition hole below Plane Z shall be

$l_{60}$ = 5,0 mm min.

One of the cross-sections shows a recognition hole closed by a plug. The other shows one hole with the plug punched out and the other hole closed by a plug. These plugs shall withstand an applied force of 0,5 N max. without being punched out.

This International Standard prescribes the following states of these holes.

— Recognition hole 1 shall be open.
— Recognition hole 2 shall be closed.
— Recognition hole 3 shall be open.
— Recognition hole 4 shall be closed.
— Recognition hole 5 shall be closed.

### 8.11 Write-inhibit hole (figures 11 and 12)

The centre of the Write-inhibit hole shall be defined by $l_{54}$ and

$l_{61}$ = 10,0 mm ± 0,1 mm

The diameter of the hole shall be 3,0 mm ± 0,1 mm.

--`,,```,,,,````-`-`,,`,,`,`,,`---

© ISO/IEC 2001 – All rights reserved

Copyright International Organization for Standardization
Provided by IHS under license with ISO
No reproduction or networking permitted without license from IHS
Not for Resale

The depth of a closed Write-inhibit hole below Plane Z shall be $l_{59}$.

The depth of an open Write-inhibit hole below Plane Z shall be $l_{60}$.

When the Write-inhibit hole is open, recording on the tape is inhibited. When it is closed, recording is enabled.

The case may have a movable element allowing the Write-inhibit hole to be opened or closed. If present, this element shall be such that the state of the Write-inhibit hole shall be visible (see figure 8 as an example). The Write-inhibit hole closure shall be constructed to withstand a force of 0,5 N. The force required to open or close the Write-inhibit hole shall be between 1 N and 15 N.

### 8.12 Pre-positioning surfaces (figures 4 and 10)

These surfaces determine the position of the cartridge when it is inserted into the drive loading slot.

The distance from Plane Z to the surface on which the tape reference edge rests (figure 4) shall be

$$l_{62} = 2{,}4 \text{ mm} \begin{matrix} +\ 0{,}0 \text{ mm} \\ -\ 0{,}1 \text{ mm} \end{matrix}$$

Positioning of the cartridge relative to Plane Y shall be controlled by the surfaces defined by

$l_{63} = 1{,}0 \text{ mm} \pm 0{,}1 \text{ mm}$

$l_{64} = 69{,}0 \text{ mm} \pm 0{,}2 \text{ mm}$

Positioning of the cartridge relative to Plane X shall be controlled by the surfaces defined by

$l_{65} = 14{,}65 \text{ mm} \pm 0{,}10 \text{ mm}$

The position and angle of the chamfer at the edge of this surface shall be defined by

$l_{66} = 13{,}15 \text{ mm} \pm 0{,}10 \text{ mm}$

$a_4 = 45^{o} \pm 1^{o}$

### 8.13 Cartridge lid (figures 6 and 13)

The cartridge shall have a lid for protection of the tape during handling, storage and transportation. The lid consists of two parts, the main part and an auxiliary part.

The main part rotates around axis A (see figure 13) the position of which is fixed relative to the case.

The location of axis A shall be defined by

$$l_{27} = 0{,}55 \text{ mm} \begin{matrix} +\ 0{,}05 \text{ mm} \\ -\ 0{,}10 \text{ mm} \end{matrix}$$

$l_{67} = 7{,}5 \text{ mm} \pm 0{,}1 \text{ mm}$

The auxiliary part rotates around axis B the position of which is fixed relative to the main part of the lid and moves with it. When the lid is in the closed position, the location of axis B shall be defined by

$l_{68} = 7{,}0 \text{ mm} \pm 0{,}1 \text{ mm}$

$l_{69} = 10{,}1 \text{ mm} \pm 0{,}1 \text{ mm}$

The rotation of the auxiliary part is controlled by a cam at each end to give the path indicated in figure 13.

The auxiliary part, when fully opened, shall allow a clearance of

$l_{70} = 14{,}8 \text{ mm min.}$

$l_{71} = 11{,}5 \text{ mm} \pm 0{,}2 \text{ mm}$
$l_{72} = 1{,}2 \text{ mm} \pm 0{,}1 \text{ mm}$

When the lid is completely open, neither part shall extend above a plane located $l_{73}$ above and parallel to Plane Z.

$l_{73} = 22{,}3 \text{ mm max.}$

The angle to the bottom of the lid from Plane Z when the lid is completely open shall be

$a_5 = 85^{o} \pm 2^{o}$



--`,,```,,,,````-`-`,,`,,`,`,,`---

© ISO/IEC 2001 – All rights reserved

Copyright International Organization for Standardization
Provided by IHS under license with ISO
No reproduction or networking permitted without license from IHS

Not for Resale

When the lid is in a partially open position, neither part shall extend above a plane located $l_{74}$ above and parallel to Plane Z.

$l_{74}$ = 22,5 mm max.

The path of the top of the lid as it opens shall be defined by

$r_2$ = 14,9 mm max.

The start point of the incline on the case that meets the lid (cross-section B-B in figure 6) shall be defined by

$l_{75}$ = 8,4 mm max.

The height of the lid from Plane Z (figure 13) shall be

$l_{76} = 15{,}2\ \text{mm}^{+\ 0{,}0\ \text{mm}}_{-\ 0{,}5\ \text{mm}}$

The front of the lid measured from Plane X shall be

$l_{77} = 15{,}3\ \text{mm}^{+\ 0{,}0\ \text{mm}}_{-\ 0{,}3\ \text{mm}}$

The inside of the lid shall provide clearance for the tape defined by

$l_{78}$ = 13,15 mm ± 0,10 mm

The top front of the lid shall have a radius $r_3$. The centre of the radius shall be axis A.

$r_3 = 14{,}7\ \text{mm}^{+\ 0{,}0\ \text{mm}}_{-\ 0{,}3\ \text{mm}}$

The design of the locking mechanism is not specified by this International Standard except that it shall be operated by a release pin in the drive. The lid release mechanism shall be actuated when the drive release pin is in the shaded area (see figure 15) defined by

$l_{79}$ = 2,0 mm ± 0,1 mm

$l_{80}$ = 8,2 mm ± 0,2 mm

$l_{81}$ = 0,7 mm ± 0,2 mm

$a_6 = 30^{o} \pm 1^{o}$

The force required to unlock the lid lock shall not exceed 0,25 N in the direction shown in figure 18.

The force required to open the lid shall not exceed 1,0 N in the direction shown in figure 19.

### 8.14 Cartridge reel lock (figure 16)

The reels shall be locked when the cartridge is removed from the tape drive. This International Standard does not specify the design of the locking mechanism except that it shall be operated by a release pin in the drive.

The locking mechanism shall be accessed through a rectangular hole in the case (see figure 10) defined by the centreline from Plane Y

$l_{82}$ = 34,5 mm ± 0,1 mm;

the top from Plane X

$l_{83}$ = 35,85 mm ± 0,15 mm;

and

$l_{84}$ = 4,0 mm ± 0,1 mm

$l_{85}$ = 6,5 mm min.

© ISO/IEC 2001 – All rights reserved

Copyright International Organization for Standardization
Provided by IHS under license with ISO
No reproduction or networking permitted without license from IHS
Not for Resale

The dimension of the locking mechanism shall be defined by

$l_{86} = 3{,}2\ \text{mm}\ ^{+\ 0{,}3\ \text{mm}}_{-\ 0{,}2\ \text{mm}}$

$l_{87} = 4{,}0\ \text{mm} \pm 0{,}1\ \text{mm}$

$a_7 = 60{,}0^{\text{o}} \pm 1{,}0^{\text{o}}$

The reels shall be locked when the operating face of the release pin is located $l_{88}$ from Plane X.

$l_{88} = 39{,}0\ \text{mm}\ ^{+\ 2{,}0\ \text{mm}}_{-\ 0{,}0\ \text{mm}}$

The reels shall be unlocked when the operating face of the release pin is located $l_{89}$ from Plane X.

$l_{89} = 41{,}75\ \text{mm}\ ^{+\ 0{,}50\ \text{mm}}_{-\ 0{,}00\ \text{mm}}$

In this position there shall be a clearance of $l_{90}$ between the locking mechanism and the inside of the rear wall of the cartridge.

$l_{90} = 0{,}5$ mm min.

The pin used to move the locking mechanism shall penetrate the cartridge a distance of

$l_{91} = 7{,}8$ mm max.

The cavity of the locking mechanism shall be defined by

$l_{92} = 4{,}0\ \text{mm} \pm 0{,}1\ \text{mm}$

$r_4 = 0{,}3$ mm max.

The force required to unlock the reel lock in the direction shown in figure 17 shall not exceed 1,0 N.

### 8.15 Reel access holes (figure 10)

The case shall have two circular reel access holes that shall allow penetration of the drive spindles.

The positions of the access holes shall be defined by

$l_{93} = 23{,}00\ \text{mm} \pm 0{,}05\ \text{mm}$

$l_{94} = 11{,}40\ \text{mm} \pm 0{,}05\ \text{mm}$

$l_{95} = 46{,}2\ \text{mm} \pm 0{,}1\ \text{mm}$

The diameter of the holes shall be

$d_2 = 18{,}80\ \text{mm} \pm 0{,}05\ \text{mm}$

### 8.16 Interface between the reels and the drive spindles

The drive spindles (see figures 22 and 23) shall engage the reels in the area defined by

$l_{96} = 11{,}75\ \text{mm} \pm 0{,}15\ \text{mm}$

$l_{97} = 8{,}30\ \text{mm} \pm 0{,}05\ \text{mm}$

$l_{98} = 0{,}6\ \text{mm} \pm 0{,}1\ \text{mm}$

$l_{99} = 0{,}3\ \text{mm} \pm 0{,}1\ \text{mm}$

$l_{100} = 1{,}10\ \text{mm} \pm 0{,}05\ \text{mm}$

$l_{101} = 0{,}6$ mm max.

$l_{102} = 5{,}4\ \text{mm} \pm 0{,}1\ \text{mm}$

$l_{103} = 4{,}4\ \text{mm} \pm 0{,}1\ \text{mm}$


© ISO/IEC 2001 – All rights reserved
Copyright International Organization for Standardization
Provided by IHS under license with ISO
No reproduction or networking permitted without license from IHS
Not for Resale

$l_{104}$ = 0,6 mm max.

$d_4 = 10{,}00\ \text{mm}\ {}^{+\ 0{,}08\ \text{mm}}_{-\ 0{,}00\ \text{mm}}$

$d_5$ = 16,0 mm max.

$d_6 = 18{,}0\ \text{mm}\ {}^{+\ 0{,}0\ \text{mm}}_{-\ 0{,}1\ \text{mm}}$

$d_7 = 16{,}0\ \text{mm}\ {}^{+\ 0{,}0\ \text{mm}}_{-\ 0{,}1\ \text{mm}}$

$d_8 = 45{,}1\ \text{mm}\ {}^{+\ 0{,}0\ \text{mm}}_{-\ 0{,}5\ \text{mm}}$

$d_9 = 45{,}1\ \text{mm}\ {}^{+\ 0{,}0\ \text{mm}}_{-\ 0{,}2\ \text{mm}}$

There shall be a chamfer of the reel driving hole defined by

$l_{105}$ = 2,4 mm ± 0,1 mm

$a_9 = 15^{o} \pm 1^{o}$

There shall be a chamfer at the bottom of the reel on the outside edge defined by

$l_{106}$ = 0,2 mm max.

$a_8 = 45^{o} \pm 1^{o}$

The position and width of the slots to receive the reel drive spindle shall be defined by

$l_{107}$ = 2,4 mm ± 0,2 mm

$a_{10} = 60^{o} \pm 1^{o}$

The teeth in the reel driving hole shall have a radius

$r_5$ = 0,2 mm max.

The depth $l_{108}$ of the reel driving hole within diameter $d_3$ shall be

$l_{108}$ = 9,4 mm min.

$d_3 = 6{,}50\ \text{mm}\ {}^{+\ 0{,}08\ \text{mm}}_{-\ 0{,}00\ \text{mm}}$

When the tape is loaded in the drive, the position of the tape centre relative to Plane Z shall be

$l_{109}$ = 7,05 mm ± 0,10 mm

When the tape is loaded in the drive, the position of the reel relative to Plane Z shall be

$l_{110}$ = 0,6 mm ± 0,2 mm

The penetration of the reel drive spindle into the reel shall be defined by

$l_{111}$ = 7,5 mm max.

$l_{112}$ = 8,0 mm max.

$l_{113}$ = 1,20 mm ± 0,05 mm

$l_{114}$ = 1,40 mm ± 0,05 mm

$a_{11} = 60^{0} \pm 1^{o}$

© ISO/IEC 2001 – All rights reserved

Copyright International Organization for Standardization
Provided by IHS under license with ISO
No reproduction or networking permitted without license from IHS
Not for Resale

When the cartridge is mounted in the drive and the Support areas are at a distance $l_{110}$ from Plane Z, the reel spring force F shall be 0,6 N ± 0,2 N in the direction shown in figure 23.

### 8.17 Light path (figures 10, 12, 20 and 21)

A light path shall be provided for sensing the leader and trailer tapes. When the lid is open, an unobstructed light path shall exist from the $d_{10}$ diameter light path hole to the outside of the cartridge via square windows in the light path hole (see cross-section D-D in figure 12) and the light window in the cartridge lid.

The centre of the light path hole shall be defined by $l_{82}$ and

$l_{115}$ = 8,35 mm ± 0,10 mm

The diameter of the light path hole shall be

$d_{10} = 6{,}5\ \text{mm}\ {}^{+\ 0{,}3\ \text{mm}}_{-\ 0{,}0\ \text{mm}}$

The light path hole shall have a chamfer defined by

$l_{116}$ = 0,5 mm max.

$a_{12} = 45^{o} \pm 1^{o}$

The position and size of the square window on each side of the light path hole shall be

$l_{117}$ = 6,05 mm ± 0,10 mm

$l_{118}$ = 2,5 mm ± 0,4 mm

The hole shall be deep enough to allow penetration of a light emitter a distance of

$l_{119}$ = 12,5 mm min.

The angle of the light path shall be

$a_{13} = 5{,}50^{o} \pm 0{,}25^{o}$

The position and size of the cartridge lid window shall be

$l_{120}$ = 3,8 mm ± 0,1 mm

$l_{121}$ = 2,5 mm ± 0,4 mm

$l_{122}$ = 6,05 mm ± 0,10 mm

### 8.18 Position of the tape in the case (figure 21)

The tape shall run between two guide surfaces in a plane parallel to Plane X and $l_{123}$ from it.

$l_{123}$ = 13,15 mm ± 0,20 mm

The guide surfaces shall have a radius of $r_6$ and shall be tangential, as shown in figure 21, to lines tangential to the reel hubs that extend to points outside the case.

$r_6$ = 3,0 mm ± 0,1 mm

These points shall be defined by

$l_{124}$ = 76,28 mm ± 0,30 mm

$l_{125}$ = 27,25 mm ± 0,20 mm

$l_{126}$ = 31,15 mm ± 0,20 mm

$l_{127}$ = 9,67 mm ± 0,10 mm

### 8.19 Tape path zone

When the cartridge is inserted into the drive, the tape is pulled outside the case by tape guides and is no longer in contact with the guide surfaces. The tape path zone (see figure 21) of the case is the zone in which the tape shall be able to move freely. This zone shall be maintained for both sides of the case and shall be defined by $l_{124}$ to $l_{127}$ and


© ISO/IEC 2001 – All rights reserved
Copyright International Organization for Standardization
Provided by IHS under license with ISO
No reproduction or networking permitted without license from IHS
Not for Resale

$l_{128}$ = 23,0 mm ± 0,1 mm

$l_{129}$ = 0,3 mm min.

$l_{130}$ = 46,2 mm ± 0,2 mm

$l_{131}$ = 11,4 mm ± 0,1 mm

The clearance between the tape and the guides shall be defined by

$l_{132}$ = 0,3 mm min.

### 8.20 Tape access cavity (figure 10)

When the cartridge is inserted into the drive, tape guides in the drive pull the tape into the drive tape path. The two radii $r_7$ are centred on Datum holes A and B. The shape and dimensions of the access cavity for these tape guides shall be defined by $l_{63}$ and $l_{64}$, and the following

$r_7$ = 2,3 mm ± 0,1 mm

The two radii $r_8$ are centred on the centres of the reel access holes.

$r_8$ = 24,15 mm ± 0,10 mm

$l_{133}$ = 3,85 mm ± 0,10 mm

### 8.21 Tape access cavity clearance requirements (figure 24)

The case design shall provide clearance for drive tape threading mechanisms and shall be defined by

$l_{134}$ = 1,2 mm max.

$l_{135}$ = 1,15 mm $^{+\ 0,20\ \text{mm}}_{-\ 0,00\ \text{mm}}$

$l_{136}$ = 14,0 mm $^{+\ 0,0\ \text{mm}}_{-\ 0,2\ \text{mm}}$

$l_{137}$ = 66,8 mm min.

$l_{138}$ = 10,0 mm min.

$l_{139}$ = 14,8 mm ± 0,1 mm

$a_{14}$ = 49° max.

© ISO/IEC 2001 – All rights reserved

Copyright International Organization for Standardization
Provided by IHS under license with ISO
No reproduction or networking permitted without license from IHS
Not for Resale

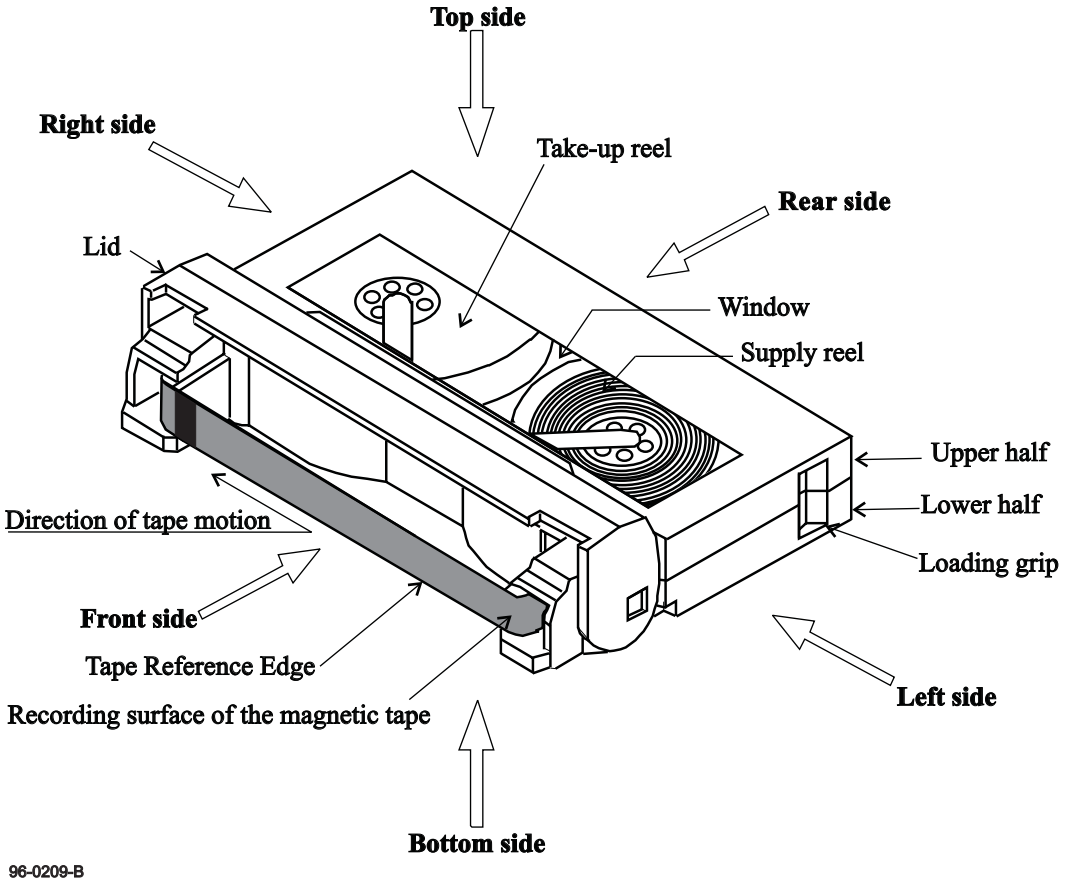


**Figure 1 - Tape cartridge assembly top view, lid opened**

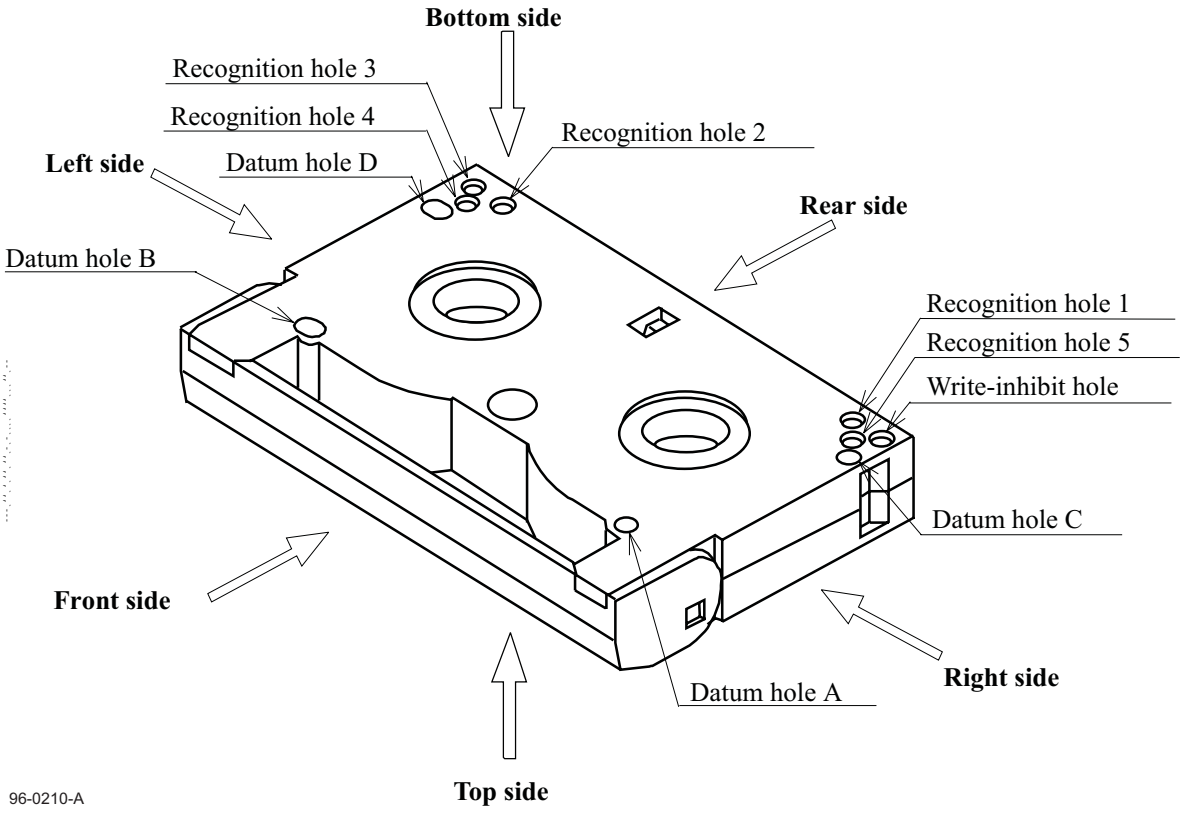


**Figure 2 - Tape cartridge assembly bottom view, lid closed**


© ISO/IEC 2001 – All rights reserved
Copyright International Organization for Standardization
Provided by IHS under license with ISO
No reproduction or networking permitted without license from IHS
Not for Resale

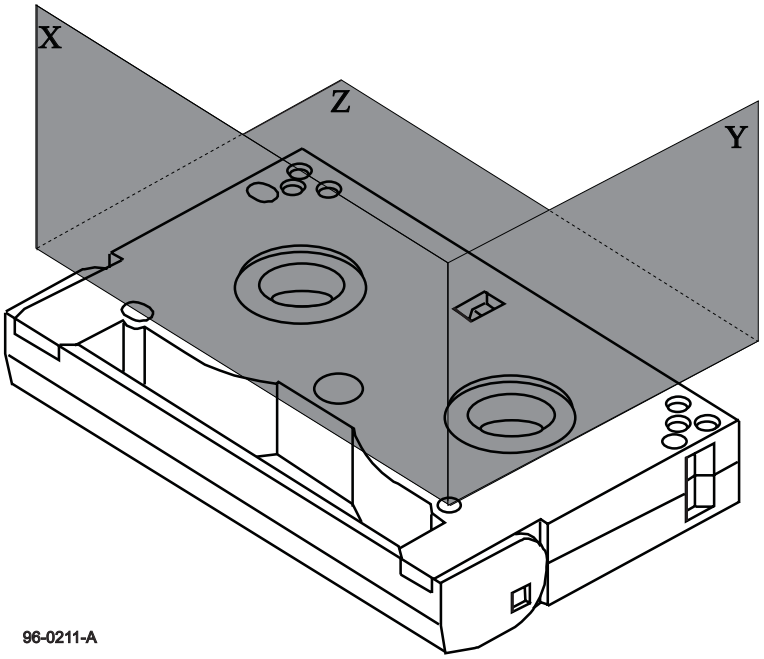


**Figure 3 - Reference Planes X, Y, and Z**

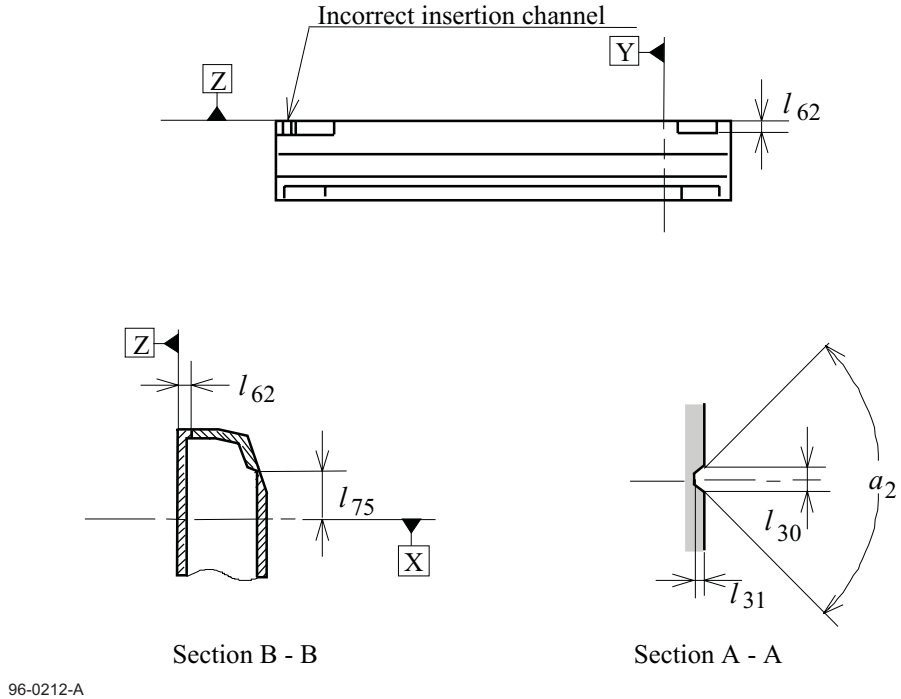


**Figure 4 - Front side, lid closed**

--`,,```,,,,````-`-`,,`,,`,`,,`---
© ISO/IEC 2001 - All rights reserved
Copyright International Organization for Standardization
Provided by IHS under license with ISO
No reproduction or networking permitted without license from IHS
Not for Resale

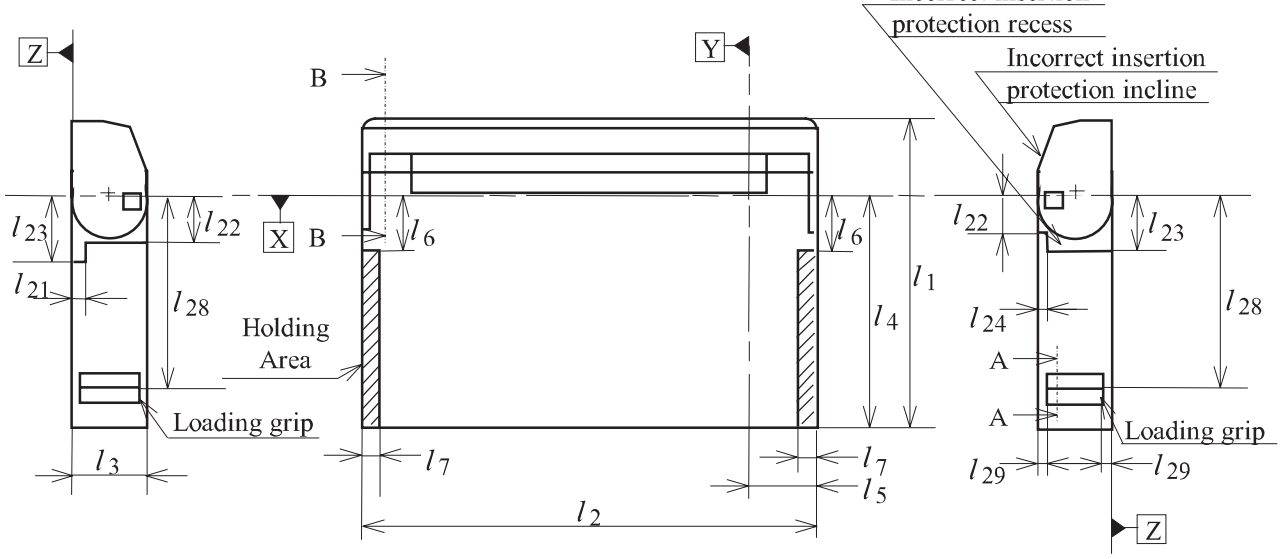


**Figure 5 - Left side, lid closed**

**Figure 6 - Top side, lid closed**

**Figure 7 - Right side, lid closed**

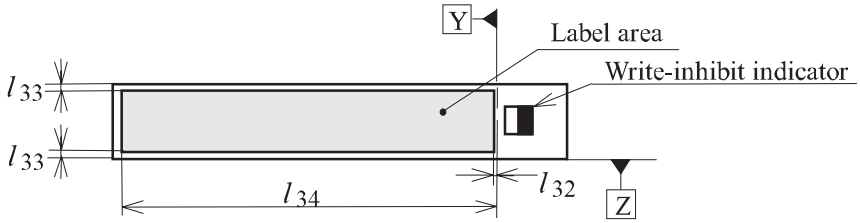


**Figure 8 - Rear side, lid closed**

96-0213-A



© ISO/IEC 2001 – All rights reserved
Copyright International Organization for Standardization
Provided by IHS under license with ISO
No reproduction or networking permitted without license from IHS
Not for Resale

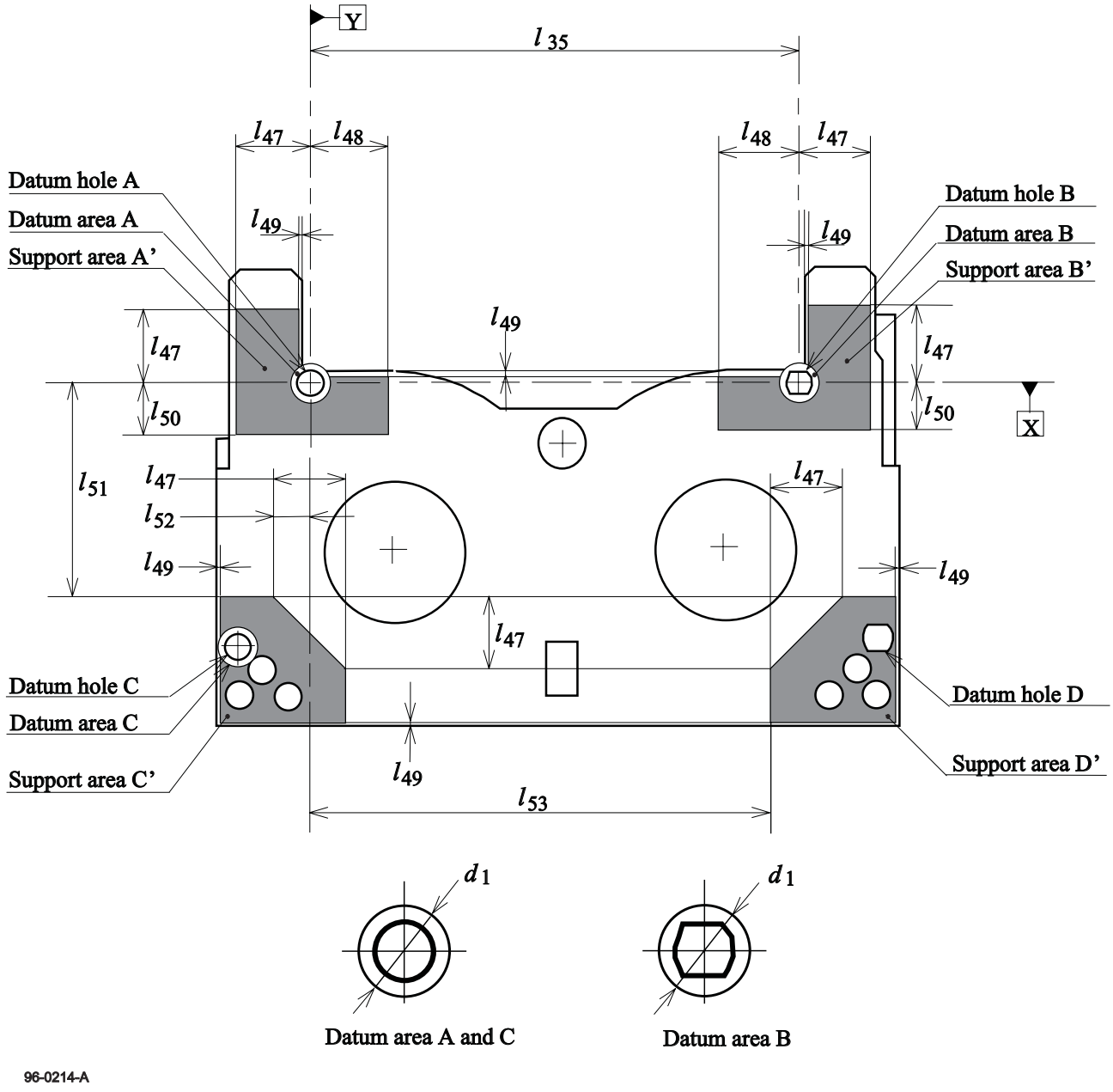


**Figure 9 - Bottom side, Datum and Support areas**

© ISO/IEC 2001 - All rights reserved

Copyright International Organization for Standardization
Provided by IHS under license with ISO
No reproduction or networking permitted without license from IHS
Not for Resale

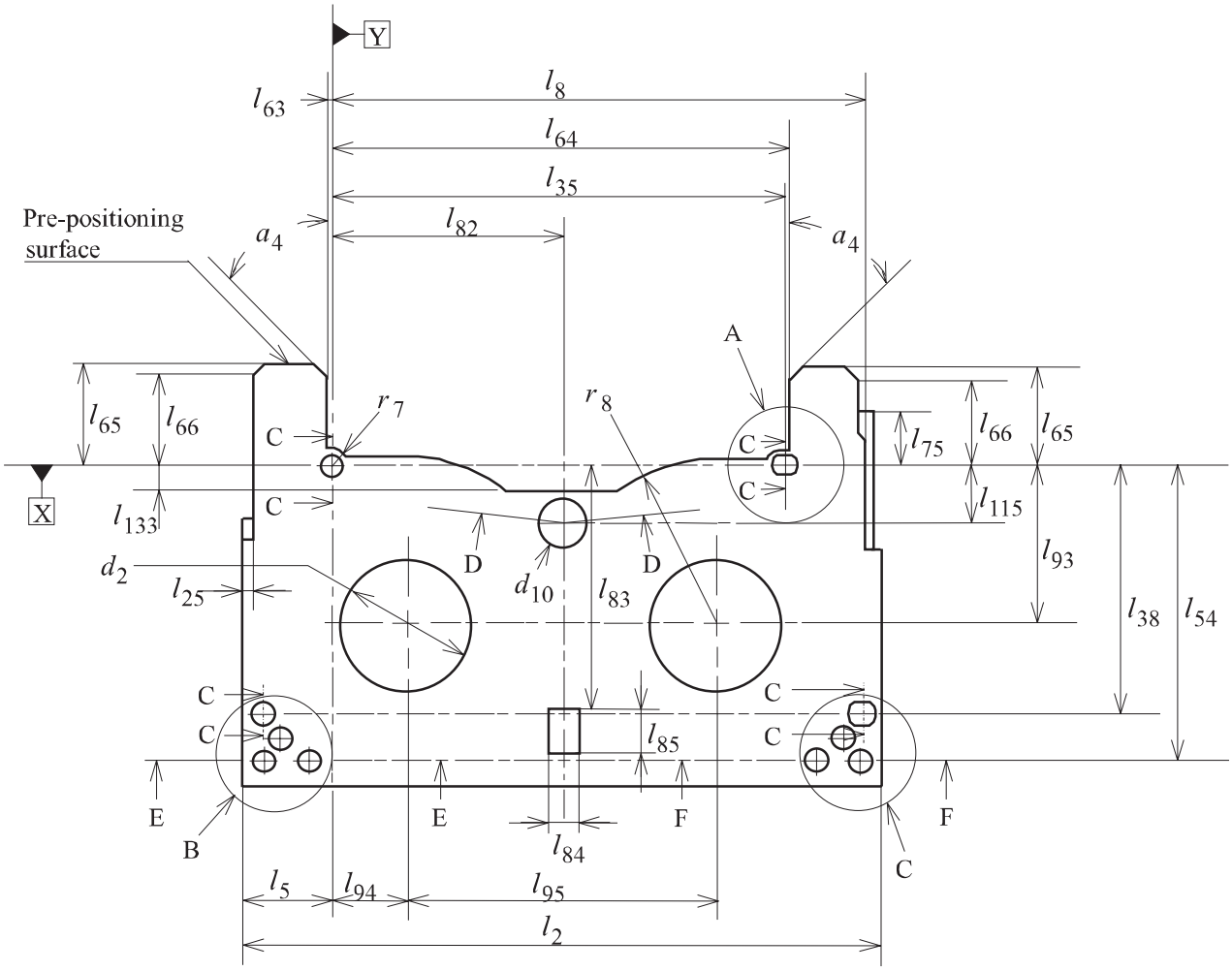


96-0215-A

**Figure 10 - Bottom side, lid removed**



© ISO/IEC 2001 – All rights reserved
Copyright International Organization for Standardization
Provided by IHS under license with ISO
No reproduction or networking permitted without license from IHS
Not for Resale

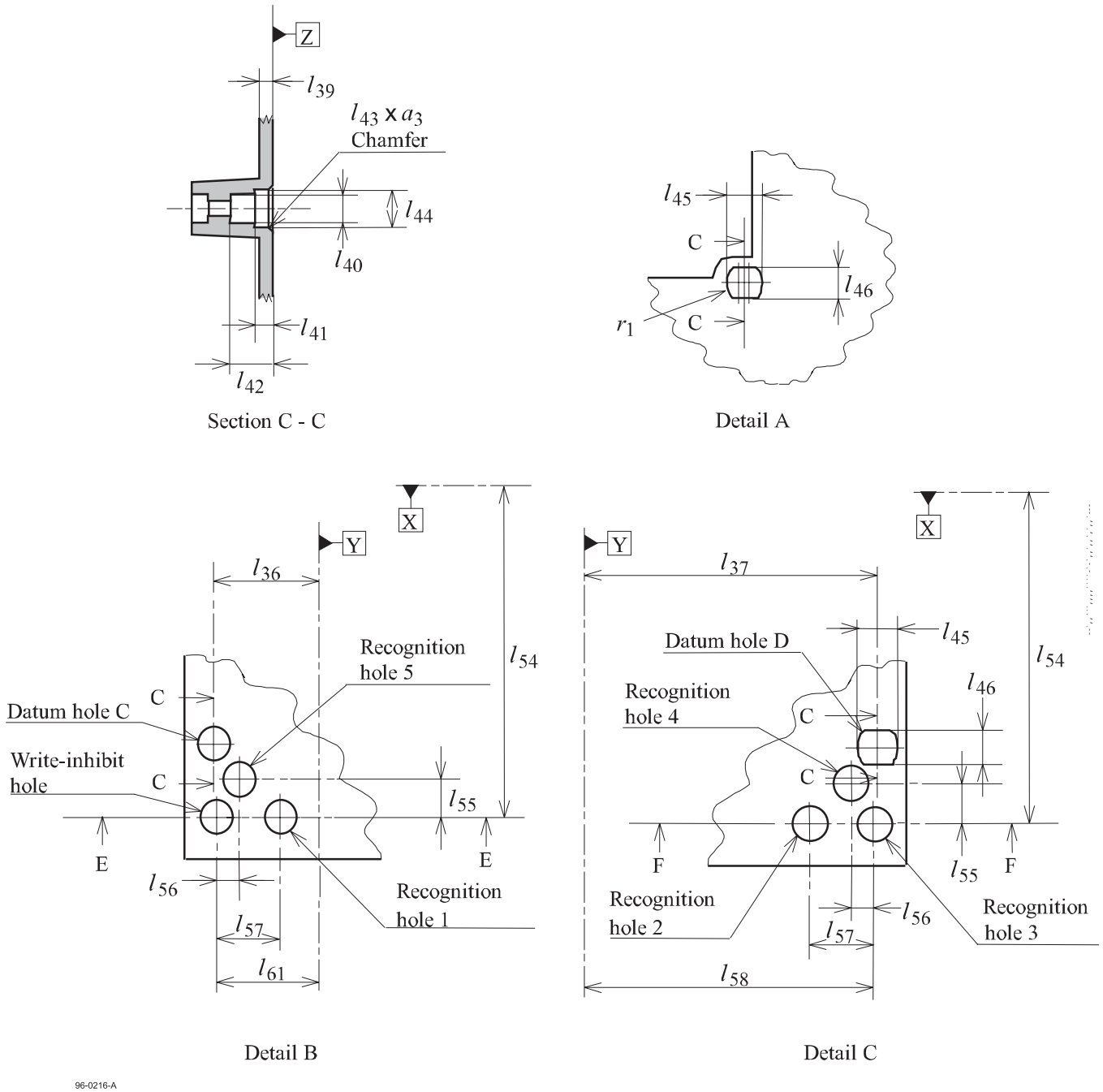


**Figure 11 - Details of datum and recognition holes**

© ISO/IEC 2001 - All rights reserved

Copyright International Organization for Standardization
Provided by IHS under license with ISO
No reproduction or networking permitted without license from IHS
Not for Resale

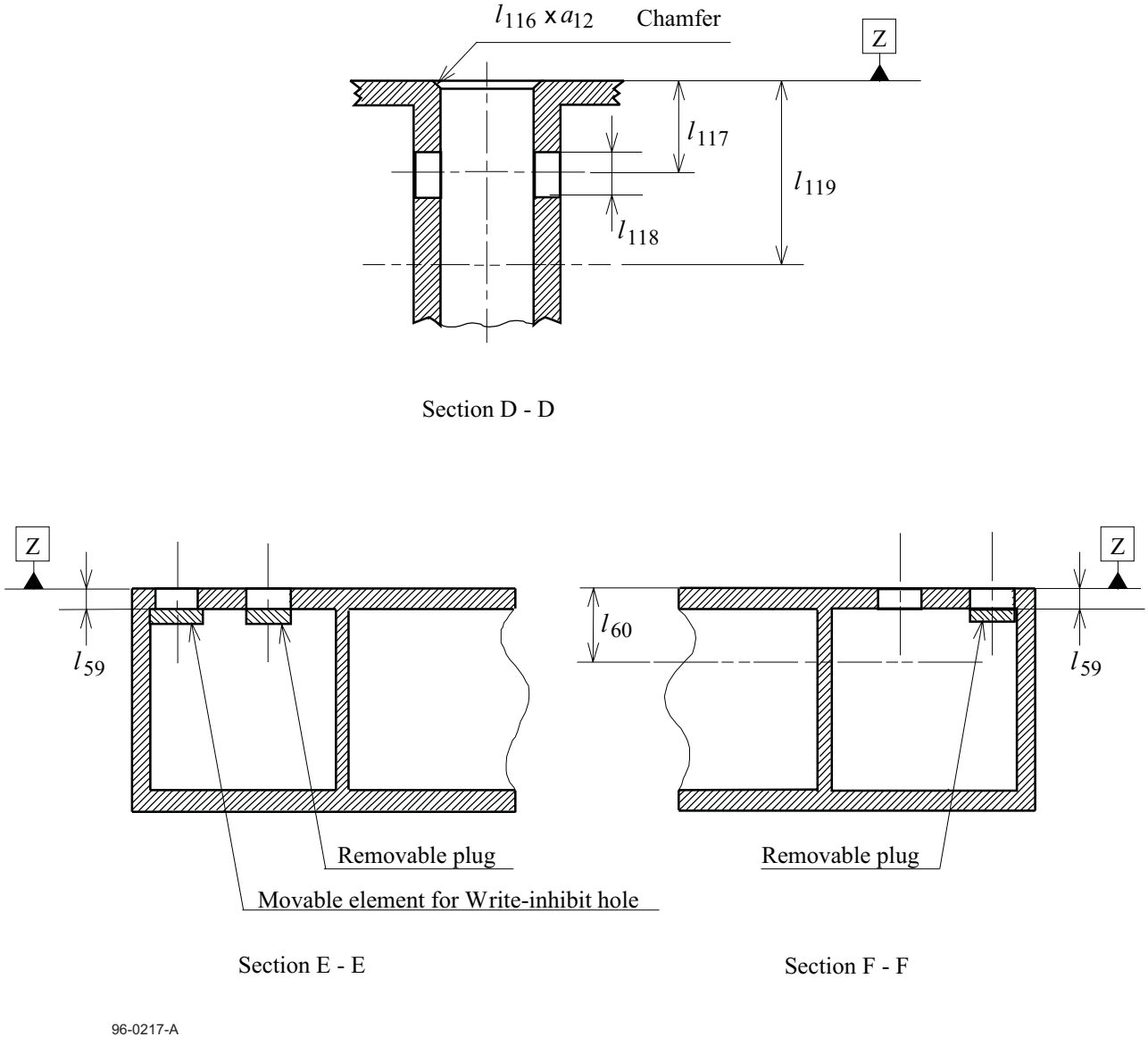


**Figure 12 - Cross-sections of light path holes, recognition holes and write-inhibit hole**



--`,,```,,,,````-`-`,,`,,`,`,,`---
© ISO/IEC 2001 – All rights reserved
Copyright International Organization for Standardization
Provided by IHS under license with ISO
No reproduction or networking permitted without license from IHS
Not for Resale

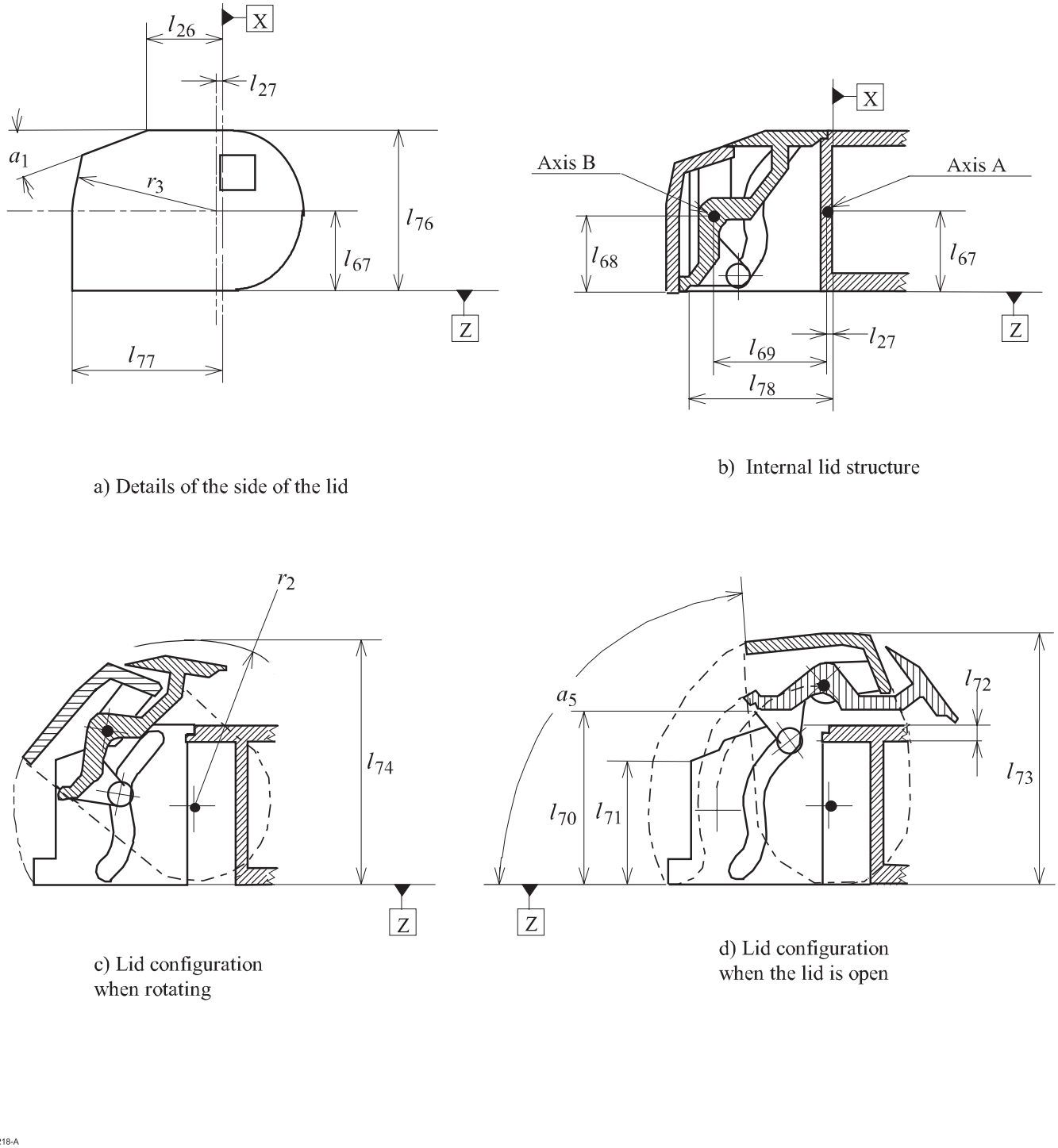


a) Details of the side of the lid

b) Internal lid structure

c) Lid configuration when rotating

d) Lid configuration when the lid is open

96-0218-A

**Figure 13 - Lid**

© ISO/IEC 2001 - All rights reserved

Copyright International Organization for Standardization
Provided by IHS under license with ISO
No reproduction or networking permitted without license from IHS
Not for Resale

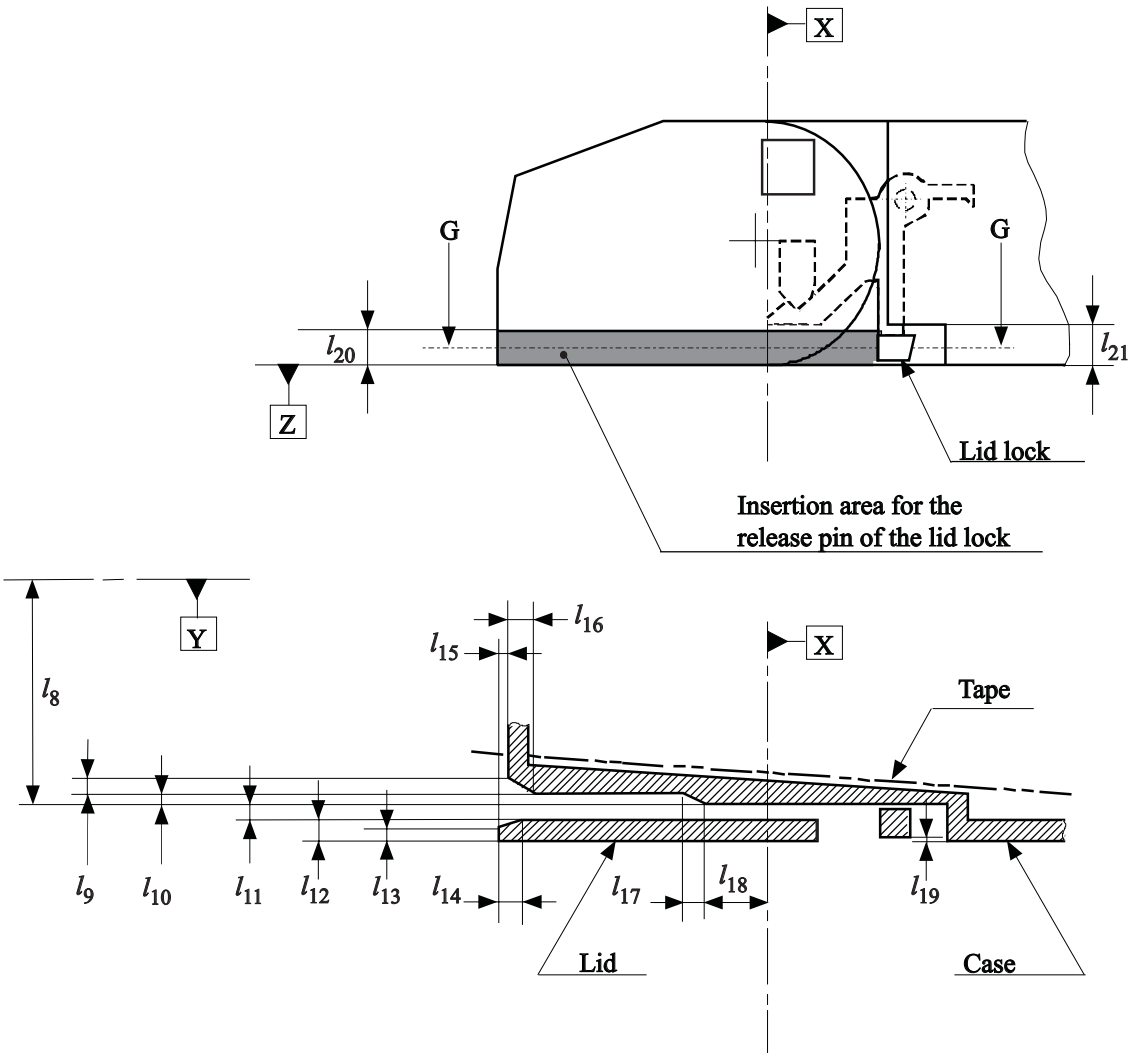


**Figure 14 - Lid release insertion channel**

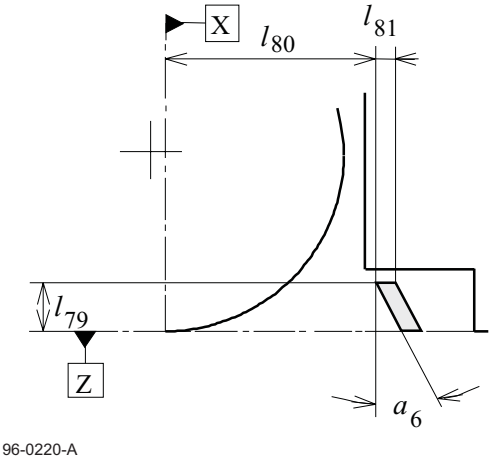


**Figure 15 - Lid release requirement**



© ISO/IEC 2001 – All rights reserved
Copyright International Organization for Standardization
Provided by IHS under license with ISO
No reproduction or networking permitted without license from IHS
Not for Resale

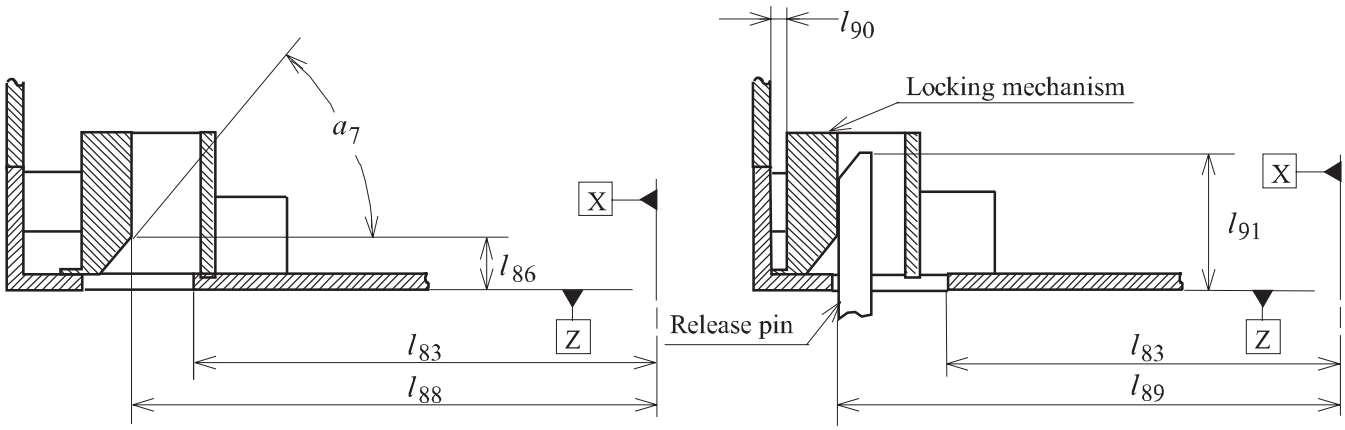


Reel lock in locked position

Reel lock in released position

Section L - L of figure 21

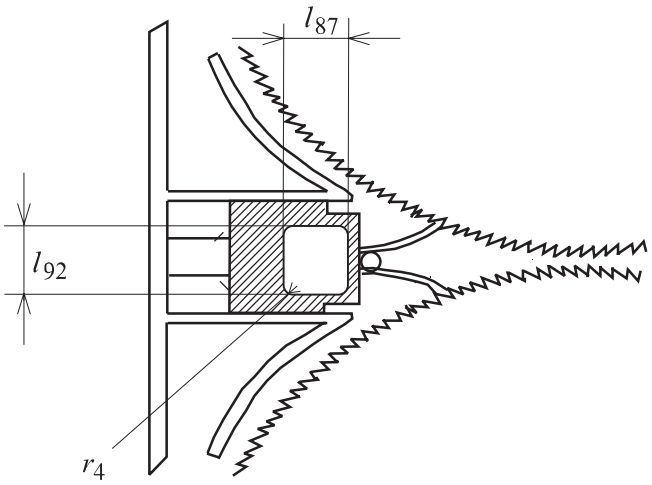


Detail E of figure 21

96-0221-A

**Figure 16 - Reel lock and release**

© ISO/IEC 2001 - All rights reserved



Copyright International Organization for Standardization
Provided by IHS under license with ISO
No reproduction or networking permitted without license from IHS
Not for Resale

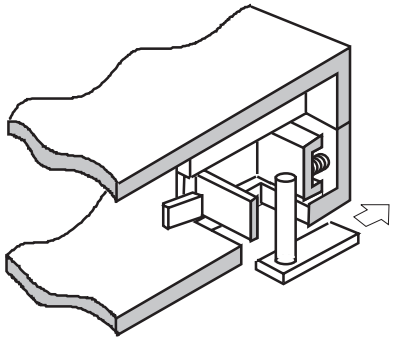

96-0222-A

**Figure 17 - Direction of force needed to unlock the reel lock**

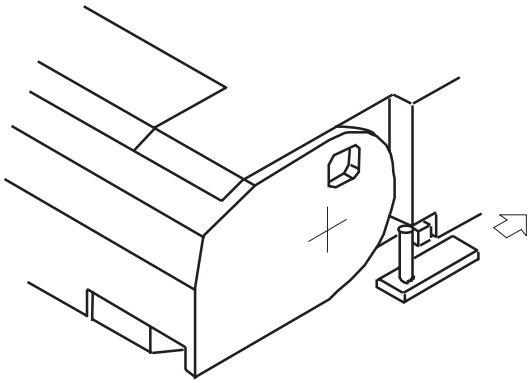

96-0223-A

**Figure 18 - Direction of force needed to unlock the lid lock**

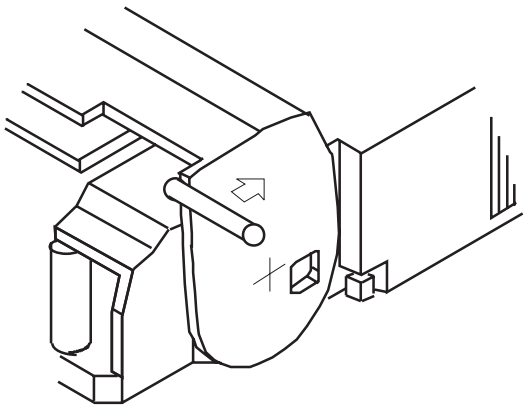

96-0224-A

**Figure 19 - Direction of force needed to open the lid**



© ISO/IEC 2001 – All rights reserved
Copyright International Organization for Standardization
Provided by IHS under license with ISO
No reproduction or networking permitted without license from IHS
Not for Resale

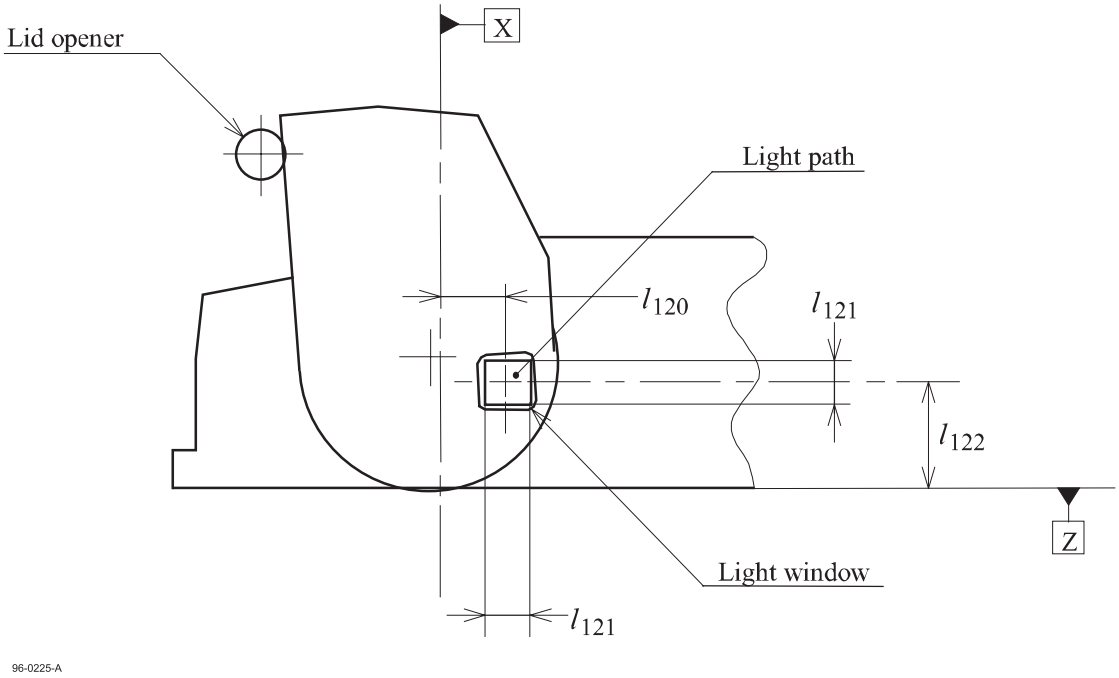


**Figure 20 - Light path and light window**

© ISO/IEC 2001 - All rights reserved

Copyright International Organization for Standardization
Provided by IHS under license with ISO
No reproduction or networking permitted without license from IHS
Not for Resale

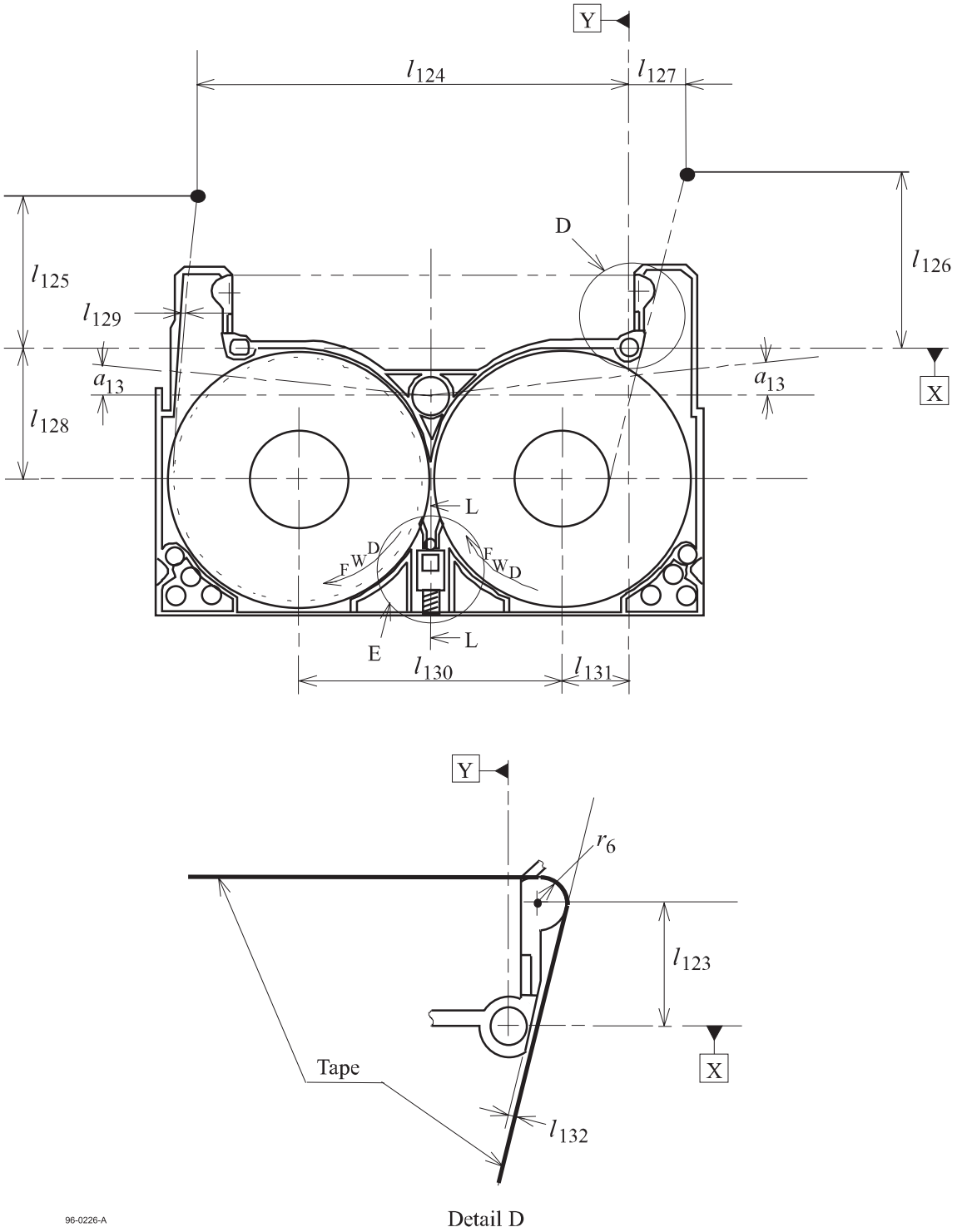


**Figure 21 - Internal tape path and light path**



Copyright International Organization for Standardization
Provided by IHS under license with ISO
No reproduction or networking permitted without license from IHS
Not for Resale
© ISO/IEC 2001 – All rights reserved

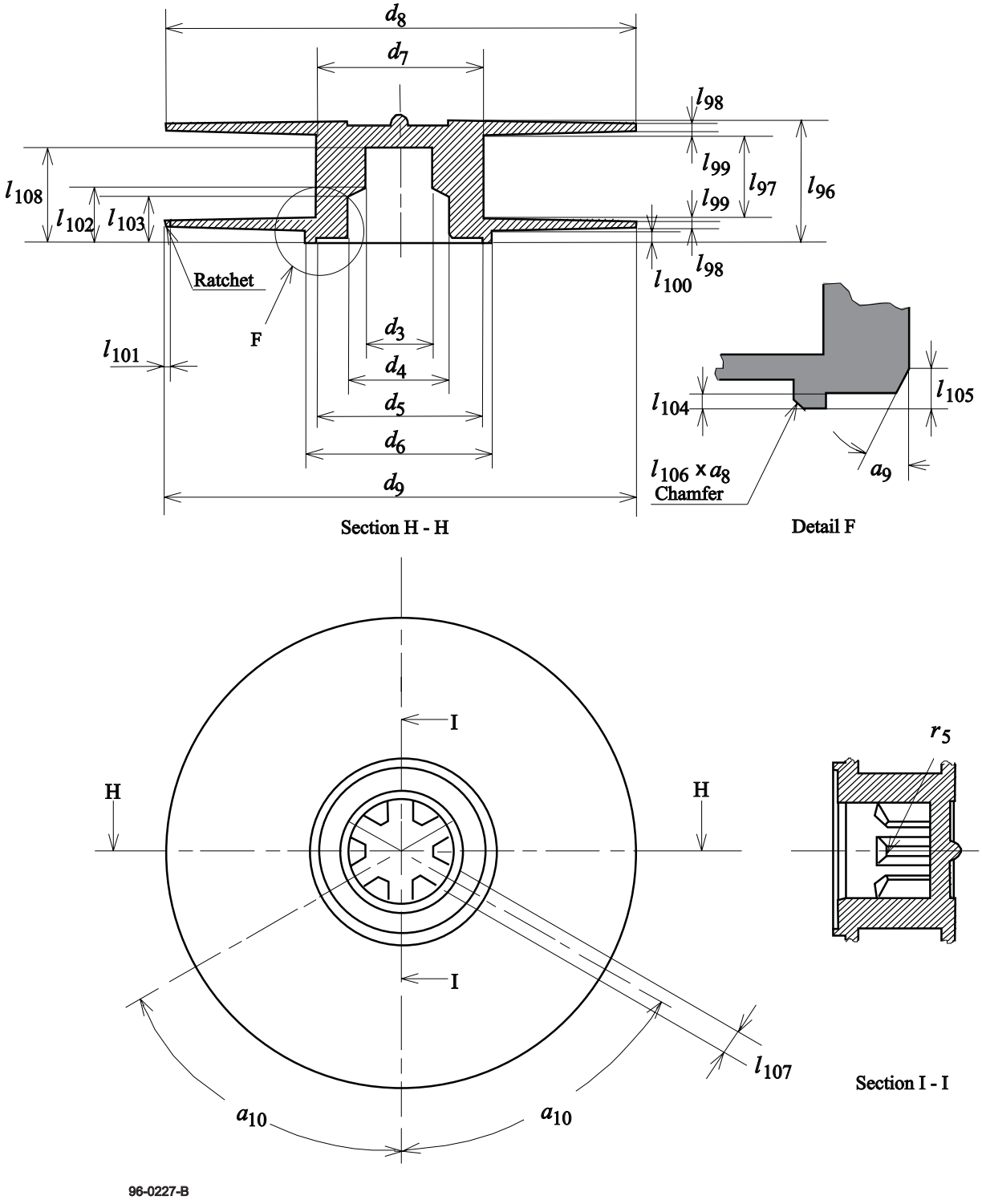


**Figure 22 - Cartridge reel**

© ISO/IEC 2001 - All rights reserved

Copyright International Organization for Standardization
Provided by IHS under license with ISO
No reproduction or networking permitted without license from IHS
Not for Resale

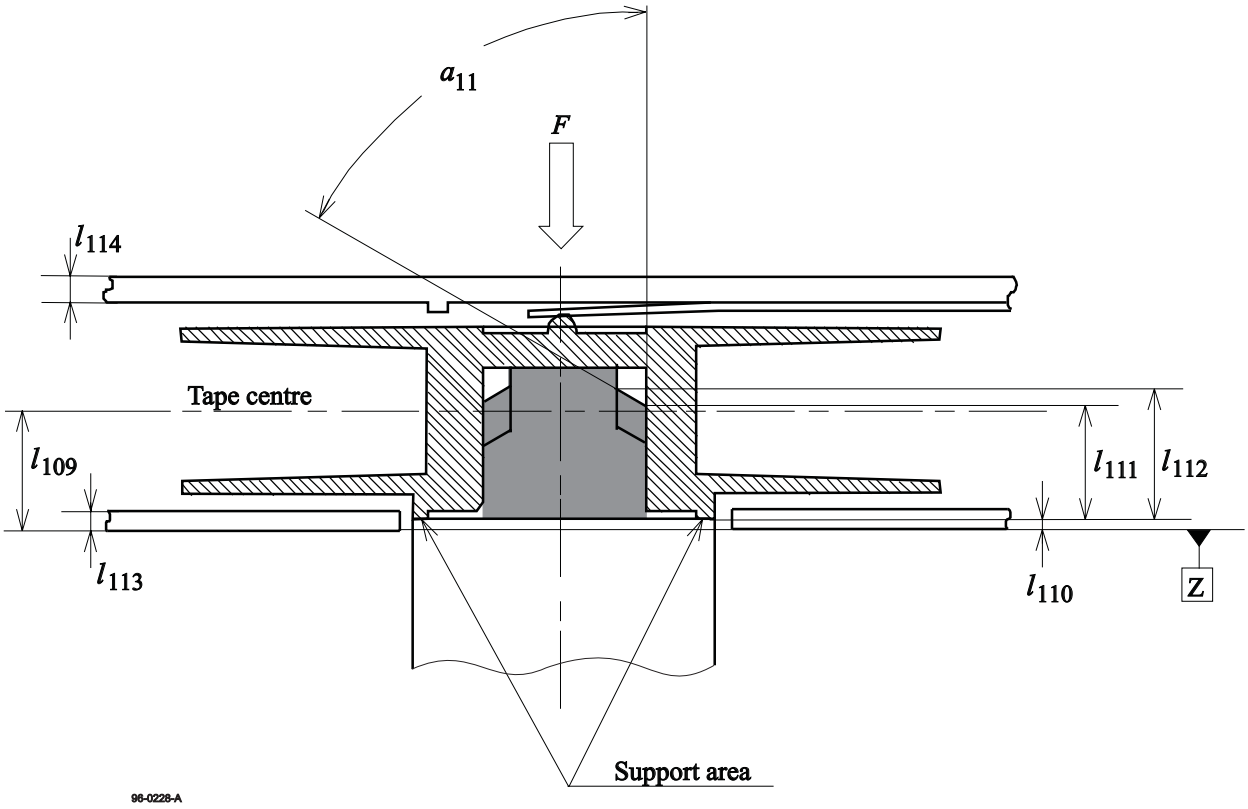


**Figure 23 - Interface with drive spindle**



© ISO/IEC 2001 – All rights reserved
Copyright International Organization for Standardization
Provided by IHS under license with ISO
No reproduction or networking permitted without license from IHS
Not for Resale

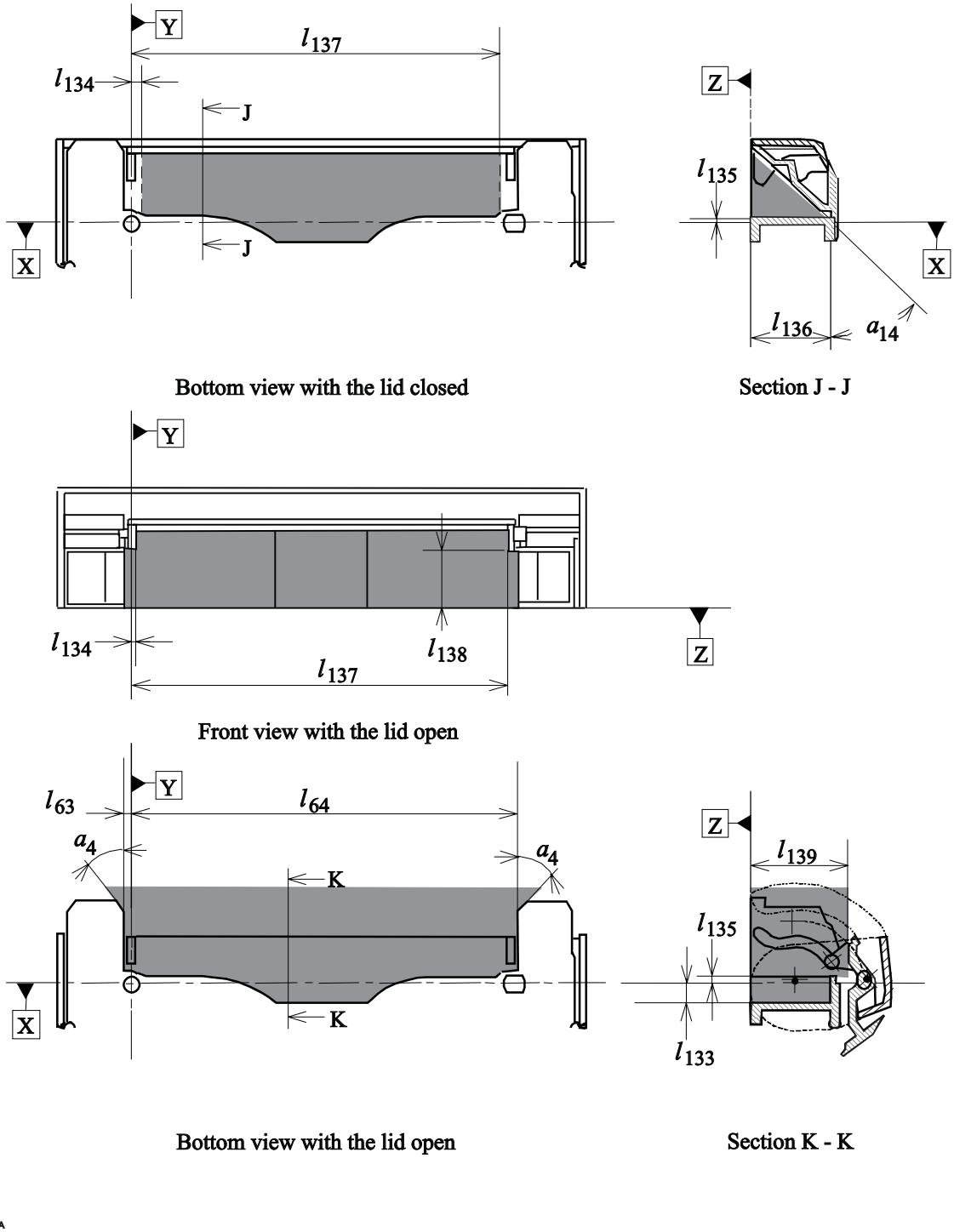


**Figure 24 - Tape access cavity clearance**

© ISO/IEC 2001 - All rights reserved
Copyright International Organization for Standardization
Provided by IHS under license with ISO
No reproduction or networking permitted without license from IHS
Not for Resale

## Section 3 - Requirements for the Unrecorded Tape

# 9 Mechanical, physical and dimensional characteristics of the tape

## 9.1 Materials

The tape contained within the case shall consist of a leader tape, cleaning tape, magnetic tape and trailer tape as shown in figure 25.

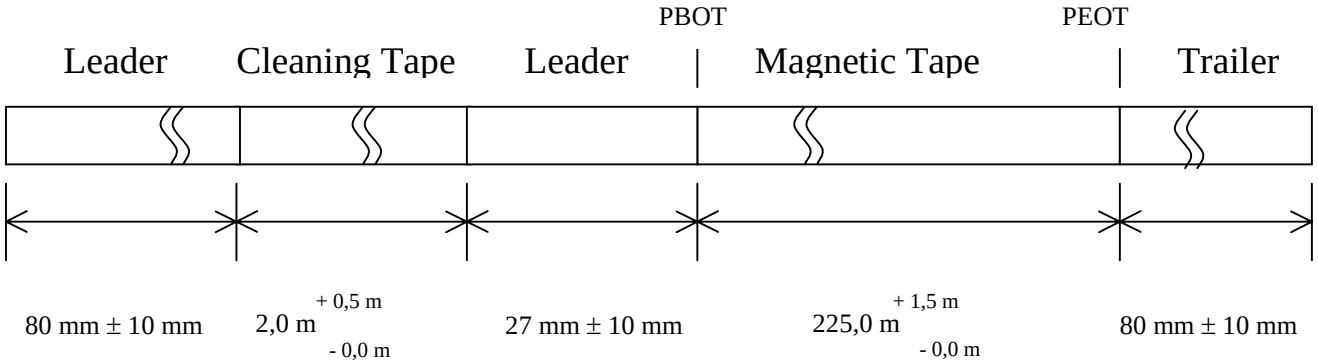


**Figure 25 – Tape configuration**

The base material of the recordable area of the tape shall be polyethylene naphthalate (or equivalent) coated on one side with a strong yet flexible ferromagnetic layer of evaporated metal material (or equivalent). The back surface may be coated.

The base material of the cleaning tape shall be polyethylene terephthalate (or equivalent) coated on one side with a abrasive particulate layer (see 9.15). The back surface may be coated.

There shall be a leader tape between the take-up hub and cleaning tape. There shall be a trailer tape between PEOT and the supply hub. The leader and trailer tapes shall consist of a translucent length of the same base material (or equivalent) without the ferromagnetic coating or the back coating.

The leader and trailer tapes shall each be attached to the magnetic tape by means of a length of splicing tape that extends over each such joint. The splicing tape shall consist of polyethylene terephthalate (or equivalent) coated on one side with an acrylic (or equivalent) adhesive material

## 9.2 Tape length

### 9.2.1 Length of the magnetic tape

The length of tape between PBOT and PEOT shall be in the range 225,0 m to 226,5 m.

### 9.2.2 Length of leader and trailer tapes

The length of the leader and trailer tapes shall be in the range 70 mm to 90 mm. There shall be a leader tape between the cleaning tape and the magnetic tape with a length in the range of 17 mm to 37 mm. The joints between the leader and trailer tapes and the magnetic tape or cleaning tape shall be perpendicular to the Tape Reference Edge within 1°.

### 9.2.3 Length of the cleaning tape

The length of the cleaning tape shall be in the range of 2,0 m to 2,5 m. The joints between the cleaning tape and the leader tape and the cleaning tape and the magnetic tape shall be perpendicular to the Tape Reference Edge within 1°.

### 9.2.4 Length of the splicing tape

The splicing tape shall have a length of 13 mm max. It shall extend for a distance of 6,5 mm ± 1,5 mm over the leader and trailer tapes.

## 9.3 Width

### 9.3.1 Width of magnetic, cleaning, leader and trailer tape

The width of the magnetic tape and cleaning tape shall be 8,00 mm ± 0,01 mm. The difference between the largest and smallest width shall not exceed 6 µm.


© ISO/IEC 2001 – All rights reserved
Copyright International Organization for Standardization
Provided by IHS under license with ISO
No reproduction or networking permitted without license from IHS
Not for Resale

The width of the leader tape, trailer tape and splice tape shall be 8,00 mm ± 0,02 mm.

**Procedure**

1) Cover a section of the tape with a glass microscope slide.

2) Measure the width across the tape from edge to edge with no tension applied to the tape using a calibrated microscope, profile projector, or equivalent having an accuracy of at least 0,5 µm.

3) Repeat the measurement to obtain tape widths at a minimum of five equally spaced positions along a tape length of 1,0 m min.

The tape width is the average of the widths measured.

### 9.3.2 Width and position of the splicing tape

The width of the splicing tape and its position across the width of the leader, trailer and magnetic tapes shall be such that the bottom edge of the splicing tape shall be no more than 0,60 mm from the bottom edges of the other tapes and the top edge of the splicing tape shall be no more than 0,60 mm from their top edges. Neither edge of the splicing tape shall extend beyond the edges of the leader, trailer and magnetic tapes.

### 9.3.3 Edge weave

The edge weave is the mean deviation of the Tape Reference Edge from the mean edge position that is calculated over a sample length of 50 mm. The edge weave shall not exceed 6 µm.

1. Procedure
2. Place a 450 mm sample under a tension of 0,050 N ± 0,005 N.
3. Using a calibrated edge position sensor (see figure 26), with an accuracy of 0,5 µm or better, take 1001 measurements at 0,25 mm intervals along 250 mm of the Tape Reference Edge of the sample.
4. Using measurements 1 through 201, calculate the mean Tape Reference Edge position for that 50 mm interval using linear regression analysis (see figure 27).
5. Determine the maximum deviation from the mean Tape Reference Edge within these 201 measurements (see figure 27).
6. Repeat steps 3 and 4 for the next set of measurements 2 to 202, and successively for all sets from 3 to 203 up to 800 to 1001.
7. The edge weave is the average value of the 800 maximum deviations found over the 800 measurement sets.

--`,,```,,,,````-`-`,,`,,`,`,,`---

© ISO/IEC 2001 – All rights reserved

Copyright International Organization for Standardization
Provided by IHS under license with ISO
No reproduction or networking permitted without license from IHS
Not for Resale

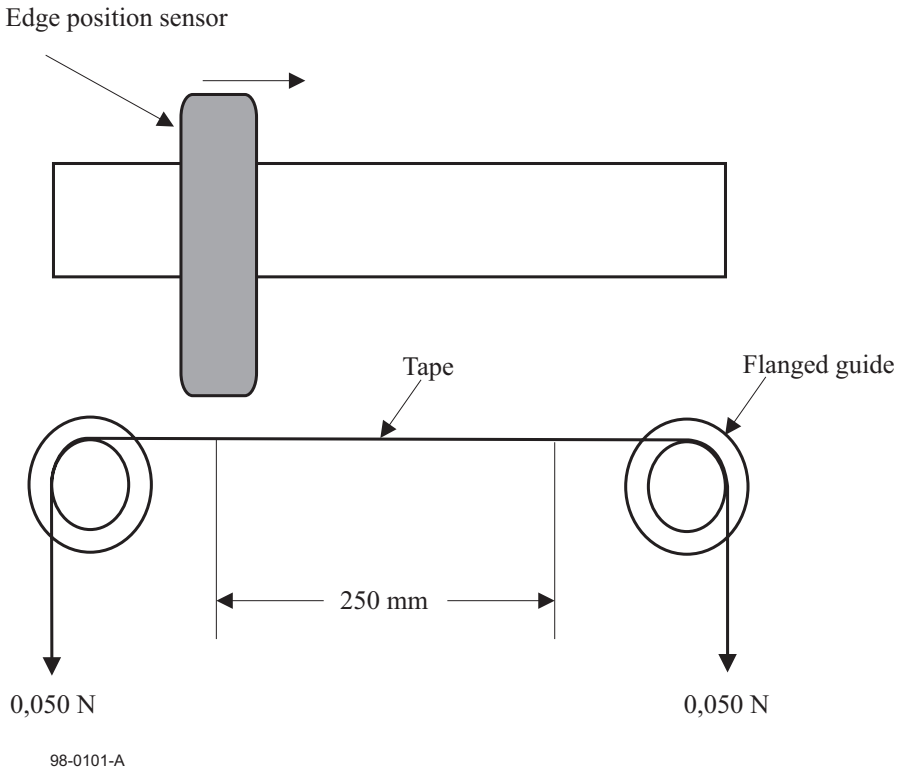


**Figure 26 - Measurement of edge weave**

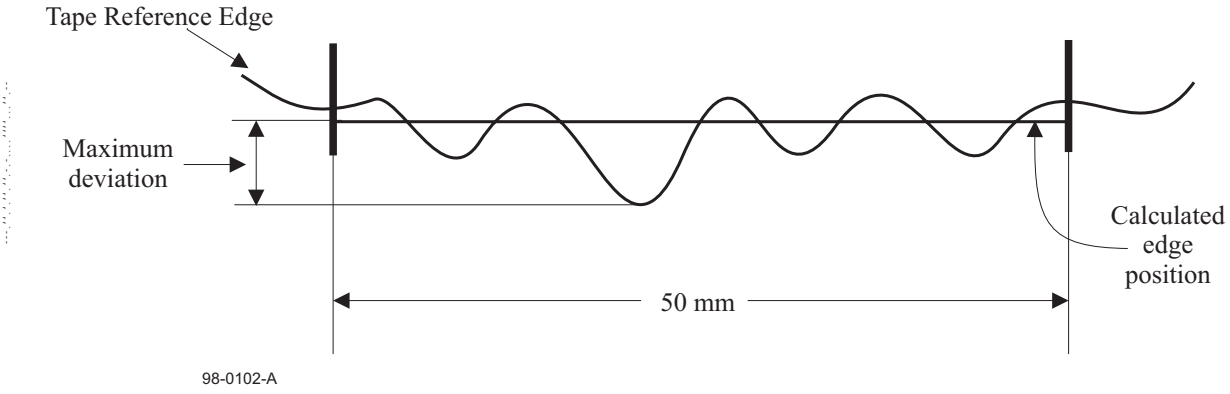


**Figure 27 - Edge weave**

## 9.4 Discontinuities

There shall be no discontinuities in the tape between PBOT and PEOT, such as those produced by tape splicing or perforations.

## 9.5 Thickness

### 9.5.1 Thickness of the magnetic tape

The thickness of the magnetic tape at any point shall be between 4,9 µm and 5,5 µm.

### 9.5.2 Thickness of the cleaning tape

The thickness of the cleaning tape at any point shall be between 8,5 µm and 9,5 µm.

### 9.5.3 Thickness of leader and trailer tape

The thickness of the leader and trailer tape at any point shall be between 9 µm and 17 µm.


© ISO/IEC 2001 – All rights reserved
Copyright International Organization for Standardization
Provided by IHS under license with ISO
No reproduction or networking permitted without license from IHS
Not for Resale

#### 9.5.4 Thickness of the splice tape

The thickness of the splice tape at any point shall be 20 µm max.

### 9.6 Longitudinal curvature

The radius of curvature of the edge of the tape shall not be less than 33 m.

**Procedure**

1. Allow a 1,0 m length of tape to unroll and assume its natural curvature on a flat smooth surface.
2. Measure the deviation from a 1,0 m chord.
3. The deviation shall not be greater than 3,8 mm.

This deviation corresponds to the minimum radius of curvature of 33 m if measured over an arc of a circle.

### 9.7 Cupping

The departure of the tape from a plane established by the edges of the tape shall not exceed 0,9 mm.

**Procedure**

1. Cut a 150 mm ± 10 mm length of tape.
2. Condition it for a minimum of 3 h min. in the test environment by hanging it so that the coated surface is freely exposed to the test environment.
3. Lay the tape across two cylindrical guides that are placed horizontally with the centres 35 mm apart.
4. Attach a 0,3 g weight to each end of the tape.
5. Measure the distance between the plane established by the edges of the tape and the maximum deviation from the plane.

### 9.8 Coating adhesion

The force required to peel any part of the coating from the tape base material shall not be less than 0,10 N.

**Procedure**

1. Take a test piece of the tape approximately 380 mm long and scribe a line through the coating across the width of the tape 125 mm from one end.
2. Using a double-sided pressure sensitive tape, attach the test piece to a smooth metal plate, with the coated surface facing the plate, as shown in figure 28.
3. Fold the test piece over 180$^{o}$ adjacent to and parallel with the scribed line. Attach the metal plate and the free end of the test piece to the jaws of a universal testing machine such that when the jaws are separated the tape is peeled. Set the jaw separation rate to 254 mm/minute.
4. Note the force at which any part of the coating first separates from the base material. If this is less than 0,10 N, the tape has failed the test. If the test piece peels away from the double-sided pressure sensitive tape before the force exceeds 0,10 N, an alternative type of double-sided pressure tape shall be used.

If the back surface of the tape is coated, repeat the procedure for the back coating.

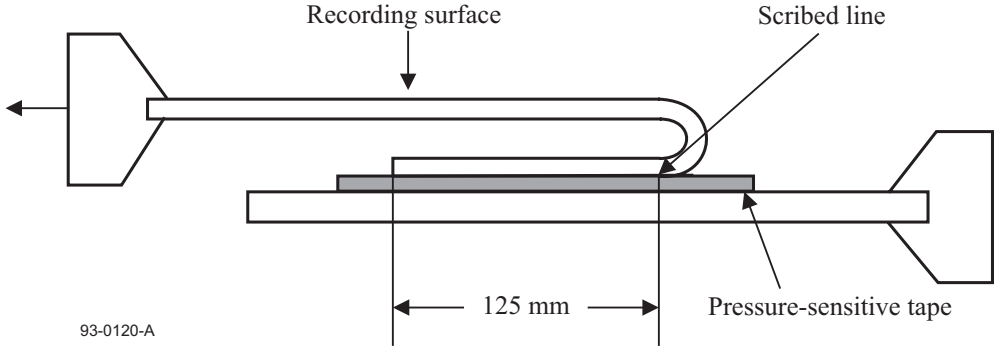


**Figure 28 - Measurement of the coating adhesion**

© ISO/IEC 2001 – All rights reserved

Copyright International Organization for Standardization
Provided by IHS under license with ISO
No reproduction or networking permitted without license from IHS
Not for Resale

## 9.9 Layer-to-layer adhesion

There shall be no tendency for the test piece to stick or the coating to peel.

**Procedure**

1. Attach one end of a test piece of magnetic tape of 1,0 m in length to the surface of a glass tube of 36 mm in diameter.
2. Wind the tape onto the tube at a tension of 1,1 N.
3. Store the wound test piece in a temperature of 45 °C ± 3 °C and a relative humidity of 80 % for 4 h.
4. Store for a further 24 h in the testing environment.
5. Apply a force of 0,1 N to the free end of the test piece and allow it to unwind slowly.

## 9.10 Tensile strength

Measurements shall be made in accordance with ISO 527-3. The length of the test piece shall be 200 mm. The length of the leader tape test piece shall be 50 mm. The length of the trailer tape test piece shall be 50 mm. The rate of elongation for all tensile tests shall be 100 mm/minute.

### 9.10.1 Breaking strength

Load the test piece until the breaking point of the test piece is reached. The force required to reach that point is the breaking strength of the tape.

The breaking strength shall be 8 N min.

### 9.10.2 Yield strength

The yield strength is the force necessary to produce a 5 % elongation of the tape.

The yield strength shall be 4 N min.

## 9.11 Residual elongation

The residual elongation, stated in per cent of the original tape length, shall be less than 0,04 %.

**Procedure**

1. Measure the initial length of a test piece of 1,0 m with a maximum applied force of 0,20 N.
2. Apply an additional force per total cross-sectional area of 20,5 N/mm$^2$ for a period of 10 minutes.
3. Remove the additional force and measure the length after ten minutes.

## 9.12 Electrical resistance of the recording surface

The electrical resistance of any square area of the recording surface shall be $10^3$ Ω max.

**Procedure**

1. Condition a test piece of tape in the test environment for 24 h.
2. Position the test piece over two 24-carat gold-plated, semicircular electrodes having a radius $r$ = 10 mm and a finish of at least N4, so that the recording surface is in contact with each electrode. These electrodes shall be placed parallel to the ground and parallel to each other at a distance $d$ = 8 mm between their centres. See figure 29.
3. Apply the force necessary to produce a tension of 5 N/mm$^2$ to each end of the test piece.
4. Apply a d.c. voltage of 7 V ± 1 V across the electrodes and measure the resulting current flow. From this value, determine the electrical resistance.

Repeat for a total of five positions along the test piece and average the five resistance readings.

When mounting the test piece, ensure that no conducting paths exist between the electrodes except that through the coating under test.

Note - Particular attention should be given to keeping the surfaces clean.

--`,,```,,,,````-`-`,,`,,`,`,,`---



© ISO/IEC 2001 – All rights reserved
Copyright International Organization for Standardization
Provided by IHS under license with ISO
No reproduction or networking permitted without license from IHS
Not for Resale

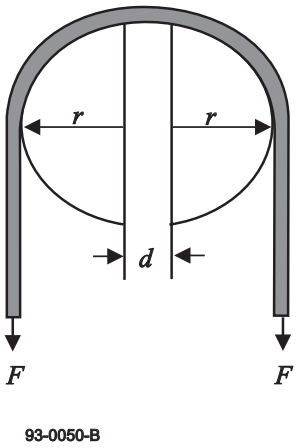


**Figure 29 - Measurement of electrical resistance**

### 9.13 Tape winding

The magnetic recording surface of the tape shall face outward from the cartridge and reels.

### 9.14 Light transmittance of tape

The light transmittance of the magnetic tape and cleaning tape shall be 5 % max.

The light transmittance of the leader and trailer tapes shall be 60 % min.

The method for measuring light transmittance is given in annex A.

### 9.15 Abrasivity

Tape abrasivity is the property of a tape to wear the tape transport. Abrasivity shall be measured according to annex B. For the magnetic tape, the length of the wear pattern on the wear bar shall be undetectable (see B.3). For the cleaning tape, the length of the wear pattern on the wear bar shall be 8 µm ± 1 µm.

## 10 Magnetic recording characteristics

The magnetic recording characteristics shall be defined by the testing requirements given below.

When performing these tests, the output or resultant signal shall be measured on a read-while-write pass for both a tape calibrated to the Master Standard Reference Tape and the tape under test, on the same equipment.

The following conditions shall apply to the testing of all magnetic recording characteristics, unless otherwise stated.

The positive azimuth tracks shall be used.

### 10.1 Test conditions

The following conditions shall apply to all tests of magnetic recording performance in clause 10, unless otherwise stated.

| | |
|---|---|
| tape condition: | a.c. erased to 2 % or less of the Average Signal Amplitude recorded at 3 704 ftpmm |
| head/tape speed: | 14,627 5 m/s ± 0,043 9 m/s |
| tape tension: | 0,10 N ± 0,02 N measured at the input to the scanner |
| track width: | 9,91 µm ± 1,00 µm |
| write gap length: | 0,27 µm ± 0,02 µm |
| read gap length: | 0,16 µm ± 0,02 µm |
| gap azimuth: | 20,009° ± 0,200° |
| recording current: | Test Recording Current |
| recording waveform: | square wave |

### 10.2 Typical Field

The Typical Field of the tape shall be between 80 % and 120 % of the Reference Field.

© ISO/IEC 2001 – All rights reserved

Copyright International Organization for Standardization
Provided by IHS under license with ISO
No reproduction or networking permitted without license from IHS
Not for Resale

Traceability to the Reference Field is provided by the calibration factors supplied with each Secondary Standard Reference Tape.

### 10.3 Signal Amplitude

The Average Signal Amplitude, exclusive of missing pulses, at the recording density of 3 704 ftpmm shall be between 80 % and 130 % of the Standard Reference Amplitude.

Traceability to the Average Signal Amplitude of the Master Standard Reference Tape is provided by the calibration factors supplied with each Secondary Standard Reference Tape.

### 10.4 Resolution

The ratio of the Average Signal Amplitude at the physical recording density of 3 704 ftpmm to that at the physical recording density of 1 447 ftpmm shall be between 80 % and 120 % of the same ratio for the Master Standard Reference Tape.

Traceability to the resolution for the Master Standard Reference Tape is provided by the calibration factors supplied with each Secondary Standard Reference Tape.

### 10.5 Signal-to-Noise Ratio

The Signal-to-Noise Ratio is the average rms read signal amplitude divided by the average integrated rms noise amplitude, and expressed in decibels.

$$\text{SNR} = 20 \log \frac{\text{Average rms read signal amplitude}}{\text{Average integrated rms noise amplitude}} \text{ dB}$$

**Requirement**

The SNR for the tape under test ($\text{SNR}_{\text{tape}}$) shall be better than -2 dB relative to the SNR for the Master Standard Reference Tape ($\text{SNR}_{\text{MSRT}}$).

Traceability to the $\text{SNR}_{\text{MSRT}}$ is provided by the calibration factor supplied with each Secondary Standard Reference Tape. The Signal-to-Noise Ratio shall be measured using a spectrum analyser with a resolution bandwidth of 3 kHz.

**Procedure**

1. a.c. erase the tape to be tested.
2. Record the tape at 3 704 ftpmm. The associated recording frequency is denoted $f_1$.
3. Measure the rms signal amplitude by gating the sweep of the spectrum analyser. Begin the measurements 1 ms after initial read head contact with the tape. Take the measurements for 1 ms. Each sweep yields one measured value. Compute the average of 8 measured values. This is $S_{\text{tape}}$.

Measure the total rms noise level at frequency $f_2$, where $f_2$ is 2 MHz smaller than $f_1$. Again take measurements for 1 ms as above. Each sweep yields one measured value. Compute the average of 100 measured values. This is $N_{\text{total}}$.

4. Measure the rms read channel noise level at frequency $f_2$ for 1 ms as in step 3, without a tape loaded but with the motors running. Each sweep yields one measured value. Compute the average of 8 measured values. This is $N_{\text{amp}}$.
5. Compute the Signal-to-Noise Ratio for this pass, $20 \log \frac{S_{\text{tape}}}{N_{\text{tape}}}$ dB,

where

$$N_{\text{tape}} = \sqrt{N_{\text{total}}^2 - N_{\text{amp}}^2}\ .$$

$\frac{N_{\text{amp}}}{N_{\text{tape}}}$ shall be less than 0,7.

6. Repeat steps 3, 4 and 5 for at least 10 passes. Take the average of the 10 Signal-to-Noise Ratios to determine the Signal-to-Noise Ratio for the tape ($SNR_{\text{tape}}$).


© ISO/IEC 2001 – All rights reserved
Copyright International Organization for Standardization
Provided by IHS under license with ISO
No reproduction or networking permitted without license from IHS
Not for Resale

7. Repeat steps 1 to 6 for the Secondary Standard Reference Tape, to give $SNR_{MSRT}$.

The Signal-to-Noise Ratio characteristic is $SNR_{tape}$ - $SNR_{MSRT}$ dB.

## 10.6 Ease of erasure

When a tape has been recorded at 926 ftpmm with a recording current equal to the Test Recording Current for 3 704 ftpmm and passed through a longitudinal steady erasing field of 320 000 A/m any remaining signal shall not exceed 2 % of the Standard Reference Amplitude. The erasure field shall be reasonably uniform, for example, the field in the middle of a solenoid. This measurement shall be made with a band pass filter passing, at least, the first three harmonics.

## 10.7 Tape quality

### 10.7.1 Missing pulses

A missing pulse is a loss of read signal amplitude. A missing pulse exists when the base-to-peak read signal is 40 %, or less, of half the Average Signal Amplitude for the recording density of 3 704 ftpmm on the same tape.

### 10.7.2 Missing pulse zone

A missing pulse zone shall commence with a missing pulse and ends when a length of 1 mm of track has been measured. If a missing pulse zone continues for a distance exceeding 1 mm, a further missing pulse zone shall result.

A missing pulse zone does not continue from one track to the next.

The missing pulse zone rate shall be less than 1 in 5 x $10^6$ flux transitions and applies to both positive and negative azimuth tracks.

### 10.7.3 Overwrite

Overwrite is the ratio of the Average Signal Amplitude of the residual of a low density recording after overwriting at a higher density to the Average Signal Amplitude of the original low density recording.

Traceability to the overwrite ratio for the Master Standard Reference Tape is provided by the calibration factors supplied with each Secondary Standard Reference Tape.

**Procedure**

1. a.c. erase the tape.
2. Record at the physical density of 926 ftpmm and measure the Average Signal Amplitude.
3. Overwrite at the physical recording density of 3 704 ftpmm and measure the Average Signal Amplitude of the residual 926 ftpmm signal.
4. Repeat for the Secondary Standard Reference Tape.

**Requirement**

$$\text{The ratio} = \frac{\text{Residual Average Signal Amplitude at 926 ftpmm after overwriting}}{\text{Average Signal Amplitude of the original recording at 926 ftpmm}}$$

shall be less than 120 % of the same ratio for the Master Standard Reference Tape.

© ISO/IEC 2001 – All rights reserved

Copyright International Organization for Standardization
Provided by IHS under license with ISO
No reproduction or networking permitted without license from IHS
Not for Resale

# Section 4 - Requirements for an Interchanged Tape

## 11 Track Format

### 11.1 General

Information to be written to tape may consist of data bytes, Long File Marks, Short File Marks or Set Marks. Each of these pieces of information is considered to be a Logical Block. Data is first formed into Logical Transfer Segments (LTS). The LTSs are grouped and processed into compression units. The compression units are then formed into physical blocks.

Logical Blocks are converted into physical blocks as described in 11.2. The search fields are described in 11.3, and the servo is defined in 11.4. The elements needed to define the complete track layout are listed in 11.5.

Tracks are written in pairs with positive and negative azimuths. Each track comprises the same elements listed in order as follows, see figure 30.

— Pad
— Search fields
— Pad
— Servo zone (even tracks only)
— Pad (even tracks only)
— Search fields
— Physical block rows
— Search fields
— Pad
— Servo zone (even tracks only)
— Pad (even tracks only)
— Search fields
— Data clock synchronisation
— Physical block rows
— Search fields
— Pad
— Servo zone (even tracks only)
— Pad (even tracks only)
— Search fields
— Pad



--`,,```,,,,````-`-`,,`,,`,`,,`---
Copyright International Organization for Standardization
Provided by IHS under license with ISO
No reproduction or networking permitted without license from IHS
Not for Resale
© ISO/IEC 2001 – All rights reserved

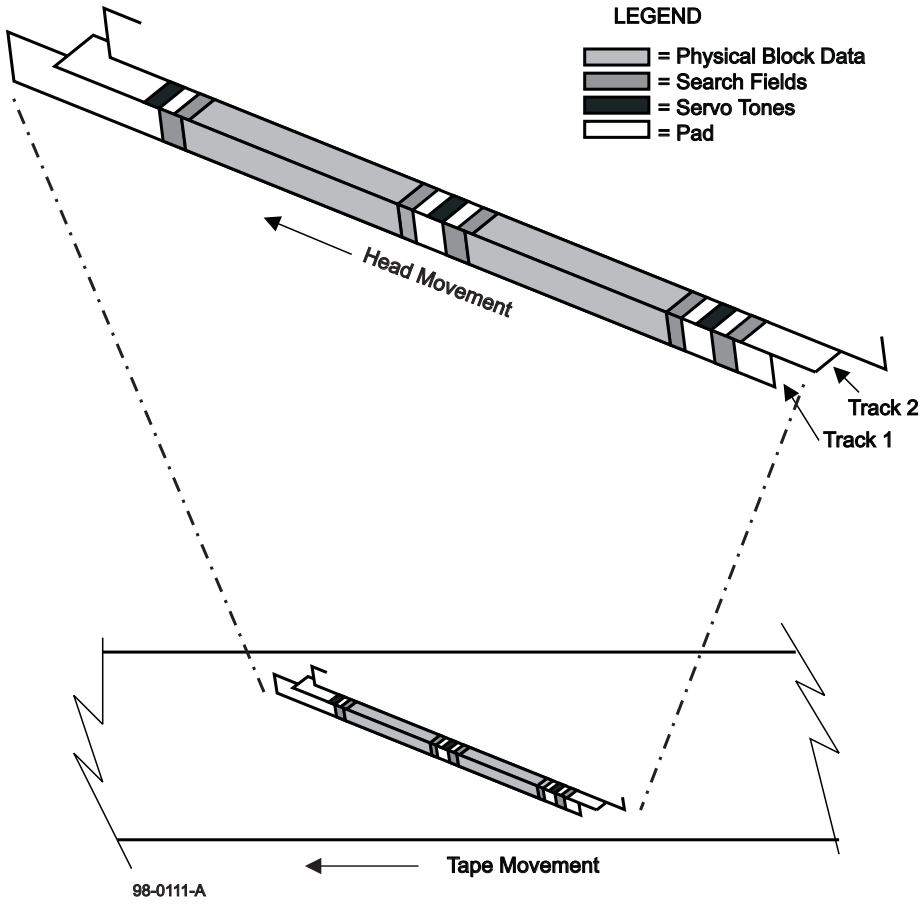


**Figure 30 - Track format**

## 11.2 Physical block format

### 11.2.1 Logical Transfer Segment (LTS)

The LTS shall comprise an LTS header followed by Logical Block data. A 4-byte Logical Block CRC, which shall be generated according to annex C, follows each Logical Block within the LTS. Logical Blocks may span an LTS or an LTS may consist of multiple Logical Blocks.

The 32-byte LTS header is shown in figure 31. The fields of the LTS shall be defined as follows.

© ISO/IEC 2001 – All rights reserved

Copyright International Organization for Standardization
Provided by IHS under license with ISO
No reproduction or networking permitted without license from IHS
Not for Resale

| Byte | 7 | 6 | 5 | 4 | 3 | 2 | 1 | 0 |
|---|---|---|---|---|---|---|---|---|
| **0** | 0 | 0 | 0 | 0 | LTS Type | | | |
| **1 to 3** | Block Size | | | | | | | |
| **4** | Set to (00) | | | | | | | |
| **5** | Set to (00) | | | | | | | |
| **6 and 7** | Block Count | | | | | | | |
| **8 to 11** | SMID | | | | | | | |
| **12 to 15** | FID | | | | | | | |
| **16 to 19** | LID | | | | | | | |
| **20 to 27** | Set to (00) | | | | | | | |
| **28 to 31** | Header CRC | | | | | | | |

**Figure 31 - LTS header**

LTS Type – This 4-bit field shall specify the LTS type.

(0) Data
(A) Long File Mark
(B) Short File Mark
(C) LBOP
(D) Set Mark
(F) EOD

All other values shall be ignored for interchange.

Block Size – This 3-byte field shall specify the Logical Block size.

Block Count – This 2-byte field shall specify the number of Logical Blocks in the LTS.

SMID – This 4-byte field shall specify the number of Set Marks between the LBOP and the current Logical Block Position including the current LTS.

FID – This 4-byte field shall specify the number of File Marks between the LBOP and the current Logical Block Position including the current LTS.

LID – This 4-byte field shall specify the number of Logical Blocks between the LBOP and the current Logical Block Position including the current LTS.

Header CRC - This 4-byte field shall specify the Header CRC that shall be generated over the LTS header according to annex C.

### 11.2.2 Compression Unit

The LTS shall be processed into a Compression Unit. The Compression Unit shall be proceeded by an 8-byte Compression Unit Header (CUH) as shown in figure 32. The fields of the CUH shall be defined as follows.

| Byte | 7 | 6 | 5 | 4 | 3 | 2 | 1 | 0 |
|---|---|---|---|---|---|---|---|---|
| **0** | NDB | 0 | 0 | 0 | Append | Comp | Last | End |
| **1 to 3** | Compressed Count | | | | | | | |
| **4** | Compression Unit Type | | | | | | | |
| **5 to 7** | Original Size | | | | | | | |

**Figure 32 – Compression Unit Header**


© ISO/IEC 2001 – All rights reserved
Copyright International Organization for Standardization
Provided by IHS under license with ISO
No reproduction or networking permitted without license from IHS
Not for Resale

NDB – This bit shall be set to ONE to specify the Compression Unit does not contain data (Set Mark or File Mark blocks), else this bit shall be set to ZERO.

Append – This bit shall be set to ONE to specify that the CUH is associated with an appended Compression Unit, else this bit shall be set to ZERO.

Comp – This bit shall be set to ONE if the Compression Unit was processed with a compression algorithm. If the Compression Unit was not compressed this bit shall be set to ZERO.

Last – This bit shall be set to ONE to specify that this is the last CUH in the physical block. This bit shall be set to ZERO if there is another CUH following the current CUH.

End – This bit shall be set to ONE if the Compression Unit ends within the physical block. If the Compression Unit is continued into the next physical block this bit shall be set to ZERO.

Compressed Count – If this is the first CUH for the Compression Unit, this 3-byte field shall specify the total number of bytes in the Compression Unit. If this is not the first CUH for the Compression Unit, this 3-byte field shall specify the number of bytes of the Compression Unit that are in the current physical block.

Compression Unit Type – This 1-byte field shall specify the type of the Compression Unit.

(00) Data
(0A) Long File Mark
(0B) Short File Mark
(0C) LBOP
(0D) Set Mark
(0F) EOD

Original Size – This 3-byte field shall specify the number of bytes in the Compression Unit before compression.

### 11.2.3 Physical block

The Compression Units are packed into 33 448 byte physical blocks as shown in figure 33. There shall be 11 physical block types as shown in figure 34. The contents of the data area for each of the physical block types are described in 11.2.3.3

Each 33 448 byte physical block shall include the following information.

24 bytes of physical header data
12 bytes of logical header data
33 400 bytes of data
4 bytes of checksum
8 bytes CRC data

--`,,```,,,,````-`-`,,`,,`,`,,`---

© ISO/IEC 2001 – All rights reserved

Copyright International Organization for Standardization
Provided by IHS under license with ISO
No reproduction or networking permitted without license from IHS
Not for Resale

| Byte | 7 | 6 | 5 | 4 | 3 | 2 | 1 | 0 |
|---|---|---|---|---|---|---|---|---|
| **0 to 23** | Physical Block Header | | | | | | | |
| **24 to 35** | Logical Header | | | | | | | |
| **36 to 43** | Compression Unit Header | | | | | | | |
| **44 to *n*** | Compression Unit | | | | | | | |
| ***n*+1 to *n*+1+7** | Compression Unit Header | | | | | | | |
| **...** | Compression Unit | | | | | | | |
| **...** | | | | | | | | |
| ***m*-1-7 to *m*-1** | Compression Unit Header | | | | | | | |
| ***m* to 33 435** | Compression Unit | | | | | | | |
| **33 436 to 33 439** | Data Area Checksum | | | | | | | |
| **33 440 to 33 447** | Physical Block CRC | | | | | | | |

**Figure 33 – Physical block**

| Type | Definition |
|---|---|
| (00) | Data |
| (04) | ECC3 Checkbyte block |
| (05) | Erase |
| (09) | Physical Beginning of Partition |
| (0A) | Long File Mark |
| (0B) | Short File Mark |
| (0C) | Logical Beginning of Partition |
| (0D) | Set Mark |
| (0E) | Gap |
| (0F) | End Of Data |
| (10) | Shutdown |

**Figure 34 - Physical Block types**


--`,,```,,,,````-`-`,,`,,`,`,,`---
Copyright International Organization for Standardization
Provided by IHS under license with ISO
No reproduction or networking permitted without license from IHS
Not for Resale
© ISO/IEC 2001 – All rights reserved

#### 11.2.3.1 Physical Block header

The Physical Block header shall consist of 24 bytes as shown in figure 35.

| Byte | 7 | 6 | 5 | 4 | 3 | 2 | 1 | 0 |
|---|---|---|---|---|---|---|---|---|
| 0 to 3 | PID | | | | | | | |
| 4 to 7 | BID | | | | | | | |
| 8 | Partition | | | | | | | |
| 9 | Rwtstat | | | | rwcount | | | |
| 10 | SID | | | | | | | |
| 11 | Type | | | | | | | |
| 12 | (00) | | | | | | | |
| 13 | ECC3 Group Size | | | | | | | |
| 14 | ECC3 ID | | | | | | | |
| 15 | ECC3 Index | | | | | | | |
| 16 to 19 | (00) | | | | | | | |
| 20 to 23 | Physical Header Checksum | | | | | | | |

**Figure 35 - Physical Block header**

##### 11.2.3.1.1 Physical Identifier (PID)

The PID shall be a 4-byte counter of physical blocks on tape and shall specify the absolute position on tape. Each physical block written, regardless of type, shall have the next sequential PID number. The blank areas between partitions shall have PID numbers assigned, even though they are never written. The first physical block of the Tape History Log shall be assigned PID number set to (00000000). The PID of the first partition on tape shall be assigned a PID number set to (000017DE).

##### 11.2.3.1.2 Block Identifier (BID)

The BID shall be a 4-byte counter indicating the sequence of logical blocks as they are received from the host. The BID shall be set to (00000000) at the beginning of each partition. The BID shall have the following values depending on the block type.

For block types Data, Long File Mark, Short File Mark, Set Mark and End of Data, the first physical block within the partition shall have a BID set to (00000001). The BID shall be incremented by 1 for each subsequent physical block of these block types.

For block type ECC3, the BID shall be set to the current ABID (see 11.2.3.3.2 and 11.3.1).

For block type Erase, the BID shall be set to the current ABID.

For block types Logical Beginning of Partition and Physical Beginning of Partition (0C), the BID shall be set to (00000000).

For block type Gap, the BID shall be set to the current ABID if the Gap blocks are written between data blocks.

For block type Shutdown, the BID shall be set to (FFFFFFFF).

##### 11.2.3.1.3 Rwtstat

Rwtstat is a 4-bit field that shall specify the rewrite status of a physical block. Its value shall be set as follows:

0000 shall specify that the physical block is the first instance of a physical block.

0001 shall specify that the physical block was rewritten prior to RBC.

0010 shall specify that the physical block was rewritten after a failed RBC.

0011 shall specify that the physical block was rewritten for reasons other than a failed RBC.

© ISO/IEC 2001 – All rights reserved

Copyright International Organization for Standardization
Provided by IHS under license with ISO
No reproduction or networking permitted without license from IHS
Not for Resale

The last two physical blocks of the PBOP and LBOP shall have Rwtstat set to 0011.

All other settings are not used and shall be ignored for interchange.

#### 11.2.3.1.4 rwcount

The rwcount is a 4-bit field that shall specify the number of times a physical block has been rewritten. This value shall be 0 for the first instance of a block. This field is valid only on Data, Short File Mark, and ECC3 physical blocks.

#### 11.2.3.1.5 Stream Identifier (SID)

The SID shall be a 1-byte counter used to identify invalid physical blocks in a sequence of physical blocks during a write. The SID shall be incremented by 1 every time tape motion stops.

#### 11.2.3.1.6 Type

The Type is a 1-byte field that shall specify the physical block type of the block associated with this header. The list of block types and values is shown in figure 34.

#### 11.2.3.1.7 ECC3 Group Size

The ECC3 Group Size shall specify the number of physical blocks in the ECC3 group exclusive of the ECC3 blocks.

#### 11.2.3.1.8 ECC3 ID

The ECC3 ID is a 1-byte field that shall specify the physical blocks included in an ECC3 group. All physical block within an ECC3 group shall have the same ECC3 ID. The ECC3 ID shall increment by 1 as each new ECC3 group is added to the tape.

#### 11.2.3.1.9 ECC3 Index

The ECC3 index is a 1-byte field that shall be assigned to all physical blocks within an ECC3 group including the ECC3 checkbyte blocks. The first block in the group shall have an ECC3 Index set to (00).

#### 11.2.3.1.10 Physical header checksum

The 4-byte physical header checksum shall be a running sum over the 20 bytes of the physical header, starting at the value 0. The bytes shall be placed into 4-byte words and arithmetically summed as words with overflow ignored.

### 11.2.3.2 Logical header

A 12-byte Logical Header shall follow the Physical header. The Logical Header shall consist of 12 bytes as shown in figure 36.

| Byte | 7 | 6 | 5 | 4 | 3 | 2 | 1 | 0 |
|---|---|---|---|---|---|---|---|---|
| 0 | CUID | | | | | | | |
| 1 to 3 | SMID | | | | | | | |
| 4 to 7 | FID | | | | | | | |
| 8 to 11 | LID | | | | | | | |

**Figure 36 - Logical Header**

#### 11.2.3.2.1 Compression Unit Identifier (CUID)

The CUID shall be a 1-byte counter that shall specify the compression unit of the first full or partial compression unit in the physical block. This counter shall be set to (01) at the beginning of the partition and incremented by 1 for each compression unit.

#### 11.2.3.2.2 Set Mark Identifier (SMID)

The SMID shall be a 3-byte counter that shall specify the Set to which the physical block belongs. The SMID shall be set to (000000) for all physical blocks up to and including the first Set Mark written in a partition. It shall be incremented by 1 for each subsequent Set Mark written.

#### 11.2.3.2.3 File Identifier (FID)

The FID shall be a 4-byte counter that shall specify the file to which the physical block belongs. The FID shall be set to (00000000) for all physical blocks up to and including the first File mark written in a partition. It shall be incremented by 1 for each subsequent Short or Long File Mark written.


--`,,```,,,,````-`-`,,`,,`,`,,`---
© ISO/IEC 2001 – All rights reserved
Copyright International Organization for Standardization
Provided by IHS under license with ISO
No reproduction or networking permitted without license from IHS
Not for Resale

#### 11.2.3.2.4 Logical Block Identifier (LID)

The LID shall be a 4-byte counter that counts the Logical Blocks sent from the host system. The first Logical Block within a Partition shall have a LID set to (00000000). The LID shall be incremented by 1 for each Logical Block, File Mark or Set Mark written. The LID loaded into the Header data shall be the LID of the first Logical Block partially or wholly contained in the physical block.

### 11.2.3.3 Data Area

The content of the data are different depending on the block type.

#### 11.2.3.3.1 Data block (00)

Compression Unit Headers and Compression Units shall fill the data area for a data type block. A CUH shall follow the Logical Header even if the Compression Unit does not start in the physical block.

#### 11.2.3.3.2 ECC3 block (04)

Two ECC3 blocks shall be generated for each ECC3 group. The ECC3 group may contain up to 62 physical blocks. ECC3 check bytes shall be generated over the Logical Header, data area, and data area checksum as described in annex D. The data area CRC shall not be included in the ECC3 generation.

#### 11.2.3.3.3 Erase block (05)

The contents of an Erase block are not specified by this International Standard and shall be ignored for interchange.

#### 11.2.3.3.4 Physical Beginning of Partition block (09) and Logical Beginning of Partition block (0C)

The data area for a PBOP and LBOP block shall begin with a CUH and a LTS header. The LTS header shall be followed by 40 bytes of tape format data as shown in figure 37.

© ISO/IEC 2001 – All rights reserved

Copyright International Organization for Standardization
Provided by IHS under license with ISO
No reproduction or networking permitted without license from IHS
Not for Resale

| Byte | 7 | 6 | 5 | 4 | 3 | 2 | 1 | 0 |
|---|---|---|---|---|---|---|---|---|
| 0 to 3 | (00000000) | | | | | | | |
| 4 to 7 | Structure length | | | | | | | |
| 8 | 0 | N | (00) | | | | | |
| 9 | Comp Alg | | | | Tape Format | | | |
| 10 | Tape type | | | | | | | |
| 11 | ECC3 blocks | | | | | | | |
| 12 to 19 | Tape ID | | | | | | | |
| 20 to 23 | ECC row | | | | | | | |
| 24 to 27 | ECC column | | | | | | | |
| 28 to 31 | Row ECC checkbytes | | | | | | | |
| 32 to 35 | Column ECC checkbytes | | | | | | | |
| 36 to 39 | (00000000) | | | | | | | |

**Figure 37 – Tape format data**

Structure length – This 4-byte field shall specify the number of bytes to follow in the data structure. This field shall be set to 32.

N – In LBOP blocks, this bit shall be set to ONE if no rewrites are allowed in this partition and ZERO if rewrites are allowed in this partition. In PBOP blocks this bit shall be set to ZERO.

Comp Alg – This 4-bit field shall specify the compression algorithm used in the partition. A value (0) shall specify IDRC. A value (1) shall specify ALDC compression with a history buffer size of 1 024 bytes.

Tape Format – This 4-bit field shall be set to (1) for the MammothTape-2 format.

Tape type – For a data tape for information interchange, this byte shall be set to (00)

ECC3 Blocks – This 1-byte field shall specify the number of ECC3 blocks associated with each ECC3 group within the partition.

Tape ID – This 8-byte field may be used to provide an identifier for the tape. It shall be ignored for interchange.

ECC row – This 4-byte field shall specify the number of bytes in each row of the information matrix including the ECC check bytes. For this International Standard, this byte shall be set to 160.

ECC column – This 4-byte field shall specify the number of bytes in each column of the information matrix including the ECC check bytes. For this International Standard, this byte shall be set to 242.

Row ECC checkbytes – This 4-byte field shall specify the number of check bytes in each row of the information matrix. For this International Standard, this byte shall be set to 12.

Column ECC checkbytes – This 4-byte field shall specify the number of check bytes in each column of the information matrix. For this International Standard, this byte shall be set to 16.

Following the tape format data there shall be a 32-byte partition information structure for each partition on tape as shown in figure 38.



--`,,```,,,,````-`-`,,`,,`,`,,`---
Copyright International Organization for Standardization
Provided by IHS under license with ISO
No reproduction or networking permitted without license from IHS
Not for Resale
© ISO/IEC 2001 – All rights reserved

| Byte | 7 | 6 | 5 | 4 | 3 | 2 | 1 | 0 |
|---|---|---|---|---|---|---|---|---|
| 0 to 3 | (00000001) | | | | | | | |
| 4 to 7 | Structure length | | | | | | | |
| 8 | (0) | | | | PSUM | | | |
| 9 | Partition SID | | | | | | | |
| 10 | Total Partitions | | | | | | | |
| 11 | Current Partition | | | | | | | |
| 12 to 15 | (00000000) | | | | | | | |
| 16 to 17 | Partition size | | | | | | | |
| 18 to 19 | (0000) | | | | | | | |
| 20 to 23 | PBOP PID | | | | | | | |
| 24 to 27 | PEOP PID | | | | | | | |
| 28 to 31 | (00000000) | | | | | | | |

**Figure 38 – Partition information structure**

Structure length – This 4-byte field shall specify the number of bytes to follow in the data structure. This field shall be set to 24.

PSUM – This field shall be set to 106 to specify that the partition size unit of measure is in megabytes.

Partition SID – This 4-byte field shall be set to (00000000) the first time a tape is partitioned. It shall be incremented by one each time the tape is formatted with partitions.

Total Partitions – This 1-byte field shall specify the number of partitions on the tape starting with 1.

Current Partition – This 1-byte field shall specify the partition number that the PBOP or LBOP identifies. The partition number for the THL shall be (FF).

Partition size – This 1-byte field shall specify the length of the useable data area in the partition. The PSUM field shall specify the unit of measure.

PBOP PID - This 4-byte field shall specify the PID number of the first PBOP block of the partition.

PEOT PID – This 4-byte field shall specify the PID number of the last PID that can be written in the partition.

The remaining data area shall be written with (00).

#### 11.2.3.3.5 Long File Mark (0A), Set Mark (0D) and EOD (0F)

The data area for a Long file mark, Set mark and EOD shall begin with a CUH and a LTS header. The LTS header shall be followed by 24 bytes of append data as shown in figure 39.

--`,,```,,,,````-`-`,,`,,`,`,,`---

© ISO/IEC 2001 – All rights reserved

Copyright International Organization for Standardization
Provided by IHS under license with ISO
No reproduction or networking permitted without license from IHS
Not for Resale

| Byte | 7 | 6 | 5 | 4 | 3 | 2 | 1 | 0 |
|---|---|---|---|---|---|---|---|---|
| 0 to 3 | (00000002) | | | | | | | |
| 4 to 7 | Structure length | | | | | | | |
| 8 to 11 | Before PID | | | | | | | |
| 12 to 15 | Before BID | | | | | | | |
| 16 to 19 | After PID | | | | | | | |
| 20 to 23 | After BID | | | | | | | |
| 24 to 27 | ECC3 ID | | | | | | | |
| 28 to 30 | (000000) | | | | | | | |
| 31 | CUID | | | | | | | |
| 32 to 35 | CRC | | | | | | | |

**Figure 39 – Append data**

Structure length – This 4-byte field shall specify the number of bytes to follow in the data structure. This field shall be set to 28.

Before PID – This 4-byte field shall specify the PID of the next block to be written if the mark were to be overwritten.

Before BID – This 4-byte field shall specify the BID of the next block to be written if the mark were to be overwritten.

After PID – This 4-byte field shall specify the PID of the next block to be written if the mark were to be appended. For an EOD block this field shall be set to (00000000).

After BID – This 4-byte field shall specify the PID of the next block to be written if the mark were to be appended. For an EOD block this field shall be set to (00000000).

ECC3 ID – This 4-byte field shall specify the ID of the next ECC3 group.

CUID - This 1-byte field shall specify the CUID of the next compression unit to be written.

CRC - This 4-byte CRC shall be calculated over the 32 bytes of the append data according to annex C.

#### 11.2.3.3.6 Short File Mark (0B), Gap (0E), and Shutdown(10)

The content of the data area in a Short File Mark, Gap and Shutdown block type is not defined by this International Standard and shall be ignored for interchange.

### 11.2.3.4 Data area checksum

The 4-byte data area checksum shall be a running sum starting at 0 of the 12 bytes of the logical header and the 33 400 bytes of the data area. The bytes shall be placed into 4-byte words and summed as words with overflow ignored.

### 11.2.3.5 Data area CRC

The Data area CRC shall be calculated over the 12 bytes of the logical header and the 33 400 bytes of the data area and the 4 bytes of checksum as described in annex E.

### 11.2.4 Information Matrix

The 33 448 bytes of the physical block shall be loaded into a 148 column by 226 row information matrix as shown in figure 40. The matrix shall be loaded by column starting with column 0. Each cell of the matrix shall consist of one byte of data. The 24 bytes of the physical header data shall be loaded sequentially into column 0, rows 0 to 23. The 12 bytes of logical header data shall be loaded sequentially into column 0, rows 24 to 35. The 33 400 bytes of data area shall be loaded sequentially into the matrix sequentially by column beginning with column 0 row 36 and ending with column 147 row 213. The 4 bytes of data area checksum shall be generated and loaded into column 147, rows 214 to 217. The 8 bytes of CRC data shall be loaded in column 147, rows 218 to 225.


© ISO/IEC 2001 – All rights reserved
Copyright International Organization for Standardization
Provided by IHS under license with ISO
No reproduction or networking permitted without license from IHS
Not for Resale

The 5 272 bytes of ECC shall be generated according to annex F. The 2 712 horizontal ECC bytes shall be loaded into columns 148 to 159, rows 0 to 225. The 2 560 vertical ECC bytes shall be loaded into columns 0 to 159, rows 226 to 241.

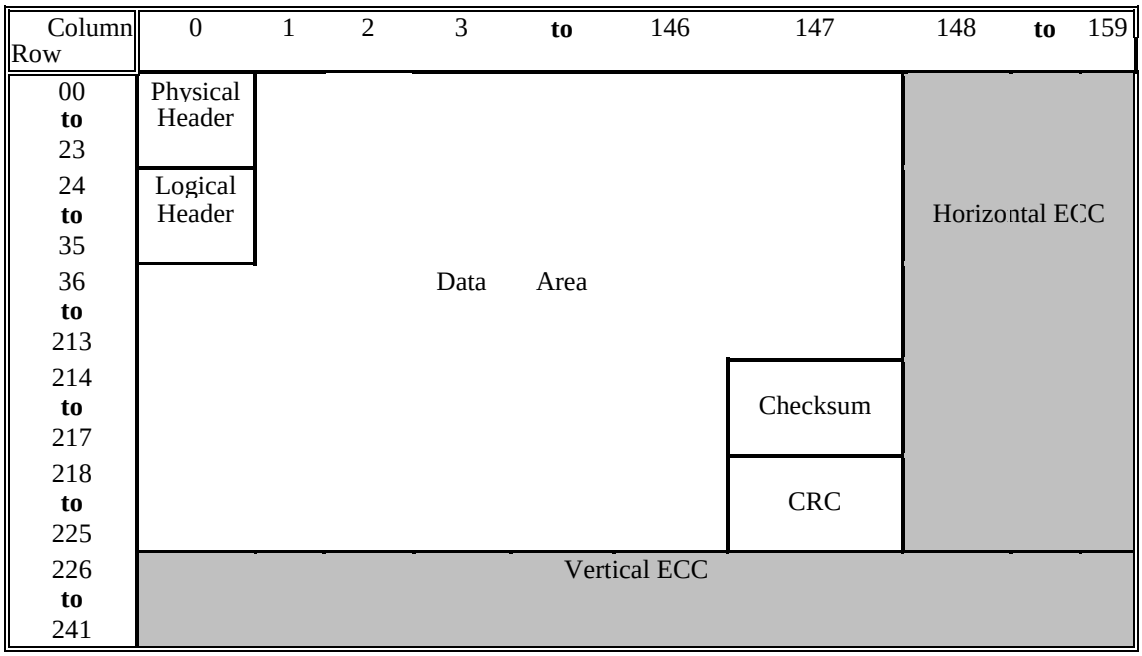


**Figure 40 - Information matrix**

#### 11.2.5 Recorded patterns

Data from the 38 720-byte information matrix shall be recorded sequentially on the tape by rows beginning with row 0. The data stream for each row shall be comprised of a 20-Channel bit symbol synchronisation field followed by a 30-Channel bit row ID, followed by the 1 600 Channel bits from each row. The entire data stream shall be pre-coded according to annex G before writing to the tape.

##### 11.2.5.1 Symbol synchronisation field

The 20-Channel bit symbol synchronisation field shall be (A1F0B).

##### 11.2.5.2 Row ID

Bits 7 to 3 of the 1-byte row ID shall be the lower 5 bits of the row number. Bits 2 to 0 shall be the upper 3 bits of a modulo14 counter that increments by 1 for each track written. This byte shall be repeated twice for a total of 3 copies. The row ID shall be encoded into Channel bits using 8 to 10 conversion according to annex H.

##### 11.2.5.3 Row bytes

The bytes from each row shall be randomised according to annex J. The 160 bytes of data shall be encoded into Channel bits using 8 to 10 conversion according to annex H.

### 11.3 Search field format

#### 11.3.1 Search field data

The format of the 32-byte search field data shall be as shown in figure 41.

--`,,```,,,,````-`-`,,`,,`,`,,`---

© ISO/IEC 2001 – All rights reserved

Copyright International Organization for Standardization
Provided by IHS under license with ISO
No reproduction or networking permitted without license from IHS
Not for Resale

| Byte | 7 | 6 | 5 | 4 | 3 | 2 | 1 | 0 |
|---|---|---|---|---|---|---|---|---|
| 0 | Partition | | | | | | | |
| 1 to 3 | SMID | | | | | | | |
| 4 to 7 | FID | | | | | | | |
| 8 to 11 | LID | | | | | | | |
| 12 to 15 | PID | | | | | | | |
| 16 to 19 | ABID | | | | | | | |
| 20 to 23 | DBID | | | | | | | |
| 24 | EOD | BOP | THL | Erase | (0) | | | |
| 25 | CUID | | | | | | | |
| 26 | PSID | | | | | | | |
| 27 | SID | | | | | | | |
| 28 to 29 | (00) | | | | | | | |
| 30 to 31 | Format ID | | | | | | | |

**Figure 41 - Search field data**

The fields of the search field data shall be defined as follows.

Partition - This 1-byte field shall specify the partition number of the current partition.

SMID - This 3-byte field shall specify the Set Mark number of the next Set Mark to be written. Search fields on both tracks of a Set Mark track pair shall have a SMID that is equal to the SMID in the header block of the Set Mark Block.

FID - This 4-byte field shall specify the File Mark number of the next File Mark to be written. Search fields on both tracks of a Long File Mark track pair shall have a FID that is equal to the FID in the header block of the Long File Mark Block. The FID of the search field on the track following a Short File Mark shall be equal to the FID in the block header of the last Short File Mark Block on the previous track.

LID - This 4-byte field shall specify the largest Logical Block number written before the track containing this search field.

PID - This 4-byte field shall specify the PID number of the last physical block on the previously written track.

ABID - This 4-byte field shall specify the smallest BID written of the most recent ECC3 group with any blocks attempted to be written.

DBID - This 4-byte field shall specify the largest BID of the earliest ECC3 group that has had all of its blocks successfully written, including ECC3 blocks.

EOD - This bit shall be set to ONE when the search field is located in one of the EOD tracks. In all other cases this bit shall be set to ZERO.

BOP - This bit shall be set to ONE when the search field is located in one of the LBOP or PBOP tracks. In all other cases this bit shall be set to ZERO.

THL - This bit shall be set to ONE when the search field is located in the Tape History Log. In all other cases this bit shall be set to ZERO.

Erase - This bit shall be set to ONE when the search field is written as part of an erase operation. In all other cases this bit shall be set to ZERO.

PSID - This byte shall be set to ZERO the first time a tape is partitioned. It shall be incremented by 1 each time the tape is repartitioned.

SID - The SID shall be a 1-byte counter used to identify invalid physical blocks in a sequence of physical blocks during a write. The SID shall be incremented by 1 every time tape motion stops.

Format ID – This 2-byte field shall specify the tape format. These bytes shall be set to (0001).


© ISO/IEC 2001 – All rights reserved
Copyright International Organization for Standardization
Provided by IHS under license with ISO
No reproduction or networking permitted without license from IHS
Not for Resale

#### 11.3.2 Search field CRC and ECC

A 2-byte CRC shall be generated from the search field data according to annex K and appended to the end of the search field data. An 8-byte ECC covering the 32-byte search field and 2-byte CRC shall be generated as defined in annex L.

#### 11.3.3 Search field recording patterns

The data stream for each search field shall comprise of 50 channel bits of synchronisation, 20 Channel bits of symbol synchronisation, followed by 30 Channel bits of search field ID, followed by 420 Channel bits of search field data. The entire data stream shall be pre-coded according to annex G before writing.

##### 11.3.3.1 Synchronisation field

The 50-Channel bit synchronisation field shall be one of two patterns. Pattern (3FFEDF92D93FF) shall be used if the preceding Pad pattern is (…3333). Pattern (3FFADF92D93FF) shall be used if the preceding Pad pattern is (…CCCC).

##### 11.3.3.2 Symbol synchronisation field

The 20-Channel bit symbol synchronisation field shall be (A1F0B).

##### 11.3.3.3 Search field ID

Bits 7 to 3 of the 1-byte search field ID shall be set to 01111 for search fields on track 1 that precede a servo zone, 10000 for search fields on track 3 that precede a servo zone and 01101 for all other search fields. Bits 2 to 0 shall be set to 111. This byte shall be repeated twice. The search field ID shall be encoded into Channel bits using 8 to 10 conversion according to annex H

##### 11.3.3.4 Search field data

The 42 bytes of search field data shall be encoded into Channel bits using 8 to 10 conversion according to annex H.

### 11.4 Servo area

There shall be three servo areas located on track 2 and track 4. Each servo area shall be preceded and followed by a servo pad area written at 2 869,5 ftpmm (2T). The servo areas shall be written at 57,39 ftpmm (Tone).

### 11.5 Track layout

The layout of the track elements defined in the previous clauses shall be as shown in figure 42, figure 43, and figure 44. Tracks are written in sets of four tracks. Track 1 differs from track 3 in that track 1 has a 6T pattern (956,5 ftpmm) preceding the PAD in the Search Field area in three locations. The 6T track 1 ID allows track 1 to be recognised if the tape is developed. Track 2 and track 4 shall have the same elements.

© ISO/IEC 2001 – All rights reserved

Copyright International Organization for Standardization
Provided by IHS under license with ISO
No reproduction or networking permitted without license from IHS
Not for Resale

| Element | Channel bits | Pattern |
|---|---|---|
| Pad | 2 020 | 2T |
| Search Field | 520 | Data |
| Search Field | 520 | Data |
| Search Field | 520 | Data |
| Search Field | 520 | Data |
| Track 1 ID | 60 | 6T |
| Pad | 2 560 | 2T |
| Search Field | 520 | Data |
| Search Field | 520 | Data |
| Data PLL | 220 | 2T |
| Data Row 0 to Row 120 | 199 650 | Data |
| Pad | 50 | 2T |
| Search Field | 520 | Data |
| Search Field | 520 | Data |
| Search Field | 520 | Data |
| Search Field | 520 | Data |
| Search Field | 520 | Data |
| Track 1 ID | 60 | 6T |
| Pad | 2 560 | 2T |
| Search Field | 520 | Data |
| Search Field | 520 | Data |
| Search Field | 520 | Data |
| Data PLL | 220 | 2T |
| Data Row 121 to Row 241 | 199 650 | Data |
| Pad | 50 | 2T |
| Search Field | 520 | Data |
| Search Field | 520 | Data |
| Search Field | 520 | Data |
| Search Field | 520 | Data |
| Search Field | 520 | Data |
| Search Field | 520 | Data |
| Track 1 ID | 60 | 6T |
| Pad | 3 880 | 2T |

**Figure 42 - Track 1 layout**


© ISO/IEC 2001 – All rights reserved
Copyright International Organization for Standardization
Provided by IHS under license with ISO
No reproduction or networking permitted without license from IHS
Not for Resale

| Element | Channel bits | Pattern |
|---|---|---|
| Pad | 1 980 | 2T |
| Search Field | 520 | Data |
| Search Field | 520 | Data |
| Search Field | 520 | Data |
| Pad | 1 300 | 2T |
| Servo Zone | 1 200 | Tone |
| Pad | 1 300 | 2T |
| Search Field | 520 | Data |
| Search Field | 520 | Data |
| Data PLL | 80 | 2T |
| Data Row 0 to Row 120 | 199 650 | Data |
| Pad | 50 | 2T |
| Search Field | 520 | Data |
| Search Field | 520 | Data |
| Search Field | 520 | Data |
| Pad | 1 300 | 2T |
| Servo Zone | 1 200 | Tone |
| Pad | 1 300 | 2T |
| Search Field | 520 | Data |
| Search Field | 520 | Data |
| Search Field | 520 | Data |
| Data PLL | 80 | 2T |
| Data Row 121 to Row 241 | 199 650 | Data |
| Pad | 50 | 2T |
| Search Field | 520 | Data |
| Search Field | 520 | Data |
| Search Field | 520 | Data |
| Search Field | 520 | Data |
| Pad | 1 300 | 2T |
| Servo Zone | 1 200 | Tone |
| Pad | 2 000 | 2T |

**Figure 43 - Track 2 and track 4 layouts**

© ISO/IEC 2001 – All rights reserved

Copyright International Organization for Standardization
Provided by IHS under license with ISO
No reproduction or networking permitted without license from IHS
Not for Resale

| Element | Channel bits | Pattern |
|---|---|---|
| Pad | 2 020 | 2T |
| Search Field | 520 | Data |
| Search Field | 520 | Data |
| Search Field | 520 | Data |
| Search Field | 520 | Data |
| Pad | 2 620 | 2T |
| Search Field | 520 | Data |
| Search Field | 520 | Data |
| Data PLL | 220 | 2T |
| Data Row 0 to Row 120 | 199 650 | Data |
| Pad | 50 | 2T |
| Search Field | 520 | Data |
| Search Field | 520 | Data |
| Search Field | 520 | Data |
| Search Field | 520 | Data |
| Search Field | 520 | Data |
| Pad | 2 620 | 2T |
| Search Field | 520 | Data |
| Search Field | 520 | Data |
| Search Field | 520 | Data |
| Data PLL | 220 | 2T |
| Data Row 121 to Row 241 | 199 650 | Data |
| Pad | 50 | 2T |
| Search Field | 520 | Data |
| Search Field | 520 | Data |
| Search Field | 520 | Data |
| Search Field | 520 | Data |
| Search Field | 520 | Data |
| Search Field | 520 | Data |
| Pad | 3 940 | 2T |

**Figure 44 - Track 3 layout**

# 12 Method of recording

The method of recording shall be as follows.

— A ONE shall be represented by a flux transition at the centre of a bit cell.
— A ZERO shall be represented by no flux transitions in the bit cell.

## 12.1 Physical Recording Density

The nominal maximum physical recording density shall be 5 739 ftpmm and occurs for a pattern of all ONEs. The resulting nominal bit cell length is 0,174 µm.

### 12.1.1 Long Term Average Bit Cell Length

The long-term average bit cell length for each track shall be measured over a minimum of 133 060 consecutive bit cells. It shall be within 0,20 % of the nominal bit cell length.

### 12.1.2 Short Term Average Bit Cell Length

The short-term average bit cell length shall be the average taken over any 16 bit cells. The short-term average bit cell length shall be within 0,35 % of the long-term average bit cell length for the preceding track.

### 12.1.3 Rate of Change

The rate of change of the short-term average bit cell length, taken over any two consecutive 16-bit cell lengths, shall not exceed 0,05 %.

--`,,```,,,,````-`-`,,`,,`,`,,`---



© ISO/IEC 2001 – All rights reserved
Copyright International Organization for Standardization
Provided by IHS under license with ISO
No reproduction or networking permitted without license from IHS
Not for Resale

### 12.2 Bit Shift

The maximum displacement of any ONEs zero crossing, exclusive of missing pulses, shall not deviate by more than 25 % from the expected position as defined by the average bit cell length. See Annex M for the method of measurement.

### 12.3 Amplitude of Data Signals

The signal amplitude averaged over a minimum of 3 000 flux transitions at 3 704 ftpmm shall be between 80 % and 130 % of the Standard Reference Amplitude.

## 13 Track geometry

### 13.1 General

The helical track pattern is formed by the relationship between the direction of tape motion and the axis of rotation of a pair of heads, one of which has a positive azimuth angle and the other a negative azimuth angle. The direction of recording is away from the Tape Reference Edge. The track location and dimensions shall be shown in figure 45.

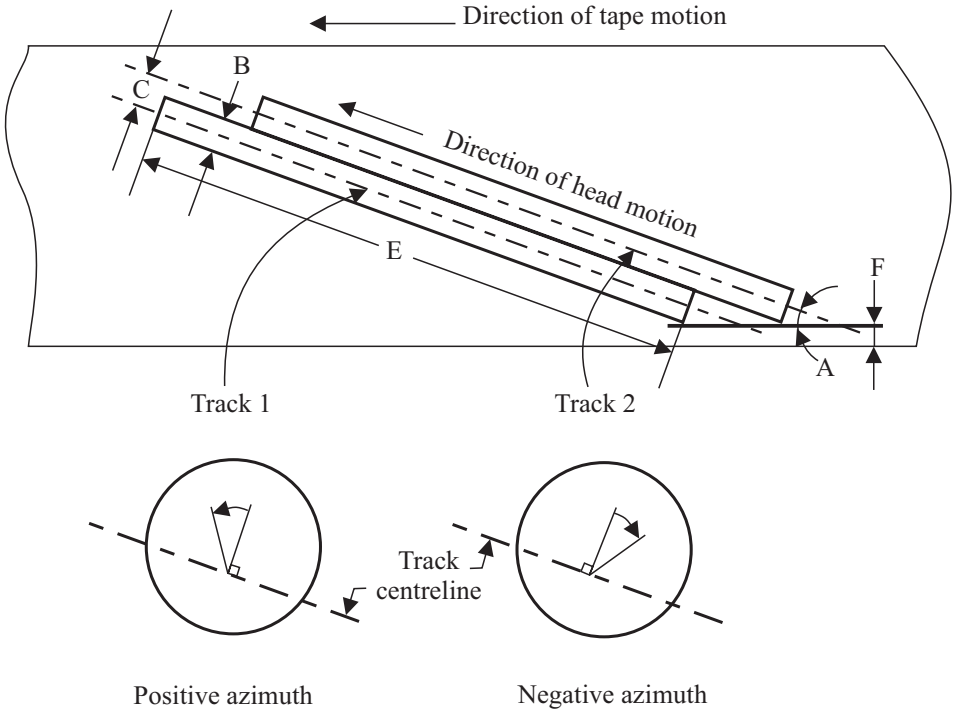


A Track angle
B Track width
C Track pitch
E Track length
F Guard band

**Figure 45 - Track location and dimensions**

### 13.2 Track pitch

The track pitch between any two adjacent tracks shall be 9,91 μm ± 1,50 μm.

### 13.3 Average track pitch

The average track pitch taken over any group of 60 consecutive tracks shall be 9,91 μm ± 0,35 μm.

### 13.4 Track width

The nominal track width is 9,91 μm.

© ISO/IEC 2001 – All rights reserved

Copyright International Organization for Standardization
Provided by IHS under license with ISO
No reproduction or networking permitted without license from IHS
Not for Resale

### 13.5 Track angle

The nominal angle of each track with respect to the Tape Reference Edge shall be 4,902 5°.

### 13.6 Track length

The length of each track shall be 73,438 mm ± 0,220 mm.

### 13.7 Guard band

There shall be a guard band of width 905 μm ± 10 μm extending from the start of the recorded tracks to the Tape Reference Edge.

### 13.8 Azimuth angles

The positive azimuth angle shall be 20,009° ± 0,200°. The negative azimuth angle shall be 9,991° ± 0,200°.

### 13.9 Track linearity

The edge of each recorded track shall be contained between two parallel lines 6 μm apart. The parallel lines shall be at the nominal track angle with respect to the tape reference edge.

## 14 Layout of a tape

### 14.1 General

The layout of the tape is shown in figure 46. A tape shall consist of 1 to 255 partitions. The partitions shall be numbered sequentially with partition 0 being the first partition on the tape. The elements of the tape format are defined in the following clauses. Writing the entire tape with Erase Blocks shall erase a tape. When a tape is formatted, each partition shall contain a PBOP, LBOP and EOD.

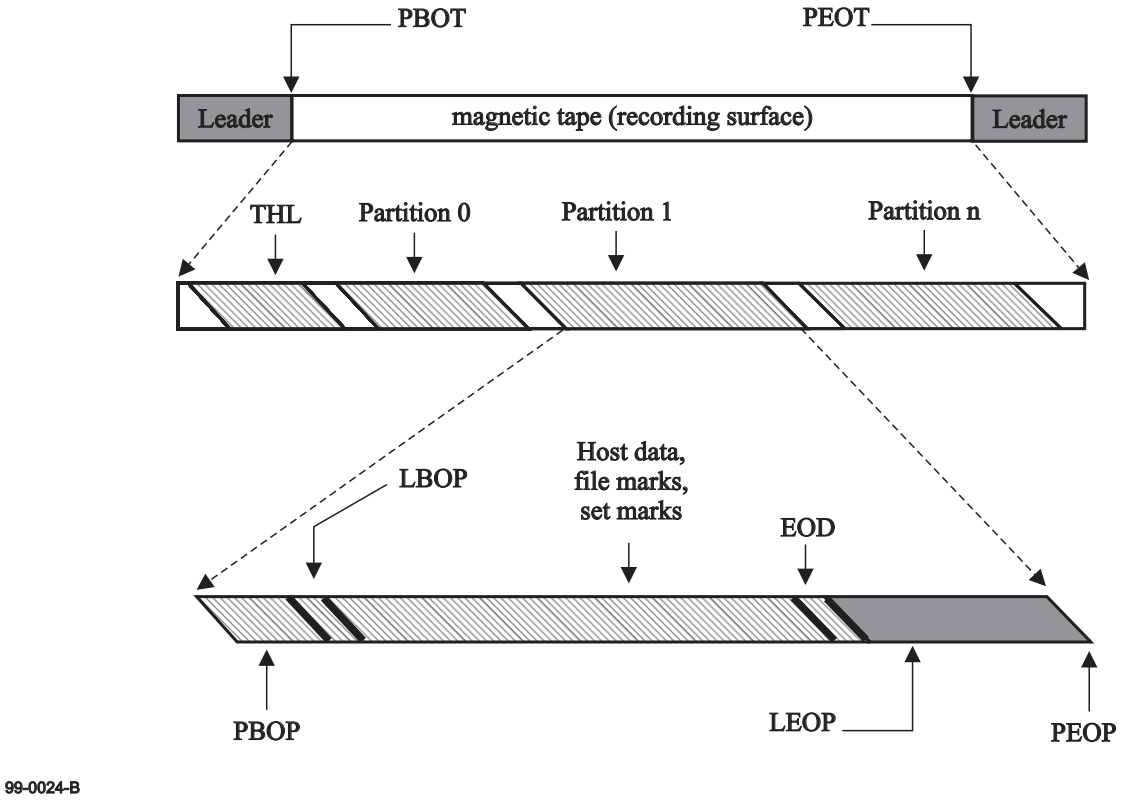


**Figure 46 - Tape layout**

### 14.2 Tape History Log (THL)

The THL have a partition number of (FF). Recording of the THL shall begin 518 mm ± 10 mm from PBOT. The THL shall consist of 50 tracks of PBOP Blocks followed by 50 tracks of LBOP Blocks. The first PBOP Block shall begin with track 1 and the PID of the first PBOP Block shall be set to (00000000). The contents of the THL are not defined by this International Standard and shall be ignored for interchange. The last data track shall be followed by 100 tracks of EOD Blocks.


© ISO/IEC 2001 – All rights reserved
Copyright International Organization for Standardization
Provided by IHS under license with ISO
No reproduction or networking permitted without license from IHS
Not for Resale

## 14.3 Physical Beginning of Partition

All partitions shall begin with a PBOP. The PBOP shall consist of 340 tracks of PBOP Blocks. The first PBOP track shall begin with track 1. All PBOP Block headers shall be identical except for the PID and the Rwtstat. The Rwtstat field shall be set to 0011 for the last two tracks. The PID shall specify the position on tape. The BID shall be set to (00000000).

## 14.4 Logical Beginning of Partition

The LBOP shall be recorded immediately following the PBOP. The LBOP shall consist of 460 tracks of LBOP Blocks. The BID of all LBOP Blocks shall be (0000000).

## 14.5 Data area

### 14.5.1 General

The data area shall be recorded immediately following the LBOP. The data area shall consist of Data blocks, Shutdown blocks and Gap blocks. When writing stops, a minimum of two Gap blocks followed by two Shutdown blocks shall be written ending with an even numbered track. When writing commences again, the two Shutdown blocks shall be overwritten with Gap blocks. File Marks and Set Marks shall be recorded at the request of the Host. Data blocks or Short File Mark blocks may be rewritten if they contain errors. The block headers of the rewritten physical blocks shall be identical to the original block headers with the exception of the PID that specifies the location on tape. The DBID field shall determine whether a physical block is rewritten further down the tape. Blocks may be rewritten multiple times.

### 14.5.2 Short File Mark

A Short File Mark shall consist of 1 Short File Mark Block.

### 14.5.3 Long File Mark

A Long File Mark shall consist of a minimum of 2 tracks of Gap Blocks followed by 2 tracks of Long File Mark Blocks followed by 2 more tracks of Gap Blocks. The first track of Long File Mark Blocks shall begin on track 1. All Long File Mark Blocks shall have the same BID. All Data Blocks shall be verified by RBC and rewritten before writing the Long File Mark.

### 14.5.4 Set Mark

A Set Mark shall consist of a minimum of 2 tracks of Gap Blocks followed by 2 tracks of Set Mark Blocks followed by 2 more tracks of Gap Blocks. The first track of Set Mark Blocks shall begin on track 1. All Set Mark Blocks shall have the same BID. All Data Blocks shall be verified by RBC and rewritten before writing the Set Mark.

## 14.6 End of Data

The EOD shall be written immediately after the data area. It shall consist of 2 tracks of Gap Blocks followed by 880 tracks of EOD Blocks. The data area may be appended to by writing over the EOD.

## 14.7 Physical End of Partition (PEOP)

The PEOP is not recorded on the tape. It is the end point of the partition and prevents data in one partition from overwriting the next partition. The PEOP PID shall be recorded in the LBOP Block. All writing of host data shall cease when the PID matches the PEOP PID. An additional 32 tracks shall be written following the PEOP PID. This International Standard does not specify the content of these tracks and they shall be ignored for interchange.

© ISO/IEC 2001 – All rights reserved

Copyright International Organization for Standardization
Provided by IHS under license with ISO
No reproduction or networking permitted without license from IHS
Not for Resale

# Annex A
(normative)

# Measurement of Light Transmittance of Tape and Leaders

## A.1 Introduction

The following description outlines the general principle of the measuring equipment and measuring method to be applied when measuring the light transmittance of tape.

For the purpose of this International Standard "light transmittance" is defined by convention as the relationship between the reading obtained from the measuring equipment with the test piece inserted and the reading obtained when no test piece is present. The transmittance value is expressed as the percentage ratio of the two readings.

## A.2 Description of the measuring equipment

The equipment shall consist of

— the radiation source;
— the radiation receiver;
— the measuring mask;
— the optical path;
— the measuring circuitry.

### A.2.1 Radiation source

An infrared light-emitting diode (LED) with the following parameters shall be used:

wavelength at peak emission : 850 nm ± 50 nm
half-power bandwidth : ± 50 nm

### A.2.2 Radiation receiver

A flat silicon photo diode shall be used. It shall be operated in the short circuit mode.

### A.2.3 Measuring mask

The measuring mask shall have a thickness of 2 mm and a circular aperture of diameter *d* such that the area is 80 % to 100 % of the active area of the photo diode.

The surface of the mask shall be matt black.

The test piece shall be held firmly against the mask to cover the aperture and to ensure that no ambient light leaks past.

### A.2.4 Optical path (figure A.1)

The optical path shall be perpendicular to the mask. The distance from the emitting surface of the LED to the mask shall be

$$L = \frac{d}{2\tan\alpha} \text{ mm}$$

where *d* is in mm and $\alpha$ is the angle where the relative intensity of the LED is equal to, or greater than, 95% of the maximum intensity of the optical axis.

### A.2.5 Finish

The whole assembly shall be enclosed in a matt black case.

### A.2.6 Measuring circuitry (figure A.2)

The components of the measuring circuitry are

E : regulated power supply with variable output voltage
R : current-limiting resistor
LED : light-emitting diode
Di : silicon photo diode

--`,,```,,,,````-`-`,,`,,`,`,,`---


© ISO/IEC 2001 – All rights reserved
Copyright International Organization for Standardization
Provided by IHS under license with ISO
No reproduction or networking permitted without license from IHS
Not for Resale

A : operational amplifier
$R_{f0}$, $R_{f1}$ : feedback resistors
S : gain switch
V : voltmeter

The forward current of the LED, and consequently its radiation power, can be varied by means of the power supply E.

Di is operating in the short circuit mode.

The output voltage of the operational amplifier is given by

$$V_0 = I_k \times R_f$$

where:

$I_k$ is the short-circuit current of Di.

The output voltage is therefore a linear function of the light intensity.

$R_{f0}$ and $R_{f1}$ shall be low temperature-drift resistors with an accuracy of 1%. The following ratio applies

$$\frac{R_{f0}}{R_{f1}} = \frac{1}{20}$$

## A.3 Measuring method

— Set switch S to position 0.

— With no test piece mounted vary the supply voltage of E until voltmeter V reads full scale (100 %).

— Mount a leader or trailer tape on the mask. The reading of the voltmeter shall be in the range 60 % to 100 %.

— Mount a test piece of magnetic tape on the mask. Set switch S to position 1. Full deflection of the voltmeter now represents a light transmittance of 5 %.

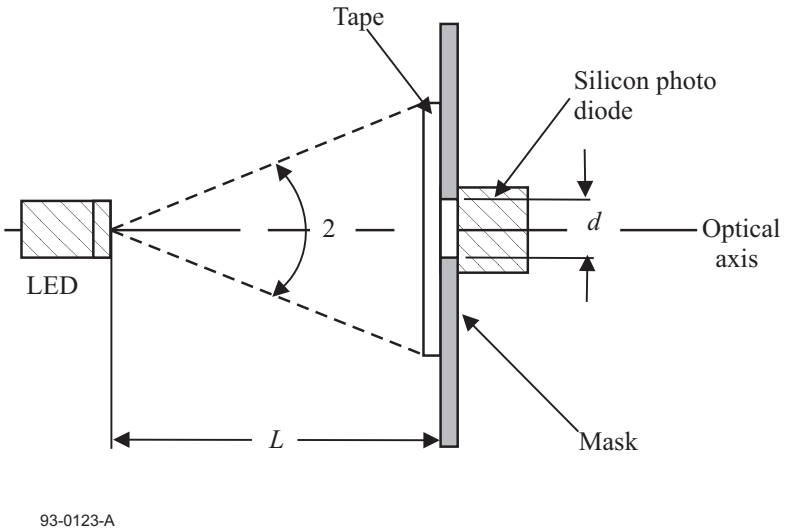


**Figure A.1 - Optical arrangement**

© ISO/IEC 2001 – All rights reserved

Copyright International Organization for Standardization
Provided by IHS under license with ISO
No reproduction or networking permitted without license from IHS
Not for Resale

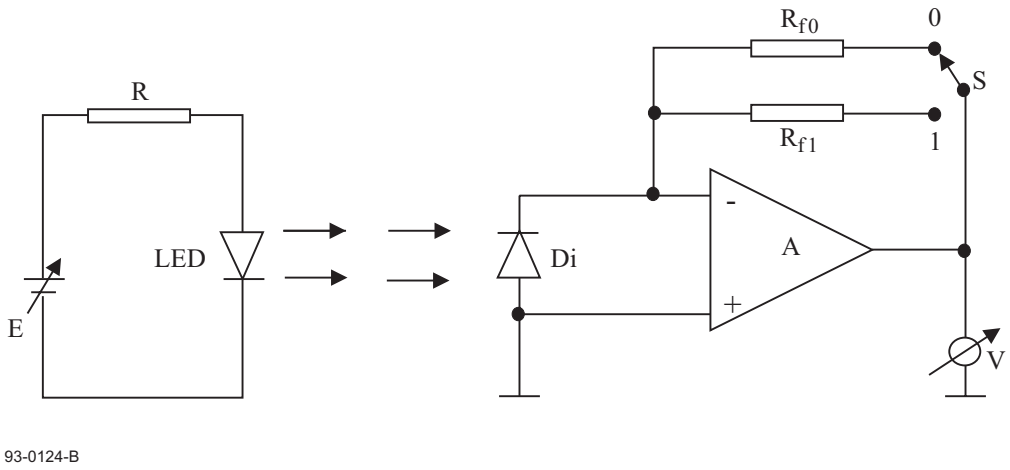


**Figure A.2 - Measuring circuitry**


© ISO/IEC 2001 – All rights reserved
Copyright International Organization for Standardization
Provided by IHS under license with ISO
No reproduction or networking permitted without license from IHS
Not for Resale

# Annex B
(normative)

## Tape abrasivity measurement procedure

### B.1 General

Tape abrasivity is the property of the tape to wear the tape transport

### B.2 Test fixture

Install a clean a wear bar as shown in figure B.1 on a holding fixture similar to that shown in figure B.2. The test edge facing upwards shall be unworn and free of chips or voids greater than 1μm in size. The radius of the test edge shall not exceed 13 μm.

The wear bar shall have the following weight percentages:

| | |
|---|---|
| Al | 5,4% |
| Si | 9,6% |
| Fe | 85,0% |

The surface finish on all four sides of the wear bar shall be at least of roughness grade N2, 0,05 μm.

The wear bar shall be square within 0,05 mm.

### B.3 Procedure

Install the test fixture (see B.2) on a tape transport so that the wrap angle of the tape over the bar is 15° on each side, for 30° of total wrap.

Set the tape tension at the wear bar to 0,13 N ± 0,02 N.

Set the relative humidity to 50% ± 10%.

With a tape speed of 25,4 mm/s, make 1 pass of the tape over the wear bar. The length of the tape passing over the wear bar shall be 39,5 m ± 0,5 m.

Remove the holding fixture from the tape transport and measure the length of the flat worn on the wear bar. This measurement shall be made using a microscope of 300x magnification, a camera, and a reference reticule.

Measurements shall be taken at the ¼, ½ and ¾ points of the width of the wear pattern. Take the average length calculated from the three readings. Figure B.3 shows a typical wear pattern and the points of measurement.

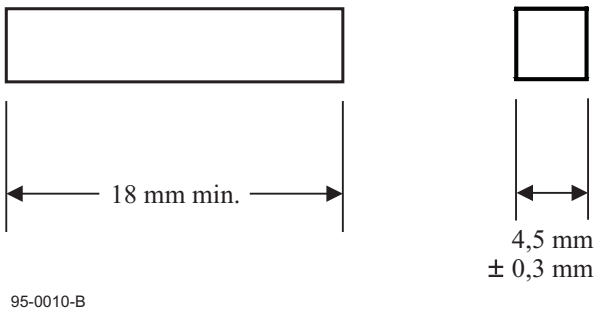


**Figure B.1 - Wear bar mounting fixture**

--`,,```,,,,````-`-`,,`,,`,`,,`---
© ISO/IEC 2001 - All rights reserved
Copyright International Organization for Standardization
Provided by IHS under license with ISO
No reproduction or networking permitted without license from IHS
Not for Resale

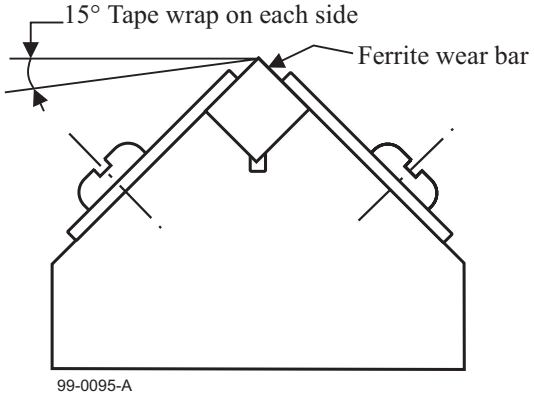


**Figure B.2 - Wear bar measurement**

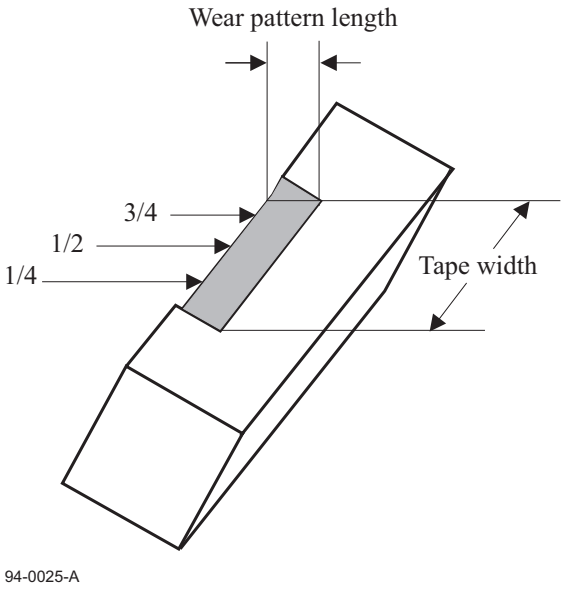


**Figure B.3 - Wear bar**


© ISO/IEC 2001 – All rights reserved
Copyright International Organization for Standardization
Provided by IHS under license with ISO
No reproduction or networking permitted without license from IHS
Not for Resale

# Annex C
(normative)

## Generation of the Logical Block CRC

The logical CRC shall be generated by the following generator polynomial over GF(2):

$$g(x) = x^{32} + x^{28} + x^{26} + x^{19} + x^{17} + x^{10} + x^{6} + x^{2} + 1$$

The logical CRC shall be the remainder obtained when by multiplying the information polynomial by $x^{32}$, and then dividing by *g(x)*. The highest order coefficient of the information polynomial shall be bit 7 of the first byte of data and the least order coefficient is bit 0 of the last byte of data.

The CRC polynomial shall be initialised with (FFFFFFFF) before shifting the information polynomial through the CRC register.

© ISO/IEC 2001 – All rights reserved

Copyright International Organization for Standardization
Provided by IHS under license with ISO
No reproduction or networking permitted without license from IHS
Not for Resale

# Annex D
(normative)

## ECC3 Check Bytes

The generator polynomial of an 8-bit Galois field shall be $g_f(x)$.

$$g_f(x) = x^8 + x^4 + x^3 + x^2 + 1$$

Each 8-bit byte Galois field element shall be generated by the above generator polynomial. Let $\alpha^0, \alpha^1, \alpha^2, \alpha^3, \ldots, \alpha^{254}$ denote the 255 non-zero elements generated by the field generator polynomial, $g_f(x)$. Then the ECC3 checkbytes shall be generated by the following generator polynomial:

$$g(x) = x^2 + \alpha^{25}x + \alpha^0$$

The ECC3 information polynomial shall be formed from the ECC3 blocks as follows. The first byte shall be the coefficient of the highest order term of the information polynomial. The last byte shall be the coefficient of the lowest order term of the information polynomial. The information polynomial shall be premultiplied by $x^2$, then divided by *g(x)*, to obtain a remainder. The remainder shall be the two ECC3 checkbytes.

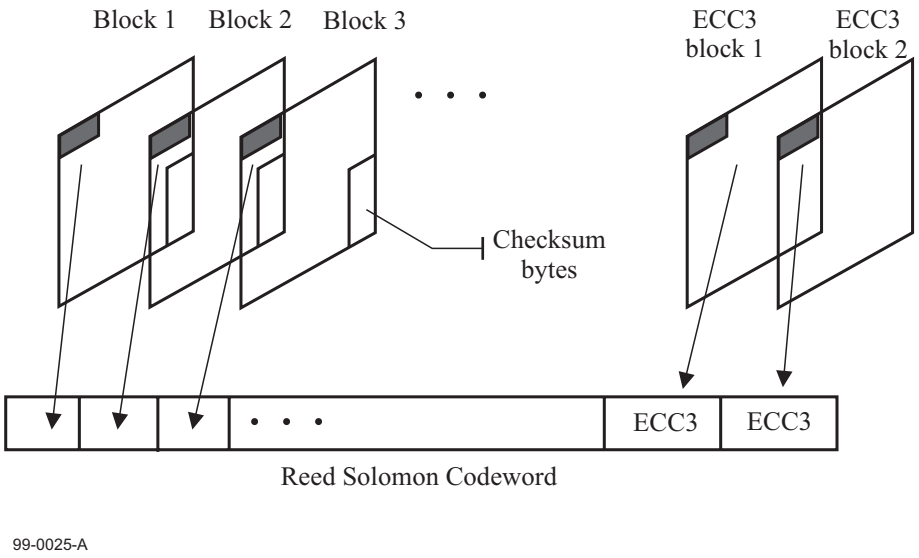


**Figure D.1 - ECC3 block**

The ECC3 code words shall be formed by taking corresponding bytes from each track. The physical header and CRC shall not be included in the ECC3 calculations. Each information polynomial shall contain the number of bytes in the ECC3 group (up to 253).


© ISO/IEC 2001 – All rights reserved
Copyright International Organization for Standardization
Provided by IHS under license with ISO
No reproduction or networking permitted without license from IHS
Not for Resale

# Annex E
(normative)

## Generation of the Data Area CRC

The generator polynomial for the data area CRC shall be a polynomial over GF(2) defined as

$$g(x) = x^{64} + x^{62} + x + 1$$

The 64-bit CRC register shall be initialized with (FFFFFFFFFFFFFFFF). The information polynomial shall be multiplied by $x^{64}$, then divided by the CRC generator polynomial. The information polynomial shall consist of the bytes starting with the first byte of the logical header and ending with the last byte of the checksum. Bit 7 of each byte corresponds to the highest coefficient of the byte, bit 0 to the lowest coefficient.

© ISO/IEC 2001 – All rights reserved

Copyright International Organization for Standardization
Provided by IHS under license with ISO
No reproduction or networking permitted without license from IHS
Not for Resale

# Annex F
(normative)

## Generation of the ECC

The generator polynomial of the Galois field GF($2^8$) shall be

$$g_f(x) = x^8 + x^4 + x^3 + x^2 + 1$$

Let $\alpha^0, \alpha^1, \alpha^2, \alpha^3, \ldots, \alpha^{254}$ be the 255 non-zero elements of this Galois field. Then the generator polynomial for the horizontal ECC checkbytes shall be defined as

$$g_h(x) = \prod_{i=0}^{11} (x - \alpha^i)$$

The generator polynomial for the vertical ECC checkbytes shall be defined as

$$g_v(x) = \prod_{i=0}^{15} (x - \alpha^i)$$

The checkbytes shall be obtained by forming an information polynomial $i(x)$ from the data bytes, premultiplying $i(x)$ by $x^{12}$ for horizontal ECC and by $x^{16}$ for vertical ECC, then dividing $i(x)$ by $g_h(x)$ and $g_v(x)$ respectively. The remainder of this division shall be the checkbytes. The lowest order coefficient of the remainder is the highest numbered checkbyte, and the highest order coefficient is the lowest numbered checkbyte.


© ISO/IEC 2001 – All rights reserved
Copyright International Organization for Standardization
Provided by IHS under license with ISO
No reproduction or networking permitted without license from IHS
Not for Resale

# Annex G
(normative)

## Pre-coder

The data stream shall be pre-coded according to the following algorithm before writing. The output bit shall be the product of an exclusive OR operation of the input bit and the output bit that has been delayed by 2 bits as shown in figure G.1. The initial state of the pre-coder shall be ZERO ZERO.

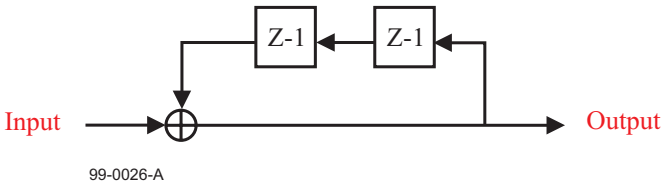


**Figure G.1 – Pre-code**

© ISO/IEC 2001 – All rights reserved
Copyright International Organization for Standardization
Provided by IHS under license with ISO
No reproduction or networking permitted without license from IHS
Not for Resale

# Annex H
(normative)

## Representation of 8-bit bytes by 10-bit patterns

The following algorithm shall be used for 8-bit to 10-bit conversion. The choice of the table 1 pattern or the table 2 pattern shall be based on the charge of the previously recorded bits on the track. The charge shall be computed starting with 0 at the beginning of each, by taking the difference in the numbers of ONEs and the number of ZEROs of the pre-coded data steam. The pattern shall be selected such that the pre-coded value of the pattern shall minimise the absolute value of the charge.

The left most bit of the input and the encoder table entry correspond to the first bit to be recorded on tape.

| Byte (dec) | Byte (hex) | Table 1 Pattern | Table 2 Pattern |
|---|---|---|---|
| 0 | (00) | 1010111111 | 1010111111 |
| 1 | (01) | 1011010001 | 1011010001 |
| 2 | (02) | 1011010011 | 1011010011 |
| 3 | (03) | 1011010110 | 1011010110 |
| 4 | (04) | 1011100010 | 1011100010 |
| 5 | (05) | 1011100101 | 1011100101 |
| 6 | (06) | 1011100111 | 1011100111 |
| 7 | (07) | 1011101010 | 1011101010 |
| 8 | (08) | 1011101101 | 1011101101 |
| 9 | (09) | 1011101111 | 1011101111 |
| 10 | (0A) | 1011111001 | 1011111001 |
| 11 | (0B) | 1011111110 | 1011111110 |
| 12 | (0C) | 1100010001 | 1100010001 |
| 13 | (0D) | 1100010011 | 1100010011 |
| 14 | (0E) | 1100010110 | 1100010110 |
| 15 | (0F) | 1100100010 | 1100100010 |
| 16 | (10) | 1100100101 | 1100100101 |
| 17 | (11) | 1100100111 | 1100100111 |
| 18 | (12) | 1100101010 | 1100101010 |
| 19 | (13) | 1100101101 | 1100101101 |
| 20 | (14) | 1100101111 | 1100101111 |
| 21 | (15) | 1100111001 | 1100111001 |
| 22 | (16) | 1100111011 | 1100111011 |
| 23 | (17) | 1100111110 | 1100111110 |
| 24 | (18) | 1101001001 | 1101001001 |
| 25 | (19) | 1101001011 | 1101001011 |
| 26 | (1A) | 1101001110 | 1101001110 |
| 27 | (1B) | 1101010010 | 1101010010 |
| 28 | (1C) | 1101010101 | 1101010101 |
| 29 | (1D) | 1101010111 | 1101010111 |


© ISO/IEC 2001 – All rights reserved
Copyright International Organization for Standardization
Provided by IHS under license with ISO
No reproduction or networking permitted without license from IHS
Not for Resale

| Byte (dec) | Byte (hex) | Table 1 Pattern | Table 2 Pattern |
|---|---|---|---|
| 30 | (1E) | 1101011010 | 1101011010 |
| 31 | (1F) | 1101011101 | 1101011101 |
| 32 | (20) | 1101011111 | 1101011111 |
| 33 | (21) | 1101101001 | 1101101001 |
| 34 | (22) | 1101101011 | 1101101011 |
| 35 | (23) | 1101101110 | 1101101110 |
| 36 | (24) | 1101110010 | 1101110010 |
| 37 | (25) | 1101110101 | 1101110101 |
| 38 | (26) | 1101110111 | 1101110111 |
| 39 | (27) | 1101111010 | 1101111010 |
| 40 | (28) | 1101111101 | 1101111101 |
| 41 | (29) | 1101111111 | 1101111111 |
| 42 | (2A) | 1110010001 | 1110010001 |
| 43 | (2B) | 1110010011 | 1110010011 |
| 44 | (2C) | 1110010110 | 1110010110 |
| 45 | (2D) | 1110100010 | 1110100010 |
| 46 | (2E) | 1110100101 | 1110100101 |
| 47 | (2F) | 1110100111 | 1110100111 |
| 48 | (30) | 1110101010 | 1110101010 |
| 49 | (31) | 1110101101 | 1110101101 |
| 50 | (32) | 1110101111 | 1110101111 |
| 51 | (33) | 1110111001 | 1110111001 |
| 52 | (34) | 1110111011 | 1110111011 |
| 53 | (35) | 1110111110 | 1110111110 |
| 54 | (36) | 1111001001 | 1111001001 |
| 55 | (37) | 1111001011 | 1111001011 |
| 56 | (38) | 1111001110 | 1111001110 |
| 57 | (39) | 1111010010 | 1111010010 |
| 58 | (3A) | 1111010101 | 1111010101 |
| 59 | (3B) | 1111010111 | 1111010111 |
| 60 | (3C) | 1111011010 | 1111011010 |
| 61 | (3D) | 1111011101 | 1111011101 |
| 62 | (3E) | 1111011111 | 1111011111 |
| 63 | (3F) | 1111101001 | 1111101001 |
| 64 | (40) | 1111101011 | 1111101011 |
| 65 | (41) | 1111101110 | 1111101110 |
| 66 | (42) | 1111110010 | 1111110010 |
| 67 | (43) | 1111110101 | 1111110101 |
| 68 | (44) | 1111110111 | 1111110111 |
| 69 | (45) | 1111111010 | 1111111010 |
| 70 | (46) | 0110110010 | 1110011010 |
| 71 | (47) | 1010011001 | 1110110010 |
| 72 | (48) | 0010001001 | 0010001001 |

© ISO/IEC 2001 – All rights reserved

Copyright International Organization for Standardization
Provided by IHS under license with ISO
No reproduction or networking permitted without license from IHS
Not for Resale

| Byte (dec) | Byte (hex) | Table 1 Pattern | Table 2 Pattern |
|---|---|---|---|
| 73 | (49) | 0010001011 | 0010001011 |
| 74 | (4A) | 0010001110 | 0010001110 |
| 75 | (4B) | 0010010010 | 0010010010 |
| 76 | (4C) | 0010010101 | 0010010101 |
| 77 | (4D) | 0010010111 | 0010010111 |
| 78 | (4E) | 0010011010 | 0010011010 |
| 79 | (4F) | 0010011101 | 0010011101 |
| 80 | (50) | 0010011111 | 0010011111 |
| 81 | (51) | 0010101001 | 0010101001 |
| 82 | (52) | 0010110010 | 0010110010 |
| 83 | (53) | 0011010001 | 0011010001 |
| 84 | (54) | 0011010011 | 0011010011 |
| 85 | (55) | 0011100010 | 0011100010 |
| 86 | (56) | 0011100101 | 0011100101 |
| 87 | (57) | 0011100111 | 0011100111 |
| 88 | (58) | 0011111001 | 0011111001 |
| 89 | (59) | 0100010001 | 0100010001 |
| 90 | (5A) | 0100010011 | 0100010011 |
| 91 | (5B) | 0100010110 | 0100010110 |
| 92 | (5C) | 0100100010 | 0100100010 |
| 93 | (5D) | 0100100101 | 0100100101 |
| 94 | (5E) | 0100100111 | 0100100111 |
| 95 | (5F) | 0100101010 | 0100101010 |
| 96 | (60) | 0100101101 | 0100101101 |
| 97 | (61) | 0100101111 | 0100101111 |
| 98 | (62) | 0100111001 | 0100111001 |
| 99 | (63) | 0100111011 | 0100111011 |
| 100 | (64) | 0100111110 | 0100111110 |
| 101 | (65) | 0101001001 | 0101001001 |
| 102 | (66) | 0101001011 | 0101001011 |
| 103 | (67) | 0101001110 | 0101001110 |
| 104 | (68) | 0101010010 | 0101010010 |
| 105 | (69) | 0101101001 | 0101101001 |
| 106 | (6A) | 0101110010 | 0101110010 |
| 107 | (6B) | 0110010001 | 0110010001 |
| 108 | (6C) | 0110010011 | 0110010011 |
| 109 | (6D) | 0110010110 | 0110010110 |
| 110 | (6E) | 0110100010 | 0110100010 |
| 111 | (6F) | 0110100101 | 0110100101 |
| 112 | (70) | 0110100111 | 0110100111 |
| 113 | (71) | 0110111001 | 0110111001 |
| 114 | (72) | 0111001001 | 0111001001 |
| 115 | (73) | 0111001011 | 0111001011 |


© ISO/IEC 2001 – All rights reserved
Copyright International Organization for Standardization
Provided by IHS under license with ISO
No reproduction or networking permitted without license from IHS
Not for Resale

| Byte (dec) | Byte (hex) | Table 1 Pattern | Table 2 Pattern |
|---|---|---|---|
| 116 | (74) | 0111001110 | 0111001110 |
| 117 | (75) | 0111010010 | 0111010010 |
| 118 | (76) | 0111101001 | 0111101001 |
| 119 | (77) | 0111110010 | 0111110010 |
| 120 | (78) | 1000100011 | 1000100011 |
| 121 | (79) | 1000100110 | 1000100110 |
| 122 | (7A) | 1001000101 | 1001000101 |
| 123 | (7B) | 1001000111 | 1001000111 |
| 124 | (7C) | 1001001010 | 1001001010 |
| 125 | (7D) | 1001001101 | 1001001101 |
| 126 | (7E) | 1001001111 | 1001001111 |
| 127 | (7F) | 1001011001 | 1001011001 |
| 128 | (80) | 1001011011 | 1001011011 |
| 129 | (81) | 1001011110 | 1001011110 |
| 130 | (82) | 1001110001 | 1001110001 |
| 131 | (83) | 1001110011 | 1001110011 |
| 132 | (84) | 1001110110 | 1001110110 |
| 133 | (85) | 1010001001 | 1010001001 |
| 134 | (86) | 1010001011 | 1010001011 |
| 135 | (87) | 1010001110 | 1010001110 |
| 136 | (88) | 1010010010 | 1010010010 |
| 137 | (89) | 1010010101 | 1010010101 |
| 138 | (8A) | 1010010111 | 1010010111 |
| 139 | (8B) | 1010011010 | 1010011010 |
| 140 | (8C) | 1010011101 | 1010011101 |
| 141 | (8D) | 1010011111 | 1010011111 |
| 142 | (8E) | 1010101001 | 1010101001 |
| 143 | (8F) | 1010110010 | 1010110010 |
| 144 | (90) | 1101100101 | 1001001001 |
| 145 | (91) | 1101100111 | 1001001011 |
| 146 | (92) | 1101101010 | 1001001110 |
| 147 | (93) | 1101101101 | 1001010010 |
| 148 | (94) | 1101101111 | 1001010101 |
| 149 | (95) | 1101111001 | 1001010111 |
| 150 | (96) | 1101111011 | 1001011010 |
| 151 | (97) | 1101111110 | 1001011101 |
| 152 | (98) | 1110100011 | 1001011111 |
| 153 | (99) | 1110100110 | 1001101001 |
| 154 | (9A) | 1111000101 | 1001101011 |
| 155 | (9B) | 1111000111 | 1001101110 |
| 156 | (9C) | 1111001010 | 1001110010 |
| 157 | (9D) | 1111001101 | 1001110101 |
| 158 | (9E) | 1111001111 | 1001110111 |

© ISO/IEC 2001 – All rights reserved

Copyright International Organization for Standardization
Provided by IHS under license with ISO
No reproduction or networking permitted without license from IHS
Not for Resale

| Byte (dec) | Byte (hex) | Table 1 Pattern | Table 2 Pattern |
|---|---|---|---|
| 159 | (9F) | 1111011001 | 1001111010 |
| 160 | (A0) | 1111011011 | 1001111101 |
| 161 | (A1) | 1111011110 | 1001111111 |
| 162 | (A2) | 1111110001 | 1010010011 |
| 163 | (A3) | 1111110011 | 1010010110 |
| 164 | (A4) | 1111110110 | 1010100101 |
| 165 | (A5) | 0010010001 | 1010100111 |
| 166 | (A6) | 0010010011 | 1010101010 |
| 167 | (A7) | 0010010110 | 1010101111 |
| 168 | (A8) | 0010100101 | 1010111001 |
| 169 | (A9) | 0010100111 | 1010111110 |
| 170 | (AA) | 0010101010 | 1011001001 |
| 171 | (AB) | 0010101101 | 1011001011 |
| 172 | (AC) | 0010101111 | 1011001110 |
| 173 | (AD) | 0010111001 | 1011010010 |
| 174 | (AE) | 0010111011 | 1011010111 |
| 175 | (AF) | 0010111110 | 1011011010 |
| 176 | (B0) | 0011001001 | 1011011101 |
| 177 | (B1) | 0011001011 | 1011011111 |
| 178 | (B2) | 0011001110 | 1011101001 |
| 179 | (B3) | 0011010010 | 1011101011 |
| 180 | (B4) | 0011010101 | 1011101110 |
| 181 | (B5) | 0011010111 | 1011110010 |
| 182 | (B6) | 0011011010 | 1011110101 |
| 183 | (B7) | 0011011101 | 1011110111 |
| 184 | (B8) | 0011011111 | 1011111010 |
| 185 | (B9) | 0011101001 | 1011111101 |
| 186 | (BA) | 0011101011 | 1011111111 |
| 187 | (BB) | 0011101110 | 1100100011 |
| 188 | (BC) | 0011110010 | 1100100110 |
| 189 | (BD) | 0011110101 | 1101001010 |
| 190 | (BE) | 0011110111 | 1101001101 |
| 191 | (BF) | 0011111010 | 1101001111 |
| 192 | (C0) | 0011111101 | 1101011001 |
| 193 | (C1) | 0011111111 | 1101011011 |
| 194 | (C2) | 0100100011 | 1101011110 |
| 195 | (C3) | 0100100110 | 1101110011 |
| 196 | (C4) | 0101000101 | 1101110110 |
| 197 | (C5) | 0101000111 | 1110010010 |
| 198 | (C6) | 0101001010 | 1110010101 |
| 199 | (C7) | 0101001101 | 1110010111 |
| 200 | (C8) | 0101001111 | 1110011101 |
| 201 | (C9) | 0101011001 | 1110011111 |


© ISO/IEC 2001 – All rights reserved
Copyright International Organization for Standardization
Provided by IHS under license with ISO
No reproduction or networking permitted without license from IHS
Not for Resale

| Byte (dec) | Byte (hex) | Table 1 Pattern | Table 2 Pattern |
|---|---|---|---|
| 202 | (CA) | 0101011011 | 1110101001 |
| 203 | (CB) | 0101011110 | 1110101011 |
| 204 | (CC) | 0101110001 | 1110101110 |
| 205 | (CD) | 0101110011 | 1110110101 |
| 206 | (CE) | 0101110110 | 1110110111 |
| 207 | (CF) | 0110010010 | 1110111010 |
| 208 | (D0) | 0110010101 | 1110111101 |
| 209 | (D1) | 0110010111 | 1110111111 |
| 210 | (D2) | 0110011101 | 1111010011 |
| 211 | (D3) | 0110011111 | 1111010110 |
| 212 | (D4) | 0110101001 | 1111100101 |
| 213 | (D5) | 0110101011 | 1111100111 |
| 214 | (D6) | 0110101110 | 1111101010 |
| 215 | (D7) | 0110110101 | 1111101101 |
| 216 | (D8) | 0110110111 | 1111101111 |
| 217 | (D9) | 0110111010 | 1111111001 |
| 218 | (DA) | 0110111101 | 1111111011 |
| 219 | (DB) | 0110111111 | 0010001010 |
| 220 | (DC) | 0111010001 | 0010001111 |
| 221 | (DD) | 0111010011 | 0010011011 |
| 222 | (DE) | 0111010110 | 0010011110 |
| 223 | (DF) | 0111100010 | 0010110011 |
| 224 | (E0) | 0111100101 | 0010110110 |
| 225 | (E1) | 0111100111 | 0011100011 |
| 226 | (E2) | 0111101010 | 0011100110 |
| 227 | (E3) | 0111101101 | 0100101001 |
| 228 | (E4) | 0111101111 | 0100101011 |
| 229 | (E5) | 0111111001 | 0100101110 |
| 230 | (E6) | 0111111011 | 0100110101 |
| 231 | (E7) | 0111111110 | 0100110111 |
| 232 | (E8) | 1010001010 | 0100111010 |
| 233 | (E9) | 1010001111 | 0100111101 |
| 234 | (EA) | 1010011011 | 0100111111 |
| 235 | (EB) | 1010011110 | 0101010011 |
| 236 | (EC) | 1010110011 | 0101010110 |
| 237 | (ED) | 1010110110 | 0101100101 |
| 238 | (EE) | 1011100011 | 0101100111 |
| 239 | (EF) | 1011100110 | 0101101010 |
| 240 | (F0) | 1100010010 | 0101101101 |
| 241 | (F1) | 1100010101 | 0101101111 |
| 242 | (F2) | 1100010111 | 0101111001 |
| 243 | (F3) | 1100011101 | 0101111011 |
| 244 | (F4) | 1100011111 | 0101111110 |

© ISO/IEC 2001 – All rights reserved

Copyright International Organization for Standardization
Provided by IHS under license with ISO
No reproduction or networking permitted without license from IHS
Not for Resale

| Byte (dec) | Byte (hex) | Table 1 Pattern | Table 2 Pattern |
|---|---|---|---|
| 245 | (F5) | 1100101001 | 0110100011 |
| 246 | (F6) | 1100101011 | 0110100110 |
| 247 | (F7) | 1100101110 | 0111001010 |
| 248 | (F8) | 1100110101 | 0111001101 |
| 249 | (F9) | 1100110111 | 0111001111 |
| 250 | (FA) | 1100111010 | 0111011001 |
| 251 | (FB) | 1100111101 | 0111011011 |
| 252 | (FC) | 1100111111 | 0111011110 |
| 253 | (FD) | 1101010001 | 0111110011 |
| 254 | (FE) | 1101010011 | 0111110110 |
| 255 | (FF) | 1101010110 | 1000111011 |


© ISO/IEC 2001 – All rights reserved
Copyright International Organization for Standardization
Provided by IHS under license with ISO
No reproduction or networking permitted without license from IHS
Not for Resale

# Annex J
(normative)

# Randomisation

The bytes from each information matrix row shall be submitted to an exclusive OR operation together with the content of the shift register shown in figure J.1. Before each new row is processed, the shift register shall be set with the one's complement of the hexadecimal value of the Row ID. The shift register shall be clocked 1 bit between subsequent bytes of the row.

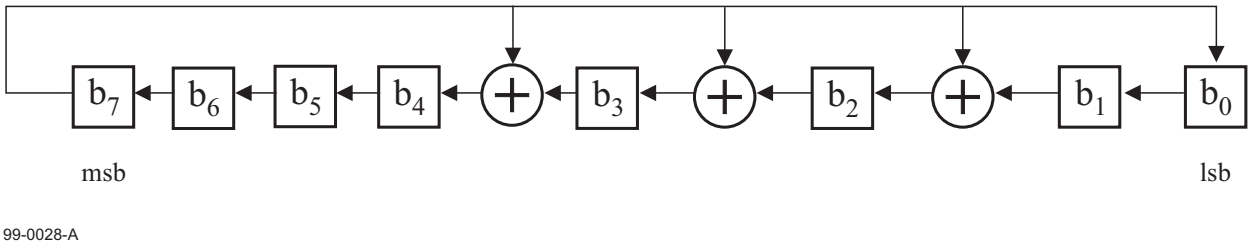


**Figure J.1 - Randomisation shift register**

© ISO/IEC 2001 - All rights reserved

Copyright International Organization for Standardization
Provided by IHS under license with ISO
No reproduction or networking permitted without license from IHS
Not for Resale

# Annex K
(normative)

## Generation of the Search Field CRC

The search field CRC shall be generated by the following generator polynomial

$$g(x) = x^{16} + x^{12} + x^5 + 1$$

The information polynomial shall be over GF(2) and shall be formed from all the bits of the search field bytes as follows. The first byte of the search field forms the highest order coefficients and the last byte forms the lowest order coefficients. Within each byte bit 7 shall be the highest order coefficient and bit 0 shall be the lowest order coefficient. The information polynomial shall be multiplied by $x^{16}$, then divided by g(x) The remainder shall be the 16-bit CRC. The CRC register is initialised with (FFFF) for each search field.


© ISO/IEC 2001 – All rights reserved
Copyright International Organization for Standardization
Provided by IHS under license with ISO
No reproduction or networking permitted without license from IHS
Not for Resale

# Annex L
(normative)

## The **Search Field ECC**

The checkbytes for the search field ECC shall be a Reed Solomon code. The field generator polynomial shall be defined as follows:

$$g_f(x) = x^8 + x^4 + x^3 + x^2 + 1$$

The ECC generator polynomial shall be defined as

$$g_{sf}(x) = \prod_{i=0}^{7}\left(x - \alpha^i\right)$$

The checkbytes shall be obtained by forming an information polynomial from the 32 search field bytes plus 2 CRC bytes. The first byte of the search fields is the highest order coefficient, and the 34$^{th}$ byte is the lowest order coefficient. The information polynomial shall be multiplied by $x^8$ and then divided by $g_{sf}(x)$. The remainder polynomial shall be the search field checkbytes. The highest order coefficient shall be the lowest numbered checkbyte, and the lowest order coefficient of the remainder shall be the highest numbered checkbyte.

--`,,```,,,,````-`-`,,`,,`,`,,`---

© ISO/IEC 2001 – All rights reserved

Copyright International Organization for Standardization
Provided by IHS under license with ISO
No reproduction or networking permitted without license from IHS
Not for Resale

# Annex M

(normative)

# Measurement of bit shift

The tape to be measured shall have been written by the tape drive used for data interchange.

## M.1 Reading equipment

The following test shall be performed under the requirements listed in clause 10 of this International Standard.

There are no absolute requirements placed on the output voltage of the head. However, the head design, the rotary transformer, the pre-amplifier, the head-to-tape speed and the equaliser shall be chosen so as to avoid problems due to a low signal-to-noise ratio.

## M.2 Measurement method

Bit shift shall be measured using computational signal processing of a digitised record of the playback voltage waveform at the equaliser output. The signal capture period shall start with the first bit of the Physical Data Block and finish when at least 25 000 Channel bits of the Physical Data Block have been read.

The signal processing algorithm shall perform the following steps

1) Input the digitised waveform from the Physical Data Block into a timing extraction algorithm, e.g. a Fast Fourier Transform, which generates a series of fixed-interval time references for the nominal centres of the bit periods of the readback Channel bit signals from this zone. These references shall be sufficiently accurate that, when steps 2), 3) and 4) are executed, the bit error rate specified in 4) is achieved.

2) Extend this series of time references, at the same frequency and phase, into the remainder of the signal capture period. These references define the timing of the nominal centres of the bit periods of the readback Channel bit signals from the Physical Data Block.

3) Measure the playback voltage, to an accuracy of better than 2 %, at the nominal centre of each captured bit period from the Physical Data Block.

4) For each captured bit period from the Physical Data Block, deduce the state of the corresponding bit cell on the tape under test, by means of a detection method which has a bit error rate of less than 1 in 10 000. For each bit cell that is magnetised in the direction of head travel, assign to it a data value $D$ of +1. For each bit cell that is magnetised in the direction opposite to head travel, assign to it a data value $D$ of -1.

5) For each bit cell, form a vector of 4 elements. The elements shall be numbered 1, 2, 3 and 4. The value $D_3$ of the third element shall be the data value $D$ of the current bit cell. The value $D_4$ of the fourth element shall be the data value $D$ of the next bit cell. The values $D_1$ and $D_2$ respectively of the first and second elements shall be the data values $D$ of the previous two bit cells. Thus, the vector has a vector value $i$ which is one of a set of 16 possible vector values.

6) For each of the 16 vector values, compute the average $V_i$ of the playback voltages, measured in step 3), of all bit cells whose vectors have that vector value $i$.

7) Arrange the voltage averages and the data values to form 16 Volterra series, one per vector value. Each series shall be as defined below :

$$
\begin{aligned}
V_i = \quad & A_{0000} && \text{(d.c. term)}\\
& + A_{0100}\,D_2 + A_{0010}\,D_3 && \text{(signal terms)}\\
& + A_{1000}\,D_1 + A_{0001}\,D_4 && \text{(linear ISI terms)}\\
& + A_{1100}\,D_1\,D_2 + A_{0110}\,D_2\,D_3 + A_{0011}\,D_3\,D_4 && \text{(non-linear ISI terms)}\\
& + A_{1010}\,D_1\,D_3 + A_{0101}\,D_2\,D_4 + A_{1001}\,D_1\,D_4 && \text{(more non-linear ISI terms)}\\
& + A_{1101}\,D_1\,D_2\,D_4 + A_{1011}\,D_1\,D_3\,D_4 + A_{1111}\,D_1\,D_2\,D_3\,D_4 && \text{(more non-linear ISI terms)}
\end{aligned}
$$



--`,,```,,,,````-`-`,,`,,`,`,,`---

© ISO/IEC 2001 – All rights reserved

Copyright International Organization for Standardization
Provided by IHS under license with ISO
No reproduction or networking permitted without license from IHS

Not for Resale

$+ A_{1110}\, D_1\, D_2\, D_3 \; + A_{0111}\, D_2\, D_3\, D_4$ (non-linear ISI terms associated with bit shift)

8) Obtain the Volterra coefficients $A_{0000}$ to $A_{1111}$ by solving the 16 simultaneous equations formed in step 7).

9) The Volterra coefficients which indicate non-linear inter-symbol interference corresponding to bit shift are $A_{1110}$ and $A_{0111}$.

*Note*

*The theoretical basis for this method is described in*

*Newby, P. and Wood, R., 1986*

*"The Effects of Nonlinear Distortion on Class IV Partial Response"*

*IEEE Transactions on Magnetics*

*Volume MAG-22, Number 5, September 1986, Page 1203*

*and an application of this method is described in*

*Williams, C.H., 1990*

*"The Measurement and Classification of Impairment for DVTR Transports"*

*8th Conference on Video, Audio and Data Recording*

*IEE Conference Publication No. 319, page 67*

© ISO/IEC 2001 – All rights reserved

Copyright International Organization for Standardization
Provided by IHS under license with ISO
No reproduction or networking permitted without license from IHS
Not for Resale

# Annex N
(informative)

# Recommendations for transportation

## N.1 Environment

It is recommended that during transportation the cartridges are kept within the following conditions:

Temperature: - 40 °C to 45 °C

Relative humidity: 5 % to 80 %

Maximum wet bulb temperature: 26 °C

There should be no condensation in or on the cartridge.

## N.2 Hazards

Transportation of tape cartridges involves three basic potential hazards.

### N.2.1 Impact loads and vibrations

The following recommendations should minimise damage to tape cartridges during transportation:

— Avoid mechanical loads that would distort the cartridge shape.

— Avoid dropping the cartridge more than 1,0 m.

— Cartridges should be fitted into a rigid box containing adequate shock-absorbent material.

— The final box should have a clean interior and a construction that provides sealing to prevent the ingress of dirt and water.

— The orientation of the cartridges inside the final box should be such that the axes of the tape reels are horizontal.

— The final box should be clearly marked to indicate its correct orientation.

### N.2.2 Extremes of temperature and humidity

Extreme changes in temperature and humidity should be avoided whenever possible. Whenever a cartridge is received it should be conditioned in the operating environment for a period of at least 24 h.

### N.2.3 Effects of stray magnetic fields

A nominal spacing of not less than 80 mm should exist between the cartridge and the outer surface of the shipping container to minimise the risk of corruption.


© ISO/IEC 2001 – All rights reserved
Copyright International Organization for Standardization
Provided by IHS under license with ISO
No reproduction or networking permitted without license from IHS
Not for Resale

**ICS 35.220.23**

Price based on 82 pages

© ISO/IEC 2001 – All rights reserved

Copyright International Organization for Standardization
Provided by IHS under license with ISO
No reproduction or networking permitted without license from IHS

Not for Resale