INTERNATIONAL STANDARD

ISO/IEC 18809

First edition
2000-12-15

Information technology — 8 mm wide magnetic tape cartridge for information interchange — Helical scan recording AIT-1 with MIC format

Technologies de l'information — Cartouche à bande magnétique de 8 mm *de large pour l'échange d'information — Enregistrement par balayage en spirale AIT-1 avec format MIC*

Reference number
ISO/IEC 18809:2000(E)

© ISO/IEC 2000

Copyright International Organization for Standardization
Provided by IHS under license with ISO
No reproduction or networking permitted without license from IHS

Not for Resale

PDF disclaimer

This PDF file may contain embedded typefaces. In accordance with Adobe's licensing policy, this file may be printed or viewed but shall not be edited unless the typefaces which are embedded are licensed to and installed on the computer performing the editing. In downloading this file, parties accept therein the responsibility of not infringing Adobe's licensing policy. The ISO Central Secretariat accepts no liability in this area.

Adobe is a trademark of Adobe Systems Incorporated.

Details of the software products used to create this PDF file can be found in the General Info relative to the file; the PDF-creation parameters were optimized for printing. Every care has been taken to ensure that the file is suitable for use by ISO member bodies. In the unlikely event that a problem relating to it is found, please inform the Central Secretariat at the address given below.

© ISO/IEC 2000

All rights reserved. Unless otherwise specified, no part of this publication may be reproduced or utilized in any form or by any means, electronic or mechanical, including photocopying and microfilm, without permission in writing from either ISO at the address below or ISO's member body in the country of the requester.

ISO copyright office
Case postale 56 • CH-1211 Geneva 20
Tel. + 41 22 749 01 11
Fax + 41 22 749 09 47
E-mail copyright@iso.ch
Web www.iso.ch

Printed in Switzerland

--`,,```,,,,````-`-`,,`,,`,`,,`---

© ISO/IEC 2000 – All rights reserved
Copyright International Organization for Standardization
Provided by IHS under license with ISO
No reproduction or networking permitted without license from IHS
Not for Resale

Contents

Section 1 - General **1**

1 Scope **1**

2 Conformance **1**

2.1 Magnetic tape cartridge **1**
2.2 Generating drive **1**
2.3 Receiving drive **1**

3 Normative references **2**

4 Terms and definitions **2**

4.1 Absolute Frame Number (AFN) **2**
4.2 a.c. erase **2**
4.3 Access **2**
4.4 algorithm **2**
4.5 Area ID **2**
4.6 Automatic Track Finding (ATF) **2**
4.7 Average Signal Amplitude **2**
4.8 azimuth **2**
4.9 back surface **2**
4.10 byte **2**
4.11 cartridge **2**
4.12 Channel bit **2**
4.13 Codeword **2**
4.14 Early Warning Point (EWP) **2**
4.15 End of Data (EOD) **2**
4.16 Entity **2**
4.17 Error Correcting Code (ECC) **2**
4.18 flux transition position **2**
4.19 flux transition spacing **2**
4.20 Frame **3**
4.21 Housekeeping Frame **3**
4.22 Logical Beginning of Tape (LBOT) **3**
4.23 magnetic tape **3**
4.24 Master Standard Amplitude Calibration Tape **3**
4.25 Master Standard Reference Tape **3**
4.26 Memory In Cartridge (MIC) **3**
4.27 Partition Boundary **3**
4.28 Physical Beginning of Tape (PBOT) **3**
4.29 Physical End of Tape (PEOT). **3**
4.30 physical recording density **3**
4.31 pre-recording condition **3**
4.32 processing **3**
4.33 processed data **3**
4.34 Processed Record **3**
4.35 record **3**
4.36 Reference Field **3**
4.37 Secondary Standard Amplitude Calibration Tape **3**
4.38 Secondary Standard Reference Tape **3**
4.39 Separator Mark **3**
4.40 Standard Reference Amplitude (SRA) **3**
4.41 Tape Reference Edge **4**
4.42 Typical Field **4**
4.43 Standard Reference Current **4**
4.44 Test Recording Current **4**
4.45 track **4**

© ISO/IEC 2000 – All rights reserved

Copyright International Organization for Standardization
Provided by IHS under license with ISO
No reproduction or networking permitted without license from IHS
Not for Resale

4.46 unprocessed data **4**
4.47 Unprocessed Record **4**

5 Conventions and Notations **4**
5.1 Representation of numbers **4**
5.2 Names **4**

6 Acronyms **4**

7 Environment and safety **4**
7.1 Test environment **4**
7.2 Operating environment **5**
7.3 Storage environment **5**
7.4 Transportation **5**
7.5 Safety **5**
7.6 Flammability **5**

Section 2 - Requirements for the case **6**

8 Dimensional and mechanical characteristics of the case **6**
8.1 General **6**
8.2 Overall dimension (figures 5 and 6) **6**
8.3 Holding areas **7**
8.4 Cartridge insertion **7**
8.5 Window (figure 1) **8**
8.6 Loading grips (figures 5 and 7) **8**
8.7 Label areas (figures 6 and 8) **8**
8.8 Datum areas and Datum holes **8**
8.9 Support areas (figure 9) **9**
8.10 Recognition holes (figures 10, 11 and 12) **10**
8.11 Write-inhibit hole (figure 11) **10**
8.12 Pre-positioning surfaces (figures 4 and 10) **11**
8.13 Cartridge lid (figures 6, 13 and 15) **11**
8.14 Cartridge reel lock (figures 10 and 16) **12**
8.15 Reel access holes (figure 10) **13**
8.16 Interface between the reels and the drive spindles **13**
8.17 Light path (figures 10, 12, 20 and 21) **14**
8.18 Position of the tape in the case (figure 21) **15**
8.19 Tape path zone **15**
8.20 Tape access cavity (figure 10) **16**
8.21 Tape access cavity clearance (figure 24) **16**
8.22 Requirements for the MIC (figures 25 and 26) **16**
8.23 Recognition recesses (figures 8 and 10) **17**

Section 3 - Requirements for the unrecorded tape **38**

9 Mechanical, physical and dimensional characteristics of the tape **38**
9.1 Materials **38**
9.2 Tape length **38**
9.2.1 Length of the magnetic tape **38**
9.2.2 Length of the leader and trailer tapes **38**
9.2.3 Length of the splicing tapes **38**
9.3 Tape width **38**
9.3.1 Width of the magnetic, leader and trailer tapes **38**
9.3.2 Width and position of the splicing tape **38**
9.4 Discontinuities **39**
9.5 Tape thickness **39**
9.5.1 Thickness of the magnetic tape **39**
9.5.2 Thickness of the leader and trailer tapes **39**
9.5.3 Thickness of the splicing tape **39**
9.6 Longitudinal curvature **39**

© ISO/IEC 2000 – All rights reserved
Copyright International Organization for Standardization
Provided by IHS under license with ISO
No reproduction or networking permitted without license from IHS
Not for Resale

9.7 Cupping **39**
9.8 Coating adhesion **39**
9.9 Layer-to-layer adhesion **40**
9.10 Tensile strength **40**
9.10.1 Breaking strength **40**
9.10.2 Yield strength **40**
9.11 Residual elongation **40**
9.12 Electrical resistance of the recording surface **40**
9.13 Tape winding **41**
9.14 Light transmittance of the tape **41**
10 Magnetic recording characteristics **41**
10.1 Typical Field **42**
10.2 Signal Amplitude **42**
10.3 Resolution **42**
10.4 Overwrite **42**
10.5 Ease of erasure **42**
10.6 Tape quality **42**
10.6.1 Missing pulses **42**
10.6.2 Missing pulse zone **43**
10.7 Signal-to-Noise Ratio (SNR) characteristic **43**
Section 4 - Requirements for an interchanged tape **43**
11 Format **43**
11.1 General **43**
11.2 Basic Groups **43**
11.2.1 Entity **44**
11.2.2 Group Information Table **45**
11.2.3 Block Access Table (BAT) **47**
11.3 Sub-Groups **50**
11.3.1 G1 Sub-Group **50**
11.3.2 G2 Sub-Group - Randomizing **51**
11.3.3 G3 Sub-Group **52**
11.4 Data Block **53**
11.4.1 ID information **54**
11.4.2 Recording of the ID Information in the Data Block Headers **56**
12 Method of recording **62**
12.1 Physical recording density **62**
12.2 Long-term average bit cell length **62**
12.3 Short-term average bit cell length **62**
12.4 Rate of change **62**
12.5 Bit shift **63**
12.6 Read signal amplitude **63**
12.7 Maximum recorded levels **63**
13 Track geometry **63**
13.1 Track configuration **63**
13.2 Average track pitch **63**
13.3 Variations of the track pitch **64**
13.4 Track width **64**
13.5 Track angle **64**
13.6 Track edge straightness **64**
13.7 Track length **64**
13.8 Azimuth angles **64**
14 Recorded patterns **64**
14.1 Recorded Data Block **64**

© ISO/IEC 2000 – All rights reserved

Copyright International Organization for Standardization
Provided by IHS under license with ISO
No reproduction or networking permitted without license from IHS
Not for Resale

14.2 Margin blocks **64**

15 Format of a track **64**
15.1 Track structure **64**
15.2 Positioning accuracy **65**
15.3 Tracking scheme **66**

16 Layout of the tape **66**
16.1 Device Area **67**
16.2 Reference Area **67**
16.3 Position Tolerance Band No. 1 ..... **68**
16.4 System Area **68**
16.4.1 System Preamble **68**
16.4.2 System Log **68**
16.4.3 System Postamble **72**
16.4.4 Position Tolerance Band No. 2 ..... **72**
16.4.5 Vendor Group Preamble **72**
16.5 Data Area **72**
16.5.1 Vendor Group **72**
16.5.2 Recorded Data Group **72**
16.5.3 ECC3 ..... **72**
16.5.4 Multiple Recorded Instances **73**
16.5.5 Repeated Frames **73**
16.5.6 Appending and overwriting **74**
16.6 EOD Area **75**
16.7 Optional Device Area **75**
16.8 Logical End Of Tape (LEOT) **76**
16.9 Logical Beginning of Tape (LBOT) **76**
16.10 Early Warning Point - EWP **76**
16.11 Empty Partition **76**
16.12 Initialization **76**

17 Housekeeping Frames **77**
17.1 Amble Frames **77**
17.2 System Amble Frames **77**

18 Content of the MIC **77**

Annexes

A - Measurement of light transmittance **79**

B - Measurement of Signal-to-Noise Ratio **82**

C - Method for determining the nominal and the maximum allowable recorded levels **83**

D - Representation of 8-bit bytes by 10-bit patterns **84**

E - Measurement of bit shift **96**

F - Method of measuring the straightness of track edges **98**

G - ECC calculation **99**

H - Recommendations for transportation **102**

J - Read-After-Write **103**

K - Example of the content of a Basic Group No. 0 ..... **104**

L - Examples of MIC chip **105**

--`,,```,,,,````-`-`,,`,,`,`,,`---

© ISO/IEC 2000 – All rights reserved
Copyright International Organization for Standardization
Provided by IHS under license with ISO
No reproduction or networking permitted without license from IHS
Not for Resale

Foreword

ISO (the International Organization for Standardization) and IEC (the International Electrotechnical Commission) form the specialized system for worldwide standardization. National bodies that are members of ISO or IEC participate in the development of International Standards through technical committees established by the respective organization to deal with particular fields of technical activity. ISO and IEC technical committees collaborate in fields of mutual interest. Other international organizations, governmental and non-governmental, in liaison with ISO and IEC, also take part in the work.

International Standards are drafted in accordance with the rules given in the ISO/IEC Directives, Part 3.

In the field of information technology, ISO and IEC have established a joint technical committee, ISO/IEC JTC 1. Draft International Standards adopted by the joint technical committee are circulated to national bodies for voting. Publication as an International Standard requires approval by at least 75 % of the national bodies casting a vote.

Attention is drawn to the possibility that some of the elements of this International Standard may be the subject of patent rights. ISO and IEC shall not be held responsible for identifying any or all such patent rights.

This International Standard was prepared by ECMA (as ECMA-291) and was adopted, under a special “fast-track procedure”, by Joint Technical Committee ISO/IEC JTC 1, *Information technology*, in parallel with its approval of national bodies of ISO and IEC.

Annexes A to G form a normative part of this International Standard, annexes H to L are for information only.

© ISO/IEC 2000 – All rights reserved

Copyright International Organization for Standardization
Provided by IHS under license with ISO
No reproduction or networking permitted without license from IHS
Not for Resale

Introduction

This International Standard constitutes a further development of the magnetic tape cartridge specified in International Standard ISO/IEC 14833. A higher capacity is achieved by using a thinner, thus longer tape.

© ISO/IEC 2000 – All rights reserved
Copyright International Organization for Standardization
Provided by IHS under license with ISO
No reproduction or networking permitted without license from IHS
Not for Resale

Information technology — 8 mm wide magnetic tape cartridge for information interchange — Helical scan recording AIT-1 with MIC format

Section 1 - General

1 Scope

This International Standard specifies the physical and magnetic characteristics of an 8 mm wide magnetic tape cartridge containing a memory chip to enable physical interchange of such cartridges between drives. It also specifies the quality of the recorded signals, the recording method and the recorded format - called Advanced Intelligent Tape No. 1 with Memory In Cartridge (AIT-1 with MIC) - thereby allowing data interchange between drives by means of such magnetic tape cartridges. The System Log is recorded in the MIC.

This International Standard specifies two types of cartridge depending on the thickness of the magnetic tape contained in the case.

Information interchange between systems also requires, at a minimum, agreement between the interchange parties upon the interchange code(s) and the specifications of the structure and labelling of the information on the interchanged cartridge.

2 Conformance

2.1 Magnetic tape cartridge

A tape cartridge shall be in conformance with this International Standard if it meets all the mandatory requirements specified herein. The tape requirements shall be satisfied throughout the extent of the tape.

2.2 Generating drive

A drive generating a magnetic tape cartridge for interchange shall be in conformance with this International Standard if all recordings on the tape meet the mandatory requirements of this International Standard, and if either or both methods of appending and overwriting are implemented. In addition, such a drive shall be able to record the System Log in the MIC.

A claim of conformance shall state which of the following optional features are implemented and which are not

— the performing of a Read-After-Write check and the recording of any necessary repeated frames;

— the generation of ECC3 Frames.

In addition a claim of conformance shall state

— whether or not one, or more, registered algorithm(s) are implemented within the system and are able to compress data received from the host prior to collecting the data into Basic Groups, and

— the registered identification number(s) of the implemented compression algorithm(s).

2.3 Receiving drive

A drive receiving a magnetic tape cartridge for interchange shall be in conformance with this International Standard if it is able to handle any recording made on the tape according to this International Standard. In particular it shall

— be able to read the System Log recorded in the MIC,

— be able to recognise repeated frames, and to make available to the host, data and Separator Marks from only one of these frames;

— be able to recognise multiple representations of the same Basic Group, and to make available to the host, data and Separator Marks from only one of these representations;

— be able to recognise an ECC3 frame, and ignore it if the system is not capable of using ECC3 check bytes in a process of error correction;

— be able to recognise processed data within an Entity, identify the algorithm used, and make its registered identification number available to the host;

— be able to make processed data available to the host.

— In addition a claim of conformance shall state

© ISO/IEC 2000 – All rights reserved

Copyright International Organization for Standardization
Provided by IHS under license with ISO
No reproduction or networking permitted without license from IHS
Not for Resale

— whether or not the system is capable of using ECC3 check bytes in a process of error correction;

— whether or not one or more de-compression algorithm(s) are implemented within the system, and are able to be applied to compressed data prior to making such data available to the host;

— the registered identification number(s) of the compression algorithm(s) for which a complementary de-compression algorithm is implemented.

3 Normative references

The following normative documents contain provisions which, through reference in this text, constitute provisions of this International Standard. For dated references, subsequent amendments to, or revisions of, any of these publications do not apply. However, parties to agreements based on this International Standard are encouraged to investigate the possibility of applying the most recent editions of the normative documents indicated below. For undated references, the latest edition of the normative document referred to applies. Members of ISO and IEC maintain registers of currently valid International Standards.

ISO 527-3:1995	*Plastics – Determination of tensile properties – Part 3: Test conditions for films and sheets.*
ISO 1302:1992	*Technical drawings – Method of indicating surface texture on drawings.*
ISO/IEC 11576:1994	*Information technology – Procedure for the registration of algorithms for the lossless compression of data.*
IEC 60950:1999	*Safety of information technology equipment.*

4 Terms and definitions

For the purposes of this International Standard, the following terms and definitions apply.

4.1 Absolute Frame Number (AFN): A sequence number encoded in a Frame.

4.2 a.c. erase: A process of erasure utilizing magnetic fields of decaying intensity.

4.3 Access: A read or write pass over a partition.

4.4 algorithm: A set of rules for transforming the logical representation of data.

4.5 Area ID: An identifier defining the area of the tape and specifying the types of Frame written.

4.6 Automatic Track Finding (ATF): The method by which tracking is achieved.

4.7 Average Signal Amplitude: The average peak-to-peak value of the output signal from the read head at the fundamental frequency of the specified physical recording density over a minimum of 20,0 mm of track, exclusive of missing pulses.

4.8 azimuth: The angular deviation made by the mean flux transition line with a line normal to the centreline of the recorded track.

4.9 back surface: The surface of the tape opposite to the magnetic coating which is used to record data.

4.10 byte: An ordered set of bits acted upon as a unit.

4.11 cartridge: A case containing magnetic tape stored on twin hubs.

4.12 Channel bit: A bit after 8-10 transformation.

4.13 Codeword: A word generated by a compression algorithm. The number of bits in a Codeword is variable, and is not specified by this International Standard.

4.14 Early Warning Point (EWP): A point along the length of the tape at which warning is given of the approach, in the forward direction of the tape motion, of the Partition Boundary or of the Physical End of Tape.

4.15 End of Data (EOD): The point on the tape at the end of the group which contains the last user data.

4.16 Entity: A unit of recorded data, comprising an Entity Header and a Record sequence.

4.17 Error Correcting Code (ECC): A mathematical computation yielding check bytes used for the detection and correction of errors.

4.18 flux transition position: That point which exhibits maximum free-space flux density normal to the tape surface.

4.19 flux transition spacing: The distance along a track between successive flux transitions.

© ISO/IEC 2000 – All rights reserved
Copyright International Organization for Standardization
Provided by IHS under license with ISO
No reproduction or networking permitted without license from IHS
Not for Resale

4.20 Frame: A pair of adjacent tracks with azimuths of opposite polarity, in which the track with the positive azimuth precedes that with the negative azimuth.

4.21 Housekeeping Frame: A Frame which contains no user data and which is identified as such by the setting of the Data Fields therein.

4.22 Logical Beginning of Tape (LBOT): The point along the length of the tape where a recording of data for interchange commences.

4.23 magnetic tape: A tape which will accept and retain the magnetic signals intended for input, output and storage purposes on computers and associated equipment.

4.24 Master Standard Amplitude Calibration Tape: A pre-recorded tape on which the standard signal amplitudes have been recorded in the tracks of positive and negative azimuth recorded at a track pitch of 11,0 μm, on an a.c. erased tape.

NOTE 1 - The tape includes recording at 1 428,6 ftpmm, 1 904,8 ftpmm, 2 857,1 ftpmm and 3 809,5 ftpmm.

NOTE 2 - The Master Standard Amplitude Calibration Tape has been established by Sony Corporation.

4.25 Master Standard Reference Tape: A tape selected as the standard for the Reference Recording Field, Signal Amplitude, Resolution, Overwrite and Signal-to-Noise ratio.

NOTE - The Master Standard Reference Tape has been established by Sony Corporation.

4.26 Memory In Cartridge (MIC): A chip within the case containing information about the cartridge and its recordings.

4.27 Partition Boundary: The point along the length of a magnetic tape at which a Partition ends and the next Partition commences.

4.28 Physical Beginning of Tape (PBOT): The point where the leader tape is joined to the magnetic tape.

4.29 Physical End of Tape (PEOT): The point where the trailer tape is joined to the magnetic tape.

4.30 physical recording density: The number of recorded flux transitions per unit length of track, expressed in flux transitions per millimetre (ftpmm).

4.31 pre-recording condition: The recording levels above which a tape intended for interchange shall not previously have been recorded.

4.32 processing: The use of an algorithm to transform host data into Codewords.

4.33 processed data: A sequence of Codewords which results from the application of processing to data.

4.34 Processed Record: A sequence of Codewords which results from the application of processing to an Unprocessed Record.

4.35 record: Related data treated as a unit of information.

4.36 Reference Field: The Typical Field of the Master Standard Reference Tape.

4.37 Secondary Standard Amplitude Calibration Tape: A tape pre-recorded as specified for the Master Standard Amplitude Calibration Tape the outputs of which are related to those of the Master Standard Amplitude Calibration Tape by calibration factors.

NOTE - Secondary Standard Amplitude Calibration Tapes can be ordered under Part No. SSCT-AIT-1 from Sony Corporation, RME Company, Data Media Marketing Div. 6-7-35 Kitashinagawa, Shinagawa-ku, Tokyo 141, Japan. In principle such Secondary Standard Amplitude Calibration Tapes will be available for a period of 10 years from the publication of the first Edition of this International Standard. However, by agreement between ISO/IEC and Sony Corporation, this period can be shortened or extended to take into account the demand for such Secondary Standard Amplitude Calibration Tapes.

4.38 Secondary Standard Reference Tape: A tape the outputs of which are related to those of the Master Standard Reference Tape by calibration factors.

NOTE - Secondary Standard Reference Tapes can be ordered under Part No. SSRT-AIT-1 from Sony Corporation, RME Company, Data Media Marketing Div., 6-7-35 Kitashinagawa, Shinagawa-ku, Tokyo 141, Japan. In principle such Secondary Standard Reference Tapes will be available for a period of 10 years from the publication of the first Edition of this International Standard. However, by agreement between ISO/IEC and Sony Corporation, this period can be shortened or extended to take into account the demand for such Secondary Standard Reference Tapes.

It is intended that these be used for calibrating tertiary reference tapes for use in routine calibration.

4.39 Separator Mark: A record containing no user data, which is used to separate data.

4.40 Standard Reference Amplitude (SRA): The Average Signal Amplitude from the tracks of positive azimuth of the Master Standard Amplitude Calibration Tape at a specified physical recording density.

© ISO/IEC 2000 – All rights reserved

Copyright International Organization for Standardization
Provided by IHS under license with ISO
No reproduction or networking permitted without license from IHS
Not for Resale

4.41 Tape Reference Edge: The bottom edge of the tape when viewing the recording side of the tape, with the PEOT to the observer's right.

4.42 Typical Field: In the plot of Average Signal Amplitude against the recording field at the physical recording density of 2 857,1 ftpmm, the field that causes an Average Signal Amplitude equal to 90% of the maximum Average Signal Amplitude.

4.43 Standard Reference Current: The current that produces the Reference Field.

4.44 Test Recording Current: The current used to record an SRA. It is 1,5 times the Standard Reference Current.

4.45 track: A diagonally positioned area on the tape along which a series of magnetic signals may be recorded.

4.46 unprocessed data: Data which has not been subjected to processing.

4.47 Unprocessed Record: A record of unprocessed data, comprising an integral number of bytes.

5 Conventions and Notations

5.1 Representation of numbers

A measured value is rounded off to the least significant digit of the corresponding specified value. This implies that, for example, a specified value of 1,26 with a positive tolerance of +0,01 and a negative tolerance of -0,02 allows a range of measured values from 1,235 to 1,275.

The setting of a bit is denoted by ZERO or ONE.

Bit patterns and numbers in binary notation are represented by strings of digits 0 and 1. Within such strings, X may be used to indicate that the setting of a bit is not specified within the string.

Bit patterns and numbers in binary notation are shown with the most significant bit to the left and the least significant bit to the right.

The most significant bit of an 8-bit byte is denoted by b8 and the least significant by b1.

5.2 Names

The names of basic elements, e.g. specific fields, are given with a capital initial letter.

6 Acronyms

AEWP After Early Warning Point
AFN Absolute Frame Number
ATF Automatic Tracking Finding
BAT Block Access Table
ECC Error Correcting Code
EOD End of Data
EWP Early Warning Point
GIT Group Information Table
LBOT Logical Beginning of Tape
LEOT Logical End of Tape
LSB Least Significant Byte
LF-ID Logical Frame Identifier
MIC Memory in Cartridge
MSB Most Significant Byte
MSRT Master Standard Reference Tape
PBOT Physical Beginning of Tape
PEOT Physical End of Tape
RAW Read-After-Write
SNR Signal-to-Noise Ratio
msb Most significant bit

7 Environment and safety

7.1 Test environment

Tests and measurements made on the tape cartridge to check the requirements of this International Standard shall be carried out in the following ambient conditions of the air immediately surrounding the drive.

--`,,```,,,,````-`-`,,`,,`,`,,`---
Copyright International Organization for Standardization
Provided by IHS under license with ISO
No reproduction or networking permitted without license from IHS
Not for Resale
© ISO/IEC 2000 – All rights reserved

temperature : 23 °C ± 2 °C
relative humidity : 40 % to 60 %
conditioning period before testing : 24 h min.

7.2 Operating environment

Cartridges used for data interchange shall be capable of operating under the following conditions, as measured within 10 mm of the tape exit from the drum of the generating or receiving drive:

temperature : 5 °C to 45 °C
relative humidity : 20 % to 80 %
wet bulb temperature : 26 °C max.

There shall be no deposit of moisture on or in the cartridge.

The above conditions include any temperature rise that may occur while operating the drive.

Conditioning before operating:

If a cartridge has been exposed during storage and/or transportation to a condition outside the above values, before use the cartridge shall be conditioned in the operating environment for a time at least equal to the period during which it has been out of the operating environment, up to a maximum of 24 h.

NOTE - Rapid variations of temperature should be avoided.

7.3 Storage environment

The following conditions shall be observed during storage

temperature : 5°C to 32°C
relative humidity : 20 % to 60 %

The stray magnetic field at any point on the tape shall not exceed 4000 A/m. There shall be no deposit of moisture on or in the cartridge.

7.4 Transportation

Recommended limits for the environment to which a cartridge may be subjected during transportation, and the precautions to be taken to minimize the possibility of damage, are provided in annex H.

7.5 Safety

The cartridge and its components shall satisfy the requirements of Standard IEC 60950. The cartridge and its components shall not constitute any safety or health hazard when used in the intended manner, or through any foreseeable misuse in an information processing system.

7.6 Flammability

The cartridge and its components shall be made from materials, which if ignited from a match flame, do not continue to burn in a still carbon dioxide atmosphere.

© ISO/IEC 2000 – All rights reserved

Copyright International Organization for Standardization
Provided by IHS under license with ISO
No reproduction or networking permitted without license from IHS
Not for Resale

Section 2 - Requirements for the case

8 Dimensional and mechanical characteristics of the case

8.1 General

Dimensional characteristics are specified for those parameters deemed to be mandatory for interchange and compatible use of the cartridge. Where there is freedom of design, only the functional characteristics of the elements described are indicated. In the figures a typical implementation is represented in third angle projection.

Figure 1 is a perspective view of the cartridge seen from the top.
Figure 2 is a perspective view of the cartridge seen from the bottom.
Figure 3 is a perspective view of Reference Planes X, Y and Z.
Figure 4 shows the front side with the lid closed.
Figure 5 shows the left side with the lid closed.
Figure 6 shows the top side with the lid closed.
Figure 7 shows the right side with the lid closed.
Figure 8 shows the rear side with the lid closed.
Figure 9 shows the bottom side, Datum and Support areas.
Figure 10 shows the bottom side with the lid removed.
Figure 11 shows an enlarged view of the Datum and Recognition holes.
Figure 12 shows the cross-sections through the light path holes, the Recognition holes and the Write-inhibit hole.
Figure 13 shows details of the lid when closed, rotating and open.
Figure 14 shows the details of the lid release insertion channel.
Figure 15 shows the lid lock release requirements.
Figure 16 shows the reel lock release requirements.
Figure 17 shows the reel unlock force direction.
Figure 18 shows the lid release force direction.
Figure 19 shows the lid opening force direction.
Figure 20 shows the light path and light window.
Figure 21 shows the internal tape path and light path.
Figure 22 shows the cartridge reel and a cross-section of the cartridge reel.
Figure 23 shows a cross-section of the interface of the cartridge reel with the drive spindle.
Figure 24 shows the tape access cavity clearance.
Figure 25 shows the Access Holes of the MIC on the rear side.
Figure 26 shows the Access Holes of the MIC on the bottom side.

The dimensions are referred to three orthogonal Reference Planes X, Y and Z (see figure 3).

Plane X is perpendicular to Plane Z and passes through the centres of the Datum holes A and B.

Plane Y is perpendicular to Plane X and Plane Z and passes through the centre of Datum hole A.

Datum areas A, B and C lie in Plane Z.

8.2 Overall dimension (figures 5 and 6)

The length of the case shall be

$l_1 = 62{,}5 \text{ mm} \pm 0{,}3 \text{ mm}$

The width of the case shall be

$l_2 = 95{,}0 \text{ mm} \pm 0{,}2 \text{ mm}$

The distance from the top side of the case to Reference Plane Z shall be

$l_3 = 15{,}0 \text{ mm} \pm 0{,}2 \text{ mm}$

The distance from the rear side to Plane X shall be

$l_4 = 47{,}35 \text{ mm} \pm 0{,}15 \text{ mm}$

The distance from the right side to Plane Y shall be

$l_5 = 13{,}0 \text{ mm} \pm 0{,}1 \text{ mm}$

© ISO/IEC 2000 – All rights reserved
Copyright International Organization for Standardization
Provided by IHS under license with ISO
No reproduction or networking permitted without license from IHS
Not for Resale

8.3 Holding areas

The holding areas shown shaded in figure 6 shall be the areas along which the cartridge shall be held down when inserted into the drive. The distance of the holding areas from Plane X shall be

l_6 = 12,0 mm max.

The width when measured from the edges of the case shall be

l_7 = 3,0 mm min.

8.4 Cartridge insertion

The cartridge shall have asymmetrical features to prevent insertion into the drive in other than the correct orientation. These consist of a channel, a recess and an incline.

The channel (figures 4 and 14) shall provide for an unobstructed path, when the lid is closed and locked, to unlock the lid. The distance of the channel from Plane Y shall be

l_8 = 79,6 mm ± 0,2 mm

There shall be a chamfer at the beginning of the channel defined by

l_9 = 1,0 mm ± 0,1 mm
l_{16} = 1,5 mm ± 0,1 mm

An additional chamfer further into the channel shall be defined by

l_{10} = 0,7 mm ± 0,1 mm
l_{17} = 1,9 mm ± 0,1 mm
l_{18} = 3,65 mm ± 0,10 mm

The innermost width of the channel shall be

l_{11} = 1,0 mm min.

There shall be a chamfer on the lid defined by

l_{12} = 1,2 mm ± 0,1 mm
l_{13} = 0,8 mm ± 0,1 mm
l_{14} = 1,2 mm ± 0,1 mm
l_{15} = 0,5 mm ± 0,1 mm

The distance from the left side of the case to the release pin shall be

l_{19} = 0,2 mm ± 0,2 mm

The height of the insertion area shall be

l_{20} = 2,3 mm min.

$l_{21} = 2{,}5\ \text{mm}\ {}^{+\ 0{,}2\ \text{mm}}_{-\ 0{,}0\ \text{mm}}$

The recess is located on the right side of the cartridge. The position and dimensions (figures 7 and 10) shall be defined by

l_{22} = 7,5 mm max.
l_{23} = 11,0 mm ± 0,2 mm
l_{24} = 1,5 mm ± 0,1 mm

The depth of the recess shall be

l_{25} = 1,5 mm ± 0,1 mm

© ISO/IEC 2000 – All rights reserved

Copyright International Organization for Standardization
Provided by IHS under license with ISO
No reproduction or networking permitted without license from IHS
Not for Resale

The incline (figure 13) is part of the lid structure. The distance of the incline from Plane X shall be

$$l_{26} = 7{,}7 \text{ mm} \begin{matrix} + 0{,}0 \text{ mm} \\ - 2{,}5 \text{ mm} \end{matrix}$$

The angle of the incline shall be

$$a_1 = 17{,}5° \pm 4{,}0°$$

The incline shall end at its intersection with radius r_3 (see 8.13).

8.5 Window (figure 1)

A window may be provided on the top side so that parts of the reels are visible. The window, if provided, shall not extend beyond the height of the cartridge.

8.6 Loading grips (figures 5 and 7)

The cartridge shall have a recessed loading grip on the right and on the left side to allow handling by an automatic loading mechanism.

The distance from Plane X to the centreline of the loading grip shall be

$$l_{28} = 39{,}35 \text{ mm} \pm 0{,}20 \text{ mm}$$

The distance of the side edges of the loading grips from Plane Z and from the top side, respectively, shall be

$$l_{29} = 1{,}5 \text{ mm} \pm 0{,}1 \text{ mm}$$

The width of the indent shall be

$$l_{30} = 5{,}0 \text{ mm} \pm 0{,}3 \text{ mm}$$

The depth of the indent shall be

$$l_{31} = 2{,}0 \text{ mm} \pm 0{,}2 \text{ mm}$$

The angle of the indent shall be

$$a_2 = 90° \pm 5°$$

8.7 Label areas (figures 6 and 8)

A portion of the rear side of the cartridge and a portion of the top side of the cartridge may be used for labels. The portion and the size of the labels shall not interfere with the operation or clearance requirements of the cartridge component parts.

The area used for labels on the top side shall not extend beyond the inner edge of the holding areas defined by l_6 and l_7.

The position and dimensions of the label area on the rear side shall be defined by

$l_{32} = 0{,}5$ mm min.
$l_{33} = 1{,}5$ mm min.
$l_{34} = 65{,}0$ mm max.
$l_{171} \geq l_{164}$

The label areas shall not be recessed by more than 0,3 mm.

8.8 Datum areas and Datum holes

The annular Datum areas A, B and C shall lie in Plane Z (see figures 9, 10 and 11). They determine the vertical position of the cartridge in the drive. Each shall have a diameter $d_1 = 6{,}0$ mm ± 0,1 mm and be concentric with the respective Datum hole.

The centres of Datum holes A and B shall lie in Plane X.

The centre of the circular Datum hole A shall be at the intersection of Planes X and Y (see figure 10).

The distance from the centre of Datum hole B to Plane Y (see figure 9) shall be

$$l_{35} = 68{,}0 \text{ mm} \pm 0{,}1 \text{ mm}$$

© ISO/IEC 2000 – All rights reserved
Copyright International Organization for Standardization
Provided by IHS under license with ISO
No reproduction or networking permitted without license from IHS
Not for Resale

The distance from the centre of the circular Datum hole C to Plane Y (see figure 11) shall be

l_{36} = 10,20 mm ± 0,05 mm

The distance from the centre of Datum hole D to that of Datum hole C (see figure 9) shall be

l_{37} = 89,4 mm ± 0,1 mm

The distance from the centres of Datum holes C and D to Plane X (see figure 10) shall be

l_{38} = 36,35 mm ± 0,08 mm

The thickness of the case wall in the Datum areas shall be

l_{39} = 1,2 mm ± 0,1 mm

The diameter at the bottom of Datum hole A and Datum hole C shall be

l_{40} = 2,6 mm min.

The depth of the holes shall be

l_{42} = 4,0 mm min.

The upper diameter of Datum holes A and C shall be

$$l_{44} = 3{,}00\ \text{mm}\ {}^{+\ 0{,}05\ \text{mm}}_{-\ 0{,}00\ \text{mm}}$$

This diameter shall be maintained to a depth of

l_{41} = 1,5 mm min.

The holes shall be tapered from this depth to the bottom of diameter l_{40}.

There shall be a chamfer around the outside of Datum hole A and Datum hole C defined by

l_{43} = 0,3 mm max.

a_3 = 45° ± 1°

The width at the bottom of Datum holes B and D shall be l_{40}.

The depth of these holes shall be l_{42}.

The dimensions at the top of these holes shall be

l_{45} = 3,5 mm ± 0,1 mm

$$l_{46} = 3{,}00\ \text{mm}\ {}^{+\ 0{,}05\ \text{mm}}_{-\ 0{,}00\ \text{mm}}$$

r_1 = 1,7 mm min.

This width shall be maintained to a depth l_{41}.

There shall be a chamfer around the outside of Datum holes B and D defined by l_{43} and a_3.

8.9 Support areas (figure 9)

The cartridge Support areas are shown shaded in figure 9. Support areas A, B and C shall be coplanar with Datum areas A, B and C, respectively, within 0,1 mm. Support area D shall be coplanar with Datum Plane Z within 0,15 mm.

The areas within l_{49} of the edge of the cartridge shall be recessed from the Support areas.

l_{49} = 0,5 mm ± 0,1 mm

The position and dimensions of Support areas A and B shall be defined by

© ISO/IEC 2000 – All rights reserved

Copyright International Organization for Standardization
Provided by IHS under license with ISO
No reproduction or networking permitted without license from IHS
Not for Resale

l_{47} = 10,0 mm ± 0,1 mm (twice)
l_{48} = 11,0 mm ± 0,1 mm
l_{50} = 7,0 mm ± 0,1 mm

The distance of Support areas C and D from Plane X shall be

l_{51} = 30,0 mm ± 0,1 mm

The dimensions of Support areas C and D shall be defined by l_{47} and

l_{52} = 5,5 mm ± 0,1 mm
l_{53} = 64,5 mm ± 0,2 mm

8.10 Recognition holes (figures 10, 11 and 12)

There shall be three Recognition holes numbered 1 to 3 as shown in figure 11.

The position of the centre of Recognition hole 1 shall be defined by

l_{54} = 43,35 mm ± 0,15 mm
l_{55} = 3,7 mm ± 0,1 mm
l_{56} = 2,3 mm ± 0,1 mm

The position of the centre of Recognition hole 2 shall be defined by l_{54} and

l_{61} = 10,0 mm ± 0,1 mm

Recognition holes 1 and 2 shall be circular, their diameter shall be 3,0 mm ± 0,1 mm. Recognition hole 3 shall have a square form. Its position and dimensions shall be defined by

l_{58} = 74,3 mm ± 0,1 mm
l_{142} = 77,3 mm ± 0,1 mm
l_{143} = 41,15 mm ± 0,10 mm
l_{144} = 44,45 mm ± 0,10 mm

The depth of a closed Recognition hole below Plane Z (section E-E in figure 12) shall be

$$l_{59} = 1{,}2 \text{ mm} \begin{matrix} + 0{,}3 \text{ mm} \\ - 0{,}1 \text{ mm} \end{matrix}$$

The depth below Plane Z of an open Recognition hole shall be

l_{60} = 5,0 mm min.

Section E-E shows a Recognition hole closed by a plug. This plug shall withstand an applied force of 0,5 N without being punched out.

This International Standard prescribes the following states of these holes.

— Recognition hole 1 shall be closed
— Recognition hole 2 shall be open
— Recognition hole 3 shall be open

8.11 Write-inhibit hole (figure 11)

The centre of the Write-inhibit hole shall be defined by l_{54} and

l_{57} = 6,4 mm ± 0,1 mm

The diameter of the hole shall be 3,0 mm ± 0,1 mm.

The depth of a closed Write-inhibit hole below Plane Z shall be l_{59}.

The free space below an open Write-inhibit hole shall be l_{60} below Plane Z.

© ISO/IEC 2000 – All rights reserved
Copyright International Organization for Standardization
Provided by IHS under license with ISO
No reproduction or networking permitted without license from IHS
Not for Resale

When the Write-inhibit hole is open, recording on the tape is inhibited. When it is closed, recording is enabled.

The case may have a movable element allowing the Write-inhibit hole to be opened or closed. If present, this element shall be such that the state of the Write-inhibit hole shall be visible (see figure 8 as an example). The Write-inhibit hole closure shall be constructed so as to withstand a force of 0,5 N. The force required to open or close the Write-inhibit hole shall be between 1 N and 15 N.

8.12 Pre-positioning surfaces (figures 4 and 10)

These surfaces determine the position of the cartridge when it is inserted into the loading slot of the drive.

The distance of the surface on which the Tape Reference Edge rests from Plane Z (figure 4) shall be

$$l_{62} = 2{,}4 \text{ mm} \begin{matrix} + 0{,}0 \text{ mm} \\ - 0{,}1 \text{ mm} \end{matrix}$$

The position of the cartridge relative to Plane Y shall be controlled by the pre-positioning surfaces defined by

$l_{63} = 1{,}0 \text{ mm} \pm 0{,}1 \text{ mm}$
$l_{64} = 69{,}0 \text{ mm} \pm 0{,}2 \text{ mm}$

The position of the cartridge relative to Plane X shall be controlled by the pre-positioning surfaces defined by

$l_{65} = 14{,}65 \text{ mm} \pm 0{,}10 \text{ mm}$

The angle of the chamfer at the edge of this surface shall be defined by

$a_4 = 45° \pm 1°$

8.13 Cartridge lid (figures 6, 13 and 15)

The cartridge shall have a lid for protection of the tape during handling, storage and transportation. The lid consists of two parts, the main part and an auxiliary part.

The main part rotates around an axis A (see figure 13) the position of which is fixed relative to the case. Its location shall be defined by

$l_{27} = 0{,}55 \text{ mm} \pm 0{,}10 \text{ mm}$
$l_{67} = 7{,}5 \text{ mm} \pm 0{,}1 \text{ mm}$

The auxiliary part rotates around axis B the position of which is fixed relative to the main part of the lid and moves with it. When the lid is in the closed position, the location of axis B shall be defined by

$l_{68} = 7{,}0 \text{ mm} \pm 0{,}1 \text{ mm}$
$l_{69} = 10{,}1 \text{ mm} \pm 0{,}1 \text{ mm}$

The rotation of the auxiliary part is controlled by a cam at each end so that it follows the path indicated in figure 13.

In the open position, the front edge of the auxiliary part shall be at a height

$l_{70} = 14{,}8 \text{ mm min.}$

above Plane Z.

The case shall allow for proper clearance of the lid and auxiliary part defined by

$$l_{71} = 11{,}5 \text{ mm} \begin{matrix} + 0{,}2 \text{ mm} \\ - 0{,}0 \text{ mm} \end{matrix}$$

$l_{72} = 1{,}2 \text{ mm} \pm 0{,}1 \text{ mm}$

When the lid is completely open, neither part shall extend beyond a plane parallel to Plane Z located above it at a height

$l_{73} = 22{,}3 \text{ mm max.}$

© ISO/IEC 2000 – All rights reserved

Copyright International Organization for Standardization
Provided by IHS under license with ISO
No reproduction or networking permitted without license from IHS
Not for Resale

When the lid is in its completely open position, its front edge shall have been rotated by an angle defined by

$$a_5 = 85° \begin{matrix} + 1° \\ - 2° \end{matrix}$$

When the lid is in partially open position, neither part shall extend beyond a plane parallel to Plane Z located above it at a height

l_{74} = 22,5 mm max.

The path of the top of the lid as it opens shall be defined by

r_2 = 14,9 mm max.

The start point of the incline on the case that meets the lid (figure 6) shall be defined by

l_{75} = 8,4 mm max.

In the closed position of the lid, its height over Plane Z (figure 13) shall be

$$l_{76} = 15{,}2 \text{ mm} \begin{matrix} + 0{,}0 \text{ mm} \\ - 0{,}5 \text{ mm} \end{matrix}$$

and its distance from Plane X shall be

$$l_{77} = 15{,}3 \text{ mm} \begin{matrix} + 0{,}0 \text{ mm} \\ - 0{,}3 \text{ mm} \end{matrix}$$

In the closed position of the lid, its inside shall provide a clearance for the tape defined by

l_{78} = 13,15 mm ± 0,10 mm

The top front of the lid shall be convex. The centre of the corresponding radius shall be on axis A. This radius shall be

r_3 = 14,7 mm max.

The design of the locking mechanism is not specified by this International Standard except that it shall be operated by a release pin located in the drive. In the closed and locked position of the lid, access to the lid lock release shall be unobstructed in the shaded area (see figure 15) defined by

l_{79} = 2,0 mm ± 0,1 mm
l_{145} = 6,3 mm ± 0,2 mm
l_{146} = 1,2 mm ± 0,1 mm
a_{15} = 45° ± 1°
a_{16} = 15° ± 1°

The release mechanism of the lid shall be actuated when the drive release pin is in the other shaded area of figure 15 defined by l_{79} and

l_{80} = 8,2 mm ± 0,2 mm
l_{81} = 0,7 mm ± 0,2 mm
a_6 = 15° ± 1°

The force required to unlock the lid lock shall not exceed 0,25 N in the direction shown in figure 18.

The force required to open the lid shall not exceed 1,0 N in the direction shown in figure 19.

8.14 Cartridge reel lock (figures 10 and 16)

The reels shall be locked when the cartridge is removed from the tape drive. The design of the locking mechanism is not specified by this International Standard except that it shall meet the requirements specified below so as being able to be operated by a release pin of the drive.

The release mechanism shall be accessed through a rectangular hole of the case (figure 10) which shall be defined as follows.

— its centreline shall be parallel to Plane Y at a distance

l_{82} = 34,5 mm ± 0,1 mm

© ISO/IEC 2000 – All rights reserved
Copyright International Organization for Standardization
Provided by IHS under license with ISO
No reproduction or networking permitted without license from IHS
Not for Resale

— its top edge shall be parallel to Plane X at a distance

l_{83} = 35,85 mm ± 0,15 mm

— its width shall be

l_{84} = 4,0 mm ± 0,1 mm

— its height shall be

l_{85} = 6,5 mm min.

The dimension of the release mechanism shall be defined by

$l_{86} = 3{,}2\ \text{mm}\ ^{+\ 0{,}3\ \text{mm}}_{-\ 0{,}2\ \text{mm}}$

l_{87} = 4,0 mm ± 0,1 mm

a_7 = 60,0° ± 1,0°

The reels shall be locked when the operating face of the release pin is located at a distance from Plane X defined by

$l_{88} = 39{,}0\ \text{mm}\ ^{+\ 2{,}0\ \text{mm}}_{-\ 0{,}0\ \text{mm}}$

The reels shall be unlocked when the operating face of the release pin is located at a distance from Plane X defined by

$l_{89} = 41{,}75\ \text{mm}\ ^{+\ 0{,}50\ \text{mm}}_{-\ 0{,}00\ \text{mm}}$

In this position there shall be a clearance between the locking mechanism and the inside of the rear wall of the cartridge defined by

l_{90} = 0,5 mm min.

The pin used to move the locking mechanism shall penetrate into the cartridge over a distance of

l_{91} = 7,8 mm max.

and the bottom edge of the slanted part of the pin shall penetrate over a distance of l_{86} min.

The rectangular cavity of the locking mechanism shall be defined by

l_{92} = 4,0 mm ± 0,1 mm
r_4 = 0,3 mm max.

The force required to unlock the reel lock in the direction shown in figure 17 shall not exceed 1,0 N.

8.15 Reel access holes (figure 10)

The case shall have two circular reel access holes which shall allow penetration of the drive spindles.

The positions of the access holes shall be defined by

l_{93} = 23,00 mm ± 0,05 mm
l_{94} = 11,40 mm ± 0,05 mm
l_{95} = 46,2 mm ± 0,1 mm

The diameter of the holes shall be

d_2 = 18,80 mm ± 0,05 mm

8.16 Interface between the reels and the drive spindles

The drive spindles (see figures 22 and 23) shall engage the reels in the area defined by

l_{102} = 5,4 mm ± 0,1 mm
l_{103} = 4,4 mm ± 0,1 mm

© ISO/IEC 2000 – All rights reserved

Copyright International Organization for Standardization
Provided by IHS under license with ISO
No reproduction or networking permitted without license from IHS
Not for Resale

l_{104} = 0,6 mm max.

$d_4 = 10{,}00\ \text{mm}\ ^{+\ 0{,}08\ \text{mm}}_{-\ 0{,}00\ \text{mm}}$

d_5 = 16,0 mm max.

$d_6 = 18{,}0\ \text{mm}\ ^{+\ 0{,}0\ \text{mm}}_{-\ 0{,}1\ \text{mm}}$

$d_7 = 16{,}0\ \text{mm}\ ^{+\ 0{,}0\ \text{mm}}_{-\ 0{,}1\ \text{mm}}$

The reel engagement hole shall have a chamfer defined by

l_{105} = 2,4 mm ± 0,1 mm
a_9 = 15° ± 1°

The bottom of the reel on the outside edge shall have a chamfer defined by

l_{106} = 0,2 mm max.
a_8 = 45° ± 1°

The position and width of the slots with which the drive spindle will engage shall be defined by

$l_{107} = 2{,}4\ \text{mm}\ ^{+\ 0{,}2\ \text{mm}}_{-\ 0{,}0\ \text{mm}}$

a_{10} = 60 ° ± 1°

The teeth in the reel engagement hole shall have a radius

r_5 = 0,2 mm max.

The depth of the reel driving hole within diameter d_3 shall be

l_{108} = 9,4 mm min.

$d_3 = 6{,}50\ \text{mm}\ ^{+\ 0{,}08\ \text{mm}}_{-\ 0{,}00\ \text{mm}}$

When the cartridge is within the drive, the tape centre line shall be in a plane parallel to Plane Z at a distance

l_{109} = 7,05 mm ± 0,10 mm

and the Support areas of the reels shall be at a distance from Plane Z defined by

l_{110} = 0,6 mm ± 0,2 mm

The penetration of the reel drive spindle into the reel shall be defined by

l_{111} = 7,5 mm max.
l_{112} = 8,0 mm max.
a_{11} = 60° ± 1°

When the cartridge is mounted within the drive, so that the Support areas are at a distance l_{110} from Plane Z, a force F = 0,6 N ± 0,2 N shall be exerted on the cartridge in the direction shown in figure 23.

8.17 Light path (figures 10, 12, 20 and 21)

A light path shall be provided for sensing the leader and trailer tapes. When the lid is open, an unobstructed light path shall exist from the d_{10} diameter light path hole to the outside of the cartridge via square windows in the light path hole (see cross-section D-D in figure 12) and the light window in the cartridge lid.

© ISO/IEC 2000 – All rights reserved
Copyright International Organization for Standardization
Provided by IHS under license with ISO
No reproduction or networking permitted without license from IHS
Not for Resale

The centre of the light path hole shall be defined by l_{82} and

l_{115} = 8,35 mm ± 0,10 mm

The diameter of the light path hole shall be

$d_{10} = 6{,}5\ \text{mm}\ ^{+\ 0{,}3\ \text{mm}}_{-\ 0{,}0\ \text{mm}}$

The light path hole shall have a chamfer defined by

l_{116} = 0,5 mm max.

a_{12} = 45° ± 1°

The position and size of the square window on each side of the light path hole shall be defined by

l_{117} = 6,05 mm ± 0,10 mm

$l_{118} = 2{,}5\ \text{mm}\ ^{+\ 0{,}4\ \text{mm}}_{-\ 0{,}0\ \text{mm}}$

where l_{118} is the length of the side of the square window.

The hole shall be deep enough to allow penetration of a light emitter over a distance of

l_{119} = 12,5 mm min.

The angle of the light path shall be

a_{13} = 5,50° ± 0,25°

The position and size of the cartridge lid window shall be

l_{120} = 3,8 mm ± 0,1 mm

$l_{121} = 2{,}5\ \text{mm}\ ^{+\ 0{,}4\ \text{mm}}_{-\ 0{,}0\ \text{mm}}$

l_{122} = 6,05 mm ± 0,10 mm

8.18 Position of the tape in the case (figure 21)

The tape shall run between two guide surfaces in a plane parallel to Plane X and l_{123} from it.

l_{123} = 13,15 mm ± 0,10 mm

The guide surfaces shall have a radius of r_6 and shall be tangential, as shown in figure 21, to lines tangential to the reel hubs that extend to points outside the case.

r_6 = 3,0 mm ± 0,1 mm

These points shall be defined by

l_{124} = 76,28 mm ± 0,30 mm

l_{125} = 27,15 mm ± 0,20 mm

l_{126} = 31,15 mm ± 0,20 mm

l_{127} = 9,67 mm ± 0,10 mm

8.19 Tape path zone

When the cartridge is inserted into the drive, the tape is pulled outside the case by tape guides and is no longer in contact with the guide surfaces. The tape path zone (see figure 21) of the case is the zone in which the tape shall be able to move freely. This zone shall be maintained for both sides of the case and shall be defined by l_{124} to l_{127} and

l_{128} = 23,0 mm ± 0,1 mm

l_{130} = 46,2 mm ± 0,2 mm

l_{131} = 11,4 mm ± 0,1 mm

© ISO/IEC 2000 – All rights reserved

Copyright International Organization for Standardization
Provided by IHS under license with ISO
No reproduction or networking permitted without license from IHS
Not for Resale

The clearance between the tape and the guides shall be defined by

l_{129} = 0,3 mm min.
l_{132} = 0,3 mm min.

8.20 Tape access cavity (figure 10)

When the cartridge is inserted into the drive, tape guides in the drive pull the tape into the drive tape path. The two radii r_7 are centred on Datum holes A and B. The shape and dimensions of the access cavity for these tape guides shall be defined by l_{63} and l_{64}, and the following

r_7 = 2,3 mm ± 0,1 mm

The two radii r_8 are centred on the centres of the reel access holes.

r_8 = 24,15 mm ± 0,10 mm
l_{133} = 3,85 mm ± 0,10 mm

8.21 Tape access cavity clearance (figure 24)

The case design shall provide clearance for drive tape threading mechanisms. This clearance shall be defined by

l_{134} = 1,2 mm max.

$l_{135} = 1{,}15\ \text{mm}\ {}^{+\ 0{,}20\ \text{mm}}_{-\ 0{,}00\ \text{mm}}$

$l_{136} = 14{,}0\ \text{mm}\ {}^{+\ 0{,}0\ \text{mm}}_{-\ 0{,}2\ \text{mm}}$

l_{137} = 66,8 mm min.
l_{138} = 10,0 mm min.
l_{139} = 66,8 mm min.
l_{140} = 1,2 mm max.
a_{14} = 49° max.
l_{141} = 14,8 mm min.
l_{159} = 13,0 mm min.
l_{170} = 4,0 mm max.

8.22 Requirements for the MIC (figures 25 and 26)

The MIC shall be a chip built into the case (See annex L). It can be accessed through five Access Holes. The MIC shall be mounted in the case so that, when inserted into the drive, the contacts of the drive match those of the MIC when they penetrate into the five Access Holes by at least 1,70 mm. The interface shall be I^2C™. The capacity of the MIC shall be indicated on the top side of the case.

The positions and dimensions of these Access Holes are as follows.

Access Hole GND

$l_{165} = 67{,}2\ \text{mm}\ {}^{+\ 0{,}0\ \text{mm}}_{-\ 0{,}2\ \text{mm}}$

$l_{166} = 69{,}0\ \text{mm}\ {}^{+\ 0{,}2\ \text{mm}}_{-\ 0{,}0\ \text{mm}}$

Access Hole SCL

$l_{167} = 70{,}0\ \text{mm}\ {}^{+\ 0{,}0\ \text{mm}}_{-\ 0{,}2\ \text{mm}}$

+ 0,2 mm

© ISO/IEC 2000 – All rights reserved
Copyright International Organization for Standardization
Provided by IHS under license with ISO
No reproduction or networking permitted without license from IHS
Not for Resale

l_{168} = 71,8 mm $^{+\ 0,0\ mm}_{-\ 0,0\ mm}$

Access Hole ID

l_{169} = 72,8 mm $^{+\ 0,0\ mm}_{-\ 0,2\ mm}$

l_{147} = 74,6 mm $^{+\ 0,2\ mm}_{-\ 0,0\ mm}$

Access Hole SDA

l_{148} = 75,6 mm $^{+\ 0,0\ mm}_{-\ 0,2\ mm}$

l_{149} = 77,4 mm $^{+\ 0,2\ mm}_{-\ 0,0\ mm}$

Access Hole Vcc

l_{150} = 78,4 mm $^{+\ 0,0\ mm}_{-\ 0,2\ mm}$

l_{151} = 80,2 mm $^{+\ 0,2\ mm}_{-0,0\ mm}$

The following dimensions shall apply to all Access Holes.

l_{152} = 5,1 mm $^{+\ 0,2\ mm}_{-\ 0,0\ mm}$

l_{153} = 1,4 mm $^{+\ 0,3\ mm}_{-\ 0,1\ mm}$

There shall be a chamfer around the outside of these holes defined by

l_{154} = 0,4 mm ± 0,1 mm

a_{17} = 45° ± 1°

When the cartridge is inserted into the drive, the pin used to recognise the cartridge penetrates through Recognition hole 3. The cavity shown shaded in cross-section N-N in figure 26 is required for this pin. This cavity shall be defined by l_{143}, l_{144} and

l_{157} = 5,0 mm min.

l_{158} = 1,5 mm max.

l_{160} = 45,4 mm min.

8.23 Recognition recesses (figures 8 and 10)

The cartridge shall have two recesses on the rear side. These recesses are used to recognise the cartridge in a library system. They shall be defined by

l_{161} = 8,4 mm $^{+\ 0,0\ mm}_{-\ 0,2\ mm}$

l_{162} = 6,0 mm $^{+\ 0,2\ mm}_{-\ 0,0\ mm}$

--`,,```,,,,````-`-`,,`,,`,`,,`---

© ISO/IEC 2000 – All rights reserved

Copyright International Organization for Standardization
Provided by IHS under license with ISO
No reproduction or networking permitted without license from IHS
Not for Resale

$l_{163} = 2{,}0\ ^{+0{,}2\ \text{mm}}_{-0{,}0\ \text{mm}}$

$l_{164} = 2{,}0\ ^{+0{,}2\ \text{mm}}_{-0{,}1\ \text{mm}}$

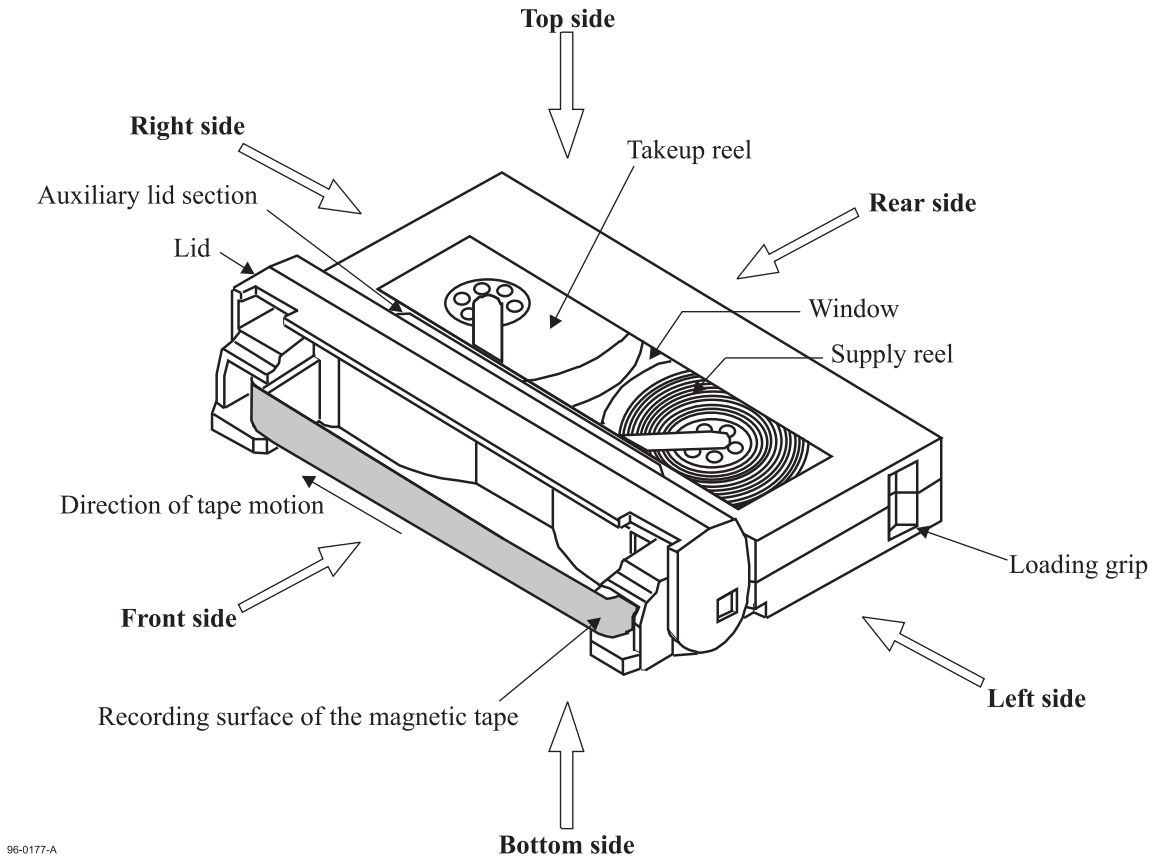

Figure 1 - Tape cartridge assembly, top view, lid open

© ISO/IEC 2000 – All rights reserved
Copyright International Organization for Standardization
Provided by IHS under license with ISO
No reproduction or networking permitted without license from IHS
Not for Resale

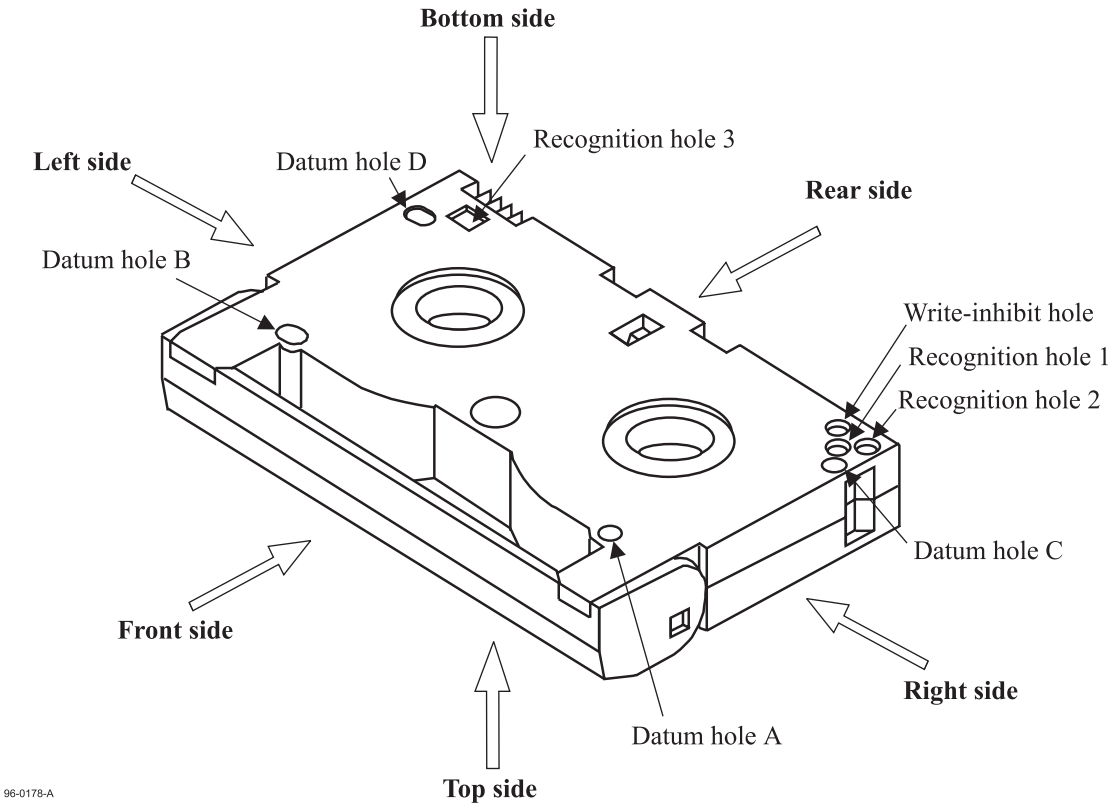

Figure 2 - Tape cartridge assembly, bottom view, lid closed

© ISO/IEC 2000 – All rights reserved

Copyright International Organization for Standardization
Provided by IHS under license with ISO
No reproduction or networking permitted without license from IHS
Not for Resale

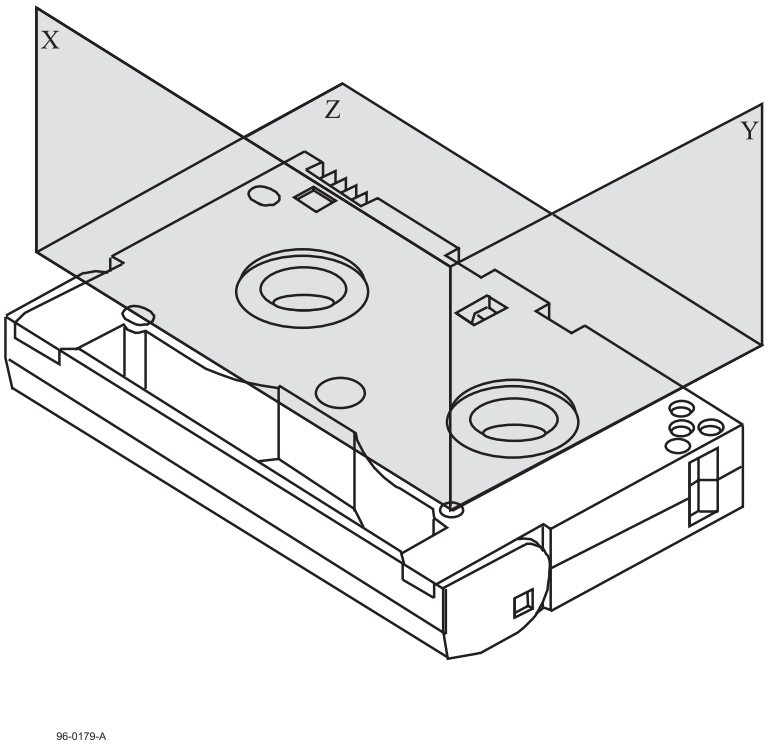

Figure 3 - Reference Planes X, Y, Z

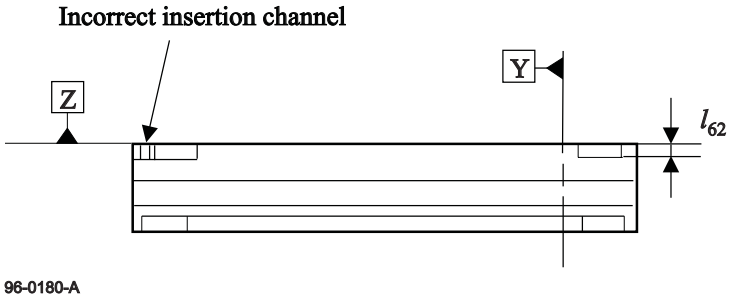

Figure 4 - Front side, lid closed

© ISO/IEC 2000 – All rights reserved
Copyright International Organization for Standardization
Provided by IHS under license with ISO
No reproduction or networking permitted without license from IHS
Not for Resale

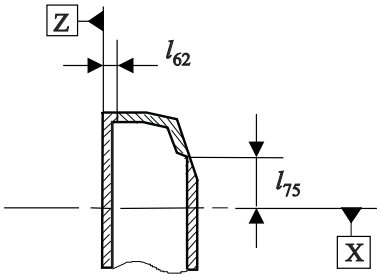

Section B-B

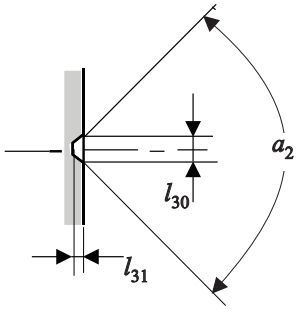

Section A-A

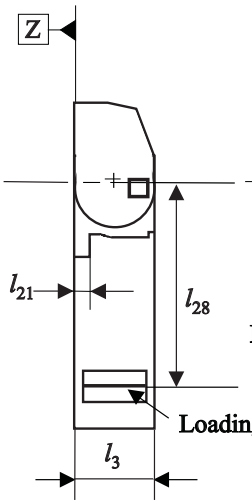

Figure 5 - Left side, lid closed

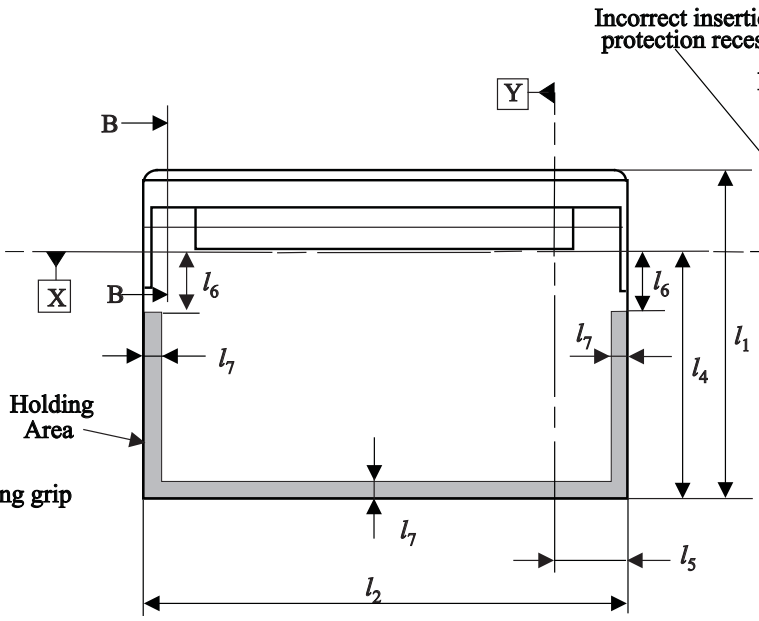

Figure 6 - Top side, lid closed

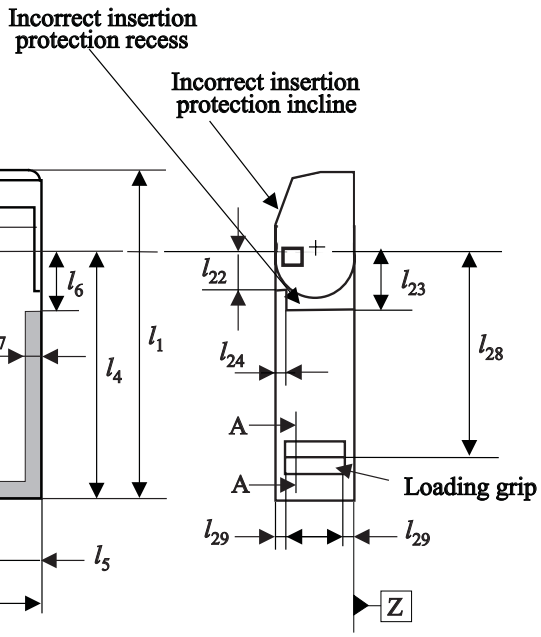

Figure 7 - Right side, lid closed

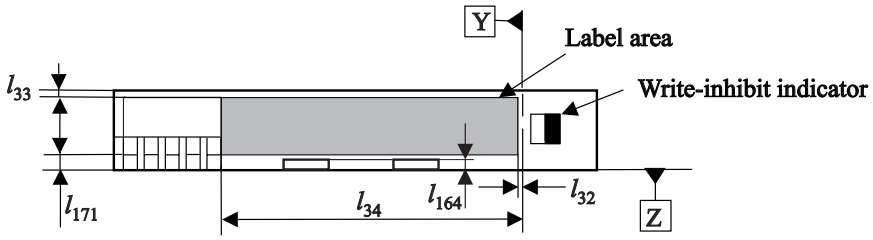

96-0181-A

Figure 8 - Rear side, lid closed

© ISO/IEC 2000 – All rights reserved
Copyright International Organization for Standardization
Provided by IHS under license with ISO
No reproduction or networking permitted without license from IHS
Not for Resale

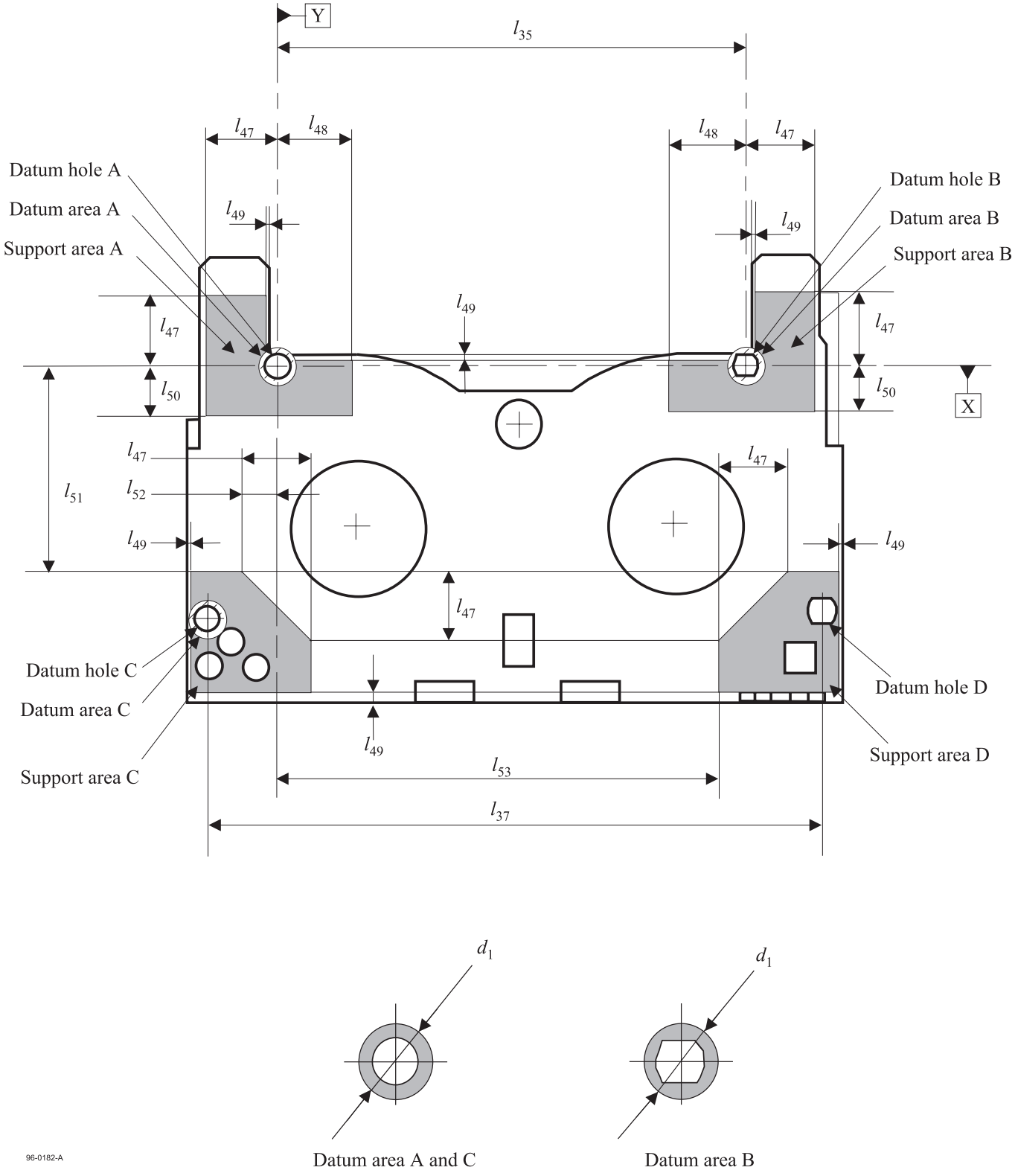

Figure 9 - Bottom side, Datum and Support areas

© ISO/IEC 2000 – All rights reserved
Copyright International Organization for Standardization
Provided by IHS under license with ISO
No reproduction or networking permitted without license from IHS
Not for Resale

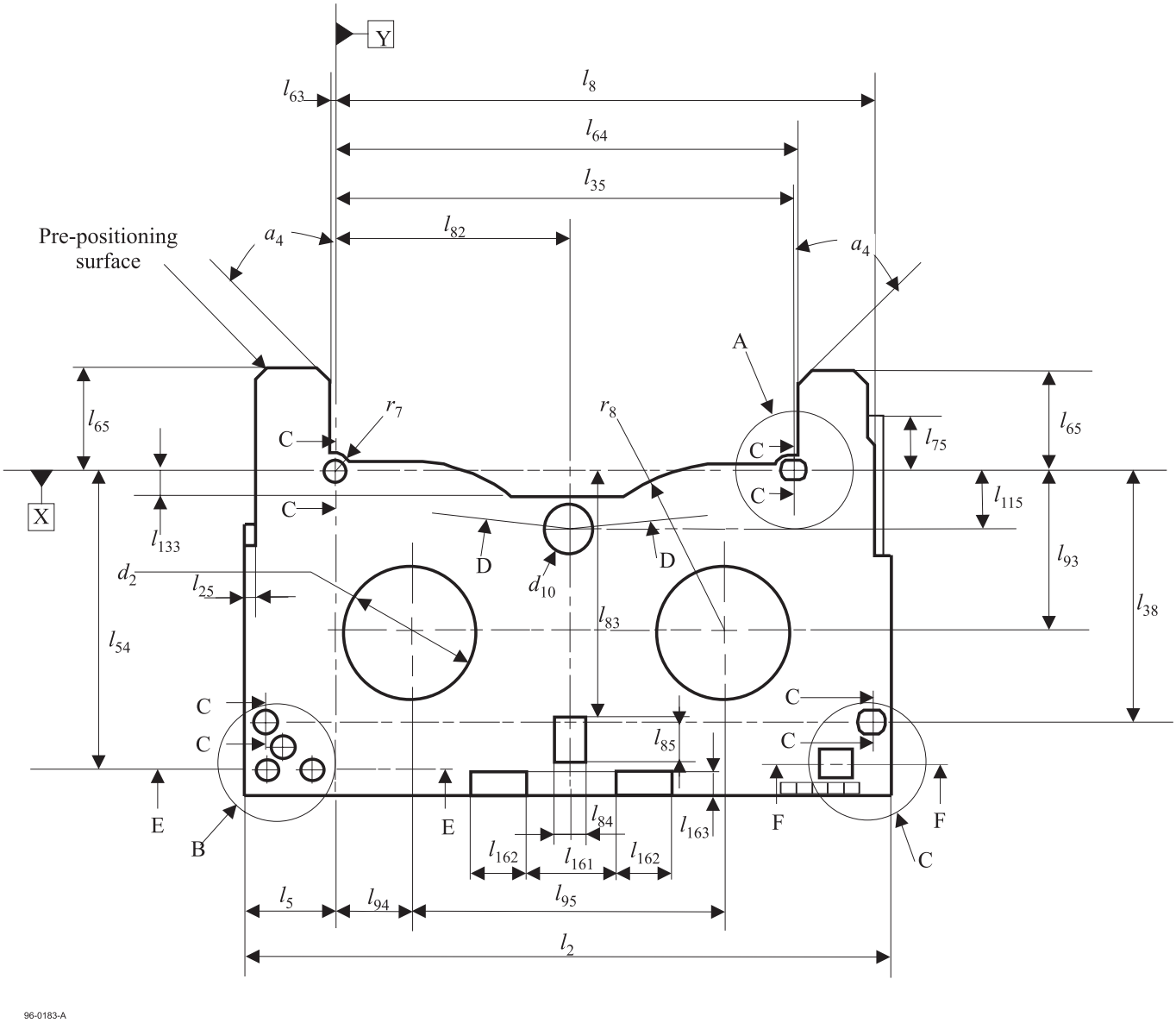

Figure 10 - Bottom side, lid removed

© ISO/IEC 2000 – All rights reserved
Copyright International Organization for Standardization
Provided by IHS under license with ISO
No reproduction or networking permitted without license from IHS
Not for Resale

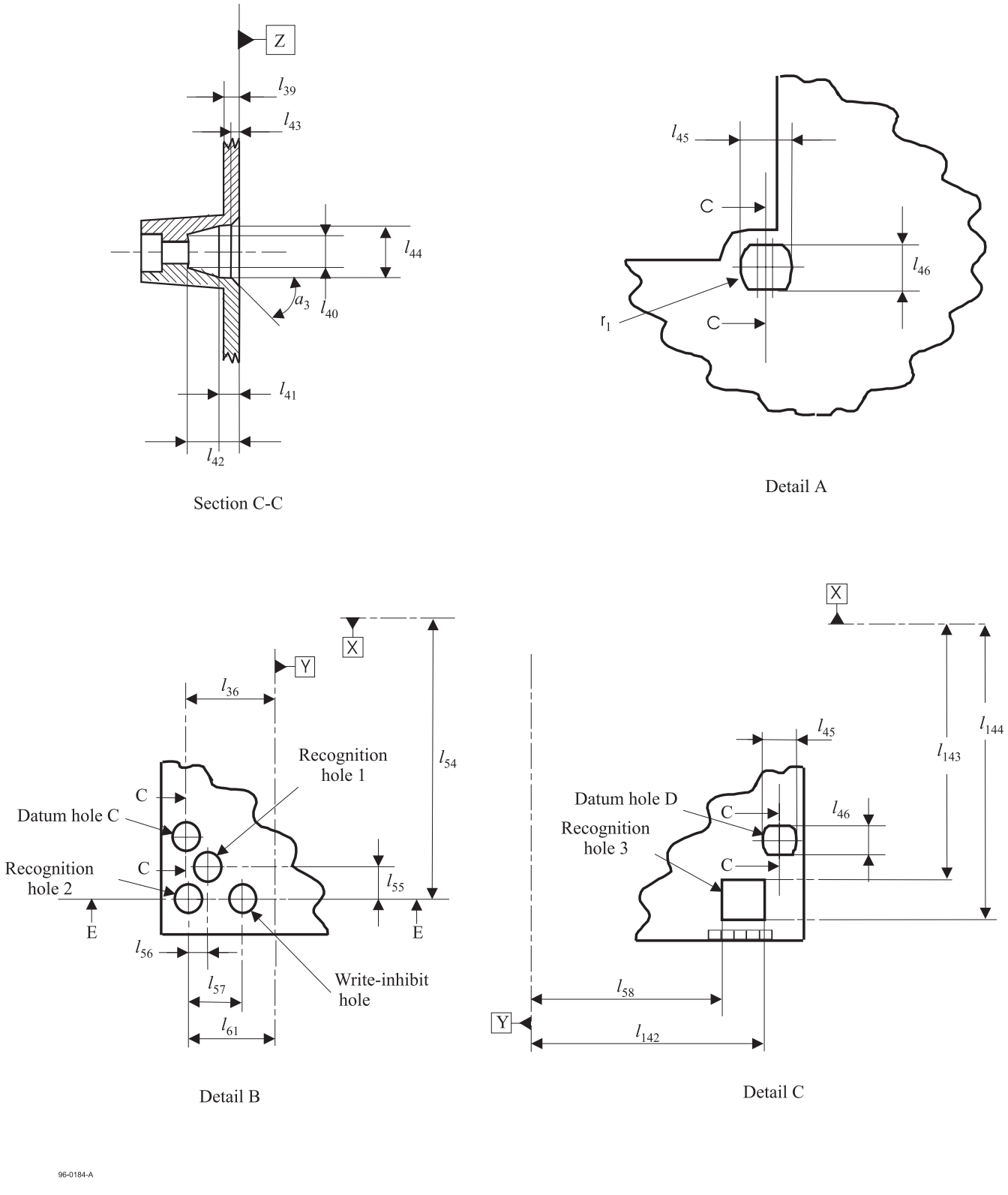

Figure 11 - Details of the Datum, Recognition and Write-inhibit holes

--`,,```,,,,````-`-`,,`,,`,`,,`---
© ISO/IEC 2000 – All rights reserved
Copyright International Organization for Standardization
Provided by IHS under license with ISO
No reproduction or networking permitted without license from IHS
Not for Resale

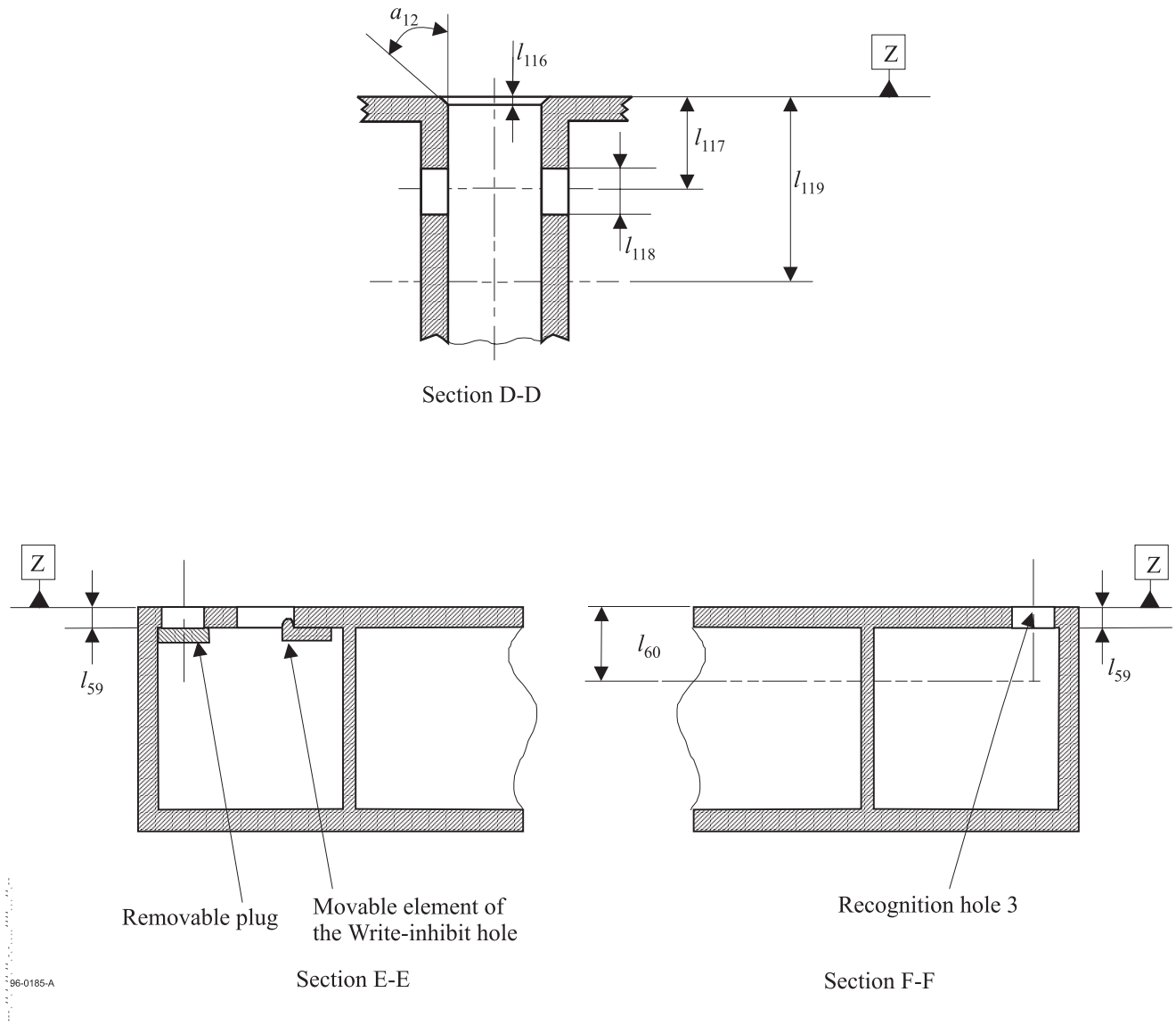

Figure 12 - Cross-sections showing the light path hole, the Recognition and Write-inhibit holes

© ISO/IEC 2000 – All rights reserved
Copyright International Organization for Standardization
Provided by IHS under license with ISO
No reproduction or networking permitted without license from IHS
Not for Resale

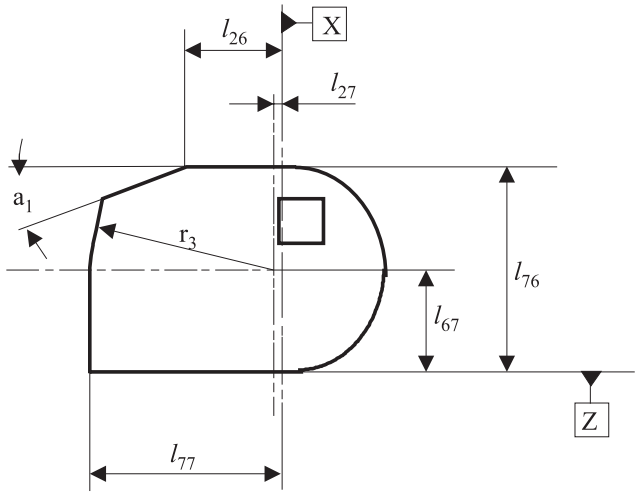

Details of the side of the lid

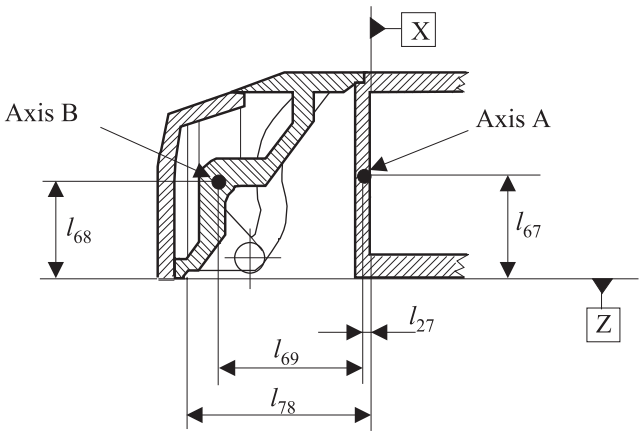

Internal structure of the lid

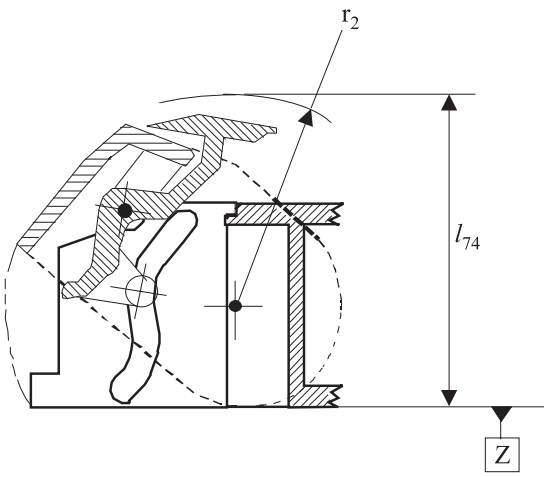

Lid configuration
when rotating

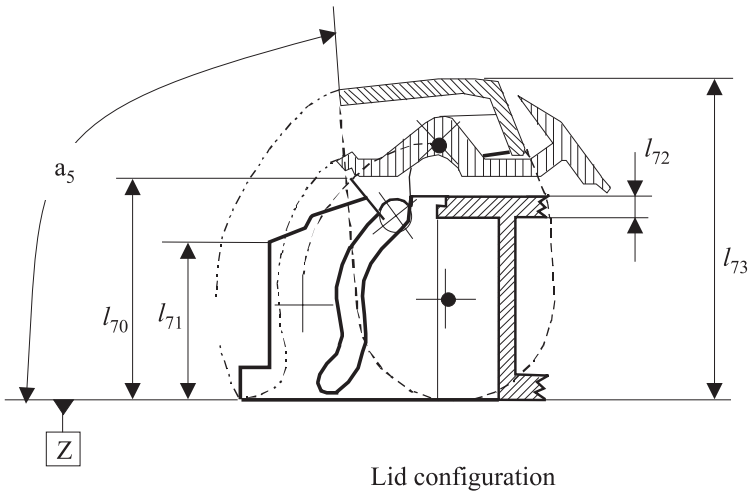

Lid configuration
when the lid is open

96-0186-A

Figure 13 - Lid

© ISO/IEC 2000 – All rights reserved
Copyright International Organization for Standardization
Provided by IHS under license with ISO
No reproduction or networking permitted without license from IHS
Not for Resale

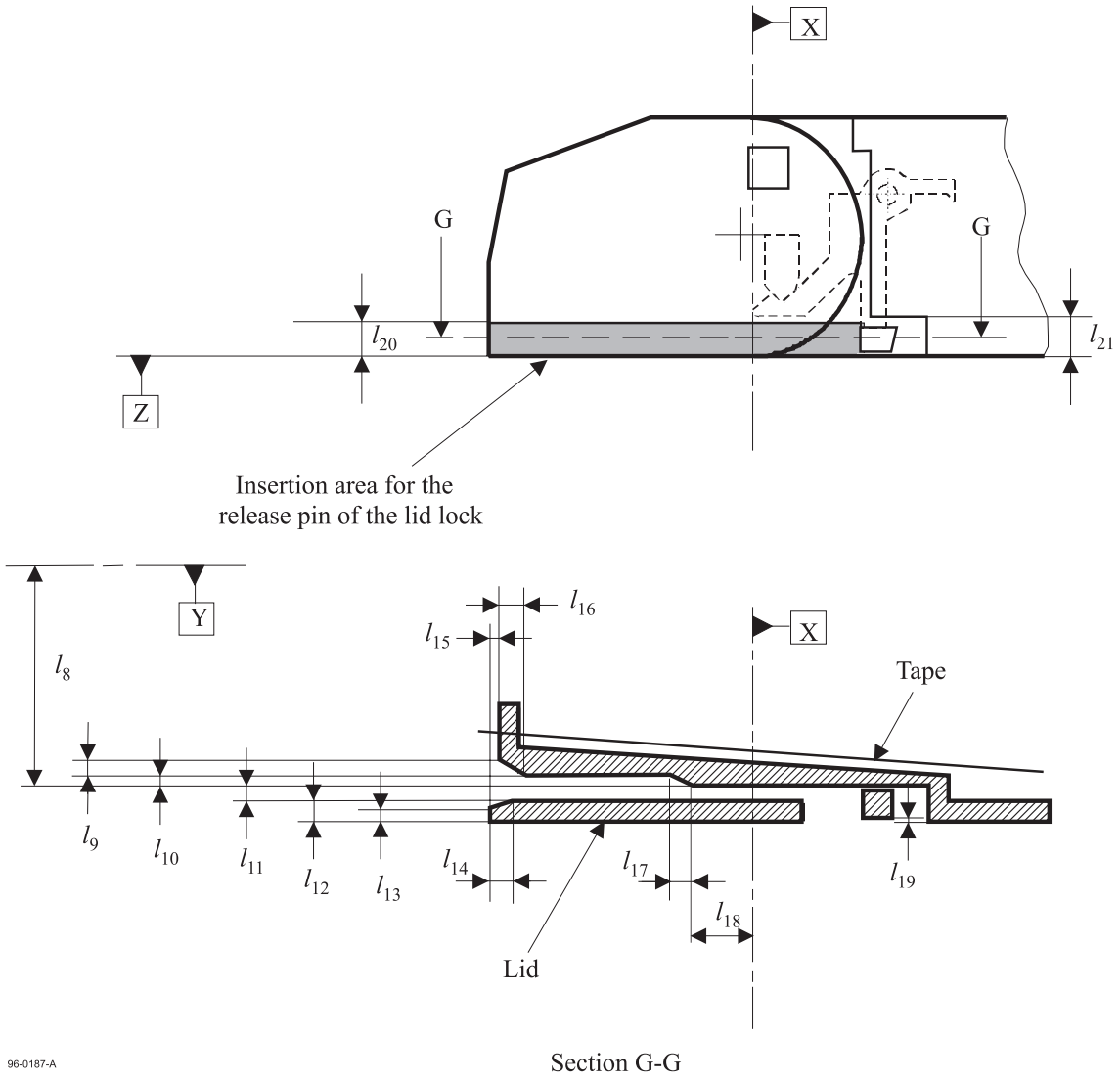

Figure 14 - Lid release insertion channel

© ISO/IEC 2000 - All rights reserved

Copyright International Organization for Standardization
Provided by IHS under license with ISO
No reproduction or networking permitted without license from IHS
Not for Resale

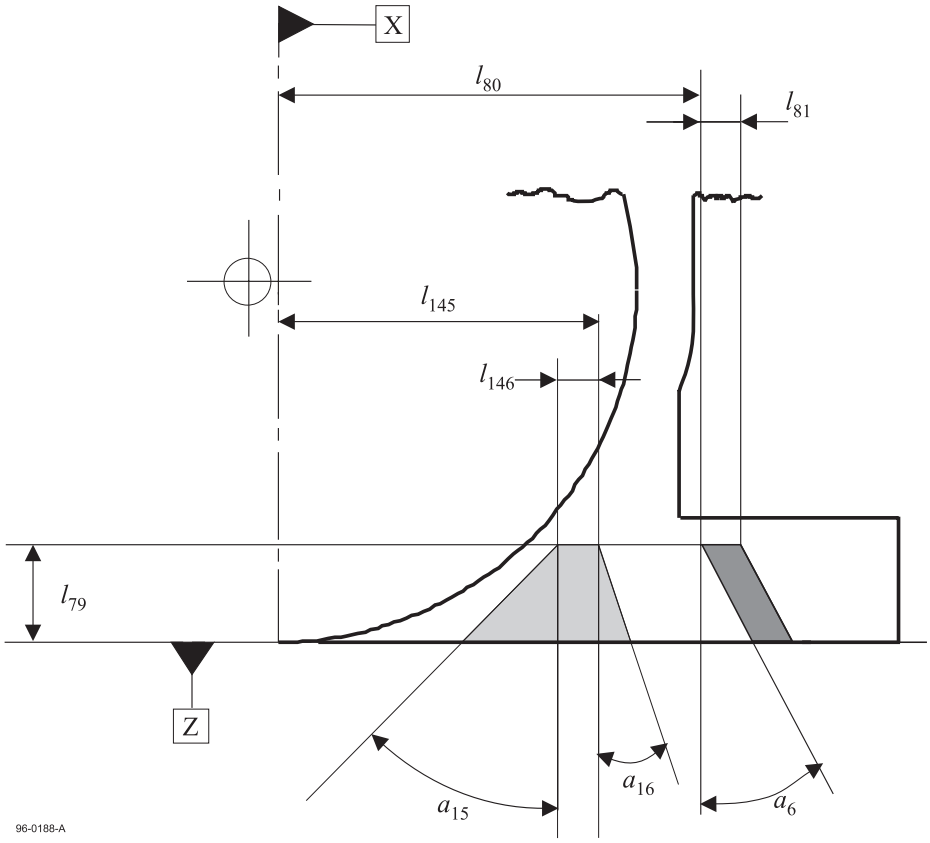

Figure 15 - Lid release requirements

© ISO/IEC 2000 – All rights reserved
Copyright International Organization for Standardization
Provided by IHS under license with ISO
No reproduction or networking permitted without license from IHS
Not for Resale

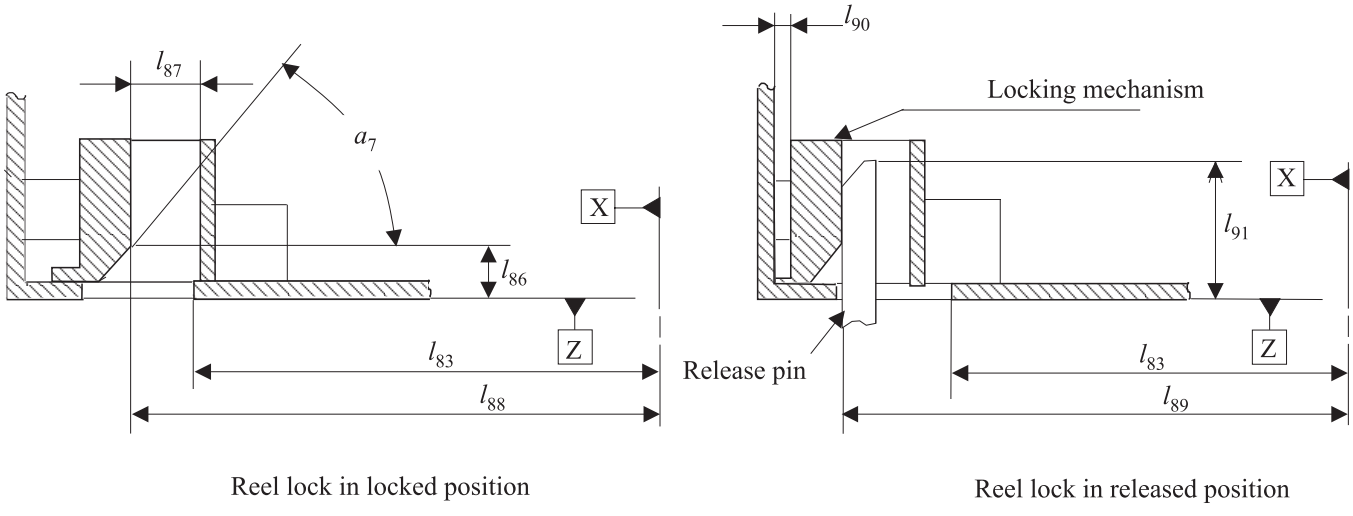

Reel lock in locked position

Reel lock in released position

Section L-L of figure 21

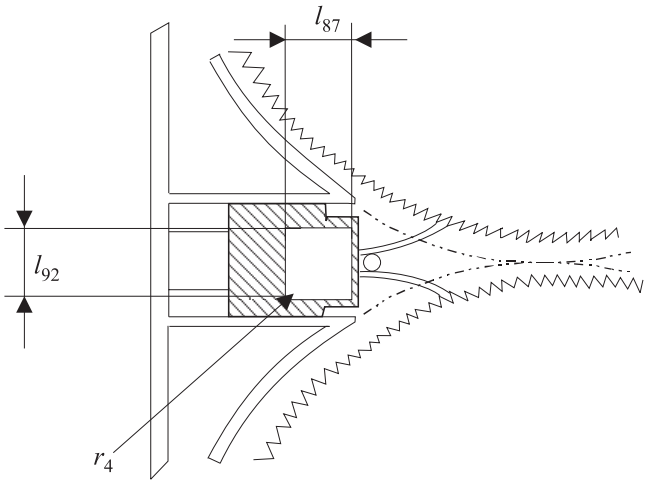

Detail E
of figure 21

96-0189-A

Figure 16 - Reel lock release

--`,,```,,,,````-`-`,,`,,`,`,,`---
© ISO/IEC 2000 – All rights reserved
Copyright International Organization for Standardization
Provided by IHS under license with ISO
No reproduction or networking permitted without license from IHS
Not for Resale

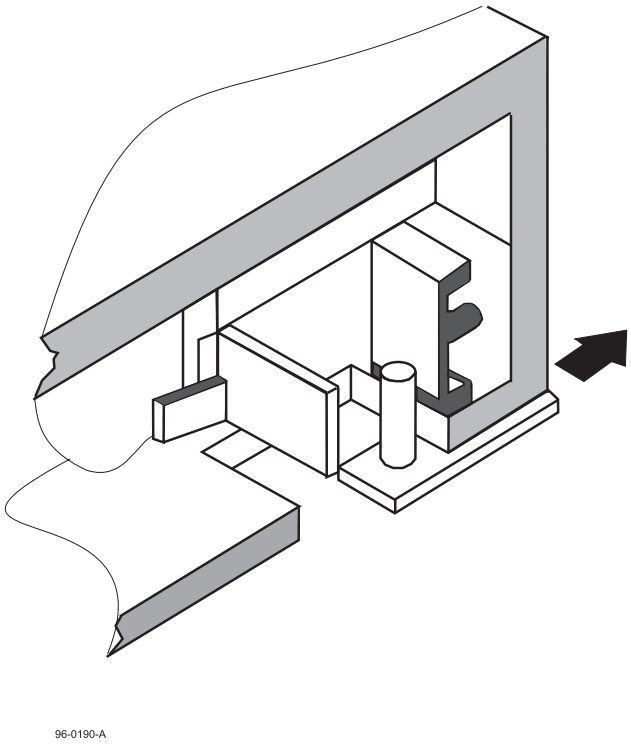

Figure 17 - Direction of the force needed to unlock the reel lock

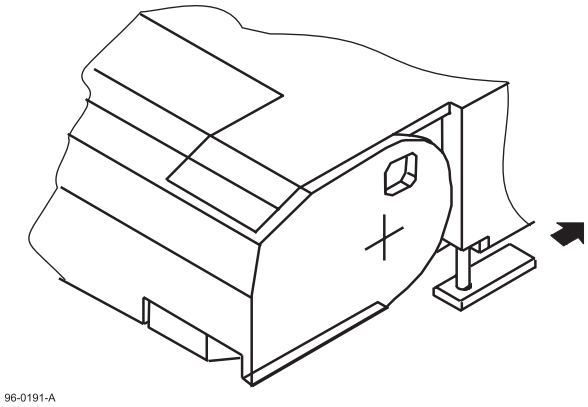

Figure 18 - Direction of the force needed to unlock the lid lock

© ISO/IEC 2000 – All rights reserved
Copyright International Organization for Standardization
Provided by IHS under license with ISO
No reproduction or networking permitted without license from IHS
Not for Resale

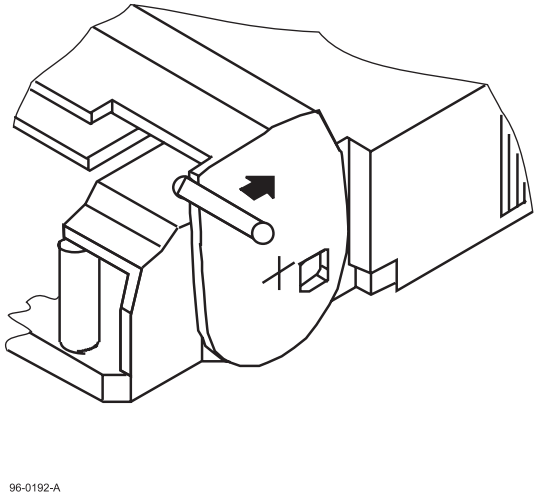

Figure 19 - Direction of the force needed to open the lid

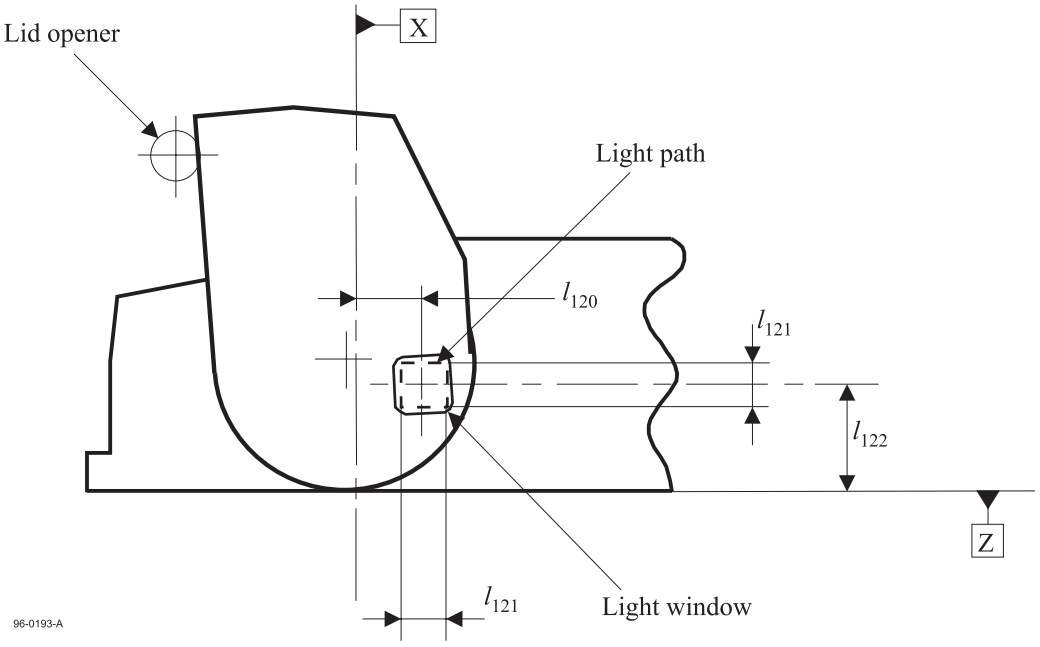

Figure 20 - Light path and light windows

© ISO/IEC 2000 – All rights reserved
Copyright International Organization for Standardization
Provided by IHS under license with ISO
No reproduction or networking permitted without license from IHS
Not for Resale

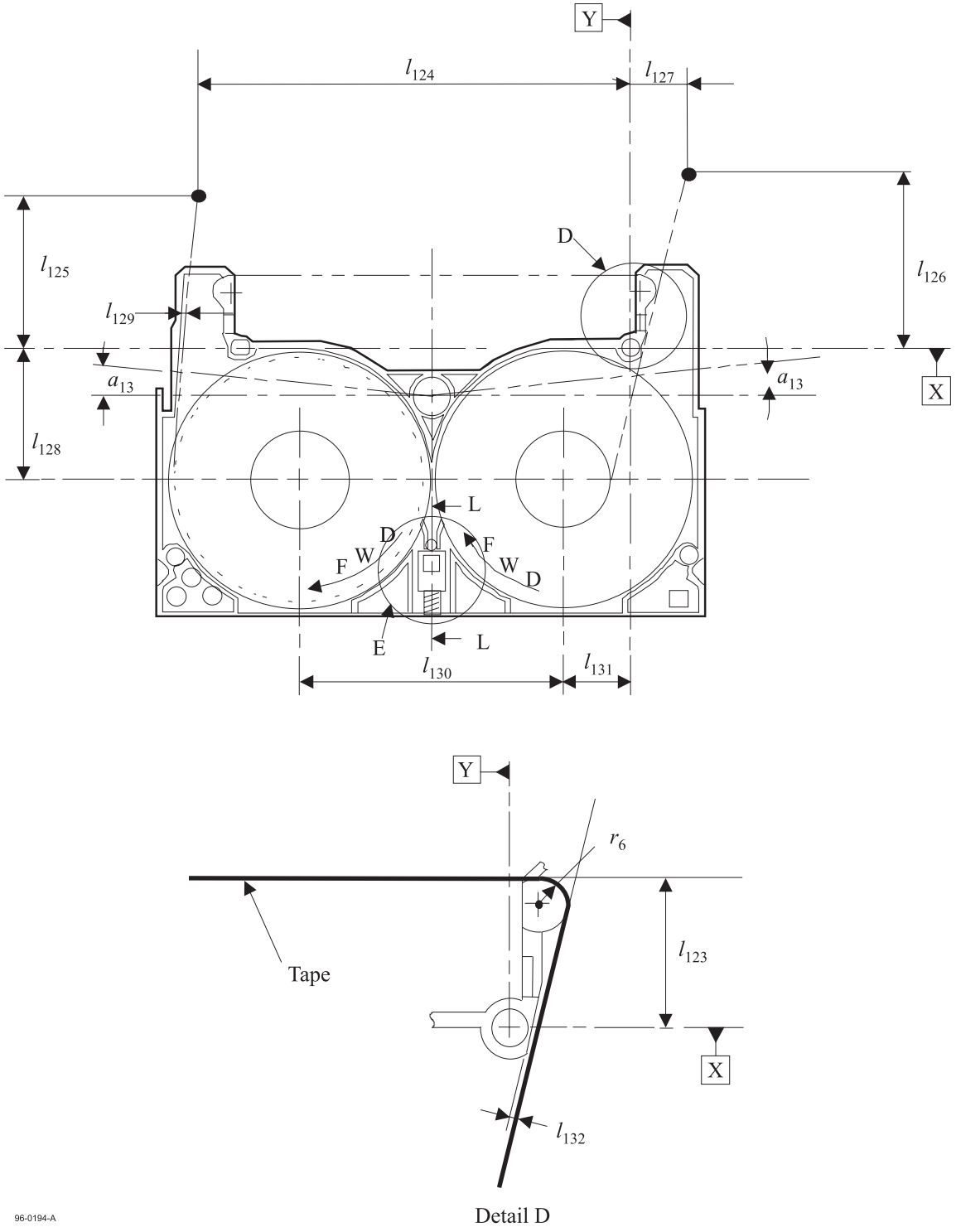

Figure 21 - Internal tape path and light path

--`,,```,,,,````-`-`,,`,,`,`,,`---
© ISO/IEC 2000 – All rights reserved
Copyright International Organization for Standardization
Provided by IHS under license with ISO
No reproduction or networking permitted without license from IHS
Not for Resale

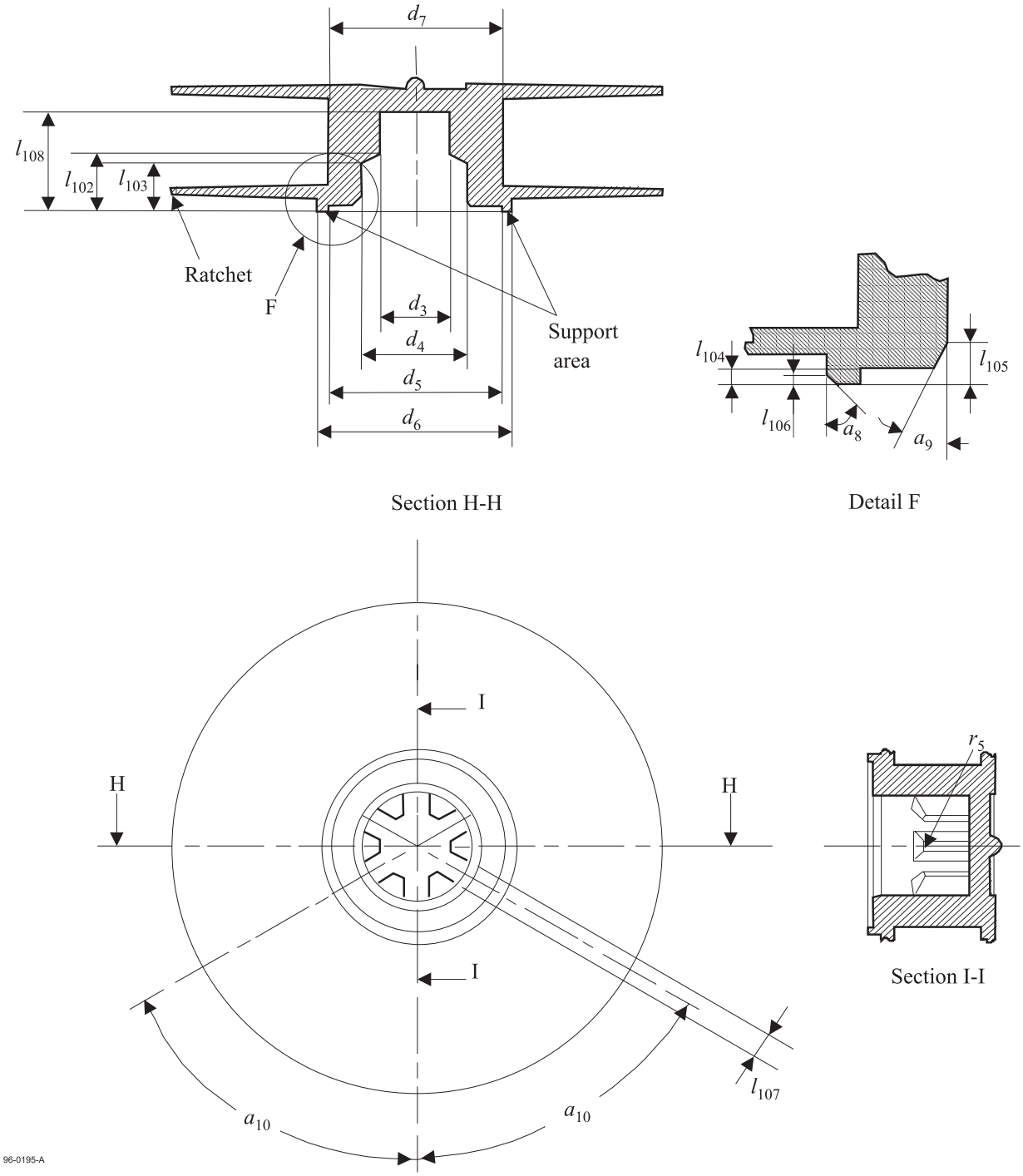

Figure 22 - Cartridge reel

© ISO/IEC 2000 – All rights reserved
Copyright International Organization for Standardization
Provided by IHS under license with ISO
No reproduction or networking permitted without license from IHS
Not for Resale

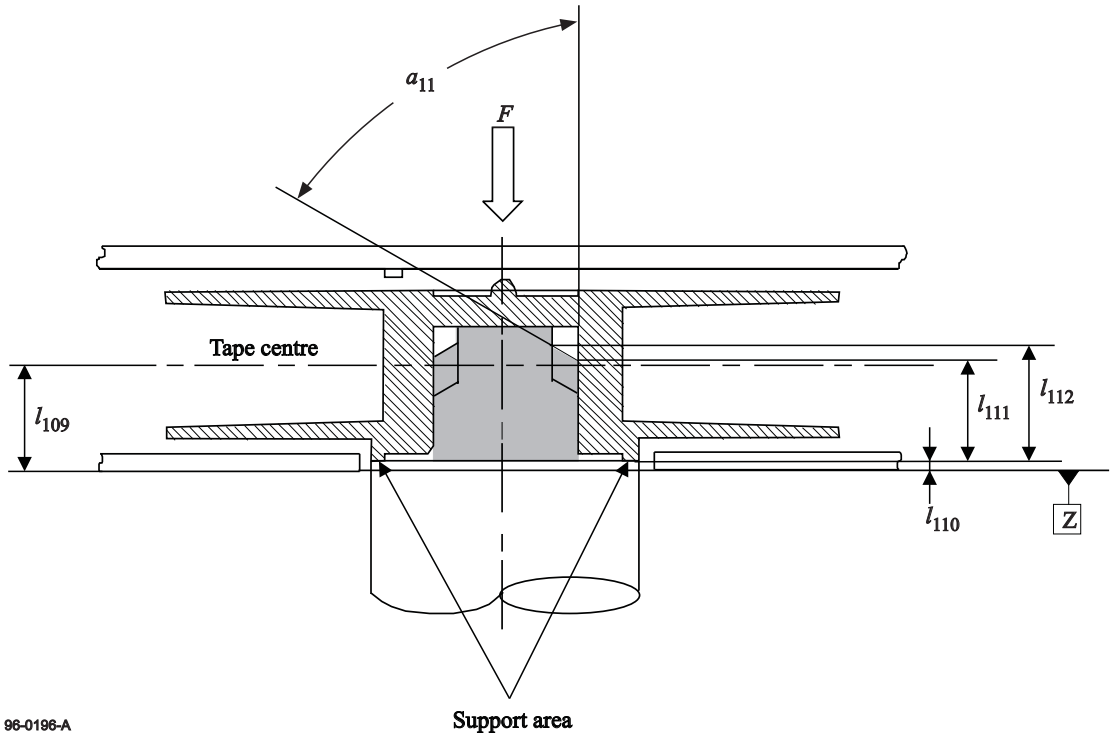

Figure 23 - Interface with the drive spindle

© ISO/IEC 2000 – All rights reserved
Copyright International Organization for Standardization
Provided by IHS under license with ISO
No reproduction or networking permitted without license from IHS
Not for Resale

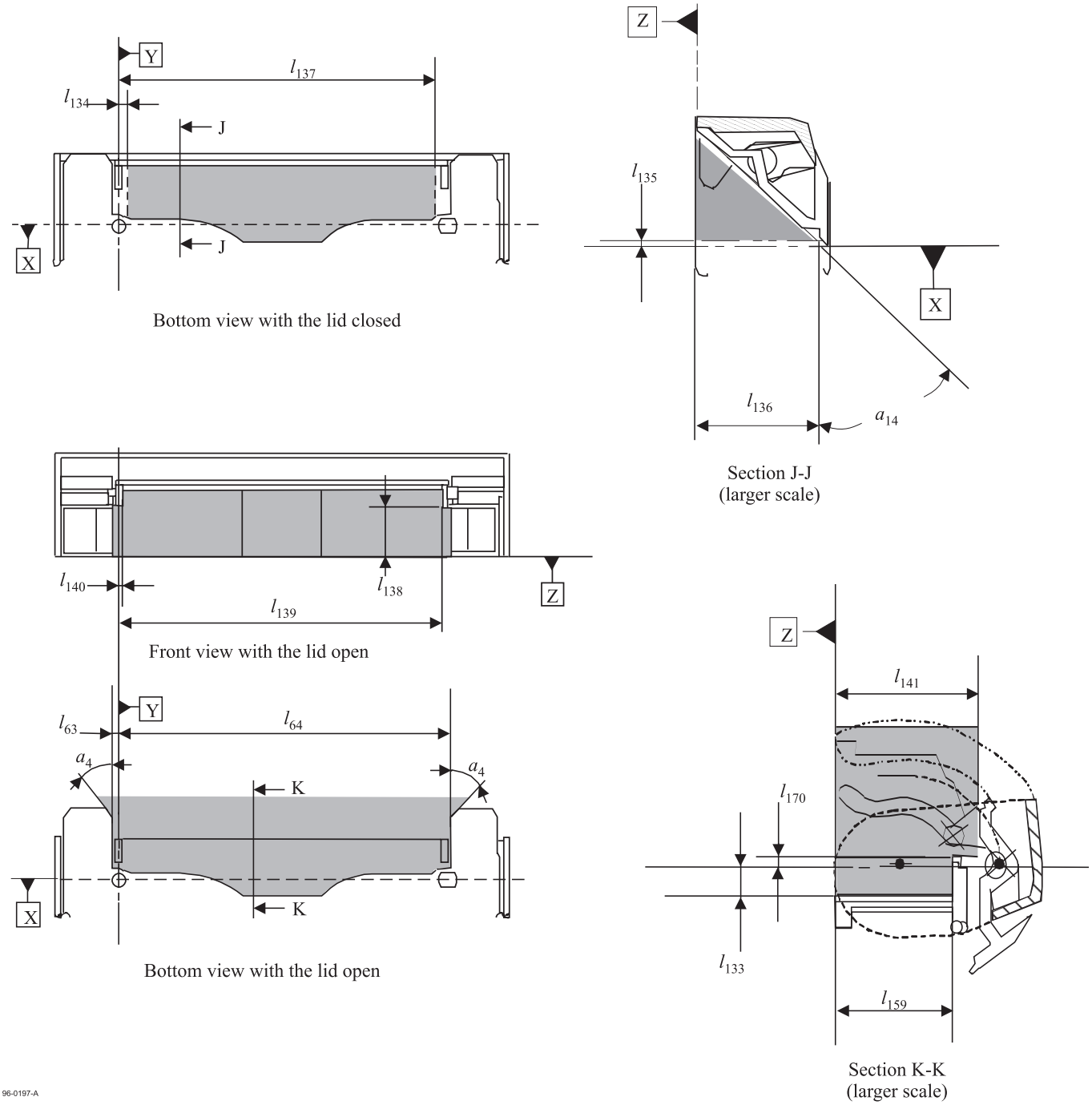

Figure 24 - Tape access cavity clearance

© ISO/IEC 2000 – All rights reserved

Copyright International Organization for Standardization
Provided by IHS under license with ISO
No reproduction or networking permitted without license from IHS
Not for Resale

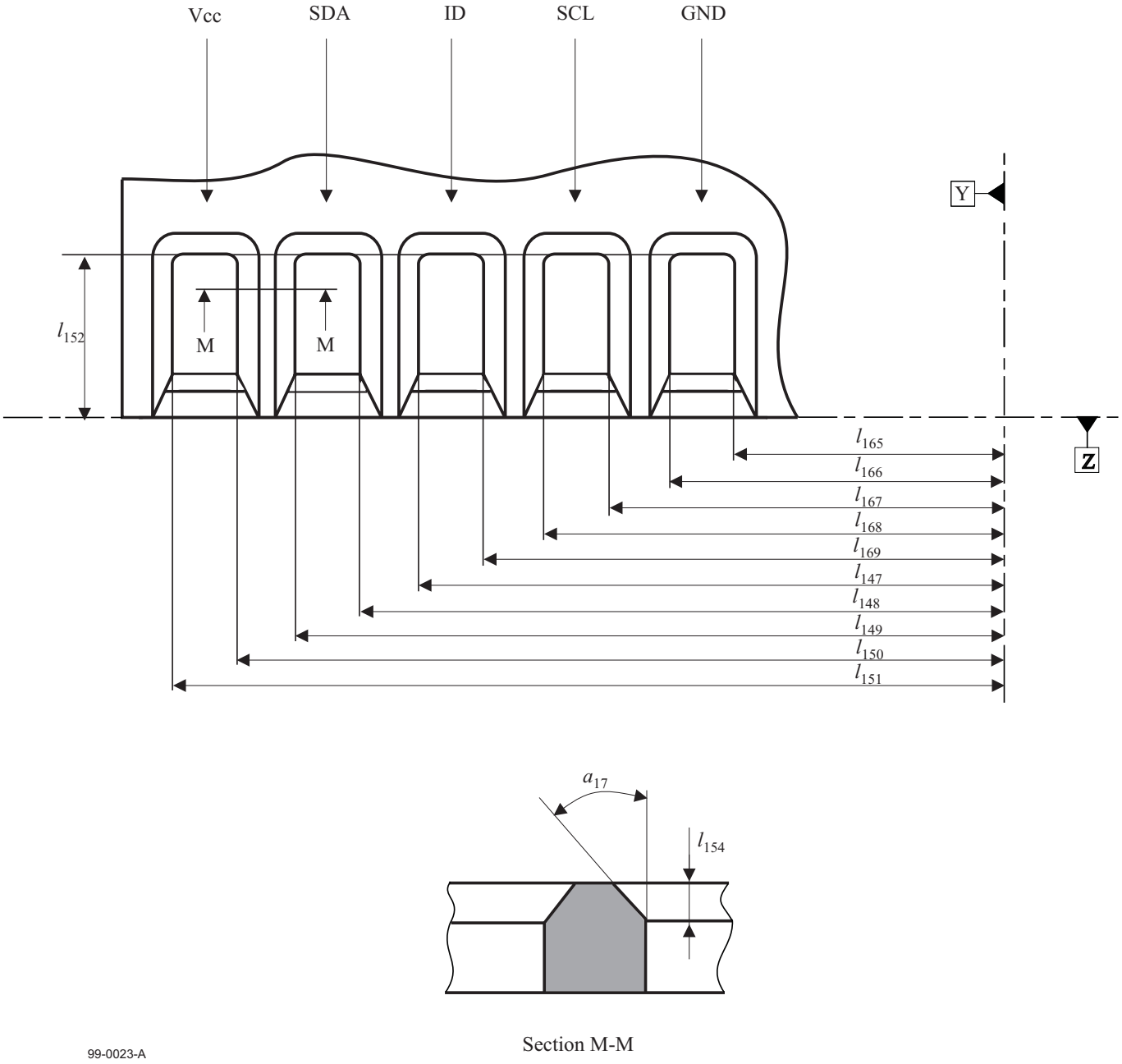

Figure 25 - MIC access holes, enlarged partial view, rear side

© ISO/IEC 2000 – All rights reserved
Copyright International Organization for Standardization
Provided by IHS under license with ISO
No reproduction or networking permitted without license from IHS
Not for Resale

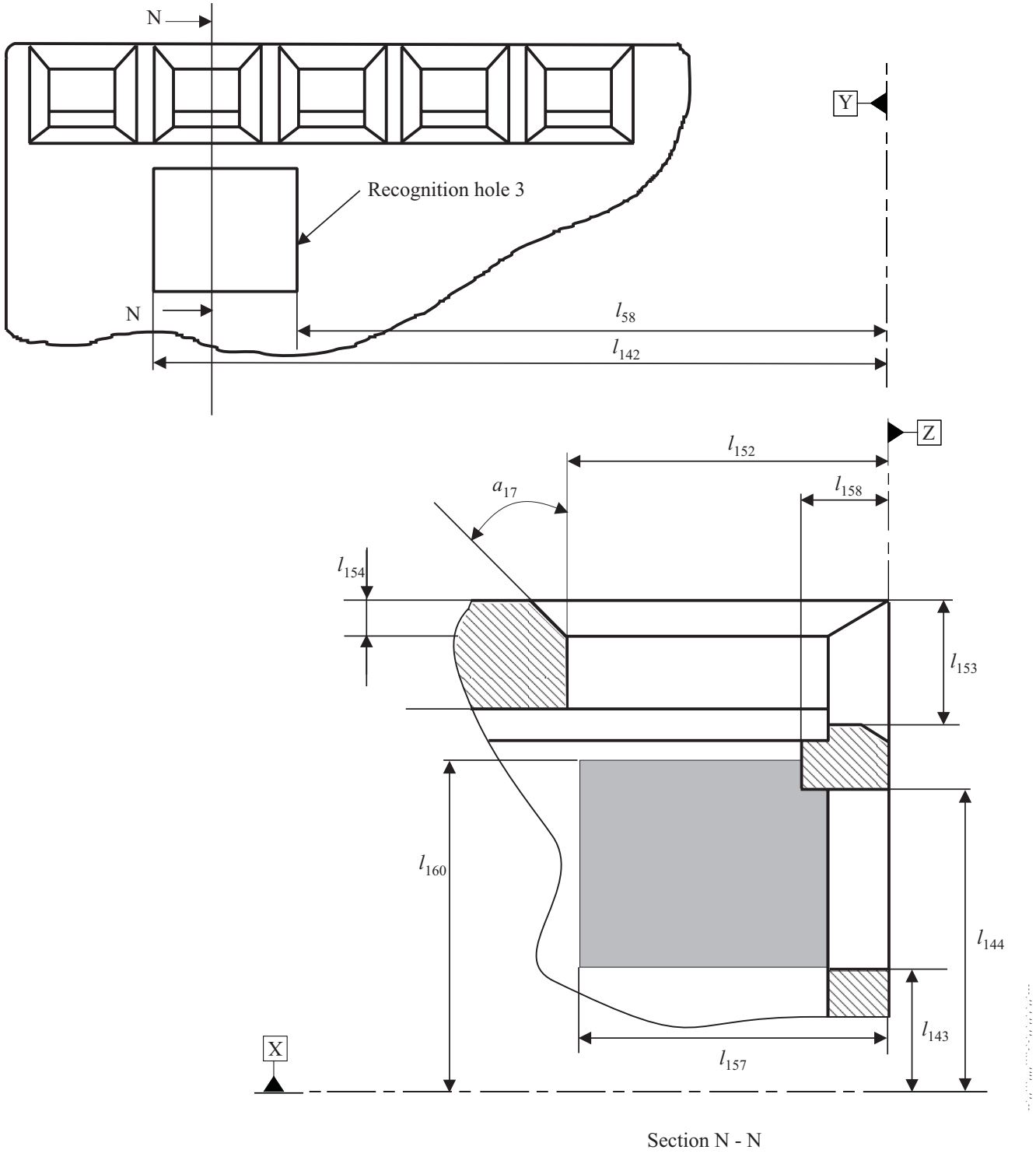

Figure 26 - MIC access holes, enlarged partial view, bottom side

© ISO/IEC 2000 – All rights reserved
Copyright International Organization for Standardization
Provided by IHS under license with ISO
No reproduction or networking permitted without license from IHS
Not for Resale

Section 3 - Requirements for the unrecorded tape

9 Mechanical, physical and dimensional characteristics of the tape

This International Standard specifies two types of cartridge depending on the thickness of the tape.

Type A : The nominal thickness of the tape shall be 7,0 μm.
Type B : The nominal thickness of the tape shall be 5,2 μm.

9.1 Materials

The recordable area of the tape shall consist of a base material coated on one side with a strong yet flexible layer of evaporated metal material or equivalent. The back surface may be coated. The base material shall be

For Type A : An oriented polyethylene terephthalate film or equivalent
For Type B : A polyaramid film or equivalent

There shall be a leader tape between the take-up hub and PBOT. There shall be a trailer tape between PEOT and the supply hub. The leader and trailer tapes shall consist of a translucent length of the same oriented polyethylene terephthalate or an equivalent base material.

The leader and trailer tapes shall each be attached to the magnetic tape by means of a length of splicing tape which extends over each such joint. The splicing tape shall consist of polyethylene terephthalate (or equivalent), coated on one side with an acrylic (or equivalent) adhesive material.

9.2 Tape length

9.2.1 Length of the magnetic tape

The length of the tape shall be measured between PBOT and PEOT.

Type A : The length of the tape shall be in the range 5,0 m to 170,0 m.
Type B : The length of the tape shall be in the range 5,0 m to 230,0 m.

9.2.2 Length of the leader and trailer tapes

The length of the leader and trailer tapes shall be in the range 70 mm to 90 mm. The joints between the leader and trailer tapes and the magnetic tape shall be perpendicular to the Tape Reference Edge within 1°.

9.2.3 Length of the splicing tapes

The length of the splicing tapes shall be 13 mm max. They shall extend for a distance of 6,5 mm ± 1,5 mm over the leader and trailer tapes.

9.3 Tape width

9.3.1 Width of the magnetic, leader and trailer tapes

The width of the magnetic tape shall be 8,00 mm ± 0,01 mm. The difference between the largest and smallest width shall not exceed 6 μm peak-to-peak.

The width of the leader tape and of the trailer tape shall be 8,00 mm ± 0,02 mm.

Procedure

a) Cover a section of the tape with a glass microscope slide.

b) Measure the width from edge to edge with no tension applied to the tape using a calibrated microscope, profile projector, or equivalent having an accuracy of at least 2,5 μm.

c) Repeat the measurement to obtain tape widths at a minimum of five different positions along a minimum tape length of 1,0 m.

The tape width is the average of the widths measured.

9.3.2 Width and position of the splicing tape

The width of the splicing tape and its position across the width of the leader, trailer and magnetic tapes shall be such that the bottom edge of the splicing tape shall be not more than 0,6 mm from the bottom edges of the other tapes, and the top edge of the splicing tape shall be not more than 0,6 mm from their top edges. Neither edge of the splicing tape shall extend beyond the edges of the leader, trailer and magnetic tapes.

© ISO/IEC 2000 – All rights reserved
Copyright International Organization for Standardization
Provided by IHS under license with ISO
No reproduction or networking permitted without license from IHS
Not for Resale

9.4 Discontinuities

Between PBOT and PEOT there shall be no discontinuities in the magnetic tape such as those produced by tape splicing or perforations.

9.5 Tape thickness

9.5.1 Thickness of the magnetic tape

The thickness of the magnetic tape at any point shall be :

For Type A : In the range 6,5 µm to 7,3 µm.
For Type B : In the range 5,0 µm to 5,5 µm.

9.5.2 Thickness of the leader and trailer tapes

The thickness of the leader and trailer tapes at any point shall be in the range 9 µm to 17 µm.

9.5.3 Thickness of the splicing tape

The thickness of the splicing tape at any point shall be 27 µm max.

9.6 Longitudinal curvature

The radius of curvature of the edge of the tape shall be 33 m min.

Procedure

Allow a 1,0 m length of tape to unroll and assume its natural curvature on a flat smooth surface. Measure the deviation from a 1,0 m chord. The deviation shall not be greater than 3,8 mm. This deviation corresponds to the minimum radius of curvature of 33 m if measured over an arc of a circle.

9.7 Cupping

The departure across the width of tape from a flat surface shall be 0,7 mm max.

Procedure

a) Cut a 150 mm ± 10 mm length of tape.

b) Condition the tape for a minimum of 3 h in the test environment by hanging it so that the coated surface is freely exposed to the test environment.

c) Lay the tape across two cylindrical guides that are placed horizontally with the centres 35 mm apart.

d) Attach a 0,3 g mass to each end of the tape.

e) Measure the distance between the plane established by the edges of the tape and the maximum deviation from the plane.

9.8 Coating adhesion

The force required to peel any part of the coating from the tape base material shall be 0,1 N min.

Procedure

a) Take a test piece of the tape approximately 380 mm long and scribe a line through the coating across the width of the tape 125 mm from one end.

b) Using a double-sided pressure sensitive tape, attach the test piece to a smooth metal plate, with the coated surface facing the plate, as shown in figure 27.

c) Fold the test piece over 180° adjacent to, and parallel with the scribed line. Attach the metal plate and the free end of the test piece to the jaws of a universal testing machine such that when the jaws are separated the tape is peeled. Set the jaw separation rate to 254 mm/min.

d) Note the force at which any part of the coating first separates from the base material. If this is less than 0,1 N, the tape has failed the test. If the test piece peels away from the double-sided pressure sensitive tape before the force exceeds 0,1 N, an alternative type of double-sided pressure tape shall be used.

If the back surface of the tape is coated, repeat the procedure for the back coating.

© ISO/IEC 2000 – All rights reserved

Copyright International Organization for Standardization
Provided by IHS under license with ISO
No reproduction or networking permitted without license from IHS
Not for Resale

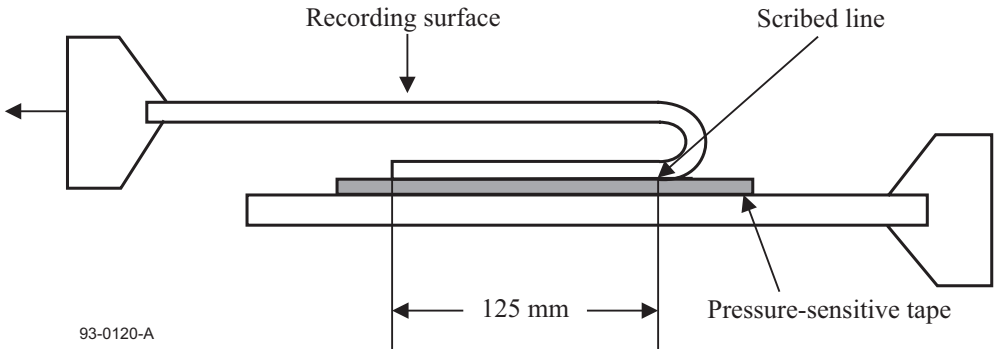

Figure 27 - Measurement of the coating adhesion

9.9 Layer-to-layer adhesion

There shall be no tendency for the test piece to stick or for the coating to peel.

Procedure

a) Attach one end of a test piece of magnetic tape of 1 m length to the surface of a glass tube of 36 mm in diameter.

b) Wind the tape onto the tube at a tension of 1,1 N.

c) Store the wound test piece in a temperature of 45 °C ± 3 °C and a relative humidity of 80 % for 4 h.

d) Store for a further 24 h in the testing environment.

e) Apply a force of 0,1 N to the free end of the test piece and allow it to unwind slowly.

9.10 Tensile strength

Measurements shall be made in accordance with ISO 527-3. The length of the test piece shall be 200 mm. The length of the leader tape test piece shall be 50 mm. The length of the trailer tape test piece shall be 50 mm. The rate of elongation for all tensile tests shall be 100 mm/min.

9.10.1 Breaking strength

The breaking strength of the tape shall be 8 N min.

Procedure

Load the test piece until the breaking point is reached. The force required to reach that point is the breaking strength.

9.10.2 Yield strength

The yield strength is the force required to produce a 5 % elongation of the tape.

The yield strength shall be 4 N min.

9.11 Residual elongation

The residual elongation, expressed as a percentage of the original length, shall be less than 0,04 %.

Procedure

a) Measure the initial length of a test piece of approximately 1 m with a maximum applied force of 0,20 N.

b) Apply an additional force per total cross-sectional area of 20,5 N/mm^2 for a period of 10 minutes.

c) Remove the additional force and measure the length after 10 minutes.

9.12 Electrical resistance of the recording surface

The electrical resistance of any square area of the recording surface shall be 10^3 Ω max.

Procedure

a) Condition a test piece of tape in the test environment for 24 h.

b) Position the test piece over two 24-carat gold-plated, semicircular electrodes having a radius r = 10 mm and a finish of at least N4, so that the recording surface is in contact with each electrode. These electrodes shall be placed parallel to the ground and parallel to each other at a distance d = 8 mm between their centres (see figure 28).

--`,,```,,,,````-`-`,,`,,`,`,,`---
© ISO/IEC 2000 – All rights reserved
Copyright International Organization for Standardization
Provided by IHS under license with ISO
No reproduction or networking permitted without license from IHS
Not for Resale

c) Apply the force necessary to produce a tension of 5 N/mm^2 to each end of the test piece.

d) Apply a d.c. voltage of 7 V ± 1 V across the electrodes and measure the resulting current flow. From this value, determine the electrical resistance.

Repeat for a total of five positions along the test piece and average the five resistance readings.

When mounting the test piece ensure that no conducting paths exist between the electrodes except that through the coating under test.

NOTE - Particular attention should be given to keeping the surfaces clean.

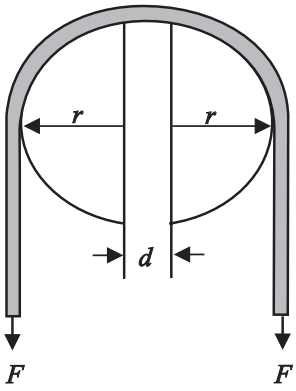

Figure 28 - Measurement of electrical resistance

9.13 Tape winding

The magnetic surface of the tape shall face outward from the cartridge and reels.

9.14 Light transmittance of the tape

The light transmittance of the magnetic tape shall be 5 % max.

The light transmittance of the leader and trailer tapes shall be 60 % min.

The method for measuring light transmittance is given in annex A.

10 Magnetic recording characteristics

The magnetic recording characteristics shall be defined by the testing requirements given below.

When performing these tests, the output or resultant signal shall be measured on a read-while-write pass for both a tape calibrated to the Master Standard Reference Tape and the tape under test, on the same equipment.

The following conditions shall apply to the testing of all magnetic recording characteristics, unless otherwise stated.

tape condition	: a.c. erased to a level of less than 0,1 % of the Average Signal Amplitude at 2 857,1 ftpmm.
diameter of the scanner	: 40,00 $^{+\ 0,01\ mm}_{-\ 0,00\ mm}$
rotation speed of the scanner	: 4 800,0 rpm ± 0,5 rpm
tape speed	: 20,63 mm/s ± 0,30 mm/s
test tracks	: Positive azimuth
read gap length	: 0,20 µm ± 0,05 µm
recording current	: Test Recording Current
recorded track width	: 11 µm ± 1 µm
tape tension	: 0,050 N ± 0,005 N measured at the input of the scanner
write gap length	: 0,22 µm ± 0,05 µm

© ISO/IEC 2000 – All rights reserved

Copyright International Organization for Standardization
Provided by IHS under license with ISO
No reproduction or networking permitted without license from IHS
Not for Resale

read head track width	: 13 μm to 15 μm
read head setting during a	: the read head shall cover the whole width of the recorded track read pass
read output level	: taken at the appropriate fundamental frequency

10.1 Typical Field

The Typical Field shall be between 80 % and 112 % of the Recording Field.

Traceability to the Reference Field is provided by the calibration factor supplied with each Secondary Standard Reference Tape.

10.2 Signal Amplitude

The Average Signal Amplitude at the physical recording density of 3 809,5 ftpmm shall be between 90 % and 140 % of that for the Master Standard Reference Tape.

The Average Signal Amplitude at the physical recording density of 1 428,6 ftpmm shall be between 90 % and 130 % of that for the Master Standard Reference Tape.

Traceability to the Average Signal Amplitude of the Master Standard Reference Tape is provided by the calibration factors supplied with each Secondary Standard Reference Tape.

10.3 Resolution

The ratio of the Average Signal Amplitude at the physical recording density of 3 809,5 ftpmm to that at the physical recording density of 1 428,6 ftpmm shall be between 85 % and 120 % of the same ratio for the Master Standard Reference Tape.

Traceability to the resolution for the Master Standard Reference Tape is provided by the calibration factors supplied with each Secondary Standard Reference Tape.

10.4 Overwrite

Overwrite is the ratio of the Average Signal amplitude of the residual of a low density recording after overwriting at a higher density to the Average Signal Amplitude of the original low density recording.

Traceability to the overwrite ratio for the Master Standard Reference Tape is provided by the calibration factors supplied with each Secondary Standard Reference Tape.

Procedure

a.c. erase the tape. Record at the physical density of 1 142,9 ftpmm and measure the Average Signal Amplitude. Overwrite at the physical recording density of 5 714,3 ftpmm and measure the Average Signal Amplitude of the residual 1 142,9 ftpmm signal. Repeat for the Secondary Standard Reference Tape.

Requirement

$$\text{The ratio} = \frac{\text{Residual Average Signal Amplitude at 1 142,9 ftpmm after overwriting}}{\text{Average Signal Amplitude of the original recording at 1 142,9 ftpmm}}$$

shall be less than 120 % of the same ratio for the Master Standard Reference Tape.

10.5 Ease of erasure

When a tape has been recorded at 1 142,9 ftpmm with the Test Recording Current and then passed through a longitudinal steady erasing field of 320 000 A/m, any remaining signal shall not exceed 2 % of the Standard Reference Amplitude for that density. The erasing field shall be reasonably uniform, for example, the field in the middle of a solenoid. This measurement shall be made with a band pass filter passing at least the first three harmonics.

10.6 Tape quality

10.6.1 Missing pulses

A missing pulse is a loss of read signal amplitude. A missing pulse exists when the base-to-peak read signal is 40 %, or less, of half the Average Signal Amplitude for the recording density of 1 428,6 ftpmm on the same tape.

© ISO/IEC 2000 – All rights reserved
Copyright International Organization for Standardization
Provided by IHS under license with ISO
No reproduction or networking permitted without license from IHS
Not for Resale

10.6.2 Missing pulse zone

A missing pulse zone commences with a missing pulse and ends when a length of 1 mm of track has been measured. If a missing pulse zone continues for a distance exceeding 1 mm, a new missing pulse zone commences.

A missing pulse zone does not continue from one track to the next.

The missing pulse zone rate shall be less than 1 in 5 x 10^6 flux transitions and applies to both positive and negative azimuth tracks.

10.7 Signal-to-Noise Ratio (SNR) characteristic

The Signal-to-Noise Ratio is the average rms read signal amplitude divided by the average integrated rms noise amplitude, and expressed in decibels.

$$SNR = 20 \log \frac{\text{Average rms read signal amplitude}}{\text{Average integrated rms noise amplitude}} \text{ dB}$$

Requirement

The SNR for the tape under test (SNR_{tape}) shall be better than -2 dB relative to the SNR for the Master Standard Reference Tape (SNR_{MSRT}) when measured according to the procedure defined in annex B.

Traceability to the SNR_{MSRT} is provided by the calibration factor supplied with each Secondary Standard Reference Tape.

Section 4 - Requirements for an interchanged tape

11 Format

11.1 General

The smallest collection of data supported by the format is a record. A record is the smallest distinct set of data bytes supplied, e.g. from a host, for processing and recording by a tape drive system, and the smallest distinct set of data to be read from tape, reprocessed and made available, e.g. to a host, by a tape drive system. Two types of record are supported, namely Processed Records and Unprocessed Records.

A recorded tape shall contain Unprocessed Records or Processed Records or both. It may also contain Separator Marks. Both Processed Records and Unprocessed Records are stored on tape as Entities. Separator Marks may be used by the host to indicate the logical separation(s) of the data within a structuring scheme.

Entities and Separator Marks are collected into groups. An index within each group describes that group's contents. A series of transformations, namely randomizing, interleaving, blocking, the generation and inclusion of two Reed-Solomon error correcting codes, and the translation of bytes to Channel bits, is applied to each group prior to recording. A third Reed-Solomon error correcting code may be applied to the group; in this case, the resulting bytes are transformed and recorded in the frames that follow the group on the tape.

Each group is recorded on a group of tracks. The part of each track in which the user data, Separator Marks and associated information are recorded is called the Main Data Zone of the track. Additional information about the contents of the group, the location of the track(s) and the contents of the track(s) is recorded in the Headers of the Recorded Data Blocks in the ID Area of the Main Data Zone.

In the following description all operations on the data received from the host computer, including the use of error detecting and correcting codes, but excluding processing, are described. Then the method of recording on the tape and the tape layout itself will be described. However, because of the inherent characteristics of this format, where required, advance references to the tape layout will also be made in the course of the description of the operations on the data.

11.2 Basic Groups

The data to be recorded shall be grouped in Basic Groups of 801 792 bytes. Each Basic Group shall be identified by a running number allocated consecutively starting with 0. In each Basic Group the bytes are identified by a running number from 1 to 801 792.

The structure of Basic Group No. 0 is not specified by this International Standard. The data for this group is generated by the tape system. It is recorded as the Vendor Group, (see annex K).

© ISO/IEC 2000 – All rights reserved

Copyright International Organization for Standardization
Provided by IHS under license with ISO
No reproduction or networking permitted without license from IHS
Not for Resale

Data and Separator Marks received from the host computer shall be grouped in Basic Groups, following Basic Group No. 0, starting with Basic Group No. 1. These Basic Groups shall be structured as follows.

NOTE - In this International Standard, there are two types of Separator Marks which are referred to as Separator 1 and Separator 2. Some other standards, e.g. those which define an interface between a tape drive and a host computer, use the terms "file mark" and "set mark" to denote Separator Marks. It is recommended that Separator 1 be equated to file mark and Separator 2 be equated to set mark.

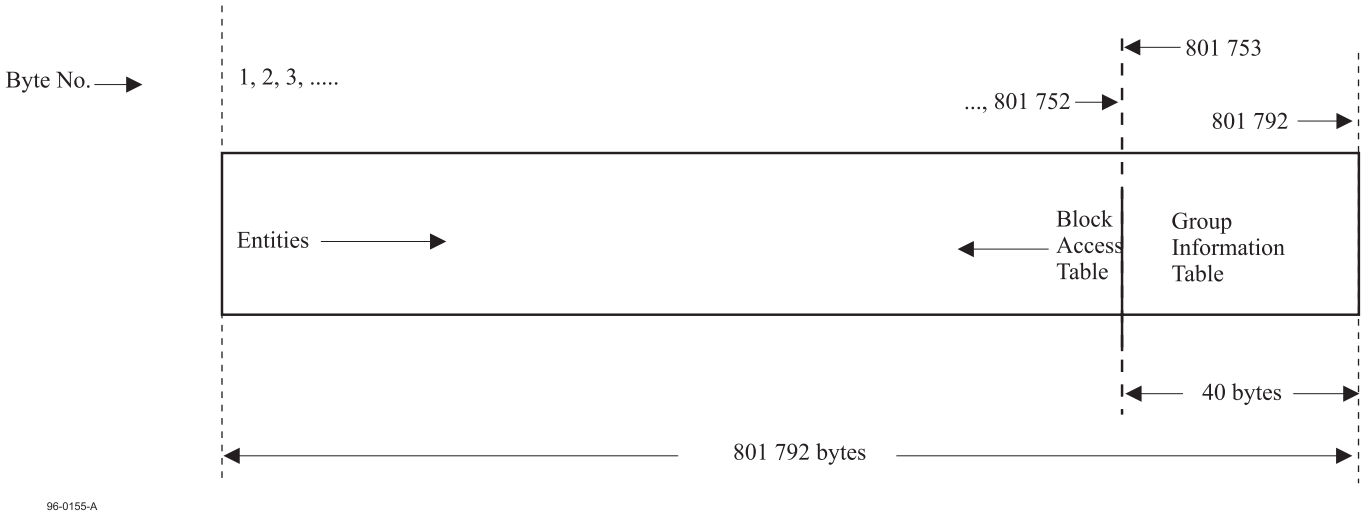

Figure 29 - Structure of a Basic Group

Data constituting Entities shall progress into the Basic Group from left to right (as seen in figure 29). At the same time a part of the Basic Group, called the Block Access Table (BAT), shall progress from right to left. The Group Information Table (GIT) shall occupy the last 40 bytes of the Basic Group.

11.2.1 Entity

11.2.1.1 Content

An Entity comprises an Entity Header and a sequence of consecutive Records. The Entity Header shall be 8 bytes in length. It shall precede the first or single Record of the Entity.

All Processed Records in an Entity shall be the result of applying the same processing algorithm to Unprocessed Records of equal length. All Unprocessed Records in an Entity shall be of equal length.

An Entity may span Basic Groups, provided that all of the Entity Header and the first 8 bits of the first or single Record of the Entity are within the same Basic Group.

In the case where an Entity spans Basic Groups, the parts thereof, within each Basic Group, are identified as Start Part of Entity, Middle Part of Entity and Last Part of Entity (See 11.2.3.2, to 11.2.3.4).

An Entity shall not contain a Record that does not contain data for interchange.

11.2.1.2 Entity Header

Byte No. 1 is the first byte in the Entity Header, and Byte No. 8 is the last byte in the Entity Header, i.e. is adjacent to the first or single Record of the Entity. The Entity Header shall have the following layout:

Byte No. 1 — This byte shall be set to 0000 1000, specifying the number of bytes of the Entity Header, viz. 8.

Byte No. 2 — This byte shall be set as follows:

- if the record is an Unprocessed Record, this byte shall be set to the value 1;
- if the record is a Processed Record, this byte shall be set to
  - the value in the range 2 to 254 corresponding to the registered identifier according to ISO/IEC 11576 of the processing algorithm applied to the record,
  - the value 255, if the processing algorithm is not registered.

This byte shall not be set to the value 0.

© ISO/IEC 2000 – All rights reserved
Copyright International Organization for Standardization
Provided by IHS under license with ISO
No reproduction or networking permitted without license from IHS
Not for Resale

Bytes No. 3 to 5	shall specify in binary notation the length in bytes of the Record before processing, if any (see 11.2.1.1, 2nd paragraph). This length shall not equal 0. Byte No. 3 shall be the MSB, Byte No. 5 shall be the LSB.
Bytes No. 6 to 8	shall specify in binary notation the number of Records in the Entity. This number shall not equal 0. Byte No. 6 shall be the MSB, Byte No. 8 the LSB.

11.2.2 Group Information Table

The Group Information Table shall be a 40-byte field, and shall have the layout shown in table 1.

--`,,```,,,,````-`-`,,`,,`,`,,`---

© ISO/IEC 2000 – All rights reserved

Copyright International Organization for Standardization
Provided by IHS under license with ISO
No reproduction or networking permitted without license from IHS
Not for Resale

Table 1 - Group Information Table

Byte Positions	Length in bytes	Name of the field
801 753	1	Set to all ZEROs
801 754 to 801 756	3	Basic Group Number
801 757 to 801 760	4	Record Count
801 761 to 801 764	4	Separator 1 Count
801 765 to 801 768	4	Separator 2 Count
801 769	1	Set to all ZEROs
801 770 to 801 772	3	Basic Group Number of the Previous Record
801 773	1	Set to all ZEROs
801 774 to 801 776	3	Basic Group Number of the Previous Separator 1
801 777	1	Set to all ZEROs
801 778 to 801 780	3	Basic Group Number of the Previous Separator 2
801 781 801 782	2	Block Access Table Count Least significant two bytes
801 783 801 784	2	Count of Records in the Current Basic Group. Least significant two bytes
801 785 801 786	2	Count of Separators 1 in the Current Basic Group. Least significant two bytes
801 787 801 788	2	Count of Separators 2 in the Current Basic Group. Least significant two bytes
801 789	1	MSB of the Block Access Table Count
801 790	1	MSB of the Count of Records in the current Basic Group
801 791	1	MSB of the Count of Separators 1 in the current Basic Group
801 792	1	MSB of the Count of Separators 2 in the current Basic Group

Within each field of table 1 the most-significant byte shall be in the lowest-numbered byte position and the least-significant byte shall be in the highest-numbered byte position. However, the last four 1-byte entries contain the most-significant byte of the last four 2-bytes entries, respectively.

© ISO/IEC 2000 – All rights reserved
Copyright International Organization for Standardization
Provided by IHS under license with ISO
No reproduction or networking permitted without license from IHS
Not for Resale

11.2.2.1 Group Number field

This field shall be a 3-byte field. It shall specify in binary notation the running number of the current Basic Group.

11.2.2.2 Record Count field

This field shall be a 4-byte field. It shall specify in binary notation the sum of the values in the Count of Records field in the current Basic Group fields of the GITs of all Basic Groups since LBOT, up to and including the current Basic Group. Separator Marks shall be counted as records.

11.2.2.3 Separator 1 Count field

This field shall be a 4-byte field. It shall specify in binary notation the number of Separators 1 written since the LBOT including those in the current Basic Group.

11.2.2.4 Separator 2 Count field

This field shall be a 4-byte field. It shall specify in binary notation the number of Separators 2 written since the LBOT including those in the current Basic Group.

11.2.2.5 Group Number of the Previous Record field

This field shall be a 3-byte field. It shall specify in binary notation the running number of the highest-numbered previous Basic Group in which a Separator Mark or the beginning of an Unprocessed Record occurred. If no such Basic Group exists, this field shall be set to all ZEROs.

11.2.2.6 Group Number of the Previous Separator 1 field

This field shall be a 3-byte field. It shall specify in binary notation the running number of the previous highest-numbered Basic Group which contains the last written Separator 1. If no such Basic Group exists, this field shall be set to all ZEROs.

11.2.2.7 Group Number of the Previous Separator 2 field

This field shall be a 3-byte field. It shall specify in binary notation the running number of the previous highest-numbered Basic Group which contains the last written Separator 2. If no such Basic Group exists, this field shall be set to all ZEROs.

11.2.2.8 Block Access Table Count field

This field shall be a 3-byte field. It shall specify in binary notation the number of entries in the Block Access Table. This is not the same as the number of Records or Parts of Records in the Basic Group.

11.2.2.9 Count of Records in the Current Basic Group field

This field shall be a 3-byte field. It shall specify in binary notation the sum of the following:

— the number of Separator Mark entries in the BAT of the current Basic Group

— the number of Records in the Entities of the current Basic Group

— the sum of the numbers in Bytes No. 6 to No. 8 of the Entity Headers of all Entities for which there is an Entire Entity entry (See 11.2.3.1) in the BAT of the current Basic Group,

— the value which is 1 less than the number in Bytes No. 6 to No. 8 of the Entity Header of the Entity for which there is a Start Part of Entity entry (See 11.2.3.2) in the BAT of the current Basic Group, if such an entry exists,

— the number of Total Count of Entity entries in the BAT of the current Basic Group.

11.2.2.10 Count of Separators 1 field

This field shall be a 3-byte field. It shall specify in binary notation the number of Separators 1 written in the current Basic Group.

11.2.2.11 Count of Separators 2 field

This field shall be a 3-byte field. It shall specify in binary notation the number of Separators 2 written in the current Basic Group.

11.2.3 Block Access Table (BAT)

The BAT shall contain one or more entries for each Entity and each Separator Mark of the Basic Group. Entities not entirely contained in the Basic Group shall also be identified by one or more entries. The first entry shall be written immediately before the Group Information Table, in byte positions 801 749 to 801 752. Each entry shall be a 4-byte field, structured as shown in figure 30. The 1st byte shall be in the lowest-numbered byte position and the 4th byte shall be in the highest-numbered byte position.

© ISO/IEC 2000 – All rights reserved

Copyright International Organization for Standardization
Provided by IHS under license with ISO
No reproduction or networking permitted without license from IHS
Not for Resale

Entry of the Block Access Table			
Flag Byte	Count		
1st byte	2nd byte (MSB)	3rd byte	4th byte (LSB)

Figure 30 - Block Access Table

Depending on the setting of the Flag Byte, the 3-byte Count field shall express in binary notation a number not greater than 2^{24}-1 as specified below. This International Standard specifies the 14 settings of the Flag Byte listed in table 2. Other settings are prohibited by this International Standard.

The most significant bit of the Flag Byte (see table 2), the After Early Warning Point bit, is indicated as indifferent as far as the meaning of the entry is concerned. It shall be set as follows:

— before EWP it shall be set to ZERO;

— after EWP it shall be set to ONE in the current entry and all following BAT entries of the current Basic Group and in all BAT entries of all following Basic Groups.

Table 2 - Settings of the Flag Byte

	Setting	Entry
Before EWP	0000 0001	Entire Entity
	0000 0010	Start Part of Entity
	0000 0011	Middle Part of Entity
	0000 0100	Last Part of Entity
	0000 0101	Total Count of Entity
	0000 0110	Separator Mark Entity
	0000 0111	Skip
After EWP	1000 0001	Entire Entity
	1000 0010	Start Part of Entity
	1000 0011	Middle Part of Entity
	1000 0100	Last Part of Entity
	1000 0101	Total Count of Entity
	1000 0110	Separator Mark Entity
	1000 0111	Skip

11.2.3.1 Entire Entity

This entry relates to an Entity and shall specify that the Entity starts and ends in the current Basic Group. The Count field shall specify the number of bytes in the Entity.

11.2.3.2 Start Part of Entity

This entry relates to an Entity and shall specify that the Entity starts in the current Basic Group and ends in a subsequent Basic Group. The Count field shall specify the number of bytes in the Start Part of Entity recorded in the current Basic Group.

11.2.3.3 Middle Part of Entity

This entry relates to an Entity and shall specify that the Entity starts in a previous Basic Group and ends in a subsequent Basic Group. The Count field shall specify the number of bytes in the partial Entity which is in the current Basic Group.

11.2.3.4 Last Part of Entity

This entry relates to an Entity and shall specify that the Entity starts in a previous Basic Group and ends in the current Basic Group. The Count field shall specify the number of bytes in the partial Entity which is in the current Basic Group. This entry shall be immediately followed in the BAT of the current Basic Group by an entry for Total Count of Entity.

--`,,```,,,,````-`-`,,`,,`,`,,`---

© ISO/IEC 2000 – All rights reserved
Copyright International Organization for Standardization
Provided by IHS under license with ISO
No reproduction or networking permitted without license from IHS
Not for Resale

11.2.3.5 Total Count of Entity

Total Count of Entity shall follow the Last Part of Entity entry. This entry relates to the same Entity as that of the immediately preceding entry for Last Part of Entity. The Count field shall specify the total number of bytes in the entire Entity.

11.2.3.6 Separator Mark Entity

This entry shall specify that the Entity is a Separator Mark record. The Count field shall specify the number 0 if the Entity is a Separator 1 record and the number 1 if the Entity is a Separator 2 record.

11.2.3.7 Skip

There shall be a Skip entry as the last entry of the Block Access Table of each Basic Group. This entry indicates that the last byte of user data in the current Basic Group has been reached. The Count field shall specify the remaining number of bytes in the Basic Group. Thus the minimum number that can be specified by the Count field shall be the total number of bytes of the Group Information Table and of the Block Access Table.

The Count Value in the Block Access Table for Skip entries shall be a multiple of 4.

11.2.3.8 Count fields

The sum of the numbers specified in the Count fields of those of the types of entry in the following list which are present in the Block Access Table shall be 801 792. The list comprises: Skip, Entire Entity, Start Part of Entity, Middle Part of Entity and Last Part of Entity.

11.2.3.9 Valid sequences of entries of the Block Access Table

The valid sequences of entries are specified by table 3, in which states and actions are described within rectangles, and the entries (as designated by the setting of the Flag Byte) are described within ellipses.

Table 3 shows only those entries which are valid as the next entry to be encountered in each state or after each action. All other entries are invalid.

© ISO/IEC 2000 – All rights reserved

Copyright International Organization for Standardization
Provided by IHS under license with ISO
No reproduction or networking permitted without license from IHS
Not for Resale

Table 3 - Valid sequences of entries in the Block Access Table

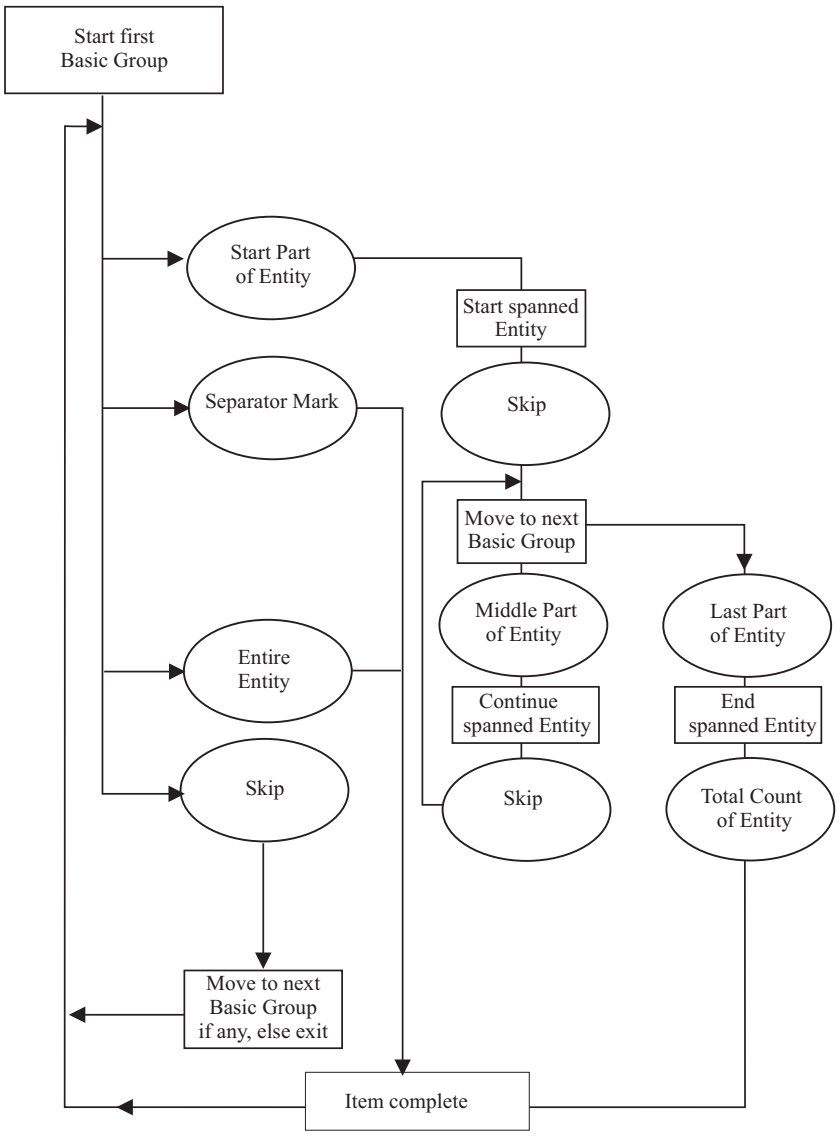

11.3 Sub-Groups

11.3.1 G1 Sub-Group

When a Basic Group has been completed, it shall be split into 18 G1 Sub-Groups, numbered 1 to 18, of 44 544 bytes numbered from 1 to 44 544, starting with the first 44 544 bytes in the first G1 Sub-Group, followed by the next 44 544 bytes in the second G1 Sub-Group, and so on.

© ISO/IEC 2000 – All rights reserved
Copyright International Organization for Standardization
Provided by IHS under license with ISO
No reproduction or networking permitted without license from IHS
Not for Resale

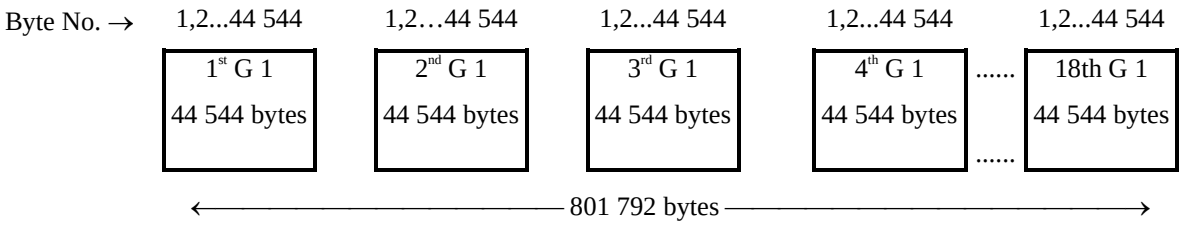

Figure 31 - G1 Sub-Groups

11.3.2 G2 Sub-Group - Randomizing

The odd numbered bytes of each G1 Sub-Group shall be submitted to an Exclusive OR operation together with a sequence of bits which is the output of the shift register shown in figure 32. The even numbered bytes of each G1 Sub-Group shall be submitted to an Exclusive OR operation together with a sequence of bits which is the output of the shift register shown in figure 32.

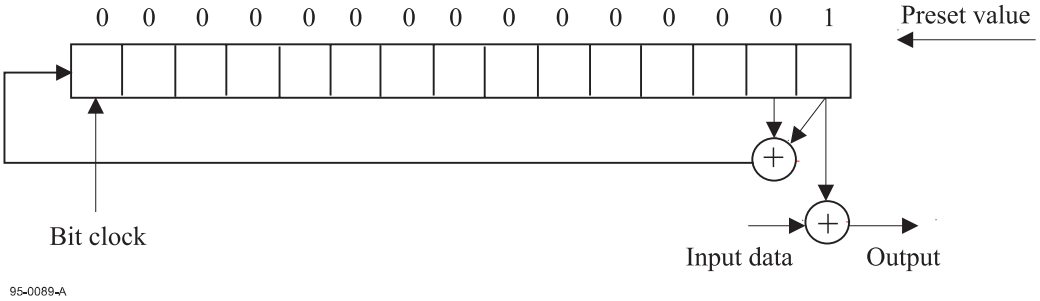

Figure 32 - Shift register

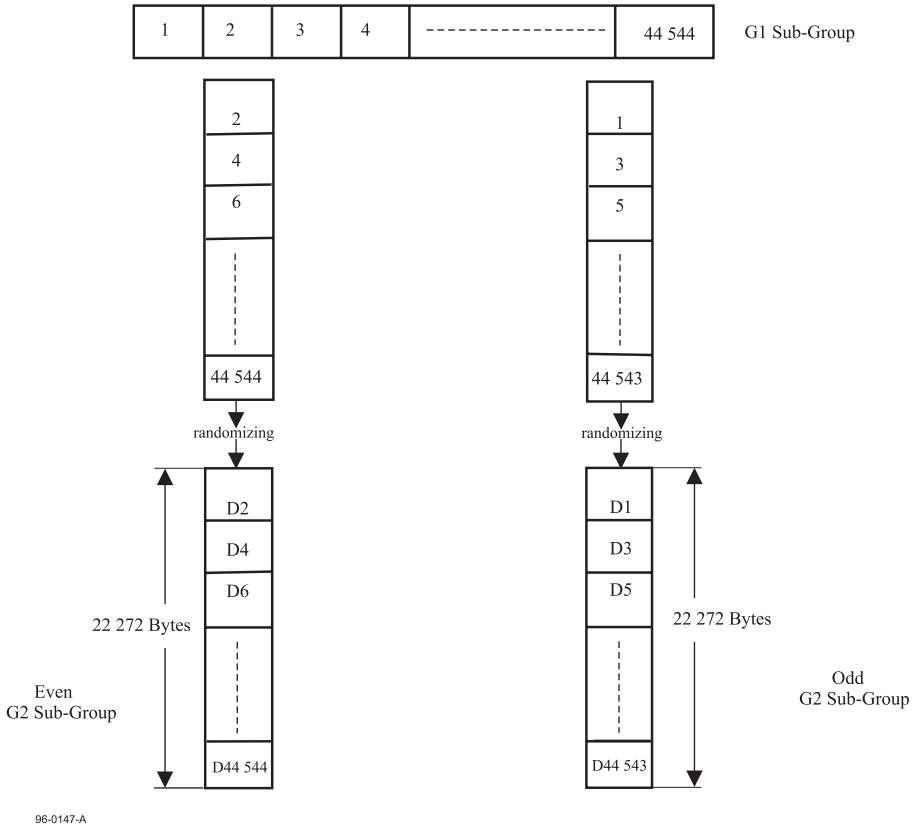

Figure 33 - G2 Sub-Groups

© ISO/IEC 2000 – All rights reserved

Copyright International Organization for Standardization
Provided by IHS under license with ISO
No reproduction or networking permitted without license from IHS
Not for Resale

For each byte the least significant bit, i.e. bit b1 shall be input first. The logical operators are Exclusive ORs.

The G1 Sub-Group is thereby transformed into two G2 Sub-Groups: the Even G2 Sub-Group and the Odd G2 Sub-Group, each comprising 22 272 bytes.

For n = 1, 2, ..., 22 272, the bytes D_n of the G1 Sub-Group shall be allocated and numbered as follows:

— the Even G2 Sub-Group comprises bytes D_{2n}

— the Odd G2 Sub-Group comprises bytes $D_{(2n-1)}$

In each G2 Sub-Group, the sequence of the bytes is the same as in the G1 Sub-Group.

11.3.3 G3 Sub-Group

The bytes of each G2 Sub-Group shall be placed as follows into a G3 Sub-group. The G3 Sub-group shall be an array of 224 cells each containing 128 bytes. The 22 272 data bytes of each G2 Sub-Group shall be placed in the 192 cells from cell No. 17 to cell No. 208. Each cell shall contain two sets of data bytes of 64 bytes and 52 bytes, respectively, followed by 12 bytes of C1 ECC bytes computed over the 116 data bytes of the cell. The C1 bytes shall be computed as specified in annex G.

Once the 192 cells are all filled as indicated, C2 ECC bytes shall be computed over these 192 cells and the corresponding C2 bytes are entered in cells No. 1 to 16 and cells No. 209 to 224. The C2 bytes shall be computed as specified in annex G.

This operation shall be performed for the Even G2 Sub-Group and for the Odd G2 Sub-Group.

Each 64-byte set contained in each cell constitutes a Block. These Blocks shall be numbered consecutively by Block Numbers in the range 0 to 447.

--`,,```,,,,````-`-`,,`,,`,`,,`---

© ISO/IEC 2000 – All rights reserved
Copyright International Organization for Standardization
Provided by IHS under license with ISO
No reproduction or networking permitted without license from IHS
Not for Resale

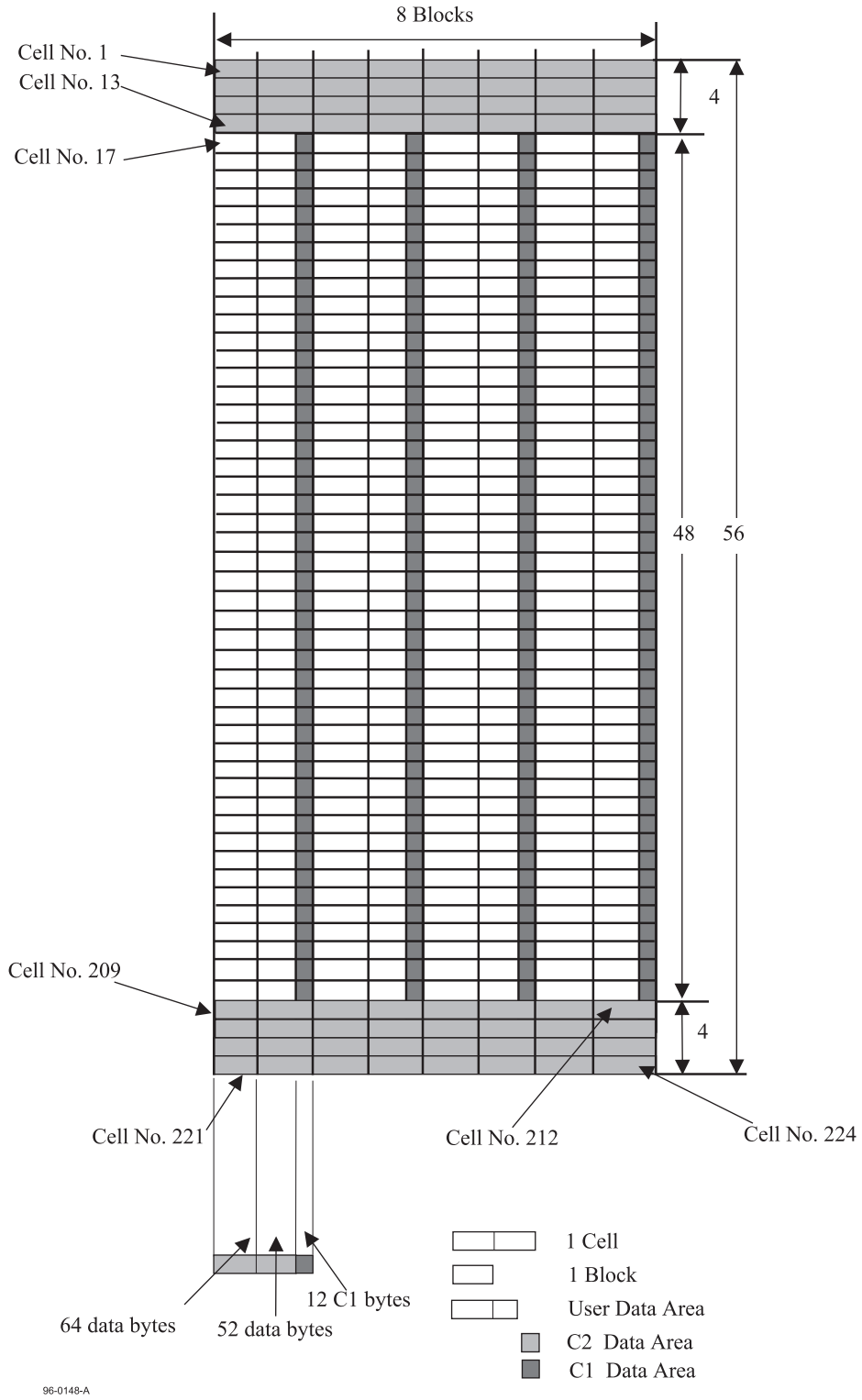

Figure 34 - G3 Sub - Group

11.4 Data Block

Each 64-byte of a Block shall be transformed into a 72-byte Data Block by the addition of a Header of 8 bytes preceding the 64 bytes of the block. The structure of the Header shall be as shown in figure 35.

© ISO/IEC 2000 – All rights reserved

Copyright International Organization for Standardization
Provided by IHS under license with ISO
No reproduction or networking permitted without license from IHS
Not for Resale

	b8	b7	b6	b5	b4	b3	b2	b1
ID 1	Data Block Number (DBN)							
ID 2	DBN	ID Information						
ID 3	ID Information							
ID 4	ID Information							
ID 5	ID Information							
ID 6	ID Information							
ID 7	ID Parity							
ID 8	ID Parity							

Figure 35 - Structure of the Data Block Header

These ID bytes shall contain the following ID Information.

— Data Block Number
— Tape Length and Thickness ID
— Logical Frame ID
— Partition ID
— Area ID
— Position
— Group Count
— Separator 1 Count
— Separator 2 Count
— Record Count
— Absolute Frame Number
— ID Parity

This ID Information shall be recorded as specified in 11.4.2.

11.4.1 ID information

11.4.1.1 Data Block Number (DBN)

This number is a 9-bit number. It is represented by the 8 bits of byte ID1 and by bit b8 of byte ID2 as the msb of this number. The value of this number shall be in the range 0 to 477.

11.4.1.2 Tape Length and Thickness ID

This 8-bit field shall be set as follows.

Bits 8 and 7 shall be set to: 00 to indicate a tape thickness of 6,5 µm to 7,3 µm
01 to indicate a tape thickness of 5,0 µm to 5,5 µm

Bits 6 to 1 shall express in binary notation an integer *n* in the range 1 to 46, such that 5*n* indicates the length of the tape in metres.

11.4.1.3 Logical Frame ID (LFID)

This 8-bit field shall be as follows.

Bit 8 This bit shall be set to ONE, if the Frame is the last of the Basic Group, else it shall be set to ZERO.

Bit 7 This bit shall be set to ONE if the Frame is an ECC 3 Frame (See 16.5.3), else it shall be set to ZERO.

Bits 6 to 1 These bits shall be set to all ZEROs, if the Frame is an Amble Frame, else they shall express in binary notation the ordinal number *n* of the Data Frame, for *n*=1 to 20.

11.4.1.4 Partition ID

This 8-bit field shall specify in binary notation the ordinal number of the partition in the range 0 to 255.

© ISO/IEC 2000 – All rights reserved
Copyright International Organization for Standardization
Provided by IHS under license with ISO
No reproduction or networking permitted without license from IHS
Not for Resale

11.4.1.5 Area ID

This 4-bit field shall specify the current area on the tape and thereby indicate the type of the current Frame. Other settings than those specified in figure 36 are prohibited by this International Standard.

Bit Positions				Definition
7	6	5	4	
0	0	0	0	Device Area
0	0	0	1	Reference Area
0	0	1	0	System Area
0	1	0	0	Data Area
0	1	0	1	EOD Area
0	1	1	1	Optional Device Area

Figure 36 - Area ID

11.4.1.6 Repeat

This 3-bit field shall specify the number of instances of a Basic Group.

000 shall indicate that there is only one instance of the Basic Group.
001 shall indicate that there are 2 instances of the Basic Group.
010 shall indicate that there are 3 instances of the Basic Group.
011 shall indicate that there are 4 instances of the Basic Group.
100 shall indicate that there are 5 instances of the Basic Group.
101 shall indicate that there are 6 instances of the Basic Group.
110 shall indicate that there are 7 instances of the Basic Group.
111 shall indicate that there are 8 instances of the Basic Group.

11.4.1.7 Position

This 3-bit field shall specify the ordinal position of the current recorded instance of this Basic Group in a sequence of contiguous recorded instances of this Basic Group.

Bit Positions			Definition
3	2	1	
0	0	0	The first instance of the Basic Group.
0	0	1	The 2nd instance of the Basic Group.
0	1	0	The 3rd instance of the Basic Group.
0	1	1	The 4th instance of the Basic Group.
1	0	0	The 5th instance of the Basic Group.
1	0	1	The 6th instance of the Basic Group.
1	1	0	The 7th instance of the Basic Group.
1	1	1	The 8th instance of the Basic Group.

Figure 37 - Position field

11.4.1.8 Group Count

This 24-bit field shall specify the number of Basic Groups that have been written following the Vendor Group of the current partition, starting with 1 and including the current Basic Group. The Vendor Group shall have a Basic Group count of 0. When Repeat is employed, the Group Count shall remain constant for each instance of a Basic Group.

11.4.1.9 Separator 1 Count

This 32-bit field shall specify the number of Separators 1 written since the beginning of the partition up to and including the current Basic Group. The first Separator 1 in the partition shall have a count of 1.

© ISO/IEC 2000 – All rights reserved

Copyright International Organization for Standardization
Provided by IHS under license with ISO
No reproduction or networking permitted without license from IHS
Not for Resale

11.4.1.10 Separator 2 Count

This 32-bit field shall specify the number of Separators 2 that have been written since the beginning of the partition, up to and including the current Basic Group. The first Separator 2 in the partition shall have a count of 1.

11.4.1.11 Record Count

This 32-bit field shall specify the number of Records written since the beginning of the partition, including any complete Records in the current Basic Group. This number shall specify the Record Count (See 11.2.2) recorded in the Group Information Table.

11.4.1.12 Absolute Frame Number (AFN)

This 24-bit field shall specify the Absolute Frame Number of the current Frame. The first Frame of the Reference Area shall have AFN 1 Any discontinuous or repeated numbers shall only occur in an Amble Frame sequence (see 17.1), except in Intermediate Frames (see 16.5.5).

11.4.1.13 ID Parity

The ID Parity bytes shall be computed using an extended Reed-Solomon Code.

Calculation in a GF (2^8) shall be defined by:

$$G(x) = x^8 + x^4 + x^3 + x^2 + 1$$

A primitive element α in GF (2^8) is 00000010

The ID parity bytes shall satisfy:

$$Hs \times Vs = 0$$

$$Hs = \begin{bmatrix} 1 & 1 & 1 & 1 & 1 & 1 & 1 & 0 \\ \alpha^5 & \alpha^4 & \alpha^3 & \alpha^2 & \alpha^1 & 1 & 0 & 1 \end{bmatrix}$$

$$Vs = \begin{bmatrix} ID1 \\ ID2 \\ ID3 \\ ID4 \\ ID5 \\ ID6 \\ ID7 \\ ID8 \end{bmatrix}$$

11.4.2 Recording of the ID Information in the Data Block Headers

The 448 Data Blocks of each G3 Sub-Group shall be arranged in 28 sequences of 16 Data Blocks. The ID Information shall be laid out within these 16 Data Blocks as specified in figure 38. The same layout is repeated in each sequence of 16 Data Blocks.

© ISO/IEC 2000 – All rights reserved
Copyright International Organization for Standardization
Provided by IHS under license with ISO
No reproduction or networking permitted without license from IHS
Not for Resale

Data Block 1	ID 1		Data Block Number
	ID 2	bit 8	Data Block Number (msb)
		bit 7 to bit 4	Area ID
		bit 3 to bit 1	Set to ZEROs
	ID 3		Set to ZEROs
	ID 4		Set to ZEROs
	ID 5		Set to ZEROs
	ID 6		Tape Length and Thickness ID
	ID 7		ID Parity
	ID 8		ID Parity
	DATA		64 bytes of Data
Data Block 2	ID 1		Data Block Number
	ID 2	bit 8	Data Block Number (msb)
		bit 7 to bit 4	Area ID
		bit 3 to bit 1	Set to ZEROs
	ID 3		Separator 1 Count (LSB)
	ID 4		Separator 1 Count
	ID 5		Separator 1 Count
	ID 6		Separator 1 Count (MSB)
	ID 7		ID Parity
	ID 8		ID Parity
	DATA		64 bytes of Data
Data Block 3	ID 1		Data Block Number
	ID 2	bit 8	Data Block Number (msb)
		bit 7 to bit 4	Area ID
		bit 3 to bit 1	Set to ZEROs
	ID 3		Separator 2 Count (LSB)
	ID 4		Separator 2 Count
	ID 5		Separator 2 Count
	ID 6		Separator 2 Count (MSB)
	ID 7		ID Parity
	ID 8		ID Parity
	DATA		64 bytes of Data

Figure 38 - Allocation of ID Information (continued)

© ISO/IEC 2000 – All rights reserved

Copyright International Organization for Standardization
Provided by IHS under license with ISO
No reproduction or networking permitted without license from IHS
Not for Resale

Data Block 4	ID 1		Data Block Number
	ID 2	bit 8	Data Block Number (msb)
		bit 7 to bit 4	Area ID
		bit 3 to bit 1	Set to ZEROs
	ID 3		Record Count (LSB)
	ID 4		Record Count
	ID 5		Record Count
	ID 6		Record Count (MSB)
	ID 7		ID Parity
	ID 8		ID Parity
	DATA		64 bytes of Data
Data Block 5	ID 1		Data Block Number
	ID 2	bit 8	Data Block Number (msb)
		bit 7 to bit 4	Area ID
		bit 3 to bit 1	Set to ZEROs
	ID 3		Partition ID
	ID 4		Group Count (LSB)
	ID 5		Group Count
	ID 6		Group Count (MSB)
	ID 7		ID Parity
	ID 8		ID Parity
	DATA		64 bytes of Data
Data Block 6	ID 1		Data Block Number
	ID 2	bit 8	Data Block Number (msb)
		bit 7 to bit 4	Area ID
		bit 3 to bit 1	Repeats
	ID 3		LFID
	ID 4		AFN (LSB)
	ID 5		AFN
	ID 6		AFN (MSB)
	ID 7		ID Parity
	ID 8		ID Parity
	DATA		64 bytes of Data

Figure 38 - Allocation of ID Information (continued)

Copyright International Organization for Standardization
Provided by IHS under license with ISO
No reproduction or networking permitted without license from IHS
Not for Resale
© ISO/IEC 2000 – All rights reserved

Data Block 7	ID 1		Data Block Number
	ID 2	bit 8	Data Block Number (msb)
		bit 7 to bit 4	Area ID
		bit 3 to bit 1	Position
	ID 3		LFID
	ID 4		AFN (LSB)
	ID 5		AFN
	ID 6		AFN (MSB)
	ID 7		ID Parity
	ID 8		ID Parity
	DATA		64 bytes of Data
Data Block 8	ID 1		Data Block Number
	ID 2	bit 8	Data Block Number (msb)
		bit 7 to bit 4	Area ID
		bit 3	Set to ZERO
		bit 2	Set to ZERO
		bit 1	If set to ZERO, ID 3 and ID 4 shall be set to all ZEROs. If set to ONE, ID 3 and ID 4 shall be set as specified below in this Data Block 8.
	ID 3		If bit 1 of ID 2 in this Data Block 8 is set to ONE, this field shall be set to the byte resulting from the Exclusive OR operation performed over the 22 272 bytes of the Even G2 Sub-Group of the Basic Group. If said Bit 1 is set to ZERO, this field shall be set to all ZEROs.
	ID 4		If bit 1 of ID 2 in this Data Block 8 is set to ONE, this field shall be set to the byte resulting from the Exclusive OR operation performed over the 22 272 bytes of the Odd G2 Sub-Group of the Basic Group. If said Bit 1 is set to ZERO, this field shall be set to all ZEROs.
	ID 5		Set to ZERO
	ID 6		Set to ZERO
	ID 7		ID Parity
	ID 8		ID Parity
	DATA		64 bytes of Data

Figure 38 - Allocation of ID Information (continued)

© ISO/IEC 2000 – All rights reserved
Copyright International Organization for Standardization
Provided by IHS under license with ISO
No reproduction or networking permitted without license from IHS
Not for Resale

Data Block 9	ID 1		Data Block Number
	ID 2	bit 8	Data Block Number (msb)
		bit 7 to bit 4	Area ID
		bit 3 to bit 1	Set to ZEROs
	ID 3		Set to ZEROs
	ID 4		Set to ZEROs
	ID 5		Set to ZEROs
	ID 6		Set to ZEROs
	ID 7		ID Parity
	ID 8		ID Parity
	DATA		64 bytes of Data
Data Block 10	ID 1		Data Block Number
	ID 2	bit 8	Data Block Number (msb)
		bit 7 to bit 4	Area ID
		bit 3 to bit 1	Set to ZEROs
	ID 3		Set to ZEROs
	ID 4		Set to ZEROs
	ID 5		Set to ZEROs
	ID 6		Set to ZEROs
	ID 7		ID Parity
	ID 8		ID Parity
	DATA		64 bytes of Data
Data Block 11	ID 1		Data Block Number
	ID 2	bit 8	Data Block Number (msb)
		bit 7 to bit 4	Area ID
		bit 3 to bit 1	Set to ZEROs
	ID 3		Set to ZEROs
	ID 4		Set to ZEROs
	ID 5		Set to ZEROs
	ID 6		Set to ZEROs
	ID 7		ID Parity
	ID 8		ID Parity
	DATA		64 bytes of Data

Figure 38 - Allocation of ID Information (continued)

© ISO/IEC 2000 – All rights reserved
Copyright International Organization for Standardization
Provided by IHS under license with ISO
No reproduction or networking permitted without license from IHS
Not for Resale

Data Block 12	ID 1		Data Block Number
	ID 2	bit 8	Data Block Number (msb)
		bit 7 to bit 4	Area ID
		bit 3 to bit 1	Set to ZEROs
	ID 3		Set to ZEROs
	ID 4		Set to ZEROs
	ID 5		Set to ZEROs
	ID 6		Set to ZEROs
	ID 7		ID Parity
	ID 8		ID Parity
	DATA		64 bytes of Data
Data Block 13	ID 1		Data Block Number
	ID 2	bit 8	Data Block Number (msb)
		bit 7 to bit 4	Area ID
		bit 3 to bit 1	Set to ZEROs
	ID 3		Set to ZEROs
	ID 4		Set to ZEROs
	ID 5		Set to ZEROs
	ID 6		Set to ZEROs
	ID 7		ID Parity
	ID 8		ID Parity
	DATA		64 bytes of Data
Data Block 14	ID 1		Data Block Number
	ID 2	bit 8	Data Block Number (msb)
		bit 7 to bit 4	Area ID
		bit 3 to bit 1	Set to ZEROs
	ID 3		Set to ZEROs
	ID 4		Set to ZEROs
	ID 5		Set to ZEROs
	ID 6		Set to ZEROs
	ID 7		ID Parity
	ID 8		ID Parity
	DATA		64 bytes of Data

Figure 38 - Allocation of ID Information (continued)

© ISO/IEC 2000 – All rights reserved

Copyright International Organization for Standardization
Provided by IHS under license with ISO
No reproduction or networking permitted without license from IHS
Not for Resale

Data Block 15	ID 1		Data Block Number
	ID 2	bit 8	Data Block Number (msb)
		bit 7 to bit 4	Area ID
		bit 3 to bit 1	Set to ZEROs
	ID 3		Set to ZEROs
	ID 4		Set to ZEROs
	ID 5		Set to ZEROs
	ID 6		Set to ZEROs
	ID 7		ID Parity
	ID 8		ID Parity
	DATA		64 bytes of Data
Data Block 16	ID 1		Data Block Number
	ID 2	bit 8	Data Block Number (msb)
		bit 7 to bit 4	Area ID
		bit 3 to bit 1	Set to ZEROs
	ID 3		Set to ZEROs
	ID 4		Set to ZEROs
	ID 5		Set to ZEROs
	ID 6		Set to ZEROs
	ID 7		ID Parity
	ID 8		ID Parity
	DATA		64 bytes of Data

Figure 38 - Allocation of ID Information (concluded)

12 Method of recording

The method of recording shall be

— a ONE is represented by a flux transition at the centre of a bit cell;

— a ZERO is represented by the absence of a flux transition in the bit cell.

12.1 Physical recording density

The nominal maximum physical recording density is 5 714,3 ftpmm. The resulting nominal bit cell length is 0,175 μm. These values are derived from the track length (see 13.7) divided by the number of bits per track.

12.2 Long-term average bit cell length

The long-term average bit cell length for each track shall be measured over 64 Recorded Data Blocks. It shall be within 0,2 % of the nominal bit cell length.

12.3 Short-term average bit cell length

The short-term average bit cell length, referred to a particular bit cell, shall be the average of the preceding 40 bit cells. It shall be within 0,35 % of the long-term average bit cell length for the preceding track of the same azimuth.

12.4 Rate of change

The above defined short-term average bit cell length shall not change at a rate greater than 0,05 % per bit cell.

© ISO/IEC 2000 – All rights reserved
Copyright International Organization for Standardization
Provided by IHS under license with ISO
No reproduction or networking permitted without license from IHS
Not for Resale

12.5 Bit shift

When measured according to annex E ($|A_{1110}| + |A_{0111}|$)/($A_{0100} + A_{0010}$) shall be less than 0,05.

12.6 Read signal amplitude

The Average Signal Amplitude of an interchanged cartridge shall be

— at 1 142,9 ftpmm, 1 428,6 ftpmm, 1 904,8 ftpmm, 2 857,1 ftpmm and 3 809,5 ftpmm : between 80 % and 140 % of the respective nominal recorded levels (see C.1).

12.7 Maximum recorded levels

Recorded signals shall be erasable by overwriting. The Maximum Allowable Recorded Levels specified in C.2 of annex C shall not be exceeded.

13 Track geometry

13.1 Track configuration

The helical track pattern is formed by the relationship between the direction of tape motion and the axis of rotation of a pair of heads, one of which has a positive azimuth angle and the other a negative azimuth angle. The direction of recording is away from the Tape Reference Edge. The track configuration is shown in figure 39.

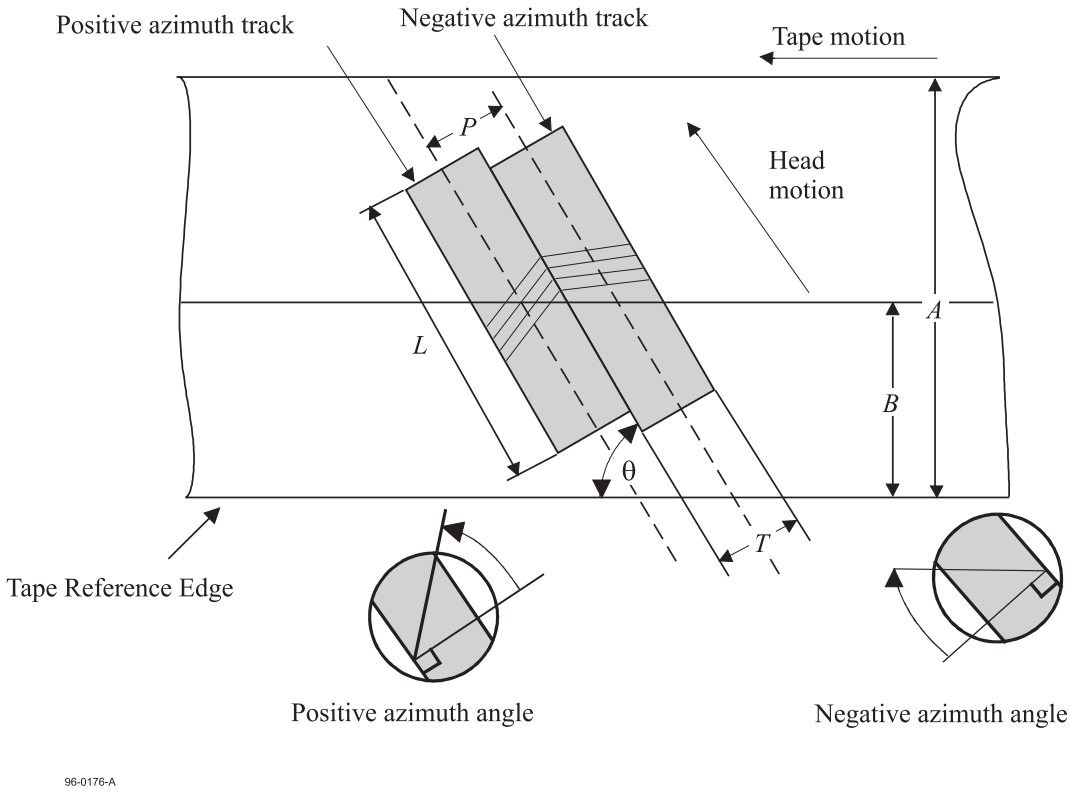

A	: Tape width	*L*	: Track length
B	: Ideal tape centreline	*P*	: Track pitch
θ	: Track angle	*T*	: Track width

Figure 39 - Track configuration (view on the recording surface)

13.2 Average track pitch

The average track pitch, taken over any group of 30 consecutive tracks, shall be 11,00 μm ± 0,20 μm. The track pitch at a non-seamless append point (see 16.5.6.2) shall not be included in this average.

© ISO/IEC 2000 – All rights reserved

Copyright International Organization for Standardization
Provided by IHS under license with ISO
No reproduction or networking permitted without license from IHS
Not for Resale

13.3 Variations of the track pitch

The change of track pitch between successive track pitches shall not exceed 2,0 %, excluding the effect of an appending operation (see 16.5.6).

13.4 Track width

The nominal track width is 11,00 μm.
The measured track width shall be 11,00 μm ± 1,50 μm.
This requirement shall not apply at a non-seamless append point.

13.5 Track angle

The nominal angle of each track with respect to the Tape Reference Edge shall be 4,895 0°.

13.6 Track edge straightness

The leading edge of each track shall be straight when measured according to annex F.

13.7 Track length

The length of each track shall be 60,170 mm ± 0,050 mm.

13.8 Azimuth angles

The positive azimuth angle shall be 25°0'0" ± 0°15’0"
The negative azimuth angle shall be -25°0'0" ± 0°15'0".

14 Recorded patterns

Each 8-bit byte of the Main Data Blocks shall be represented on the tape by a 10-bit pattern. Annex D specifies for each 8-bit byte the 10-bit pattern to be recorded. The bits of the 10-bit pattern are called Channel bits.

14.1 Recorded Data Block

A Recorded Data Block shall consist of 730 Channel bits representing the 72 8-bit bytes of a Main Data Block preceded by a Sync field of 10 Channel bits with one of the following patterns:

a) 0100010001

b) 1100010001

Pattern a) shall be used for Q' = -1, DC = 0, Q = 1; pattern b) for Q' = 1, DC = 0, Q = 1 (see annex D). Either pattern may be used when there is no preceding pattern, and hence no value of Q'. See annex D for the order of recording.

In a track of positive azimuth, the Recorded Data Blocks shall represent the Main Data Blocks formed from the Even G3 Sub-Group. In the track of negative azimuth of the same Frame, the Recorded Data Blocks shall represent the Main Data Blocks formed from the corresponding Odd G3 Sub-Group. Within each track, the Recorded Data Blocks shall be recorded in the sequence of their Block Numbers.

14.2 Margin blocks

These blocks shall have a length of 730 Channel bits consisting of the repeated Channel bit pattern 1100 1100 ... or 0011 0011.

15 Format of a track

15.1 Track structure

Each track shall consists of two Margin Zones, three ATF Zones and two Main Data Zones which are shown in tables 4 and 5. ATF Zones consist of spacer Blocks and ATF Blocks which are different between a positive azimuth track and a negative azimuth track.

© ISO/IEC 2000 – All rights reserved
Copyright International Organization for Standardization
Provided by IHS under license with ISO
No reproduction or networking permitted without license from IHS
Not for Resale

Table 4 : Format of a track (Negative azimuth track)

Zone	Contents	Number of Blocks
Margin Zone 1	Margin Blocks	4
ATF Zone 1	Spacer Blocks	1
	ATF C Blocks	2
	Spacer Blocks	2
Main Data Zone 1	Recorded Data Blocks 1 to 224	224
ATF Zone 2	Spacer Blocks	1
	ATF C Blocks	2
	Spacer Blocks	2
Main Data Zone 2	Recorded Data Blocks 225 to 448	224
ATF Zone 3	Spacer Blocks	1
	ATF C Blocks	2
	Spacer Blocks	2
Margin Zone 2	Margin Blocks	4

Table 5 : Format of a track (Positive azimuth track)

Zone	Contents	Number of Blocks
Margin Zone 1	Margin Blocks	4
ATF Zone 1	ATF A Blocks	2
	ATF B Blocks	2
	Spacer Blocks	1
Main Data Zone 1	Recorded Data Blocks 1 to 224	224
ATF Zone 2	ATF A Blocks	2
	ATF B Blocks	2
	Spacer Blocks	1
Main Data Zone 2	Recorded Data Blocks 225 to 448	224
ATF Zone 3	ATF A Blocks	2
	ATF B Blocks	2
	Spacer Blocks	1
Margin Zone 2	Margin Blocks	4

There are 471 Blocks in each track.

15.2 Positioning accuracy

The centre of the 236th Block of a track shall be at a distance of 4,460 mm ± 0,021 mm from the Tape Reference Edge. The centre of the 236th Block on the centre line of the track is the midpoint between the first bit of the 234th Block and that of the 239th block. In addition the centres of the 236th Blocks of any pair of adjacent tracks shall not differ by more than 5,4 μm. This is equivalent to 0,5 Block along the track at the centre of the track.

© ISO/IEC 2000 – All rights reserved

Copyright International Organization for Standardization
Provided by IHS under license with ISO
No reproduction or networking permitted without license from IHS
Not for Resale

15.3 Tracking scheme

Tracking shall be achieved by the Automatic Track Finding (ATF) method. ATF blocks shall be allocated to three zones of a track: ATF Zone 1, ATF Zone 2 and ATF Zone 3 as shown in tables 4 and 5.

Each ATF Zone shall comprise Spacer Blocks and ATF Blocks.

Spacer Blocks shall have a length of 730 Channel bits consisting of the repeated Channel bit pattern 1010101010. Spacer Blocks shall be recorded with a positive azimuth on positive azimuth tracks, and with a negative azimuth on negative azimuth tracks.

ATF Blocks shall have a length of 730 Channel bits consisting of the repeated Channel bit pattern 1000010000. ATF Blocks shall be recorded with a positive azimuth.

ATF Blocks are designated as ATF-A, ATF-B and ATF-C for the purpose of illustrating the phase relationships among tracks in figure 40. ATF-B Blocks on track *n*, ATF-C blocks on track *n*-1 and ATF-A Blocks on track *n*-2 shall be recorded in phase.

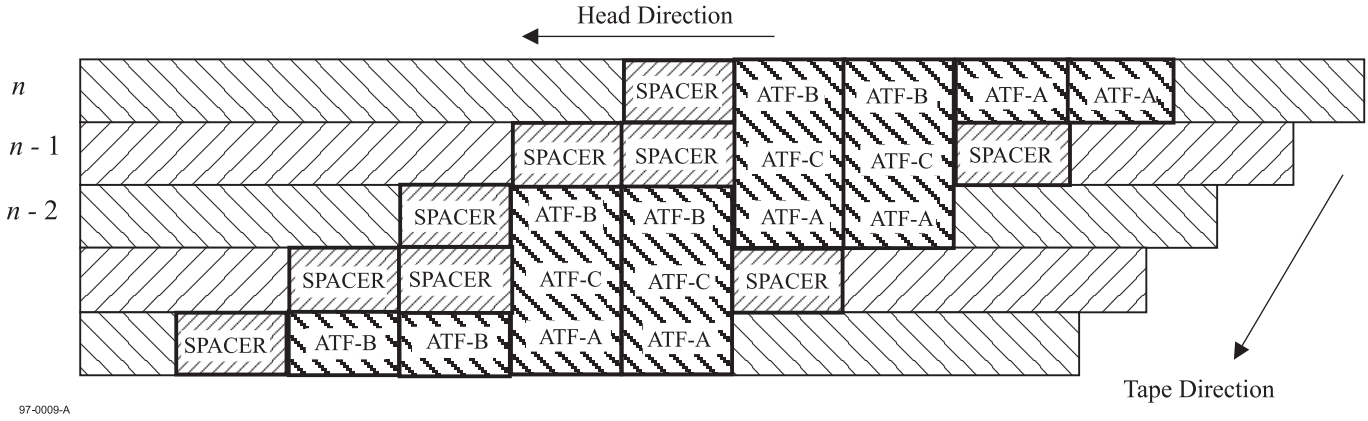

Figure 40 - Allocation of ATF and Spacer Blocks

16 Layout of the tape

The layout of the tape shall consist of a Device Area followed by up to 256 partitions. Each partition shall consist of

— the Reference Area
— the System Area
— the Data Area
— the EOD Area
— the Optional Device Area

© ISO/IEC 2000 – All rights reserved
Copyright International Organization for Standardization
Provided by IHS under license with ISO
No reproduction or networking permitted without license from IHS
Not for Resale

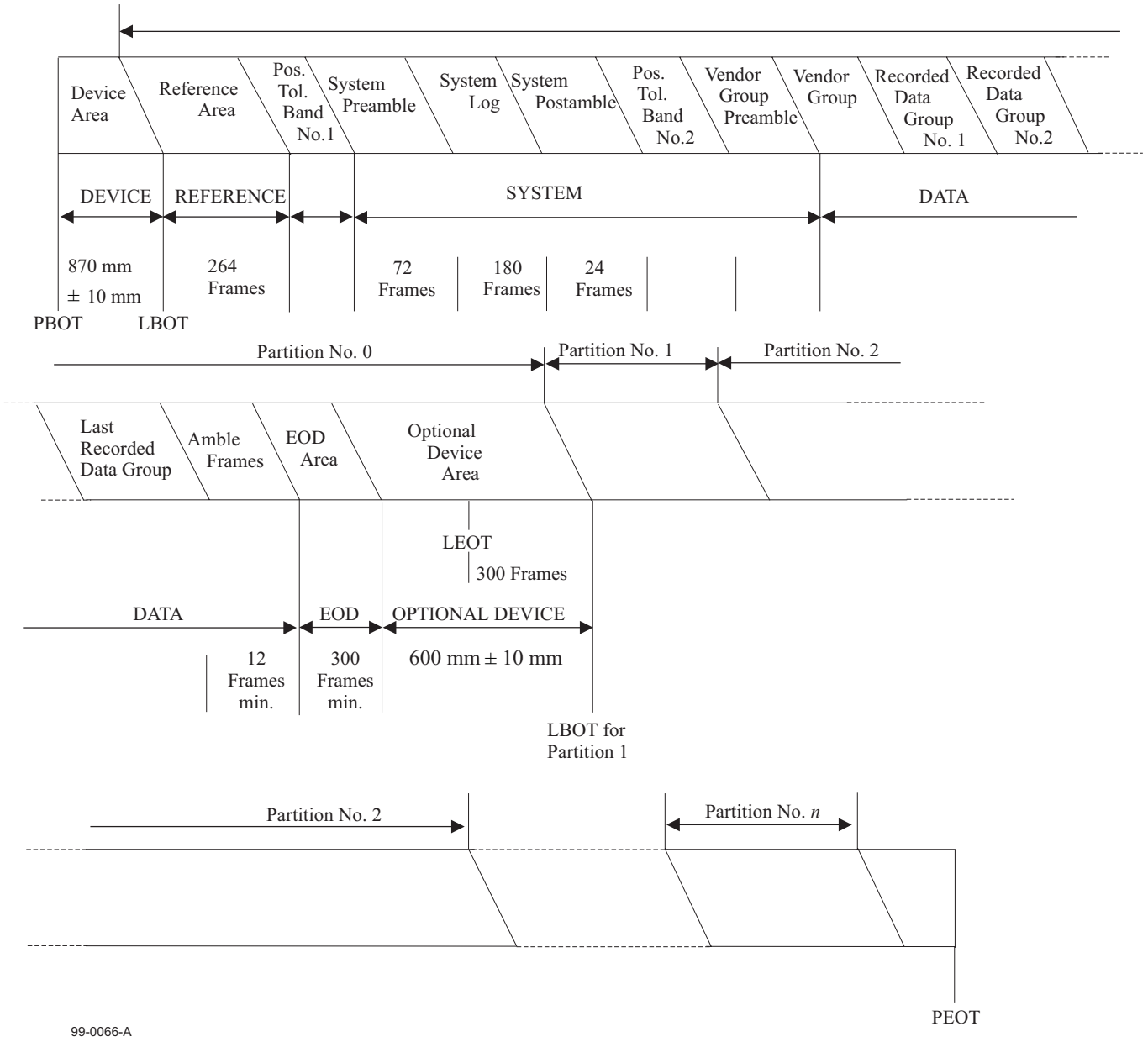

Figure 41 - Layout of the tape

16.1 Device Area

This area shall be the first area on the magnetic tape and shall extend from PBOT to LBOT. It shall not be used for writing data for interchange. Its length, measured parallel to the Tape Reference Edge, from PBOT to the first bit of the first block of the first recorded track of the Reference Area, shall be 870 mm ± 10 mm. It shall consist of three zones: a spin-up zone, a test zone and a guard zone.

The first zone of the Device Area is a spin-up zone. It is the part of the tape which is wrapped around the drum when the tape is loaded into the drive.

The spin-up zone shall be followed by a test zone available for read/write purposes. The contents of these two zones are not specified by this International Standard.

The test zone shall be followed by a guard zone of length 6,2 mm min. in which no recording is permitted.

16.2 Reference Area

This area shall consist of the Frames with AFN 1 to AFN 264, of which the first starts at LBOT and has AFN 1. The Reference Area is used as the physical reference when updating the System Log. The content of these Frames is not specified by this International Standard and shall be ignored in interchange.

© ISO/IEC 2000 – All rights reserved

Copyright International Organization for Standardization
Provided by IHS under license with ISO
No reproduction or networking permitted without license from IHS
Not for Resale

16.3 Position Tolerance Band No. 1

This band shall have a nominal length equivalent to 24 Frames, from AFN 265 to AFN 288. It is used to accommodate the positioning tolerances when updating the System Log. Discontinuities and repetitions of the AFNs may occur in this band. The recorded signals may be ill-defined in this band. The content of these Frames is not specified by this International Standard and shall be ignored in interchange.

16.4 System Area

This area shall consist of the System Preamble, System Log, System Postamble, Position Tolerance Band No. 2, and the Vendor Group Preamble.

16.4.1 System Preamble

The System Preamble shall consist of 72 System Amble Frames with AFN 289 to AFN 360. Their content is not specified by this International Standard and shall be ignored in interchange.

16.4.2 System Log

The System Log shall be recorded in the MIC, it may be recorded also on the tape, see 16.4.2.2.2 and clause 18.

If the System Log is recorded also on the tape, there shall be 180 instances with AFN 361 to AFN 540 of the Frame shown in figure 42 recorded on the tape. In each partition 48 bytes shall be allocated to the Partition Information of the partition. The Partition Information of each partition shall be recorded in the System Log of Partition 0. Figure 42 shows the System Log and Vendor Data information.

If the System Log is recorded in the MIC only, the content of these 180 Frames is not specified by this International Standard and shall be ignored in Interchange. Clause 18 specifies how the System Log is recorded in the MIC.

<table>
<tr><td>1 to 48</td><td>Partition 0 Information</td><td>48 Bytes</td><td rowspan="5">12 288

Bytes</td><td rowspan="8">44 544

Bytes</td></tr>
<tr><td>49 to 96</td><td>Partition 1 Information</td><td>48 Bytes</td></tr>
<tr><td>.
.
.</td><td>.
.
.</td><td>.
.
.</td></tr>
<tr><td>12 240 to 12 288</td><td>Partition 255 Information</td><td>48 Bytes</td></tr>
<tr><td>12 289 to 12 359</td><td colspan="2">Volume Information</td><td>72 Bytes</td></tr>
<tr><td>12 360 and 12 361</td><td colspan="2">System Log Vendor Data Type Number</td><td>2 Bytes</td></tr>
<tr><td>12 362 to 44 544</td><td colspan="2">System Log Vendor Data</td><td>32 182 Bytes</td></tr>
</table>

Figure 42 - System Log with Vendor Data information

If the tape contains only one partition, the 12 240 bytes intended for the Partition 1 Information to Partition 255 Information shall be set to all ZEROs. If the tape contains more than one partition, then the Partition Information for the partition following the last partition defined shall be set to ZEROs.

16.4.2.1 Partition Information

The Partition Information shall comprise the fields specified in figure 43.

© ISO/IEC 2000 – All rights reserved
Copyright International Organization for Standardization
Provided by IHS under license with ISO
No reproduction or networking permitted without license from IHS
Not for Resale

Previous Groups Written			4 Bytes
Total Groups Written			4 Bytes
Set to all ZEROs			1 Byte
Previous Groups Read			3 Bytes
Total Groups Read			4 Bytes
Set to all ZEROs			1 Byte
Total Rewritten Frames			3 Bytes
Set to all ZEROs			1 Byte
Total 3rd ECC Count			3 Bytes
Access Count			4 Bytes
Update Replace Count			4 Bytes
Previous Rewritten Frames			2 Bytes
Previous 3rd ECC Count			2 Bytes
Set to all ZEROs			1 Byte
Load Count			3 Bytes
Set to all ZEROs			1 Byte
Last Valid Absolute Frame Number			3 Bytes
Flag Byte	Bit 1	Prevent Write	1 Byte
	Bit 2	Prevent Read	
	Bit 3	Prevent Write Retry	
	Bit 4	Prevent Read Retry	
	Bit 5	Set to ZERO	
	Bit 6	Set to ZERO	
	Bit 7	Set to ZERO	
	Bit 8	Partition is Opened	
Maximum Absolute Frame Number			3 Bytes

Figure 43 - Partition Information

Where the field of a Partition Information contain numerical values, these are recorded in binary notation in these fields.

16.4.2.1.1 Previous Groups Written

This field shall specify the number of Basic Groups physically written to the partition since the last update of the System Area.

16.4.2.1.2 Total Groups Written

This field shall specify the total number of Basic Groups physically written to the partition since the first time the partition was written.

16.4.2.1.3 Previous Groups Read

This field shall specify the number of Basic Groups physically read from the partition since the last update of the System Area.

16.4.2.1.4 Total Groups Read

This field shall specify the total number of Basic Groups physically read from the tape partition since the first time the partition was written. This number shall not include any read operation which is part of a Read-After-Write check. The number accumulates over the life of the tape unless a format pass is performed, in which case this field is re-set to the value 0.

16.4.2.1.5 Total Rewritten Frames

This field shall be the total number of Frames of the partition that have been rewritten since the partition was first written. It shall be incremented by 1 each time a Frame is repeated following error detection by the Read-After-Write process. This count shall not include any Frames which are written between the original Frame and its rewrite. The number accumulates over the life of the tape unless a format pass is performed, in which case this field is re-set to the value 0.

16.4.2.1.6 Total 3rd ECC Count

This field shall specify the number of Basic Groups which have been physically read and data has not been recovered without requiring the use of C3 correction since the first time the partition was written. The number accumulates over the life of the tape unless a format pass is performed, in which case this field is re-set to the value 0.

16.4.2.1.7 Access Count

If used, this field shall specify the number of accesses to the partition. This field shall be set to all ZEROs if not used.

--`,,```,,,,````-`-`,,`,,`,`,,`---

© ISO/IEC 2000 – All rights reserved

Copyright International Organization for Standardization
Provided by IHS under license with ISO
No reproduction or networking permitted without license from IHS
Not for Resale

16.4.2.1.8 Update Replace Count

If used, this field shall specify the number of write operations to the partition. This field shall be set to all ZEROs if not used.

16.4.2.1.9 Previous Rewritten Frames

This field shall specify the number of Frames of the partition that have been rewritten since the last update of the System area. It shall be incremented by 1 each time a Frame is repeated following error detection by the Read-After-Write process. This count shall not include any Frames which are written between the original Frame and its rewrite.

16.4.2.1.10 Previous 3rd ECC Count

This field shall specify the number of Basic Groups which have been physically read and data has not been recovered without requiring the use of C3 correction since the last update of the System area.

16.4.2.1.11 Load Count

This field shall specify the number of times the tape has been loaded since the first time the tape was written. One load shall consist of threading the tape around the drum of the drive mechanism, positioning the tape ready for use and later unthreading the tape. The number accumulates over the life of the tape unless a format pass is performed, in which case this field is re-set to the value 0. This field shall be Reserved in the System Log of Partition 0 of a partitioned tape.

16.4.2.1.12 Last Valid Absolute Frame Number

This field shall specify the AFN of the last Frame containing valid data. The first Frame of the Reference Area shall have AFN 1.

16.4.2.1.13 Flag Byte

Bit 1 Prevent Write

If set to ZERO, write operation for the partition is enabled
If set to ONE, write operation for the partition is inhibited

Bit 2 Prevent Read

If set to ZERO, read operation for the partition is enabled
If set to ONE, read operation for the partition is inhibited.

Bit 3 Prevent Write Retry

If set to ZERO, write-retry operation for the partition is enabled
If set to ONE, write-retry operation for the partition is inhibited

Bit 4 Prevent Read Retry

If set to ZERO, read-retry operation for the partition is enabled
If set to ONE, read-retry operation for the partition is inhibited

Bits 5 to 7 shall be set to ZERO.

Bit 8 Partition is Opened

Shall be set to ZERO, when all operations in the partition have been performed
Shall be set to ONE before a read and/or a write operation within the partition

16.4.2.1.14 Maximum Absolute Frame Number

This field shall specify the AFN of the last Frame of the last EOD Area.

16.4.2.1.15 Reserved Field

Reserved Fields shall be set to all ZEROs.

© ISO/IEC 2000 – All rights reserved
Copyright International Organization for Standardization
Provided by IHS under license with ISO
No reproduction or networking permitted without license from IHS
Not for Resale

16.4.2.2 Volume Information

This 72-byte field shall contain the information about the volume.

Reserved	5 Bytes	Set to all ZERO	
Length and Thickness Numbers	1 Byte	Bit 1 to Bit 6	Tape Length Number
		Bit 7 and Bit 8	Tape Thickness Number
Flags	1 Byte	Bit 1	AIT Native Flag
		Bit 2	Load/Unload at PBOT
		Bit 3	System Log Location
		Bit 4	
		Bit 5	Presence of MIC
		Bit 6	Set to ZERO
		Bit 7	Set to ZERO
		Bit 8	Set to ZERO
Last Partition Number	1 Byte	Last Partition Number of the cartridge	
Device Area Map	32 Bytes	256 bits of Device Area Allocation Map	
Reserved	32 Bytes	Set to all ZEROs	

Figure 44 - Volume Information

16.4.2.2.1 Length and Thickness Numbers

Bit 6 to bit 1 shall be set to the same value as that recorded by Bit 6 to Bit 1 of the Tape Length and Thickness ID byte (See 11.4.1.2).

Bit 8 and bit 7 when set to

00 Indicate Type A
01 Indicate Type B

Other settings of these bits are prohibited by this International Standard.

16.4.2.2.2 Flags

Bit 1 If set to ZERO, the number of partitions shall be 2
If set to ONE, the maximum number of partitions is limited by the size of the MIC.

Bit 2 If set to ZERO, and there is an Optional Device Area, then load/unload shall be done at the Optional device Area
If set to ONE, load/unload shall be done at the PBTO

Bit 3 and bit 4 These bits shall indicate the location of the System Log.

If set to 10, the System Log is recorded both on the tape and in the MIC
If set to 11, the System Log is recorded in the MIC only

Bit 5 shall be set to ONE to indicate the presence of MIC

Bit 6 to bit 8 shall be set to all ZEROs

Other settings of these bits are prohibited by this International Standard.

16.4.2.2.3 Last Partition Number

This is the last valid partition number on the tape.

16.4.2.2.4 Device Area Map

This is a bit allocation map of the Optional Device Area. There are 256 bits in the 32 bytes. A bit is assigned to each partition. If this bit is set to ONE then the partition contains an Optional Device Area.

--`,,```,,,,````-`-`,,`,,`,`,,`---
© ISO/IEC 2000 – All rights reserved
Copyright International Organization for Standardization
Provided by IHS under license with ISO
No reproduction or networking permitted without license from IHS
Not for Resale

16.4.2.3 System Log Vendor Data Type Number

This number shall be represented by two bytes.

When set to the value 0, the System Log Vendor Data shall be all ZEROs.
When set to the value 1, the System Log Vendor Data shall contain vendor-unique information.

Other values of this number are prohibited by this International Standard.

16.4.3 System Postamble

The System Postamble shall consist of 24 System Amble Frames AFN 541 to AFN 564. Their content is not specified by this International Standard and shall be ignored in interchange.

NOTE - It is recommended that the continuum comprising the System Preamble, the System Log, the Vendor Data information and the System Postamble be written in a continuous motion when the System Log is updated.

16.4.4 Position Tolerance Band No. 2

This band shall have a nominal length equivalent to 24 Frames. The content of these Frames is not specified by this International Standard and shall be ignored in interchange.

16.4.5 Vendor Group Preamble

The Vendor Group Preamble shall consist of 72 Frames with AFN 589 to AFN 660. The Vendor Group Preamble shall immediately precede the Vendor Group and be contiguous with it. The content of these Frames is not specified by this International Standard and shall be ignored in interchange.

16.5 Data Area

This area shall consist of the Vendor Group and one or more Recorded Data Groups.

16.5.1 Vendor Group

A Vendor Group is the recorded instance of Basic Group No. 0, the content of which is not specified by this International Standard. The Vendor Group is formed from the bytes of that Basic Group by applying the operations described in clause 11 and recording the resulting Frames. The first of these Frames shall have AFN 661.

In addition none or either or both of two further operations, namely ECC3 and Repeated Frames may be applied.

No unrecorded space or physical discontinuity or seam or AFN discontinuity or repetition may occur within a Vendor Group.

16.5.2 Recorded Data Group

Each Recorded Data Group is a recorded instance of a Basic Group, and is formed from the data sent from a host computer by applying the operations described in clause 11 and recording the resulting Frames in the sequence of their Logical Frame Numbers.

In addition, none or either or both of two further operations may be applied. These are ECC3 and Repeated Frames. No unrecorded space or physical discontinuity or seam or, AFN discontinuity or repetition may occur within a Recorded Data Group.

16.5.3 ECC3

The Error Correction Code 3 has the capability of correcting any two tracks which are bad in a Recorded Data Group. The ECC3 data is derived from the 18 G1 Sub-Groups of the Basic Group to form a 19th and a 20th G1 Sub-Group. It uses the following Reed-Solomon code:

$$GF(2^8)\ (20, 18, 3)$$

The calculation on $GF(2^8)$ shall be defined by the following polynomial:

$$G(x) = x^8 + x^4 + x^3 + x^2 + 1 \qquad \alpha = (00000010)$$

The interleave depth of ECC3 shall be one frame, the ECC bytes shall satisfy

$$H_R \times V_R = 0$$

The generator polynomial shall be

$$G_R(x) = \prod_{i=0}^{j=1} (x - \alpha^i)$$

© ISO/IEC 2000 – All rights reserved
Copyright International Organization for Standardization
Provided by IHS under license with ISO
No reproduction or networking permitted without license from IHS
Not for Resale

$$\begin{bmatrix} 1 & 1 & 1 & 1 & ... & 1 & 1 & 1 \\ \alpha^{19} & \alpha^{18} & \alpha^{17} & \alpha^{16} & ... & \alpha^{2} & \alpha^{1} & \alpha^{0} \end{bmatrix}$$

$$H_R = \begin{bmatrix} D_{n \times 2 + i \times 22272 + 0 + 0 \times 44544} \\ D_{n \times 2 + i \times 22272 + 1 + 0 \times 44544} \\ D_{n \times 2 + i \times 22272 + 0 + 1 \times 44544} \\ D_{n \times 2 + i \times 22272 + 1 + 1 \times 44544} \\ D_{n \times 2 + i \times 22272 + 0 + 2 \times 44544} \\ D_{n \times 2 + i \times 22272 + 1 + 2 \times 44544} \\ D_{n \times 2 + i \times 22272 + 0 + 3 \times 44544} \\ D_{n \times 2 + i \times 22272 + 1 + 3 \times 44544} \\ D_{n \times 2 + i \times 22272 + 0 + 4 \times 44544} \\ D_{n \times 2 + i \times 22272 + 1 + 4 \times 44544} \\ D_{n \times 2 + i \times 22272 + 0 + 5 \times 44544} \\ D_{n \times 2 + i \times 22272 + 1 + 5 \times 44544} \\ D_{n \times 2 + i \times 22272 + 0 + 6 \times 44544} \\ D_{n \times 2 + i \times 22272 + 1 + 6 \times 44544} \\ \vdots \\ P_{n \times 2 + i \times 22272 + 0 + 19 \times 44544} \\ Q_{n \times 2 + i \times 22272 + 1 + 19 \times 44544} \end{bmatrix}$$

n = 0, 1, 2, ..., 22 271

i = 0, 1

D_n = User data byte number

P_n = Parity byte number

Q_n = Parity byte number

16.5.4 Multiple Recorded Instances

Each Basic Group, other than Basic Group No. 0, may be recorded in a sequence of contiguous instances. The maximum number of such instances shall be 8. Within a sequence of Recorded Data Groups which are derived from the same Basic Group the values of Logical Frame ID, Position and AFN will be different. There will also be differences in the values of the Parity bytes computed from these. There may also be differences in the number of Repeated Frames per Recorded Data Group in such a sequence.

16.5.5 Repeated Frames

In the Data Area, a Frame within a Recorded Data Group may be repeated by rewriting it further along the tape. The repeated Frame may be written after zero, one, two, three, four, five, six or seven other Frames have been written. Each such sequence (i.e. the original or repeated Frame and the zero, one, two, three, four, five, six or seven following Frames) can be repeated multiple times, e.g. to allow skipping over bad areas on the tape. The maximum number of instances of a sequence shall be 256, i.e. the original and up to 255 repetitions.

© ISO/IEC 2000 – All rights reserved

Copyright International Organization for Standardization
Provided by IHS under license with ISO
No reproduction or networking permitted without license from IHS
Not for Resale

Intermediate Frames, i.e. those Frames written between the original Frame and its next occurrence shall start with the Frame the Logical Frame Number of which is the next in the normal sequence, and shall follow the correct sequence thereafter. The correct sequence requires successive Frames to have Logical Frame Numbers which increment by one until the last Frame in the Recorded Data Group, or the ECC3 Frames if present, after which they restart from 0 (for an Amble Frame) or one (for the first Frame of the next Recorded Data Group). Amble Frames are allowed in this sequence, provided the limit of seven Intermediate Frames is not exceeded. The final occurrence of the repeated Frame shall be followed by the Intermediate Frames written in the correct sequence. Discontinuities or repeated AFNs shall not occur.

16.5.6 Appending and overwriting

When new data is appended to data already recorded on tape, or existing data is overwritten by new data, the point at which recording may start shall be referenced to the last Frame (Frame A in figure 46) of a Recorded Data Group. If Multiple Recorded Instances of the last group exist, the relevant Recorded Data Group is the last in the sequence. If Repeated Frames have been recorded, the relevant Frame is the last repetition of the last Frame. The smallest unit of appending or overwriting is a Recorded Data Group.

NOTE - After overwriting commences, all data between the current recording point and PEOT is logically inaccessible.

The rules for appending and overwriting are identical. For simplicity, the following description refers only to appending.

Data may be appended to the tape by either the seamless or non-seamless methods. An appending operation may be described as seamless only if the appended tracks are placed so as to form a continuous sequence with the previous tracks. No track shall be partially overwritten to the point of being unreadable nor shall any gaps be left between tracks.

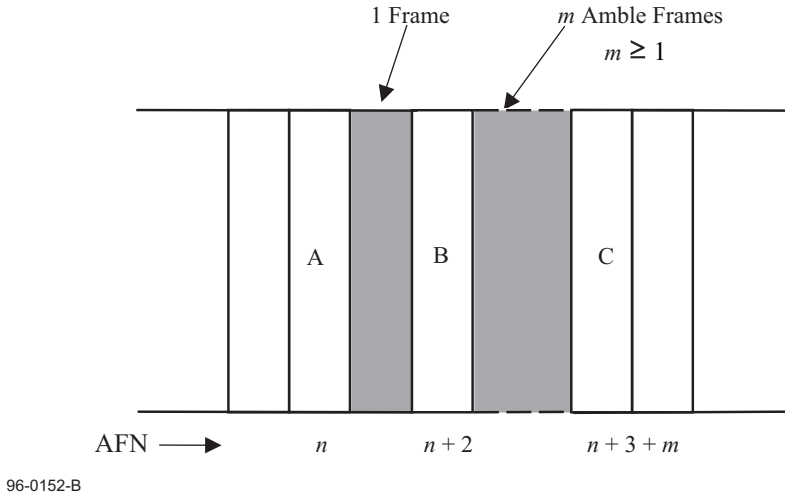

Figure 45 - Appending rules

The Frames up to, and including, Frame A on figure 45 contain information which is to be retained. The append starts with Amble Frames at Frame B and the information at Frame C.

16.5.6.1 Seamless appending rules

Rule 1. There shall be one Frame between Frame A and Frame B, i.e. if Frame A has AFN *n*, then Frame B shall have AFN *n*+2.

Rule 2. The Frame written between Frames A and B shall be contiguous with Frame A, i.e. no unrecorded space between A and B is permitted, nor is any discontinuity or repetition of AFNs, nor is any physical discontinuity. The Group Number of this Frame shall be greater than that of Frame A, unless this Frame is an Amble Frame, in which case its Group Number shall be equal to that of Frame A. The content of this Frame shall be ignored.

Rule 3. There shall be a minimum of one Amble Frame between Frames B and C, i.e. if Frame B has AFN *n*+2, then Frame C shall have AFN *n*+4 minimum. No unrecorded space, physical discontinuity, or AFN discontinuity or repetition is allowed between Frames B and C.

Rule 4. The position of the first track of Frame B (AFN *n*+2), as measured along the length of the tape at the point shown in figure 46, shall be at a distance of $x = 257{,}8\ \mu m \pm 42{,}9\ \mu m$ from the first track of the Frame with AFN *n*+1.

© ISO/IEC 2000 – All rights reserved
Copyright International Organization for Standardization
Provided by IHS under license with ISO
No reproduction or networking permitted without license from IHS
Not for Resale

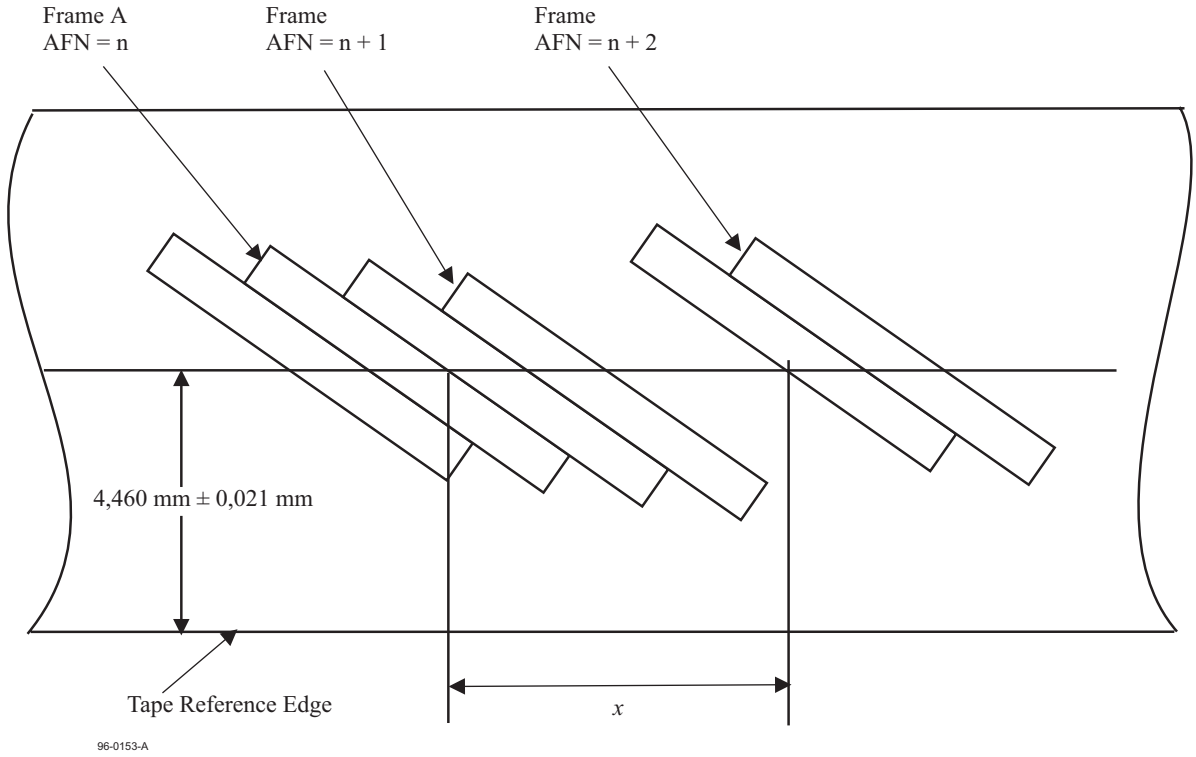

Figure 46 - Tolerance on seamless appending

16.5.6.2 Non-seamless appending rules

Rule 1. The distance between Frame A and Frame B shall be sufficient for a minimum of 1 and a maximum of 11 Frames. No unrecorded space shall be permitted between Frame A and Frame B. One or more Frames between Frame A and Frame B may be ill-defined, e.g., as a result of partial overwriting at an append point.

Rule 2. Discontinuities and repetitions of AFN are permitted between Frame A and Frame B, provided that, where Frame A has AFN *n*,

— all Frames have an AFN greater than *n*, and
— Frame B has AFN *n*+2 min. and AFN *n*+12 max.

Rule 3. Amble Frames between Frame A and Frame B shall have a value of Group Number which is equal to that of Frame A. Other Frames between Frame A and Frame B shall have a value of Group Number which is greater than that of Frame A.

Rule 4. There shall be a minimum of 29 Frames between Frames B and C, i.e. if Frame B has AFN *n*', where $n+2 \leq n' \leq n+12$, then Frame C shall have AFN *n*'+30 minimum. No unrecorded space, physical discontinuity or seam or AFN discontinuity or repetition shall be allowed between Frames B and C.

16.6 EOD Area

The Data Area shall be followed by an EOD Area.

In all partitions, if the length of tape between the last Amble Frame and LEOT is greater than, or equal to, 300 Frames, the EOD Area shall consist of at least 300 Frames. If the length of tape between the last Amble Frame and LEOT is less than 300 Frames, the length of the EOD Area shall be equal to that length.

In the last partition, the EOD Area shall consist of a minimum of 300 Amble Frames, and shall start after the last Amble Frame in the sequence of Amble Frames which follows the last Recorded Data Group. The first Frame of the EOD Area shall be recorded at least 5 000 mm before PEOT.

More than one EOD Area may exist on the tape. More than one EOD Area may exist on a Partition. The EOD Area closest to LBOT in a partition shall be the only one valid for information interchange.

16.7 Optional Device Area

The EOD Area may be followed by an Optional Device Area which extends up to the Partition Boundary or PEOT. The contents of this Optional Device Area are not defined for interchange.

© ISO/IEC 2000 – All rights reserved

Copyright International Organization for Standardization
Provided by IHS under license with ISO
No reproduction or networking permitted without license from IHS
Not for Resale

16.8 Logical End Of Tape (LEOT)

The LEOT shall be a point at a distance of 300 Frames before the Partition Boundary.

16.9 Logical Beginning of Tape (LBOT)

The LBOT is the Partition Boundary. The first Frame after this point shall have the AFN 1.

16.10 Early Warning Point - EWP

For a new or bulk-erased tape the position of the EWP is calculated by the drive writing the tape. The calculation shall ensure that the EWP is not less than 5 258 mm before PEOT. Until data is recorded beyond the calculated EWP no indication of its position is recorded on the tape. When data is first recorded beyond the calculated EWP, the setting of the AEWP bit changes from ZERO to ONE in the last Basic Group which is completely or partially recorded before that point. This changeover then denotes the position of the EWP when the tape is subsequently read.

For the last partition containing data which is being overwritten or appended, if the point at which overwriting commenced is before the EWP as defined prior to the commencement of overwriting, a new position of the EWP shall be calculated by the drive currently writing the tape. The calculation shall ensure that the EWP is not less than 5 258 mm before PEOT. When data is recorded beyond this calculated EWP, the setting of the AEWP bit changes from ZERO to ONE in the last Basic Group which is completely or partially recorded before that point. This changeover then denotes the position of the EWP when the tape is subsequently read.

For the last partition containing data which is being overwritten or appended, if the AEWP bit changes from ZERO to ONE prior to the point at which overwriting commenced, the position of the EWP shall be denoted by that changeover, i.e. the AEWP bit shall be set to ONE in all overwriting groups.

Within an empty partition the position of the EWP is calculated by the drive writing the tape. The calculation shall ensure that the EWP is not less than 1 000 Frames before the LEOT. Until data is recorded beyond the calculated EWP, no indication of its position is recorded on the tape. When data is first recorded beyond the calculated EWP, the setting of the AEWP bit changes from ZERO to ONE in the Basic Group which is completely or partly recorded before that point. This changeover then denotes the position of the EWP when the tape is subsequently read.

For partitions, except for the last partition, containing data which is being overwritten, if the point at which overwriting commenced is before the EWP defined before the commencement of overwriting, a new position of the EWP shall be calculated by the drive currently writing the tape. The calculation shall ensure that this calculated EWP is not less than 1 000 Frames before the LEOT. When data is recorded beyond this calculated EWP, the setting of the AEWP bit changes from ZERO to ONE in the Basic Group which is completely or partly recorded before that point. This changeover then denotes the position of the EWP when the tape is subsequently read.

For partitions, except the last one, containing data which is being overwritten, if the AEWP bit changes from ZERO to ONE prior to the point at which overwriting commenced, the position of the EWP is denoted by that changeover, i.e. the AEWP bit is set to ONE in all overwritten Basic Groups in this partition.

16.11 Empty Partition

An empty partition shall contain :

— a Reference Area
— a System Area
— a Data Area comprising a Vendor Group and at least 12 Amble Frames
— a minimum of 300 Frames identical with those of the EOD Area of a partition

The Vendor Group Preamble, the Data Area and the following Amble Frames shall form a continuum which shall extend to the Partition Boundary or PEOT and in which no unrecorded space, physical discontinuity or seam or AFN discontinuity or repetition shall occur.

16.12 Initialization

Initialization is a procedure which shall be carried out before the first use of a tape cartridge for recording user data (it may be also used at other times). The procedure ensures that there shall be no unrecorded space between LBOT and the end of the Vendor Group. The extent from LBOT to the end of the Vendor Group shall be written as a continuum in which the Position Tolerance Bands No. 1 and No. 2 shall have each a nominal number of Frames of 24. The Frames in the Position Tolerance Band No. 1 shall have their Area ID set to the Reference Area ID.

If an initialization is performed on a recorded tape, it will destroy all data thereon, including the history data in the Volume Information and Partition Information.

© ISO/IEC 2000 – All rights reserved
Copyright International Organization for Standardization
Provided by IHS under license with ISO
No reproduction or networking permitted without license from IHS
Not for Resale

NOTE - The tape layout is such that a separate initialization on a new or bulk-erased tape is not necessary prior to the recording of the first Recorded Data Group. The Reference Area, System Area and Vendor Group can be recorded at a time immediately prior to the recording of the first Recorded Data Group.

17 Housekeeping Frames

Housekeeping Frames shall not contain any user data or separators. Data shall be recorded only in the ID Information (see 11.4.1), this data being dependent on the area of the magnetic tape where the Housekeeping Frame is recorded. The content of Housekeeping Frames is not specified by this International Standard.

There are two types of Housekeeping Frames, namely Amble Frames and System Amble Frames.

17.1 Amble Frames

Amble Frames shall be permitted only in the Data Area. Their Logical Frame Number shall be 0.

Amble Frames shall not be permitted within a Recorded Data Group, except within a run of Intermediate Frames, and are not permitted before the Vendor Group.

An Amble Frame shall be preceded either by another Amble Frame or by the last Frame of a Recorded Data Group, except at an append point.

The content of these Frames is not specified by this International Standard and shall be ignored in interchange.

17.2 System Amble Frames

System Amble Frames shall be recorded within the System Area; their Absolute Frame Numbers in the range 289 to 360 and 541 to 564.

The content of these Frames is not specified by this International Standard and shall be ignored in interchange.

18 Content of the MIC

This clause specifies the content of the MIC. The maximum number of Partitions on the tape depends on the capacity of the MIC. Figure 47 specifies the content of the MIC when 12 Partitions are defined. The fields of the Volume Information are specified in 16.4.2.2. The fields of the Partition Information are specified in 16.4.2.1.

The contents of the shaded fields are not specified by this International Standard and shall be ignored in interchange.

--`,,```,,,,````-`-`,,`,,`,`,,`---

© ISO/IEC 2000 – All rights reserved

Copyright International Organization for Standardization
Provided by IHS under license with ISO
No reproduction or networking permitted without license from IHS
Not for Resale

1			1 Byte	
2	00000001		1 Byte	
3 to 139			137 Bytes	
140 to 144	Volume Information	Set to all ZEROs	5 Bytes	72 Bytes
145		Length and Thickness	1 Byte	
146		Flags	1 Byte	
147		Last Partition Number	1 Byte	
148 to 179		Device Area Allocation Map	32 Bytes	
180 to 211		Set to all ZEROS	32 Bytes	
212 to 781			570 Bytes	
782 to 797			16 Bytes	
798 to 845	Partition 0 Information		48 Bytes	
846 to 861			16 Bytes	
862 to 909	Partition 1 Information		48 Bytes	
910 to 925			16 Bytes	
926 to 973	Partition 2 Information		48 Bytes	
974 to 989			16 Bytes	
990 to 1037	Partition 3 Information		48 Bytes	
1038 to 1053			16 Bytes	
1054 to 1101	Partition 4 Information		48 Bytes	
1102 to 1117			16 Bytes	
1118 to 1165	Partition 5 Information		48 Bytes	
1166 to 1181			16 Bytes	
1182 to 1229	Partition 6 Information		48 Bytes	
1230 to 1245			16 Bytes	
1246 to 1293	Partition 7 Information		48 Bytes	
1294 to 1309			16 Bytes	
1310 to 1357	Partition 8 Information		48 Bytes	
1358 to 1373			16 Bytes	
1374 to 1421	Partition 9 Information		48 Bytes	
1422 to 1437			16 Bytes	
1438 to 1485	Partition 10 Information		48 Bytes	
1486 to 1501			16 Bytes	
1502 to 1549	Partition 11 Information		48 Bytes	
1550 to 2048			470 Bytes min. from the end of the memory	

Figure 47 - Content of the MIC in the case of 12 Partitions

--`,,```,,,,````-`-`,,`,,`,`,,`---

© ISO/IEC 2000 – All rights reserved
Copyright International Organization for Standardization
Provided by IHS under license with ISO
No reproduction or networking permitted without license from IHS
Not for Resale

Annex A
(normative)

Measurement of light transmittance

A.1 Introduction

The following description outlines the general principle of the measuring equipment and measuring method to be applied when measuring the light transmittance of tape.

For the purpose of this International Standard "light transmittance" is defined by convention as the relationship between the reading obtained from the measuring equipment with the test piece inserted and the reading obtained when no test piece is present. The transmittance value is expressed as the percentage ratio of the two readings.

A.2 Description of the measuring equipment

The equipment shall consist of

— the radiation source;
— the radiation receiver;
— the measuring mask;
— the optical path;
— the measuring circuitry.

A.2.1 Radiation source

An infra-red light-emitting diode (LED) with the following parameters shall be used:

wavelength at peak emission : 850 nm ± 50 nm
half-power bandwidth : ± 50 nm

A.2.2 Radiation receiver

A flat silicon photo diode shall be used. It shall be operated in the short circuit mode.

A.2.3 Measuring mask

The measuring mask shall have a thickness of 2 mm and a circular aperture of diameter *d* such that the area is 80 % to 100 % of the active area of the photo diode.

The surface of the mask shall be matt black.

The test piece shall be held firmly against the mask to cover the aperture and to ensure that no ambient light leaks past.

A.2.4 Optical path (figure A.1)

The optical path shall be perpendicular to the mask. The distance from the emitting surface of the LED to the mask shall be

$$L = \frac{d}{2\tan\alpha} \text{ mm}$$

where *d* is in mm and α is the angle where the relative intensity of the LED is equal to, or greater than, 95% of the maximum intensity of the optical axis.

A.2.5 Finish

The whole assembly shall be enclosed in a matt black case.

A.2.6 Measuring circuitry (figure A.2)

The components of the measuring circuitry are

E : regulated power supply with variable output voltage
R : current-limiting resistor
LED : light-emitting diode

© ISO/IEC 2000 – All rights reserved

Copyright International Organization for Standardization
Provided by IHS under license with ISO
No reproduction or networking permitted without license from IHS
Not for Resale

Di : silicon photo diode
A : operational amplifier
R_{f0}, R_{f1} : feedback resistors
S : gain switch
V : voltmeter

The forward current of the LED, and consequently its radiation power, can be varied by means of the power supply E.

Di is operating in the short circuit mode.

The output voltage of the operational amplifier is given by

$$V_0 = I_k \times R_f$$

where:

I_k is the short-circuit current of Di.

The output voltage is therefore a linear function of the light intensity.

$R_{f0}$and R_{f1}shall be low temperature-drift resistors with an accuracy of 1%. The following ratio applies

$$\frac{R_{f0}}{R_{f1}} = \frac{1}{20}$$

A.3 Measuring method

— Set switch S to position 0.

— With no test piece mounted vary the supply voltage of E until voltmeter V reads full scale (100 %).

— Mount a leader or trailer tape on the mask. The reading of the voltmeter shall be in the range 60 % to 100 %.

— Mount a test piece of magnetic tape on the mask. Set switch S to position 1. Full deflection of the voltmeter now represents a light transmittance of 5 %.

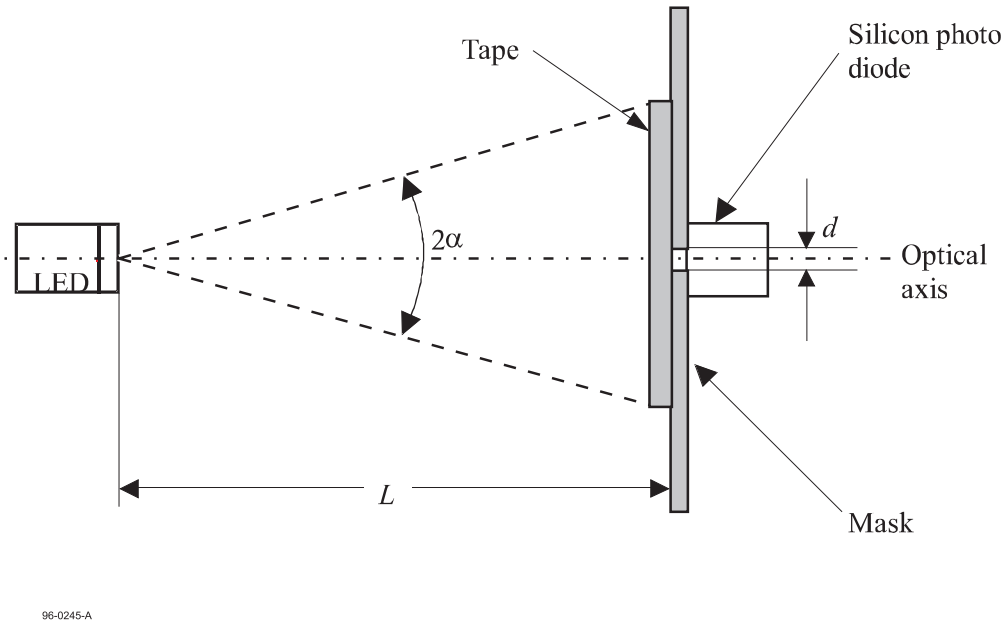

Figure A.1 - Optical arrangement

© ISO/IEC 2000 – All rights reserved
Copyright International Organization for Standardization
Provided by IHS under license with ISO
No reproduction or networking permitted without license from IHS
Not for Resale

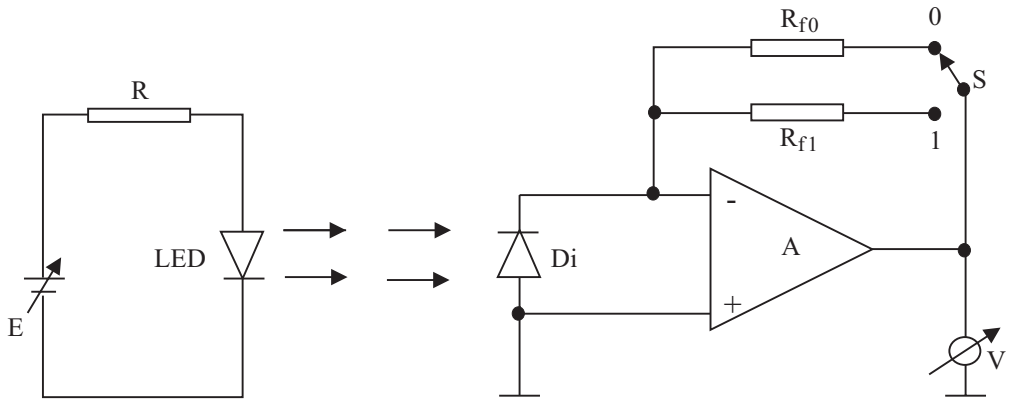

93-0124-B

Figure A.2 - Measuring circuitry

-`,,```,,,,````-`-`,,`,,`,`,,`---
© ISO/IEC 2000 – All rights reserved
Copyright International Organization for Standardization
Provided by IHS under license with ISO
No reproduction or networking permitted without license from IHS
Not for Resale

Annex B
(normative)

Measurement of Signal-to-Noise Ratio

The Signal-to-Noise Ratio shall be measured using a spectrum analyzer with a resolution bandwidth of 3 kHz.

Unless otherwise stated, the test conditions are those defined in clause 10 of this International Standard.

B.1 a.c. erase the tape to be tested.

B.2 Record the tape at 2 857,1 ftpmm. The associated recording frequency is denoted f_1.

B.3 Measure the rms signal amplitude by gating the sweep of the spectrum analyzer. Begin the measurements 1 ms after initial read head contact with the tape. Take the measurements for 1 ms. Each sweep yields one measured value. Compute the average of 8 measured values. This is S_{tape}.

Measure the total rms noise level at frequency f_2, where f_2 is 2 MHz smaller than f_1. Again take measurements for 1 ms as above. Each sweep yields one measured value. Compute the average of 100 measured values. This is N_{total}.

B.4 Measure the rms read channel noise level at frequency f_2 for 1 ms as in B.3, without a tape loaded but with the motors running. Each sweep yields one measured value. Compute the average of 8 measured values. This is N_{amp}.

B.5 Compute the Signal-to-Noise Ratio for this pass, $20 \log \frac{S_{tape}}{N_{tape}}$ dB,

where

$N_{tape} = \sqrt{N_{total}^2 - N_{amp}^2}$.

$\frac{N_{amp}}{N_{tape}}$ shall be less than 0,7.

B.6 Repeat B3 to B5 for at least 10 passes. Take the average of the 10 Signal-to-Noise Ratios to determine the Signal-to-Noise Ratio for the tape (SNR_{tape}).

B.7 Repeat B.1 to B.6 for the Secondary Standard Reference Tape, to give SNR_{MSRT}.

The Signal-to-Noise Ratio characteristic is SNR_{tape} - SNR_{MSRT} dB.

© ISO/IEC 2000 – All rights reserved
Copyright International Organization for Standardization
Provided by IHS under license with ISO
No reproduction or networking permitted without license from IHS
Not for Resale

Annex C
(normative)

Method for determining the nominal and the maximum allowable recorded levels (pre-recording condition)

The following tests shall be carried out under the conditions defined in clause 10 of this International Standard.

C.1 Method for determining the Nominal Recorded Level

C.1.1 Read the section of the Secondary Standard Amplitude Calibration Tape that has been recorded at 3 809,5 ftpmm. Note the read output and apply the appropriate calibration factor.

C.1.2 a.c. erase the Secondary Standard Reference Tape and record at 3 809,5 ftpmm, increasing the write current from a low value until the output on read equals, after applying the appropriate calibration factor, the value noted in C.1.1.

C.1.3 a.c. erase the interchange tape and record at 3 809,5 ftpmm with the current determined in C.1.2.

The read output from this tape is the Nominal Recorded Level for the physical recording density of 3 809,5 ftpmm.

C.1.4 Repeat C.1.1 to C.1.3 for the physical recording densities of 1 428,6 ftpmm, 1 904,8 ftpmm, 2 857,1 ftpmm and 3 809,5 ftpmm.

C.2 Method for determining the Maximum Allowable Recorded Level

C.2.1 a.c. erase the Secondary Standard Reference Tape and record at 3 809,5 ftpmm, increasing the write current until the output on read equals, after applying the appropriate calibration factor, 120 % of the value noted in C.1.1.

C.2.2 a.c. erase the interchange tape and record at 3 809,5 ftpmm with the current determined in C.2.1.

The read output from this tape is the Maximum Allowable Recorded Level for the physical recording density of 3 809,5 ftpmm.

C.2.3 Repeat C.2.1 and C.2.2 for the physical recording densities of 1 428,6 ftpmm, 1 904,8 ftpmm and 2 857,1 ftpmm.

C.3 Limits for the recorded levels

As a history of excessive recording levels can impair the operation of the recording system used in this International Standard it is necessary to prescribe limits for the recording levels to which the tape has been subjected since the last bulk erasure and for the levels used when recording a tape for interchange. These levels are, for each of the physical recording densities of 1 428,6 ftpmm, 1 904,8 ftpmm, 2 857,1 ftpmm and 3 809,5 ftpmm, the Maximum Allowable Recorded Level for that physical recording density.

NOTE - It is recommended that a tape to be used for interchange should not have been previously recorded at levels higher than its Nominal Recorded Levels at the physical recording densities of 1 428,6 ftpmm, 1 904,8 ftpmm, 2 857,1 ftpmm and 3 809,5 ftpmm.

© ISO/IEC 2000 – All rights reserved

Copyright International Organization for Standardization
Provided by IHS under license with ISO
No reproduction or networking permitted without license from IHS
Not for Resale

Annex D
(normative)

Representation of 8-bit bytes by 10-bit patterns

D.1 The 8-bit bytes are represented with the most significant bit to the left and the least significant bit to the right.

The 10-bit patterns are represented with the bit recorded first to the left and the bit recorded last to the right.

D.2 The magnetic recording system chosen requires that the d.c. level of the recorded signals be maintained near zero.

All 10-bit patterns are either balanced to d.c. level of zero or have a d.c. imbalance of 6:4 or 4:6.

Each 10-bit pattern is accompanied by an indicator Q which instructs the translator which of the two alternative patterns should be selected for the next 10-bit pattern in order to maintain the lowest d.c. level.

Q' is the d.c. information of the previous pattern.

Q is the d.c. information of the current pattern.

D.3 The left-hand column indicates the hexadecimal notation of the 8-bit byte for ease of search.

© ISO/IEC 2000 – All rights reserved
Copyright International Organization for Standardization
Provided by IHS under license with ISO
No reproduction or networking permitted without license from IHS
Not for Resale

		Q' = -1			Q' = 1		
	8-bit byte	10-Channel bit pattern	DC	Q	10-Channel bit pattern	DC	Q
(00)	00000000	0101010101	0	1	0101010101	0	-1
(01)	00000001	0101010111	0	-1	0101010111	0	1
(02)	00000010	0101011101	0	-1	0101011101	0	1
(03)	00000011	0101011111	0	1	0101011111	0	-1
(04)	00000100	0101001001	0	-1	0101001001	0	1
(05)	00000101	0101001011	0	1	0101001011	0	-1
(06)	00000110	0101001110	0	1	0101001110	0	-1
(07)	00000111	0101011010	0	1	0101011010	0	-1
(08)	00001000	0101110101	0	-1	0101110101	0	1
(09)	00001001	0101110111	0	1	0101110111	0	-1
(0A)	00001010	0101111101	0	1	0101111101	0	-1
(0B)	00001011	0101111111	0	-1	0101111111	0	1
(0C)	00001100	0101101001	0	1	0101101001	0	-1
(0D)	00001101	0101101011	0	-1	0101101011	0	1
(0E)	00001110	0101101110	0	-1	0101101110	0	1
(0F)	00001111	0101111010	0	-1	0101111010	0	1
(10)	00010000	1101010010	0	1	1101010010	0	-1
(11)	00010001	0100010010	2	-1	1100010010	-2	-1
(12)	00010010	0101010010	0	-1	0101010010	0	1
(13)	00010011	0101110010	0	1	0101110010	0	-1
(14)	00010100	1101110001	2	1	0101110001	-2	1
(15)	00010101	1101110011	2	-1	0101110011	-2	-1
(16)	00010110	1101110110	2	-1	0101110110	-2	-1
(17)	00010111	1101110010	0	-1	1101110010	0	1

© ISO/IEC 2000 – All rights reserved

Copyright International Organization for Standardization
Provided by IHS under license with ISO
No reproduction or networking permitted without license from IHS
Not for Resale

		Q' = -1			Q' = 1		
	8-bit byte	10-Channel bit pattern	DC	Q	10-Channel bit pattern	DC	Q
(18)	00011000	0101100101	2	-1	1101100101	-2	-1
(19)	00011001	0101100111	2	1	1101100111	-2	1
(1A)	00011010	0101101101	2	1	1101101101	-2	1
(1B)	00011011	0101101111	2	-1	1101101111	-2	-1
(1C)	00011100	0101111001	2	1	1101111001	-2	1
(1D)	00011101	0101111011	2	-1	1101111011	-2	-1
(1E)	00011110	0101111110	2	-1	1101111110	-2	-1
(1F)	00011111	0101101010	2	-1	1101101010	-2	-1
(20)	00100000	0111010101	0	-1	0111010101	0	1
(21)	00100001	0111010111	0	1	0111010111	0	-1
(22)	00100010	0111011101	0	1	0111011101	0	-1
(23)	00100011	0111011111	0	-1	0111011111	0	1
(24)	00100100	1111010001	2	1	0111010001	-2	1
(25)	00100101	1111010011	2	-1	0111010011	-2	-1
(26)	00100110	1111010110	2	-1	0111010110	-2	-1
(27)	00100111	0111011010	0	-1	0111011010	0	1
(28)	00101000	0111110101	0	1	0111110101	0	-1
(29)	00101001	0111110111	0	-1	0111110111	0	1
(2A)	00101010	0111111101	0	-1	0111111101	0	1
(2B)	00101011	0010011011	2	-1	1010011011	-2	-1
(2C)	00101100	0111101001	0	-1	0111101001	0	1
(2D)	00101101	0111101011	0	1	0111101011	0	-1
(2E)	00101110	0111101110	0	1	0111101110	0	-1
(2F)	00101111	0111111010	0	1	0111111010	0	-1

Copyright International Organization for Standardization
Provided by IHS under license with ISO
No reproduction or networking permitted without license from IHS
Not for Resale
© ISO/IEC 2000 – All rights reserved

		Q' = -1			Q' = 1		
	8-bit byte	**10-Channel bit pattern**	**DC**	**Q**	**10-Channel bit pattern**	**DC**	**Q**
(30)	00110000	0111010010	0	1	0111010010	0	-1
(31)	00110001	1110010010	2	-1	0110010010	-2	-1
(32)	00110010	1111010010	0	-1	1111010010	0	1
(33)	00110011	1111110010	0	1	1111110010	0	-1
(34)	00110100	0111110001	2	1	1111110001	-2	1
(35)	00110101	0111110011	2	-1	1111110011	-2	-1
(36)	00110110	0111110110	2	-1	1111110110	-2	-1
(37)	00110111	0111110010	0	-1	0111110010	0	1
(38)	00111000	0111000101	2	-1	1111000101	-2	-1
(39)	00111001	0111000111	2	1	1111000111	-2	1
(3A)	00111010	0111001101	2	1	1111001101	-2	1
(3B)	00111011	0111001111	2	-1	1111001111	-2	-1
(3C)	00111100	0111011001	2	1	1111011001	-2	1
(3D)	00111101	0111011011	2	-1	1111011011	-2	-1
(3E)	00111110	0111011110	2	-1	1111011110	-2	-1
(3F)	00111111	0111001010	2	-1	1111001010	-2	-1
(40)	01000000	0100010101	2	1	1100010101	-2	1
(41)	01000001	0100010111	2	-1	1100010111	-2	-1
(42)	01000010	0100011101	2	-1	1100011101	-2	-1
(43)	01000011	0100011111	2	1	1100011111	-2	1
(44)	01000100	0101010001	2	1	1101010001	-2	1
(45)	01000101	0101010011	2	-1	1101010011	-2	-1
(46)	01000110	0101010110	2	-1	1101010110	-2	-1
(47)	01000111	0100011010	2	1	1100011010	-2	1

© ISO/IEC 2000 – All rights reserved

Copyright International Organization for Standardization
Provided by IHS under license with ISO
No reproduction or networking permitted without license from IHS
Not for Resale

		Q' = -1			Q' = 1		
	8-bit byte	10-Channel bit pattern	DC	Q	10-Channel bit pattern	DC	Q
(48)	01001000	0100110101	2	-1	1100110101	-2	-1
(49)	01001001	0100110111	2	1	1100110111	-2	1
(4A)	01001010	0100111101	2	1	1100111101	-2	1
(4B)	01001011	0100111111	2	-1	1100111111	-2	-1
(4C)	01001100	0100101001	2	1	1100101001	-2	1
(4D)	01001101	0100101011	2	-1	1100101011	-2	-1
(4E)	01001110	0100101110	2	-1	1100101110	-2	-1
(4F)	01001111	0100111010	2	-1	1100111010	-2	-1
(50)	01010000	0100100101	0	-1	0100100101	0	1
(51)	01010001	0100100111	0	1	0100100111	0	-1
(52)	01010010	0100101101	0	1	0100101101	0	-1
(53)	01010011	0100101111	0	-1	0100101111	0	1
(54)	01010100	0100111001	0	1	0100111001	0	-1
(55)	01010101	0100111011	0	-1	0100111011	0	1
(56)	01010110	0100111110	0	-1	0100111110	0	1
(57)	01010111	0100101010	0	-1	0100101010	0	1
(58)	01011000	0110100101	0	1	0110100101	0	-1
(59)	01011001	0110100111	0	-1	0110100111	0	1
(5A)	01011010	0110101101	0	-1	0110101101	0	1
(5B)	01011011	0110101111	0	1	0110101111	0	-1
(5C)	01011100	0110111001	0	-1	0110111001	0	1
(5D)	01011101	0110111011	0	1	0110111011	0	-1
(5E)	01011110	0110111110	0	1	0110111110	0	-1
(5F)	01011111	0110101010	0	1	0110101010	0	-1

Copyright International Organization for Standardization
Provided by IHS under license with ISO
No reproduction or networking permitted without license from IHS
Not for Resale
© ISO/IEC 2000 – All rights reserved

		Q' = -1			Q' = 1		
	8-bit byte	10-Channel bit pattern	DC	Q	10-Channel bit pattern	DC	Q
(60)	01100000	0010010101	0	-1	0010010101	0	1
(61)	01100001	0010010111	0	1	0010010111	0	-1
(62)	01100010	0010011101	0	1	0010011101	0	-1
(63)	01100011	0010011111	0	-1	0010011111	0	1
(64)	01100100	1010010001	2	1	0010010001	-2	1
(65)	01100101	1010010011	2	-1	0010010011	-2	-1
(66)	01100110	1010010110	2	-1	0010010110	-2	-1
(67)	01100111	0010011010	0	-1	0010011010	0	1
(68)	01101000	0010110101	0	1	0010110101	0	-1
(69)	01101001	0010110111	0	-1	0010110111	0	1
(6A)	01101010	0010111101	0	-1	0010111101	0	1
(6B)	01101011	0010111111	0	1	0010111111	0	-1
(6C)	01101100	0010101001	0	-1	0010101001	0	1
(6D)	01101101	0010101011	0	1	0010101011	0	-1
(6E)	01101110	0010101110	0	1	0010101110	0	-1
(6F)	01101111	0010111010	0	1	0010111010	0	-1
(70)	01110000	0010010010	0	1	0010010010	0	-1
(71)	01110001	1011010010	2	-1	0011010010	-2	-1
(72)	01110010	1010010010	0	-1	1010010010	0	1
(73)	01110011	1010110010	0	1	1010110010	0	-1
(74)	01110100	0010110001	2	1	1010110001	-2	1
(75)	01110101	0010110011	2	-1	1010110011	-2	-1
(76)	01110110	0010011110	2	-1	1010011110	-2	-1
(77)	01110111	0010110010	0	-1	0010110010	0	1

© ISO/IEC 2000 – All rights reserved

Copyright International Organization for Standardization
Provided by IHS under license with ISO
No reproduction or networking permitted without license from IHS
Not for Resale

		Q' = -1			Q' = 1		
	8-bit byte	10-Channel bit pattern	DC	Q	10-Channel bit pattern	DC	Q
(78)	01111000	0011100101	0	1	0011100101	0	-1
(79)	01111001	0011100111	0	-1	0011100111	0	1
(7A)	01111010	0011101101	0	-1	0011101101	0	1
(7B)	01111011	0011101111	0	1	0011101111	0	-1
(7C)	01111100	0011111001	0	-1	0011111001	0	1
(7D)	01111101	0011111011	0	1	0011111011	0	-1
(7E)	01111110	0011111110	0	1	0011111110	0	-1
(7F)	01111111	0011101010	0	1	0011101010	0	-1
(80)	10000000	1010010101	0	1	1010010101	0	-1
(81)	10000001	1010010111	0	-1	1010010111	0	1
(82)	10000010	1010011101	0	-1	1010011101	0	1
(83)	10000011	1010011111	0	1	1010011111	0	-1
(84)	10000100	1010001001	0	-1	1010001001	0	1
(85)	10000101	1010001011	0	1	1010001011	0	-1
(86)	10000110	1010001110	0	1	1010001110	0	-1
(87)	10000111	1010011010	0	1	1010011010	0	-1
(88)	10001000	1010110101	0	-1	1010110101	0	1
(89)	10001001	1010110111	0	1	1010110111	0	-1
(8A)	10001010	1010111101	0	1	1010111101	0	-1
(8B)	10001011	1010111111	0	-1	1010111111	0	1
(8C)	10001100	1010101001	0	1	1010101001	0	-1
(8D)	10001101	1010101011	0	-1	1010101011	0	1
(8E)	10001110	1010101110	0	-1	1010101110	0	1
(8F)	10001111	1010111010	0	-1	1010111010	0	1

© ISO/IEC 2000 – All rights reserved
Copyright International Organization for Standardization
Provided by IHS under license with ISO
No reproduction or networking permitted without license from IHS
Not for Resale

		Q' = -1			Q' = 1		
	8-bit byte	10-Channel bit pattern	DC	Q	10-Channel bit pattern	DC	Q
(90)	10010000	1100100101	0	1	1100100101	0	-1
(91)	10010001	1100100111	0	-1	1100100111	0	1
(92)	10010010	1100101101	0	-1	1100101101	0	1
(93)	10010011	1100101111	0	1	1100101111	0	-1
(94)	10010100	1100111001	0	-1	1100111001	0	1
(95)	10010101	1100111011	0	1	1100111011	0	-1
(96)	10010110	1100111110	0	1	1100111110	0	-1
(97)	10010111	1100101010	0	1	1100101010	0	-1
(98)	10011000	1010100101	2	-1	0010100101	-2	-1
(99)	10011001	1010100111	2	1	0010100111	-2	1
(9A)	10011010	1010101101	2	1	0010101101	-2	1
(9B)	10011011	1010101111	2	-1	0010101111	-2	-1
(9C)	10011100	1010111001	2	1	0010111001	-2	1
(9D)	10011101	1010111011	2	-1	0010111011	-2	-1
(9E)	10011110	1010111110	2	-1	0010111110	-2	-1
(9F)	10011111	1010101010	2	-1	0010101010	-2	-1
(A0)	10100000	1011010101	2	1	0011010101	-2	1
(A1)	10100001	1011010111	2	-1	0011010111	-2	-1
(A2)	10100010	1011011101	2	-1	0011011101	-2	-1
(A3)	10100011	1011011111	2	1	0011011111	-2	1
(A4)	10100100	1011001001	2	-1	0011001001	-2	-1
(A5)	10100101	1011001011	2	1	0011001011	-2	1
(A6)	10100110	0111001110	0	-1	0111001110	0	1
(A7)	10100111	1011011010	2	1	0011011010	-2	1

© ISO/IEC 2000 – All rights reserved

Copyright International Organization for Standardization
Provided by IHS under license with ISO
No reproduction or networking permitted without license from IHS
Not for Resale

		Q' = -1			Q' = 1		
	8-bit byte	10-Channel bit pattern	DC	Q	10-Channel bit pattern	DC	Q
(A8)	10101000	1011110101	2	-1	0011110101	-2	-1
(A9)	10101001	1011110111	2	1	0011110111	-2	1
(AA)	10101010	1011111101	2	1	0011111101	-2	1
(AB)	10101011	1110110010	2	1	0110110010	-2	1
(AC)	10101100	1011101001	2	1	0011101001	-2	1
(AD)	10101101	1011101011	2	-1	0011101011	-2	-1
(AE)	10101110	1011101110	2	-1	0011101110	-2	-1
(AF)	10101111	1011111010	2	-1	0011111010	-2	-1
(B0)	10110000	1101110101	0	1	1101110101	0	-1
(B1)	10110001	1101110111	0	-1	1101110111	0	1
(B2)	10110010	1101111101	0	-1	1101111101	0	1
(B3)	10110011	1101111111	0	1	1101111111	0	-1
(B4)	10110100	1101101001	0	-1	1101101001	0	1
(B5)	10110101	1101101011	0	1	1101101011	0	-1
(B6)	10110110	1101101110	0	1	1101101110	0	-1
(B7)	10110111	1101111010	0	1	1101111010	0	-1
(B8)	10111000	1011100101	0	-1	1011100101	0	1
(B9)	10111001	1011100111	0	1	1011100111	0	-1
(BA)	10111010	1011101101	0	1	1011101101	0	-1
(BB)	10111011	1011101111	0	-1	1011101111	0	1
(BC)	10111100	1011111001	0	1	1011111001	0	-1
(BD)	10111101	1011111011	0	-1	1011111011	0	1
(BE)	10111110	1011111110	0	-1	1011111110	0	1
(BF)	10111111	1011101010	0	-1	1011101010	0	1

© ISO/IEC 2000 – All rights reserved
Copyright International Organization for Standardization
Provided by IHS under license with ISO
No reproduction or networking permitted without license from IHS
Not for Resale

		Q' = -1			Q' = 1		
	8-bit byte	**10-Channel bit pattern**	**DC**	**Q**	**10-Channel bit pattern**	**DC**	**Q**
(C0)	11000000	1110010101	2	1	0110010101	-2	1
(C1)	11000001	1110010111	2	-1	0110010111	-2	-1
(C2)	11000010	1110011101	2	-1	0110011101	-2	-1
(C3)	11000011	1110011111	2	1	0110011111	-2	1
(C4)	11000100	1110001001	2	-1	0110001001	-2	-1
(C5)	11000101	1100100011	2	-1	0100100011	-2	-1
(C6)	11000110	0111001011	0	-1	0111001011	0	1
(C7)	11000111	1110011010	2	1	0110011010	-2	1
(C8)	11001000	1110110101	2	-1	0110110101	-2	-1
(C9)	11001001	1110110111	2	1	0110110111	-2	1
(CA)	11001010	1110111101	2	1	0110111101	-2	1
(CB)	11001011	1110111111	2	-1	0110111111	-2	-1
(CC)	11001100	1110101001	2	1	0110101001	-2	1
(CD)	11001101	1110101011	2	-1	0110101011	-2	-1
(CE)	11001110	1110101110	2	-1	0110101110	-2	-1
(CF)	11001111	1110111010	2	-1	0110111010	-2	-1
(D0)	11010000	1101000101	2	-1	0101000101	-2	-1
(D1)	11010001	1101000111	2	1	0101000111	-2	1
(D2)	11010010	1101001101	2	1	0101001101	-2	1
(D3)	11010011	1101001111	2	-1	0101001111	-2	-1
(D4)	11010100	1101011001	2	1	0101011001	-2	1
(D5)	11010101	1101011011	2	-1	0101011011	-2	-1
(D6)	11010110	1101011110	2	-1	0101011110	-2	-1
(D7)	11010111	1101001010	2	-1	0101001010	-2	-1

© ISO/IEC 2000 – All rights reserved

Copyright International Organization for Standardization
Provided by IHS under license with ISO
No reproduction or networking permitted without license from IHS
Not for Resale

		Q' = -1			Q' = 1		
	8-bit byte	10-Channel bit pattern	DC	Q	10-Channel bit pattern	DC	Q
(D8)	11011000	1110100101	0	-1	1110100101	0	1
(D9)	11011001	1110100111	0	1	1110100111	0	-1
(DA)	11011010	1110101101	0	1	1110101101	0	-1
(DB)	11011011	1110101111	0	-1	1110101111	0	1
(DC)	11011100	1110111001	0	1	1110111001	0	-1
(DD)	11011101	1110111011	0	-1	1110111011	0	1
(DE)	11011110	1110111110	0	-1	1110111110	0	1
(DF)	11011111	1110101010	0	-1	1110101010	0	1
(E0)	11100000	1111010101	0	1	1111010101	0	-1
(E1)	11100001	1111010111	0	-1	1111010111	0	1
(E2)	11100010	1111011101	0	-1	1111011101	0	1
(E3)	11100011	1111011111	0	1	1111011111	0	-1
(E4)	11100100	1111001001	0	-1	1111001001	0	1
(E5)	11100101	1111001011	0	1	1111001011	0	-1
(E6)	11100110	1111001110	0	1	1111001110	0	-1
(E7)	11100111	1111011010	0	1	1111011010	0	-1
(E8)	11101000	1111110101	0	-1	1111110101	0	1
(E9)	11101001	1111110111	0	1	1111110111	0	-1
(EA)	11101010	1011110010	2	1	0011110010	-2	1
(EB)	11101011	0111001001	0	1	0111001001	0	-1
(EC)	11101100	1111101001	0	1	1111101001	0	-1
(ED)	11101101	1111101011	0	-1	1111101011	0	1
(EE)	11101110	1111101110	0	-1	1111101110	0	1
(EF)	11101111	1111111010	0	-1	1111111010	0	1

© ISO/IEC 2000 – All rights reserved
Copyright International Organization for Standardization
Provided by IHS under license with ISO
No reproduction or networking permitted without license from IHS
Not for Resale

		Q' = -1			Q' = 1		
	8-bit byte	**10-Channel bit pattern**	**DC**	**Q**	**10-Channel bit pattern**	**DC**	**Q**
(F0)	11110000	1101010101	0	-1	1101010101	0	1
(F1)	11110001	1101010111	0	1	1101010111	0	-1
(F2)	11110010	1101011101	0	1	1101011101	0	-1
(F3)	11110011	1101011111	0	-1	1101011111	0	1
(F4)	11110100	1101001001	0	1	1101001001	0	-1
(F5)	11110101	1101001011	0	-1	1101001011	0	1
(F6)	11110110	1101001110	0	-1	1101001110	0	1
(F7)	11110111	1101011010	0	-1	1101011010	0	1
(F8)	11111000	1111100101	2	-1	0111100101	-2	-1
(F9)	11111001	1111100111	2	1	0111100111	-2	1
(FA)	11111010	1111101101	2	1	0111101101	-2	1
(FB)	11111011	1111101111	2	-1	0111101111	-2	-1
(FC)	11111100	1111111001	2	1	0111111001	-2	1
(FD)	11111101	1111111011	2	-1	0111111011	-2	-1
(FE)	11111110	1100100110	2	-1	0100100110	-2	-1
(FF)	11111111	1111101010	2	-1	0111101010	-2	-1

© ISO/IEC 2000 – All rights reserved

Copyright International Organization for Standardization
Provided by IHS under license with ISO
No reproduction or networking permitted without license from IHS
Not for Resale

Annex E
(normative)

Measurement of bit shift

The tape to be measured shall have been written by the tape drive used for data interchange.

The tape shall have been written in any mode compatible with system operation.

E.1 Reading equipment

The tape shall be read on any drive which supports a track straightness meeting the requirement of annex F.

There are no absolute requirements placed on the output voltage of the head. However, the head design, the rotary transformer, the pre-amplifier, the head-to-tape speed and the equalizer shall be chosen so as to avoid problems due to a low signal-to-noise ratio.

— **Read head**

gap length	0,20 µm ± 0,05 µm
angle of the head gap	The gap in the head of positive azimuth shall make an angle of + 25° 0' 0" ± 0° 15' 0" with the axis of the scanner.

The gap in the head of negative azimuth shall make an angle of - 25° 0' 0" ± 0° 15' 0" with the axis of the scanner.

— **Head-tape contact and read channel**

The stability of the head-tape contact during the signal capture period (see E.2), together with the overall frequency response of the head, the rotary transformer, the pre-amplifier and the equalizer shall be sufficient to give a Signal-to-Noise ratio of better than 10 dB.

E.2 Measurement method

Bit shift shall be measured using computational signal processing of a digitized record of the playback voltage waveform at the equalizer output. The signal capture period shall start with the first bit of the Main Data Zone No. 1 (see 15.1) and finish when at least 25 000 Channel bits of the Main Data Zone have been read.

The signal processing algorithm shall perform the following steps

1) Input the digitized waveform from the Main Data Zone 1 into a timing extraction algorithm, e.g. a Fast Fourier Transform, which generates a series of fixed-interval time references for the nominal centres of the bit periods of the readback Channel bit signals from this zone. These references shall be sufficiently accurate that, when steps 2), 3) and 4) are executed, the bit error rate specified in 4) is achieved.

2) Extend this series of time references, at the same frequency and phase, into the remainder of the signal capture period. These references define the timing of the nominal centres of the bit periods of the readback Channel bit signals from the Main Data Zone 1.

3) Measure the playback voltage, to an accuracy of better than 2 %, at the nominal centre of each captured bit period from the Main Data Zone 1.

4) For each captured bit period from the Main Data Zone 1, deduce the state of the corresponding bit cell on the tape under test, by means of a detection method which has a bit error rate of less than 1 in 10 000. For each bit cell which is magnetized in the direction of head travel, assign to it a data value D of +1. For each bit cell which is magnetized in the direction opposite to head travel, assign to it a data value D of -1.

5) For each bit cell, form a vector of 4 elements. The elements shall be numbered 1, 2, 3 and 4. The value D_3 of the third element shall be the data value D of the current bit cell. The value D_4 of the fourth element shall be the data value D of the next bit cell. The values D_1 and D_2 respectively of the first and second elements shall be the data values D of the previous two bit cells. Thus, the vector has a vector value i which is one of a set of 16 possible vector values.

© ISO/IEC 2000 – All rights reserved
Copyright International Organization for Standardization
Provided by IHS under license with ISO
No reproduction or networking permitted without license from IHS
Not for Resale

6) For each of the 16 vector values, compute the average V_i of the playback voltages, measured in step 3), of all bit cells whose vectors have that vector value *i*.

7) Arrange the voltage averages and the data values to form 16 Volterra series, one per vector value. Each series shall be as defined below :

$$
\begin{aligned}
V_i \quad &= A_{0000} && \text{(d.c. term)}\\
&+ A_{0100}\,D_2 \;+\; A_{0010}\,D_3 && \text{(signal terms)}\\
&+ A_{1000}\,D_1 \;+\; A_{0001}\,D_4 && \text{(linear ISI terms)}\\
&+ A_{1100}\,D_1\,D_2 \;+\; A_{0110}\,D_2\,D_3 \;+\; A_{0011}\,D_3\,D_4 && \text{(non-linear ISI terms)}\\
&+ A_{1010}\,D_1\,D_3 \;+\; A_{0101}\,D_2\,D_4 \;+\; A_{1001}\,D_1\,D_4 && \text{(more non-linear ISI terms)}\\
&+ A_{1101}\,D_1\,D_2\,D_4 \;+\; A_{1011}\,D_1\,D_3\,D_4 \;+\; A_{1111}\,D_1\,D_2\,D_3\,D_4 && \text{(more non-linear ISI terms)}\\
&+ A_{1110}\,D_1\,D_2\,D_3 \;+ A_{0111}\,D_2\,D_3\,D_4 && \text{(non-linear ISI terms associated with bit shift)}
\end{aligned}
$$

8) Obtain the Volterra coefficients A_{0000} to A_{1111} by solving the 16 simultaneous equations formed in step 7).

9) The Volterra coefficients which indicate non-linear inter-symbol interference corresponding to bit shift are A_{1110} and A_{0111}.

NOTE

The theoretical basis for this method is described in

Newby, P. and Wood, R., 1986

"The Effects of Nonlinear Distortion on Class IV Partial Response"

IEEE Transactions on Magnetics

Volume MAG-22, Number 5, September 1986, Page 1203

and an application of this method is described in

Williams, C.H., 1990

"The Measurement and Classification of Impairment for DVTR Transports"

8th Conference on Video, Audio and Data Recording

IEE Conference Publication No. 319, page 67

© ISO/IEC 2000 – All rights reserved

Copyright International Organization for Standardization
Provided by IHS under license with ISO
No reproduction or networking permitted without license from IHS
Not for Resale

Annex F
(normative)

Method of measuring the straightness of track edges

F.1 Condition

The test piece shall be secured under a longitudinal tension between 0,04 N and 0,06 N.

F.2 Procedure

Define a rectangular box of 59,148 mm x 7,5 µm with its longitudinal axis at an angle α = 4,895 0° with the Tape Reference Edge and its centre on a line at a nominal distance of 4,454 5 mm from the Tape Reference Edge. Position this box over the leading edge of the track.

F.3 Requirement

Place the box, by varying its position only along the longitudinal axis of the tape, in such a position that the track's leading edge intersects its short sides only.

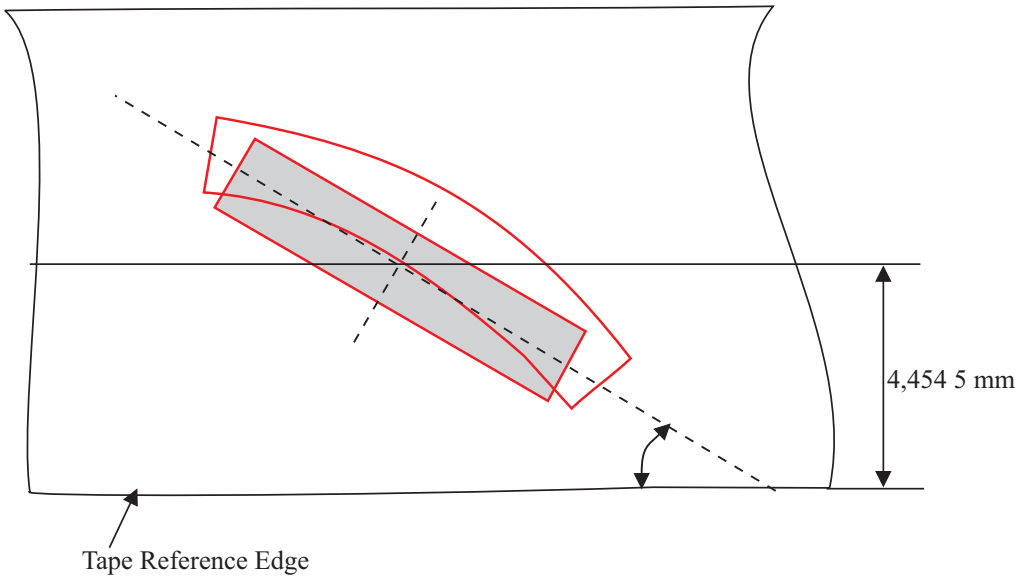

Figure F.1 - Track edge straightness

© ISO/IEC 2000 – All rights reserved
Copyright International Organization for Standardization
Provided by IHS under license with ISO
No reproduction or networking permitted without license from IHS
Not for Resale

Annex G
(normative)

ECC calculation

C1 shall be a GF(2^8) Reed-Solomon Code (64, 58, 7)

C2 shall be a GF(2^8) Reed-Solomon Code (56, 48, 9)

* C1 parity completes as 2-block with interleave by symbol.

The calculation on GF(2^8) is defined by the following polynomial:

$$G(x) = x^8 + x^4 + x^3 + x^2 + 1$$

$$\alpha = (00000010)$$

The interleave depth of C1 is two bytes, that of C2 is eight blocks. The ECC bytes shall satisfy

$$H_P \times V_P = 0$$

$$H_Q \times V_Q = 0$$

The generator polynomials shall be

$$G_P(x) = \prod_{i=0}^{i=5} (x - \alpha^i)$$

$$G_Q(x) = \prod_{i=0}^{i=7} (x - \alpha^i)$$

$$Hp = \begin{bmatrix} \alpha^0 & \alpha^0 & \alpha^0 & \alpha^0 & \cdots & \alpha^0 & \alpha^0 & \alpha^0 \\ \alpha^{63} & \alpha^{62} & \alpha^{61} & \alpha^{60} & \cdots & \alpha^2 & \alpha^1 & \alpha^0 \\ \alpha^{126} & \alpha^{124} & \alpha^{122} & \alpha^{120} & \cdots & \alpha^4 & \alpha^2 & \alpha^0 \\ \alpha^{189} & \alpha^{186} & \alpha^{183} & \alpha^{180} & \cdots & \alpha^6 & \alpha^3 & \alpha^0 \\ \alpha^{252} & \alpha^{248} & \alpha^{244} & \alpha^{240} & \cdots & \alpha^8 & \alpha^4 & \alpha^0 \\ \alpha^{315} & \alpha^{310} & \alpha^{305} & \alpha^{300} & \cdots & \alpha^{10} & \alpha^5 & \alpha^0 \end{bmatrix}$$

$$H_Q = \begin{bmatrix} \alpha^0 & \alpha^0 & \alpha^0 & \alpha^0 & \cdots & \alpha^0 & \alpha^0 & \alpha^0 \\ \alpha^{55} & \alpha^{54} & \alpha^{53} & \alpha^{52} & \cdots & \alpha^2 & \alpha^1 & \alpha^0 \\ \alpha^{110} & \alpha^{108} & \alpha^{106} & \alpha^{104} & \cdots & \alpha^4 & \alpha^2 & \alpha^0 \\ \alpha^{165} & \alpha^{162} & \alpha^{159} & \alpha^{156} & \cdots & \alpha^6 & \alpha^3 & \alpha^0 \\ \alpha^{220} & \alpha^{216} & \alpha^{212} & \alpha^{208} & \cdots & \alpha^8 & \alpha^4 & \alpha^0 \\ \alpha^{275} & \alpha^{270} & \alpha^{265} & \alpha^{260} & \cdots & \alpha^{10} & \alpha^5 & \alpha^0 \\ \alpha^{330} & \alpha^{324} & \alpha^{318} & \alpha^{312} & \cdots & \alpha^{12} & \alpha^6 & \alpha^0 \\ \alpha^{385} & \alpha^{378} & \alpha^{371} & \alpha^{364} & \cdots & \alpha^{14} & \alpha^7 & \alpha^0 \\ \alpha^{440} & \alpha^{432} & \alpha^{424} & \alpha^{416} & \cdots & \alpha^{16} & \alpha^8 & \alpha^0 \end{bmatrix}$$

© ISO/IEC 2000 – All rights reserved

Copyright International Organization for Standardization
Provided by IHS under license with ISO
No reproduction or networking permitted without license from IHS
Not for Resale

V_P =

D 2k,*l*
D 2k,*l*+2
D 2k,*l*+4
D 2k,*l*+6
D 2k,*l*+8
D 2k,*l*+10
D 2k,*l*+12
D 2k,*l*+14
D 2k,*l*+16
D 2k,*l*+18
D 2k,*l*+20
D 2k,*l*+22
D 2k,*l*+24
D 2k,*l*+26
D 2k,*l*+28
D 2k,*l*+30
D 2k,*l*+32
D 2k,*l*+34
D 2k,*l*+36
D 2k,*l*+38
D 2k,*l*+40
D 2k,*l*+42
D 2k,*l*+44
D 2k,*l*+46
D 2k,*l*+48
D 2k,*l*+50
D 2k,*l*+52
D 2k,*l*+54
D 2k,*l*+56
D 2k,*l*+58
D 2k,*l*+60
D 2k,*l*+62
D 2k+1,*l*
D 2k+1,*l*+2
D 2k+1,*l*+4
D 2k+1,*l*+6
D 2k+1,*l*+8
D 2k+1,*l*+10
D 2k+1,*l*+12
D 2k+1,*l*+14
D 2k+1,*l*+16
D 2k+1,*l*+18
D 2k+1,*l*+20
D 2k+1,*l*+22
D 2k+1,*l*+24
D 2k+1,*l*+26
D 2k+1,*l*+28
D 2k+1,*l*+30
D 2k+1,*l*+32
D 2k+1,*l*+34
D 2k+1,*l*+36
D 2k+1,*l*+38
D 2k+1,*l*+40
D 2k+1,*l*+42
D 2k+1,*l*+44
D 2k+1,*l*+46
D 2k+1,*l*+48
D 2k+1,*l*+50
P 2k+1,*l*+52
P 2k+1,*l*+54
P 2k+1,*l*+56
P 2k+1,*l*+58
P 2k+1,*l*+60
P 2k+1,*l*+62

V_Q =

Qm,n
Qm+8,n
Qm+16,n
Qm+24,n
Dm+32,n
Dm+40,n
Dm+48,n
Dm+56,n
Dm+64,n
Dm+72,n
Dm+80,n
Dm+88,n
Dm+96,n
Dm+104,n
Dm+112,n
Dm+120,n
Dm+128,n
Dm+136,n
Dm+144,n
Dm+152,n
Dm+160,n
Dm+168,n
Dm+176,n
Dm+184,n
Dm+192,n
Dm+200,n
Dm+208,n
Dm+216,n
Dm+224,n
Dm+232,n
Dm+240,n
Dm+248,n
Dm+256,n
Dm+264,n
Dm+272,n
Dm+280,n
Dm+288,n
Dm+296,n
Dm+304,n
Dm+312,n
Dm+320,n
Dm+328,n
Dm+336,n
Dm+344,n
Dm+352,n
Dm+360,n
Dm+368,n
Dm+376,n
Dm+384,n
Dm+392,n
Dm+400,n
Dm+408,n
Qm+416,n
Qm+424,n
Qm+432,n
Qm+440,n

--`,,```,,,,````-`-`,,`,,`,`,,`---

© ISO/IEC 2000 – All rights reserved
Copyright International Organization for Standardization
Provided by IHS under license with ISO
No reproduction or networking permitted without license from IHS
Not for Resale

where

P_{ij} = C1 bytes

Q_{ij} = C2 bytes

i = Block Number

j = Serial Number

For C1:

$k = 0,1, ..., 223$

$l = 0,1$

if k = 0 to 15, or 208 to 223 then D_{ij} in Vp is read as Q_{ij}

For C2:

$0 \leq m \leq 7$

$0 \leq n \leq 63$

Both sets of 64 bytes contained in each cell are identified by a Serial Number in the range 0 to 63 and constitute a Block identified by a Block Number.

© ISO/IEC 2000 – All rights reserved

Copyright International Organization for Standardization
Provided by IHS under license with ISO
No reproduction or networking permitted without license from IHS
Not for Resale

Annex H
(informative)

Recommendations for transportation

H.1 Environment

It is recommended that during transportation the cartridges are kept within the following conditions:

temperature	: - 40 °C to 45 °C
relative humidity	: 5 % to 80 %
wet bulb temperature	: 26 °C max.

There shall be no condensation in or on the cartridge.

H.2 Hazards

Transportation of recorded cartridges involves three basic potential hazards.

H.2.1 Impact loads and vibrations

The following recommendations should minimize damage during transportation.

a) Avoid mechanical loads that would distort the cartridge shape.

b) Avoid dropping the cartridge more than 1 m.

c) Cartridges should be fitted into a rigid box containing adequate shock-absorbent material.

d) The final box must have a clean interior and a construction that provides sealing to prevent the ingress of dirt and water.

e) The orientation of the cartridges within the final box should be such that the axes of the tape reels are horizontal.

f) The final box should be clearly marked to indicate its correct orientation.

H.2.2 Extremes of temperature and humidity

a) Extreme changes in temperature and humidity should be avoided whenever possible.

b) Whenever a cartridge is received it should be conditioned in the operating environment for a period of at least 24 h.

H.2.3 Effects of stray magnetic fields

A nominal spacing of not less than 80 mm should exist between the cartridge and the outer surface of the shipping container. This should minimize the risk of corruption.

© ISO/IEC 2000 – All rights reserved
Copyright International Organization for Standardization
Provided by IHS under license with ISO
No reproduction or networking permitted without license from IHS
Not for Resale

Annex J

(informative)

Read-After-Write

Read-After-Write (RAW) is a technique by which a Frame is read immediately after being written, examined to determine if it was written successfully, and re-written if not. The unit of RAW is a Frame. The RAW technique is applicable only in the Data Area of a tape, and is not applied to Amble Frames. Where RAW is applicable, it may be applied or not applied to individual Frames, regardless of whether or not it is applied to other Frames. When a Frame is identified, during a Read-After-Write check, as having been unsuccessfully written, it is rewritten further along the tape, i.e. the original Frame is not overwritten by the re-written Frame.

The primary intent of the RAW check is the detection of Frames containing errors of significant size and/or quantity, e.g. as caused by non-trivial media defects. Consequently, where RAW is applied it is not necessary that all Channel bits be read correctly to avoid a re-write. Instead, the minimum requirement needs to be only that the quality of the recording and the quantity of correctly decoded data is such that the data of the entire Frame is recoverable with sufficient margin for reliable data interchange.

The actual performance of a Frame against this requirement can be assessed in a number of ways, for example by measuring the length, severity and/or distribution of missing pulses, counting the number of errors detected by C1 and/or C2, comparing written and read checksums, comparing written and read data on a sampled or full time basis.

Where a Frame has been rewritten multiple instances of it will exist. It is possible that a subsequent read will successfully recover data from more than one instance of a Frame. In such case, it is recommended that the last successfully recovered instance be used, since previous ones may have been considered unsuccessfully written.

--`,,```,,,,````-`-`,,`,,`,`,,`---

© ISO/IEC 2000 – All rights reserved

Copyright International Organization for Standardization
Provided by IHS under license with ISO
No reproduction or networking permitted without license from IHS
Not for Resale

Annex K

(informative)

Example of the content of a Basic Group No. 0

All entries in byte position 1 to 400 are followed by (00) and the remainder of the field is padded with (00).

Byte Position	Field Identifier	Description of Contents
0 - 127	Name of Manufacturer	Name of the manufacturer of the drive that initialized or wrote the partition. ASCII string, null terminated and padded.
128 - 159	Model Number	Model number or identifier of the drive that initialized or wrote the partition. ASCII string, null terminated and padded.
160 - 191	Serial Number	Serial number assigned to the drive. ASCII string, null terminated and padded.
192 - 223	Revision Number	Revision numbers of drive components. 192-199 Sub-assembly 1 200-207 Sub-assembly 2 208-215 Sub-assembly 3 216-223 Sub-assembly 4 ASCII string, null terminated and padded.
224 - 255	Host Interface Type and Address	Type of host interface, e.g. SCSI and connection address. 224-239 Host Interface Type 240-255 Address ASCII string, null terminated and padded.
256 - 271	Date and Time YYMMDDHHMMSS	Date and time partition initialized or written. 256-257 YY *Year* = 1996 + *YY* 258-259 MM *Month* 260-261 DD *Day* 262-263 HH *Hour* 264-265 MM *Minutes* 266-267 SS *Seconds* ASCII string, null terminated and padded.
272 - 399	Tape Label or Identifier	An indicator of the partition's content. ASCII string, null terminated and padded.
400 - 22 271	Reserved	Reserved for future extension. All bytes set to the ASCII null character.
22 272 - 801 792	Vendor Unique	Undefined for interchange. Contents not specified.

--`,,```,,,,````-`-`,,`,,`,`,,`---

© ISO/IEC 2000 – All rights reserved

Copyright International Organization for Standardization
Provided by IHS under license with ISO
No reproduction or networking permitted without license from IHS

Not for Resale

Annex L
(informative)

Examples of MIC chip

This annex describes two commercially available chips that can be used with the cartridge specified by this International Standard, viz. Serial I^2C EEPROM ST24E16 and ST25E16. Complete technical information on these chips – inclusive signals description, device and read/write operations – is publicly available from STMicroelectronics on the Internet sites:

http://www.st.com
http://www.st.com/stonline/books/index.htm

With the latter site, “ST24E16 SERIAL EXTENDED ADDRESSING COMPATIBLE WITH I^2C 16K (2K×8) EEPROM” can be found in the part list after choosing “Serial EEPROM I^2C Bus category”.

Figure 1 of the description of these EEPROM describes the logical diagram. Figure L.1 below shows the allocation of signals to the Access Holes specified in 8.22.

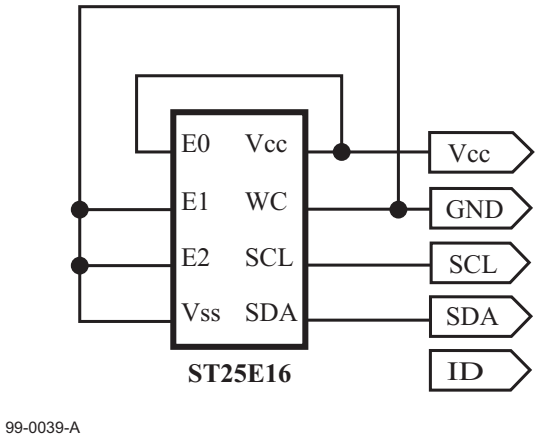

Figure L.1 – Correspondence between Access Holes and chip contacts

As shown in figure L.1, Access Hole ID is not used in this International Standard

The symbol "K" used in these sites is meant to indicate the decimal value 1024. Thus, the MIC chips mentioned in this annex have a capacity of 2 048 bytes.

© ISO/IEC 2000 – All rights reserved

Copyright International Organization for Standardization
Provided by IHS under license with ISO
No reproduction or networking permitted without license from IHS
Not for Resale

ICS 35.220.23

Price based on 105 pages

© ISO/IEC 2000 – All rights reserved

Copyright International Organization for Standardization
Provided by IHS under license with ISO
No reproduction or networking permitted without license from IHS

Not for Resale