INTERNATIONAL STANDARD

ISO/IEC 18093

First edition
1999-12-15

Information technology — Data interchange on 130 mm optical disk cartridges of type WORM (Write Once Read Many) using irreversible effects — Capacity: 5,2 Gbytes per cartridge

Technologies de l'information — Échange de données sur cartouches pour disques optiques de 130 mm *de diamètre de type WORM en utilisant des effets irréversibles — Capacité: 5,2 giga-octets par cartouche*

Reference number
ISO/IEC 18093:1999(E)

© ISO/IEC 1999

Copyright International Organization for Standardization
Provided by IHS under license with ISO
No reproduction or networking permitted without license from IHS

Not for Resale

PDF disclaimer

This PDF file may contain embedded typefaces. In accordance with Adobe's licensing policy, this file may be printed or viewed but shall not be edited unless the typefaces which are embedded are licensed to and installed on the computer performing the editing. In downloading this file, parties accept therein the responsibility of not infringing Adobe's licensing policy. The ISO Central Secretariat accepts no liability in this area.

Adobe is a trademark of Adobe Systems Incorporated.

Details of the software products used to create this PDF file can be found in the General Info relative to the file; the PDF-creation parameters were optimized for printing. Every care has been taken to ensure that the file is suitable for use by ISO member bodies. In the unlikely event that a problem relating to it is found, please inform the Central Secretariat at the address given below.

© ISO/IEC 1999

All rights reserved. Unless otherwise specified, no part of this publication may be reproduced or utilized in any form or by any means, electronic or mechanical, including photocopying and microfilm, without permission in writing from either ISO at the address below or ISO's member body in the country of the requester.

ISO copyright office
Case postale 56 • CH-1211 Geneva 20
Tel. + 41 22 749 01 11
Fax + 41 22 734 10 79
E-mail copyright@iso.ch
Web www.iso.ch

Printed in Switzerland

Copyright International Organization for Standardization
Provided by IHS under license with ISO
No reproduction or networking permitted without license from IHS
Not for Resale

© ISO/IEC 1999 – All rights reserved

Contents

Section 1 – General **1**

1 Scope **1**

2 Conformance **1**

2.1 Optical Disk Cartridge (ODC) **1**
2.2 Generating System **1**
2.3 Receiving System **1**
2.4 Compatibility statement **1**

3 Normative reference **1**

4 Terms and definitions **2**

4.1 asymmetry **2**
4.2 band **2**
4.3 case **2**
4.4 clamping zone **2**
4.5 control track **2**
4.6 Cyclic Redundancy Check (CRC) **2**
4.7 defect management **2**
4.8 direct overwrite **2**
4.9 disk reference plane **2**
4.10 entrance surface **2**
4.11 Error Correction Code (ECC) **2**
4.12 format **2**
4.13 hub **2**
4.14 interleaving **2**
4.15 Kerr rotation **2**
4.16 land and groove **2**
4.17 logical track **2**
4.18 mark **2**
4.19 mark edge **2**
4.20 mark edge recording **2**
4.21 optical disk **2**
4.22 optical disk cartridge (ODC) **2**
4.23 physical track **2**
4.24 polarization **2**
4.25 pre-recorded mark **2**
4.26 read power **2**
4.27 recording layer **2**
4.28 Reed-Solomon code **3**
4.29 space **3**
4.30 spindle **3**
4.31 substrate **3**
4.32 track pitch **3**
4.33 write-inhibit hole **3**
4.34 write-once functionality **3**
4.35 zone **3**

5 Conventions and notations **3**

5.1 Representation of numbers **3**
5.2 Names **3**

6 List of acronyms **3**

© ISO/IEC 1999 – All rights reserved

Copyright International Organization for Standardization
Provided by IHS under license with ISO
No reproduction or networking permitted without license from IHS
Not for Resale

7 General description of the optical disk cartridge **4**

8 General requirements **4**

8.1 Environments **4**

8.1.1 Test environment **4**
8.1.2 Operating environment **4**
8.1.3 Storage environment **5**
8.1.4 Transportation **5**

8.2 Temperature shock **5**
8.3 Safety requirements **5**
8.4 Flammability **5**

9 Reference Drive **5**

9.1 Optical system **5**
9.2 Optical beam **7**
9.3 Read Channels **7**
9.4 Tracking **7**
9.5 Rotation of the disk **7**

Section 2: Mechanical and physical characteristics **7**

10 Dimensional and physical characteristics of the case **7**

10.1 General description of the case **7**
10.2 Relationship of Sides A and B **8**
10.3 Reference axes and case reference planes **8**
10.4 Case drawings **8**
10.5 Dimensions of the case **8**

10.5.1 Overall dimensions **8**
10.5.2 Location hole **9**
10.5.3 Alignment hole **9**
10.5.4 Surfaces on Reference Planes P **10**
10.5.5 Insertion slots and detent features **11**
10.5.6 Gripper slots **11**
10.5.7 Write-inhibit holes **11**
10.5.8 Media sensor holes **12**
10.5.9 Head and motor window **13**
10.5.10 Shutter **13**
10.5.11 Slot for shutter opener **13**
10.5.12 Shutter sensor notch **14**
10.5.13 User label areas **14**

10.6 Mechanical characteristics **15**

10.6.1 Materials **15**
10.6.2 Mass **15**
10.6.3 Edge distortion **15**
10.6.4 Compliance **15**
10.6.5 Shutter opening force **15**

10.7 Drop test **15**

11 Dimensional, mechanical and physical characteristics of the disk **15**

11.1 General description of the disk **15**
11.2 Reference axis and plane of the disk **15**
11.3 Dimensions of the disk **15**

11.3.1 Hub dimension **16**

11.4 Mechanical characteristics **17**

11.4.1 Material **17**
11.4.2 Mass **17**

© ISO/IEC 1999 – All rights reserved
Copyright International Organization for Standardization
Provided by IHS under license with ISO
No reproduction or networking permitted without license from IHS
Not for Resale

11.4.3 Moment of inertia **17**
11.4.4 Imbalance **17**
11.4.5 Axial deflection **17**
11.4.6 Axial acceleration **17**
11.4.7 Radial runout **17**
11.4.8 Radial acceleration **18**
11.4.9 Tilt **18**

11.5 Optical characteristics **18**

11.5.1 Index of refraction **18**
11.5.2 Thickness **18**
11.5.3 Birefringence **18**
11.5.4 Vertical Birefringence **18**
11.5.5 Reflectance **18**

12 Interface between cartridge and drive **19**

12.1 Clamping method **19**
12.2 Clamping force **19**
12.3 Capture cylinder **19**
12.4 Disk position in the operating condition **19**

Section 3: Format of information **34**

13 Track geometry **34**

13.1 Track shape **34**
13.2 Direction of track spiral **34**
13.3 Track pitch **34**
13.4 Logical track number **34**
13.4 Physical track number **34**

14 Track format **34**

14.1 Physical track layout **34**
14.2 Logical track layout **34**
14.3 Radial alignment **35**
14.4 Sector number **35**

15 Sector format **35**

15.1 Sector layout **35**
15.2 Sector Mark **35**
15.3 VFO fields **36**
15.4 Address Mark (AM) **37**
15.5 ID fields **37**
15.6 Postamble (PA_1) **37**
15.7 Transition Area (TA_1) **38**
15.8 Gap **38**
15.9 Flag **38**
15.10 Auto Laser Power Control (ALPC) **38**
15.11 Sync **38**
15.12 Data field **38**

15.12.1 User data bytes **38**
15.12.2 CRC and ECC bytes **38**
15.12.3 Defect Management Pointer (DMP) **39**
15.12.4 Resync bytes **39**

15.13 Postamble field (PA_2) **39**
15.14 Buffer field **39**
15.15 Transition Area (TA2) **39**

16 Recording code **39**

© ISO/IEC 1999 – All rights reserved

Copyright International Organization for Standardization
Provided by IHS under license with ISO
No reproduction or networking permitted without license from IHS
Not for Resale

17 Formatted Zone **40**

17.1 General description of the Formatted Zone **40**
17.2 Division of the Formatted Zone **40**

17.2.1 Lead-in Zone **42**
17.2.2 Manufacturer Zones **42**
17.2.3 User Zone **43**
17.2.4 Reflective Zone **43**
17.2.5 Control Track Zones **43**

17.3 Control Track PEP Zone **43**

17.3.1 Recording in the PEP Zone **44**
17.3.2 Format of the tracks of the PEP Zone **44**

17.4 Control Track SFP Zones **48**

17.4.1 Duplicate of the PEP information **48**
17.4.2 Media information **48**
17.4.3 System Information **49**

18 Layout of the User Zone **50**

18.1 General description of the User Zone **50**
18.2 Divisions of the User Zone **50**

18.2.1 Reserved Area Use **51**

18.3 User Area **51**
18.4 Defect Management Areas (DMAs) **53**
18.5 Disk Structure Table (DST) **53**
18.6 Write Once Read Many (WORM) Zone **55**

18.6.1 Location **55**
18.6.2 Partitioning **55**

19 Defect Management **55**

19.1 Initialization of the disk **55**
19.2 Defect Management Pointers. **55**
19.3 Write procedure **56**

19.3.1 Read Procedure **56**

Section 4 - Characteristics of embossed information **56**

20 Method of testing **56**

20.1 Environment **56**
20.2 Use of the Reference Drive **56**

20.2.1 Optics and mechanics **56**
20.2.2 Read power **56**
20.2.3 Read channels **56**
20.2.4 Tracking **57**

20.3 Definition of signals **57**

21 Signal from grooves **59**

21.1 Cross-track signal **59**
21.2 Push-pull signal **59**
21.3 Divided push-pull signal **59**
21.4 Phase depth **60**
21.5 Track location **60**

22 Signals from Headers **60**

22.1 Sector Mark Signals **60**
22.2 VFO signals **60**

© ISO/IEC 1999 – All rights reserved
Copyright International Organization for Standardization
Provided by IHS under license with ISO
No reproduction or networking permitted without license from IHS
Not for Resale

22.3 Address Mark, ID and PA signals **60**
22.4 Timing jitter **61**
22.5 Asymmetry **61**

23 Signals from embossed Recording fields **61**

23.1 Signal amplitude **61**
23.2 Asymmetry **61**
23.3 Timing Jitter **61**
23.4 Byte Errors **61**

24 Signals from Control Track PEP marks **61**

Section 5 - Characteristics of the recording layer **62**

25 Method of testing **62**

25.1 Environment **62**
25.2 Reference Drive **62**

25.2.1 Optics and mechanics **62**
25.2.2 Read power **62**
25.2.3 Read Channel **63**
25.2.4 Tracking **63**
25.2.5 Signal detection for testing purposes **63**

25.3 Write conditions **63**

25.3.1 Write pulse and power **63**
25.3.2 Pulse power determination **64**
25.3.3 Media power sensitivity **64**

26 Write characteristics **64**

26.1 Resolution **64**
26.2 Narrow-band signal-to-noise ratio **65**
26.3 Cross-talk ratio **65**

26.3.1 Track test method **66**

26.4 Timing Jitter **66**

Section 6 - Characteristics of user data **66**

27 Method of testing **66**

27.1 Environment **66**
27.2 Reference Drive **66**

27.2.1 Optics and mechanics **66**
27.2.2 Read power **66**
27.2.3 Read amplifiers **66**
27.2.4 Mark Quality **66**
27.2.5 Channel bit clock **67**
27.2.6 Binary-to-digital converters **67**
27.2.7 Error correction **67**
27.2.8 Tracking **67**

28 Minimum quality of a sector **67**

28.1 Headers **67**

28.1.1 Sector Mark **67**
28.1.2 ID fields **67**

28.2 User-written data **67**

28.2.1 Recording field **67**
28.2.2 Byte errors **67**
28.2.3 Timing jitter **67**

-`,,```,,,,````-`-`,,`,,`,`,,`---
© ISO/IEC 1999 – All rights reserved
Copyright International Organization for Standardization
Provided by IHS under license with ISO
No reproduction or networking permitted without license from IHS
Not for Resale

29 Data interchange requirements **68**

29.1 Tracking **68**
29.2 User-written data **68**
29.3 Quality of disk **68**

Annexes **69**

A - Air cleanliness class 100 000 **69**

B - Edge distortion test **70**

C - Compliance test **72**

D - Test method for measuring the adsorbent force of the hub **74**

E - CRC for ID fields **76**

F - Interleave, CRC, ECC, Resync for the data field **77**

G - Determination of Resync pattern **81**

H - Read Channel for measuring jitter **86**

J - Timing jitter measuring procedure **87**

K - Definition of write pulse shape **88**

L - Requirements for interchange **89**

M - Measurement implementation for Cross-track signal **91**

N - Asymmetry measuring definition **92**

P - Office environment **93**

Q - Derivation of the operating climatic environment **94**

R - Transportation **99**

S - Sector retirement guidelines **100**

T - Track deviation measurement **101**

U - Values to be implemented in existing and future standards **105**

V - Measurement of the vertical birefringence of the substrate **106**

W - Guidelines for the use of WORM ODCs **108**

X - Laser power calibration for evaluation of media power sensitivity **109**

© ISO/IEC 1999 – All rights reserved
Copyright International Organization for Standardization
Provided by IHS under license with ISO
No reproduction or networking permitted without license from IHS
Not for Resale

Foreword

ISO (the International Organization for Standardization) and IEC (the International Electrotechnical Commission) form the specialized system for worldwide standardization. National bodies that are members of ISO or IEC participate in the development of International Standards through technical committees established by the respective organization to deal with particular fields of technical activity. ISO and IEC technical committees collaborate in fields of mutual interest. Other international organizations, governmental and non-governmental, in liaison with ISO and IEC, also take part in the work.

International Standards are drafted in accordance with the rules given in the ISO/IEC Directives, Part 3.

In the field of information technology, ISO and IEC have established a joint technical committee, ISO/IEC JTC 1. Draft International Standards adopted by the joint technical committee are circulated to national bodies for voting. Publication as an International Standard requires approval by at least 75 % of the national bodies casting a vote.

Attention is drawn to the possibility that some of the elements of this International Standard may be the subject of patent rights. ISO and IEC shall not be held responsible for identifying any or all such patent rights.

International Standard ISO/IEC 18093 was prepared by ECMA (as ECMA-280) and was adopted, under a special “fast-track procedure”, by Joint Technical Committee ISO/IEC JTC 1, *Information technology*, in parallel with its approval by national bodies of ISO and IEC.

Annexes A to N form a normative part of this International Standard. Annexes P to X are for information only.

© ISO/IEC 1999 – All rights reserved

Copyright International Organization for Standardization
Provided by IHS under license with ISO
No reproduction or networking permitted without license from IHS
Not for Resale

Information technology - Data interchange on 130 mm optical disk cartridges of type WORM (Write Once Read Many) using irreversible effects - Capacity: 5,2 Gbytes per cartridge

Section 1 – General

1 Scope

This International Standard specifies the characteristics of a 130 mm optical disk cartridge (ODC) of Type WORM (Write Once Read Many) with a capacity of 5,2 Gbytes. Type WORM ODCs use writing effects that are inherently irreversible. Written marks cannot be erased and attempted modification of the written marks are detectable.

This International Standard specifies

- the conditions for conformance testing and the Reference Drive;
- the environments in which the cartridges are to be operated and stored;
- the mechanical, physical and dimensional characteristics of the cartridge, so as to provide mechanical interchange ability between data processing systems;
- the format of the information on the disk, both embossed and user-written, including the physical disposition of the tracks and sectors, the error correction codes, the modulation methods used;
- the characteristics of the embossed information on the disk;
- the recording characteristics of the disk, enabling processing systems to write data onto the disk;
- the minimum quality of user-written data on the disk, enabling data processing systems to read data from the disk.

This International Standard provides for interchange between optical disk drives. Together with a standard for volume and file structure it provides for full data interchange between data processing systems.

2 Conformance

2.1 Optical Disk Cartridge (ODC)

An Optical Disk Cartridge shall be in conformance with this International Standard if it meets the mandatory requirements specified herein.

2.2 Generating System

A generating system shall be in conformance with this International Standard if the ODC it generates is in accordance with 2.1.

2.3 Receiving System

A receiving system shall be in conformance with this International Standard if it is able to handle an ODC according to 2.1

2.4 Compatibility statement

A claim of conformance by a generating or receiving system with this International Standard shall include a statement listing any other International Optical Disk Cartridge standard(s) supported by the system for which conformance is claimed. This statement shall specify the number of the standard(s), including, where appropriate, the ODC Type(s), or the Types of side, and whether support includes reading only or both reading and writing.

3 Normative reference

The following normative document contains provisions which, through reference in this text, constitute provisions of this International Standard. For dated references, subsequent amendments to, or revisions of, any of these publications do not apply. However, parties to agreements based on this International Standard are encouraged to investigate the possibility of applying the most recent edition of the normative document indicated below. For undated references, the latest edition of the normative document referred to applies. Members of ISO and IEC maintain registers of currently valid International Standards.

IEC 60950, *Safety of information technology equipment.*

© ISO/IEC 1999 – All rights reserved

Copyright International Organization for Standardization
Provided by IHS under license with ISO
No reproduction or networking permitted without license from IHS
Not for Resale

4 Terms and definitions

For the purposes of this International Standard, the following terms and definitions apply.

4.1 asymmetry: The deviation between the centre levels of the signals which give maximum and minimum amplitude.

4.2 band: An annular area within the user zone on the disk having a constant clock frequency.

4.3 case: The housing for an optical disk, that protects the disk and facilitates disk interchange.

4.4 clamping zone: An annular part of the disk within which the clamping force is applied by the clamping device.

4.5 control track: A track containing the information on media parameters and format necessary for writing, reading and erasing the remaining tracks on the optical disk.

4.6 Cyclic Redundancy Check (CRC): A method for detecting errors in data.

4.7 defect management: A method for handling the defective areas on the disk.

4.8 direct overwrite: A thermo-magnetic recording method using a specially designed media that does not require a separate erase pass.

4.9 disk reference plane: A plane defined by the perfectly flat annular surface of an ideal spindle onto which the clamping zone of the disk is clamped, and which is normal to the axis of rotation.

4.10 entrance surface: The surface of the disk on to which the optical beam first impinges.

4.11 Error Correction Code (ECC): An error-detecting code designed to correct certain kinds of errors in data.

4.12 format: The arrangement or layout of information on the disk**.**

4.13 hub: The central feature on the disk which interacts with the spindle of the disk drive to provide radial centring and the clamping force.

4.14 interleaving: The process of allocating the physical sequence of units of data so as to render the data more immune to burst errors.

4.15 Kerr rotation: The rotation of the plane of polarization of an optical beam upon reflection from the recording layer as caused by the magneto-optical Kerr effect.

4.16 land and groove: A trench-like feature of the disk, applied before the recording of any information, and used to define the track location. The groove is located nearer to the entrance surface than the land with which it is paired to form a track.

4.17 logical track: Either 31 consecutive sectors for 512-byte sector disks, 17 consecutive sectors for disks with 1 024-byte sector or 7 consecutive sectors for disks with 2 048-byte sectors in one or more physical tracks. The first sector of each logical track is assigned sector number 0.

4.18 mark: A feature of the recording layer which may take the form of a magnetic domain, a pit, or any other type or form that can be sensed by the optical system. The pattern of marks represents the data on the disk.

NOTE - Subdivisions of a sector which are named "mark" are not marks in the sense of this definition

4.19 mark edge: The transition between a region with a mark and one without a mark or vice versa, along the track.

4.20 mark edge recording: A recording method which uses a mark edge to represent a Channel bit.

4.21 optical disk: A disk that will accept and retain information in the form of marks in a recording layer, that can be read with an optical beam.

4.22 optical disk cartridge (ODC): A device consisting of a case containing an optical disk.

4.23 physical track: The path which is followed by the focus of the optical beam during one revolution of the disk. This path is not directly addressable.

4.24 polarization: The direction of polarization of an optical beam is the direction of the electric vector of the beam.

NOTE - The plane of polarization is the plane containing the electric vector and the direction of propagation of the beam. The polarization is right-handed when to an observer looking in the direction of propagation of the beam, the end-point of the electric vector would appear to describe an ellipse in the clockwise sense.

4.25 pre-recorded mark: A mark so formed as to be unalterable by magneto-optical means.

4.26 read power: The read power is the optical power, incident at the entrance surface of the disk, used when reading.

NOTE - It is specified as a maximum power that may be used without damage to the written data. Lower power may be used providing that the signal-to-noise ratio and other requirements of this International Standard are met.

4.27 recording layer: A layer of the disk on, or in, which data is written during manufacture and/or use.

© ISO/IEC 1999 – All rights reserved
Copyright International Organization for Standardization
Provided by IHS under license with ISO
No reproduction or networking permitted without license from IHS
Not for Resale

4.28 Reed-Solomon code: An error detection and/or correction code which is particularly suited to the correction of errors which occur in bursts or are strongly correlated.

4.29 space: The area between marks along the track.

4.30 spindle: The part of the disk drive which contacts the disk and/or hub.

4.31 substrate: A transparent layer of the disk, provided for mechanical support of the recording layer, through which the optical beam accesses the recording layer.

4.32 track pitch: The distance between adjacent track centrelines, measured in a radial direction.

4.33 write-inhibit hole: A hole in the case which, when detected by the drive to be open, inhibits both write and erase operations.

4.34 write-once functionality: A technique whereby a rewritable MO ODC is restricted to initialization and writing once only; erase is not permitted.

4.35 zone: An annular area of the disk.

5 Conventions and notations

5.1 Representation of numbers

– A measured value is rounded off to the least significant digit of the corresponding specified value. It implies that a specified value of 1,26 with a positive tolerance of +0,01, and a negative tolerance of -0,02 allows a range of measured values from 1,235 to 1,275.

– Letters and digits in parentheses represent numbers in hexadecimal notation.

– The setting of a bit is denoted by ZERO or ONE.

– Numbers in binary notation and bit combinations are represented by strings of ZEROs and ONEs.

– Numbers in binary notation and bit combinations are shown with the most significant bit to the left.

– Negative values of numbers in binary notation are given in TWO's complement.

– In each field the data is recorded so that the most significant byte (byte 0) is recorded first. Within each byte the least significant bit is numbered 0 and is recorded last, the most significant bit (numbered 7 in an 8-bit byte) is recorded first. This order of recording applies also to the data input of the Error Detection and Correction circuits and their output.

– Unless otherwise stated, groups of decimal digits of the form xx ... x/yy ... y/zz ... z indicate that the value xx ... x applies to 2 048-byte sectors, yy ... y applies to 1 024-byte sectors and that the value zz ... z applies to 512-byte sectors.

5.2 Names

The names of entities, e.g. specific tracks, fields, etc., are given with a capital initial.

6 List of acronyms

ALPC	Auto Laser Power Control
AM	Address Mark
CRC	Cyclic Redundancy Code
DDS	Disk Definition Structure
DMA	Defect Management Area
DMP	Defect Management Pointers
DOW	Direct Overwrite
ECC	Error Correction Code
EDAC	Error Detection And Correction
ID	Identifier
LBA	Logical Block Address
LSB	Least Significant Byte
MO	Magneto-Optical
MSB	Most Significant Byte
ODC	Optical Disk Cartridge
O-ROM	Optical Read Only Memory
PA	Postamble
PDL	Primary Defect List
PEP	Phase-Encoded Part of the Control Tracks

--`,,```,,,,````-`-`,,`,,`,`,,`---

© ISO/IEC 1999 – All rights reserved

Copyright International Organization for Standardization
Provided by IHS under license with ISO
No reproduction or networking permitted without license from IHS
Not for Resale

P-DOW	Partial ROM Direct Overwrite
P-ROM	Partial Read Only Memory
RLL(1,7)	Run Length Limited (code)
R-S	Reed-Solomon (code)
R/W	Rewritable
R-S/LDC	Reed-Solomon Long Distance Code
SCSI	Small Computer System Interface
SDL	Secondary Defect List
SFP	Standard Formatted Part of the Control Tracks
SM	Sector Mark
SWF	Sector Written Flag
TA	Transition Area
TIA	Time Interval Analyzer
VFO	Variable Frequency Oscillator
WO	Write Once
WO-DOW	Write Once Direct Overwrite
ZCAV	Zoned Constant Angular Velocity

7 General description of the optical disk cartridge

The optical disk cartridge which is the subject of this International Standard consists of a case containing an optical disk.

The case is a protective enclosure for the disk. It has access windows covered by a shutter. The windows are automatically uncovered by the drive when the cartridge is inserted into it.

The optical disk consists of two sides assembled together with their recording layers on the inside.

The optical disk is recordable on both sides. Data is written onto the disk with a focused optical beam as marks in the recording layer using irreversible effects, such that the marks cannot be erased or transformed back into an unrecorded state. The marks can be formed by either a phase transformation process, an ablative process, alloy mode, or any other irreversible process. The data are read by detecting the intensity modulation of the reflected beam caused by the difference of reflectivity of the recorded marks and the unrecorded regions. The beam accesses the recording layer through the transparent substrate of the disk.

8 General requirements

8.1 Environments

8.1.1 Test environment

The test environment is the environment where the air immediately surrounding the optical disk cartridge has the following properties:

temperature: 23 °C ± 2 °C

relative humidity: 45 % to 55 %

atmospheric pressure: 60 kPa to 106 kPa

air cleanliness: Class 100 000 (see annex A)

No condensation on or in the optical disk cartridge shall occur. Before testing, the optical disk cartridge shall be conditioned in this environment for 48 h minimum. It is recommended that, before testing, the entrance surface of the disk be cleaned according to the instructions of the manufacturer of the disk.

Unless otherwise stated, all tests and measurements shall be made in this test environment.

8.1.2 Operating environment

This International Standard requires that an optical disk cartridge which meets all requirements of this Standard in the specified test environment provides data interchange over the specified ranges of environmental parameters in the operating environment. (See also annex R.)

The operating environment is the environment where the air immediately surrounding the optical disk cartridge has the following properties:

temperature: 5 °C to 55 °C

relative humidity: 3 % to 85 %

--`,,```,,,,````-`-`,,`,,`,`,,`---
© ISO/IEC 1999 – All rights reserved
Copyright International Organization for Standardization
Provided by IHS under license with ISO
No reproduction or networking permitted without license from IHS
Not for Resale

absolute humidity: 1 g/m^3 to 30 g/m^3

atmospheric pressure: 60 kPa to 106 kPa

temperature gradient: 10 °C/h max.

relative humidity gradient: 10 %/h max.

air cleanliness: office environment (see also annex R.1)

No condensation on or in the optical disk cartridge shall occur. If an optical disk cartridge has been exposed to conditions outside those specified in this clause, it shall be acclimatized in an allowed operating environment for at least 2 hours before use. (See also annex S).

8.1.3 Storage environment

The optical disk cartridge without any protective enclosure shall not be stored in an environment outside the range allowed for storage. The storage environment is defined as an environment where the air immediately surrounding the optical disk cartridge has the following properties:

temperature: -10 °C to 55 °C

relative humidity: 3 % to 90 %

absolute humidity: 1 g/m^3 to 30 g/m^3

atmospheric pressure: 60 kPa to 106 kPa

temperature gradient: 15 °C/h max.

relative humidity gradient: 10 %/h max.

air cleanliness: office environment (see also annex R.1)

No condensation on or in the optical disk cartridge shall occur.

8.1.4 Transportation

This International Standard does not specify requirements for transportation; guidance is given in annex T.

8.2 Temperature shock

The optical disk cartridge shall withstand a temperature shock of up to 20 °C when inserted into, or removed from, the drive.

8.3 Safety requirements

The cartridge shall satisfy the safety requirements of IEC 60950, when used in the intended manner or in any foreseeable use in an information processing system.

8.4 Flammability

The cartridge and its components shall be made from materials that comply with the flammability class for HB materials, or better, as specified in IEC 60950.

9 Reference Drive

The Reference Drive is a drive several critical components of which have well defined properties and which is used to test the write and read parameters of the disk for conformance to this International Standard. The critical components vary from test to test. This clause gives an outline of all components; components critical for tests in specific clauses are specified in those clauses.

9.1 Optical system

The basic set-up of the optical system of the Reference Drive used for measuring the write and read parameters is shown in figure 1. Different components and locations of components are permitted, provided that the performance remains the same as that of the set-up in figure 1. The optical system shall be such that the detected light reflected from the entrance surface of the disk is minimized so as not to influence the accuracy of the measurements.

© ISO/IEC 1999 – All rights reserved

Copyright International Organization for Standardization
Provided by IHS under license with ISO
No reproduction or networking permitted without license from IHS
Not for Resale

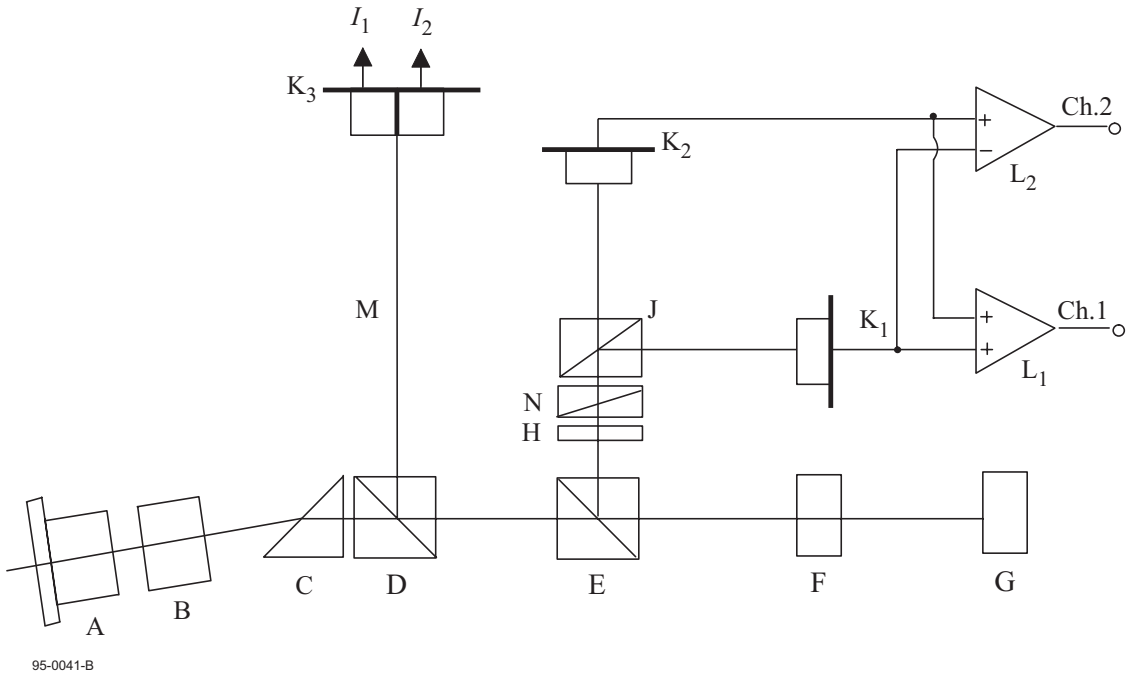

A	Laser diode	H	Optional half-wave plate
B	Collimator lens	I_1,I_2	Tracking signals from photodiode K3
C	Optional shaping prism	J	Polarizing beam splitter
Ch.1	Channel 1	K_1,K_2	Photodiodes for Channels 1 and 2
Ch.2	Channel 2	K_3	Split photodiode
D	Beam splitter	L_1,L_2	d.c.-coupled amplifiers
E	Polarizing beam splitter	M	Tracking Channel (see 20.3)
F	Objective lens	N	Phase retarder
G	Optical disk		

Figure 1 - Optical system of the Reference Drive

In the absence of polarization changes in the disk, the polarizing beam splitter J shall be aligned to make the signal of detector K_1 equal to that of detector K_2. The direction of polarization in this case is called the neutral direction. The phase retarder N shall be adjusted such that the optical system does not have more than 2,5° phase retardation between the neutral polarization and the polarization perpendicular to it. This position of the retarder is called the neutral position.

The phase retarder can be used for the measurement of the narrow-band signal-to-noise ratio (see 27.2).

The beam splitter J shall have a p-s intensity reflectance ratio of at least 100.

The beam splitter E shall have an intensity reflectance R_p from F to H of nominally 0,30 for the neutral polarization direction. The reflectance R_s for the polarization perpendicular to the neutral direction shall be nominally 0,95. The actual value of R_s shall not be smaller than 0,90.

The imbalance of the difference signal is specified for a beam splitter with nominal reflectance. If the measurement is made on a drive with reflectance's R'_p and R'_s for beam splitter E, then the measured imbalance shall be multiplied by

$$\sqrt{\frac{R_s R'_p}{R_p R'_s}}$$

to make it correspond to the nominal beam splitter E.

The output of Channel 1 is the sum of the currents through photodiodes K_1 and K_2, and is used for reading embossed marks and the user-written marks. The output of Channel 2 is the difference between photo-diode currents.

© ISO/IEC 1999 – All rights reserved
Copyright International Organization for Standardization
Provided by IHS under license with ISO
No reproduction or networking permitted without license from IHS
Not for Resale

9.2 Optical beam

The focused optical beam used for writing and reading data shall have the following properties:

a)	Wavelength (λ)	685 nm $^{+10\ nm}_{-10\ nm}$
b)	Wavelength (λ) divided by the numerical aperture of the objective lens (NA)	λ / NA = 1,245 μm ± 0,018 μm
c)	Filling D/W of the aperture of the objective lens	0,85 ± 0,05
d)	Variance of the wavefront of the optical beam near the recording layer	0 to λ2/ 330
e)	Polarization	Linear - parallel to the groove
f)	Extinction ratio	0,01 max.

g) The optical power and pulse width for writing and reading shall be as specified in later clauses of this International Standard.

D is the diameter of the lens aperture and W is the beam diameter of the Gaussian beam where the intensity is $1/e^2$ of the maximum intensity.

The extinction ratio is the ratio of the minimum over the maximum power observed behind a linear polarizer in the optical beam, which is rotated over at least 180°.

9.3 Read Channels

Channel 1 shall be provided to generate signals from the marks in the recording layer. Unless otherwise stated, the signal of Channel 1 is not equalized before detection. This Channel shall be used for reading the embossed marks using the diffraction of the optical beam by the marks, and shall be used for reading the written marks using the change in reflectivity of the marks. Channel 2 is used to obtain birefringence information of the disk from the signal imbalance of unwritten tracks. The read amplifiers after the photo-detectors in Channel 1 and Channel 2 shall have a flat response within 1 dB from d.c. to 37 MHz.

The signals from Channel 1 and 2 are not equalized before detection. The signals shall be low-pass filtered with a 3-pole Butterworth filter with a cut-off frequency of one half the Channel clock frequency.

9.4 Tracking

The Tracking Channel of the drive provides the tracking error signals to control the servos for the axial and radial tracking of the optical beam. The method of generating the axial tracking error is not specified for the Reference Drive. The radial tracking error is generated by a split photodiode detector in the tracking Channel. The division of the diode runs parallel to the image of the tracks on the diode.

The requirements for the accuracy with which the focus of the optical beam must follow the tracks is specified in 20.2.4.

9.5 Rotation of the disk

The spindle shall position the disk as specified in 12.4. It shall rotate the disk at 50,0 Hz ± 0,5 Hz. The direction of rotation shall be counterclockwise when viewed from the disk entrance surface of the disk side being tested.

Section 2: Mechanical and physical characteristics

10 Dimensional and physical characteristics of the case

10.1 General description of the case

The case (see figure 3) is a rigid protective container of rectangular shape. It has spindle windows on both sides to allow the spindle of the drive to clamp the disk by its hub. Both sides of the case have a head window, one for the optical head of the drive, the other for the magnetic head providing the necessary magnetic fields. A shutter uncovers the windows upon insertion into the drive, and automatically covers them upon removal from the drive. The case has write-inhibit, reflectance detection, and rotation direction detection features, and gripper slots for an autochanger.

--`,,```,,,,````-`-`,,`,,`,`,,`---

© ISO/IEC 1999 – All rights reserved
Copyright International Organization for Standardization
Provided by IHS under license with ISO
No reproduction or networking permitted without license from IHS
Not for Resale

10.2 Relationship of Sides A and B

The features essential for physical interchangeability are represented in figure 3. When Side A of the cartridge faces upwards, Side A of the disk faces downwards. Sides A and B of the case are identical as far as the features given here are concerned, except as noted below. The description is given for one side only. References to Sides A and B can be changed to B or A respectively.

Only the shutter and the slot for the shutter opener, described in 10.5.10 and 10.5.11, are not identical for both sides of the case.

10.3 Reference axes and case reference planes

There is a reference plane P for each side of the case. Each reference plane P contains two orthogonal axes X and Y to which the dimensions of the case are referred. The intersection of the X and Y axes defines the centre of the location hole. The X axis extends through the centre of the alignment hole.

10.4 Case drawings

The case is represented schematically by the following drawings.

- Figure 2 shows the hub dimensions.
- Figure 3 shows a composite drawing of Side A of the case in isometric form, with the major features identified from Side A.
- Figure 4 shows the envelope of the case with respect to a location hole at the intersection of the X and Y axes and reference plane P.
- Figure 5 shows the surfaces S1, S2, S3 and S4 which establish the reference plane P.
- Figure 5a shows the details of surface S3.
- Figure 6 shows the details of the insertion slot and detent.
- Figure 7 shows the gripper slots, used for automatic handling.
- Figure 8 shows the write-inhibit holes.
- Figure 9 shows the media ID sensor holes.
- Figure 10 shows the shutter sensor notch.
- Figure 11 shows the head and motor window.
- Figure 12 shows the shutter opening features.
- Figure 13 shows the capture cylinder.
- Figure 14 shows the user label areas.

10.5 Dimensions of the case

The dimensions of the case shall be measured in the test environment. The dimensions of the case in an operating environment can be estimated from the dimensions specified in this clause.

10.5.1 Overall dimensions

The total length of the case (see figure 4) shall be

$$L_1 = 153{,}0 \text{ mm} \pm 0{,}4 \text{ mm}$$

The distance from the top of the case to the reference axis X shall be

$$L_2 = 127{,}0 \text{ mm} \pm 0{,}3 \text{ mm}$$

The distance from the bottom of the case to the reference axis X shall be

$$L_3 = 26{,}0 \text{ mm} \pm 0{,}3 \text{ mm}$$

The total width of the case shall be

$$L_4 = 135{,}0 \text{ mm} \begin{matrix} +\,0{,}0 \text{ mm} \\ -\,0{,}6 \text{ mm} \end{matrix}$$

The distance from the left-hand side of the cartridge to the reference axis Y shall be

$$L_5 = 128{,}5 \text{ mm} \begin{matrix} +\,0{,}0 \text{ mm} \\ -\,0{,}5 \text{ mm} \end{matrix}$$

© ISO/IEC 1999 – All rights reserved
Copyright International Organization for Standardization
Provided by IHS under license with ISO
No reproduction or networking permitted without license from IHS
Not for Resale

The distance from the right-hand side of the cartridge to the reference axis Y shall be

L_6 = 6,5 mm ± 0,2 mm

The width shall be reduced on the top by the radius

R_1 = L4

originating from a point defined by L_5 and

L_7 = 101,0 mm ± 0,3 mm

The two corners of the top shall be rounded with a radius

R_2 = 1,5 mm ± 0,5 mm

and the two corners at the bottom with a radius

R_3 = 3,0 mm ± 1,0 mm

The thickness of the case shall be

L_8 = 11,00 mm ± 0,30 mm

The eight long edges of the case shall be rounded with a radius

R_4 = 1,0 mm max

10.5.2 Location hole

The centre of the location hole (see figure 4) shall coincide with the intersection of the reference axes X and Y. It shall have a square form with a side length of

$$L_9 = 4{,}10\ \text{mm}^{+\,0{,}00\ \text{mm}}_{-\,0{,}06\ \text{mm}}$$

held to a depth of

L_{10} = 1,5 mm (i.e. typical wall thickness)

after which a cavity extends through to the alignment hole on the opposite side of the case.

The lead-in edges shall be rounded with a radius

R_5 = 0,5 mm max

10.5.3 Alignment hole

The centre of the alignment hole (see figure 4) shall lie on reference axis X at a distance of

L_{11} = 122,0 mm ± 0,2 mm

from the reference axis Y.

The dimensions of the hole shall be

$$L_{12} = 4{,}10\ \text{mm}^{+\,0{,}00\ \text{mm}}_{-\,0{,}06\ \text{mm}}$$

and

$$L_{13} = 5{,}0\ \text{mm}^{+\,0{,}2\ \text{mm}}_{-\,0{,}0\ \text{mm}}$$

held to a depth of L_{10}, after which a cavity extends through to the location hole on the opposite side of the case.

The lead-in edges shall be rounded with radius R_5.

© ISO/IEC 1999 – All rights reserved

Copyright International Organization for Standardization
Provided by IHS under license with ISO
No reproduction or networking permitted without license from IHS
Not for Resale

10.5.4 Surfaces on Reference Planes P

The reference plane P (see figures 5 and 5a) for a side of the case shall contain four surfaces (S1, S2, S3 and S4) on that side of the case, specified as follows:

– Two circular surfaces S1 and S2.

Surface S1 shall be a circular area centred around the square location hole and have a diameter of

D_1 = 9,0 mm min

Surface S2 shall be a circular area centred around the rectangular alignment hole and have a diameter of

D_2 = 9,0 mm min

– Two elongated surfaces S3 and S4, that follow the contour of the cartridge and shutter edges.

Surfaces S3 and S4 are shaped symmetrically.

Surface S3 shall be defined by two circular sections with radii

R_6 = 1,5 mm ± 0,1 mm

with an origin given by

L_{14} = 4,0 mm ± 0,1 mm

L_{15} = 86,0 mm ± 0,3 mm

and

R_7 = 1,5 mm ± 0,1 mm

with an origin given by

L_{16} = 1,9 mm ± 0,1 mm

L_{17} = 124,5 mm ± 0,3 mm

The arc with radius R_7 shall continue on the right hand side with radius

$$R_8 = 134{,}0 \begin{matrix} +\,0{,}2\ \text{mm} \\ -\,0{,}7\ \text{mm} \end{matrix}$$

which is a dimension resulting from $L_5 + L_{14} + R_6$ with an origin given by L_5 and L_7. A straight, vertical line shall smoothly join the arc of R_6 to the arc of R_8.

The left-hand side of S3 shall be bounded by radius

R_9 = 4,5 mm ± 0,3 mm

which is a dimension resulting from $L_{18} + L_{14} - R_6$ with an origin given by

L_{18} = 2,0 mm ± 0,1 mm

L_{19} = 115,5 mm ± 0,3 mm

The left-hand side of the boundary shall be closed by two straight lines. The first one shall smoothly join the arc of R_6 to the arc of R_9. The second one shall run from the left hand tangent of R_7 to its intersection with R_9. Along the left hand side of surface S3 there shall be a zone to protect S3 from being damaged by the shutter. In order to keep this zone at a minimum practical width

R_{10} = 4,1 mm max

This radius originates from the same point as R_9.

© ISO/IEC 1999 – All rights reserved
Copyright International Organization for Standardization
Provided by IHS under license with ISO
No reproduction or networking permitted without license from IHS
Not for Resale

10.5.5 Insertion slots and detent features

The case shall have two symmetrical insertion slots with embedded detent features (see figure 6). The slots shall have a length of

L_{20} = 26,0 mm ± 0,3 mm

a width of

$L_{21} = 6{,}0\ ^{+\ 0{,}3\ \text{mm}}_{-\ 0{,}0\ \text{mm}}$

and a depth of

L_{22} = 3,0 mm ± 0,1 mm

located

L_{23} = 2,5 mm ± 0,2 mm

from reference plane P.

The slots shall have a lead-in chamfer given by

L_{24} = 0,5 mm max

L_{25} = 5,0 mm max

The detent notch shall be a semi-circle of radius

R_{11} = 3,0 mm ± 0,2 mm

with the origin given by

L_{26} = 13,0 mm ± 0,3 mm

L_{27} = 2,0 mm ± 0,1 mm

L_{73} = 114,0 mm ± 0,3 mm

The dimensions L_2, L_{26}, and L_{73} are interrelated, their values shall be such so that they are all three within specification.

10.5.6 Gripper slots

The case shall have two symmetrical gripper slots (see figure 7) with a depth of

L_{28} = 5,0 mm ± 0,3 mm

from the edge of the case and a width of

L_{29} = 6,0 mm ± 0,3 mm

The upper edge of a slot shall be

L_{30} = 12,0 mm ± 0,3 mm

above the bottom of the case.

10.5.7 Write-inhibit holes

Sides A and B shall each have a write-inhibit hole (see figure 8). The case shall include a device for opening and closing each hole. The hole at the left-hand side of Side A of the case, is the write-inhibit hole for Side A of the disk. The protected side of the disk shall be made clear by inscriptions on the case or by the fact that the device for Side A of the disk can only be operated from Side A of the case.

When writing and erasing on Side A of the disk is not allowed, the write-inhibit hole shall be open all through the case. It shall have a diameter

D_3 = 4,0 mm min

Its centre shall be specified by

L_{31} = 8,0 mm ± 0,2 mm

© ISO/IEC 1999 – All rights reserved

Copyright International Organization for Standardization
Provided by IHS under license with ISO
No reproduction or networking permitted without license from IHS
Not for Resale

L_{32} = 111,0 mm ± 0,3 mm

on Side A of the case.

When writing is allowed on Side A of the disk, the write-inhibit hole shall be closed on Side A of the case, at a depth of typically L_{10}, i.e. the wall thickness of the case. In this state, the opposite side of the same hole, at Side B of the case, shall be closed and not recessed from the reference plane P of Side B of the case by more than

L_{33} = 0,5 mm

The opposite side of the write-inhibit hole for protecting Side B of the disk shall have a diameter D_3. Its centre shall be specified by L_{31} and

L_{34} = 11,0 mm ± 0,2 mm

on Side A of the case.

10.5.8 Media sensor holes

There shall be two sets of four media sensor holes (see figure 9). The set of holes at the lower left hand corner of Side A of the case pertains to Side A of the disk. The holes shall extend through the case, and have a diameter of

$$D_4 = 4{,}0 \text{ mm} \begin{matrix} +\,0{,}3 \text{ mm} \\ -\,0{,}0 \text{ mm} \end{matrix}$$

the positions of their centres shall be specified by L_{32}, L_{34} and

L_{35} = 19,5 mm ± 0,2 mm

L_{36} = 17,0 mm ± 0,2 mm

L_{37} = 23,0 mm ± 0,2 mm

L_{38} = 29,0 mm ± 0,2 mm

L_{39} = 93,0 mm ± 0,3 mm

L_{40} = 99,0 mm ± 0,3 mm

L_{41} = 105,0 mm ± 0,3 mm

A hole is deemed to be open when there is no obstruction in this hole over a diameter D_4 all through the case.

A hole for Side A of the disk is deemed to be closed, when the hole is closed on both Side A and Side B of the case. The closure shall be recessed from reference plane P by

L_{42} = 0,1 mm max

The holes are numbered consecutively from 1 to 4. Number 1 is the hole closest to the left hand edge of the case.

An optical disk cartridge conforming to this International Standard does not use holes No. 1, 3 and 4. These holes shall be closed. The meaning of the each hole shall be as in table 1.

Hole No. 2 shall indicate whether Side B shall not be used, in which case the hole shall be open. When Side B shall be used, the hole shall be closed.

Table 1 - Media sensor holes

Sensor hole No.	Indication	Closed	Open
1	Not used	Always	-
2	Disk side accessible	Yes	No
3	Not used	Always	-
4	Not used	Always	-

© ISO/IEC 1999 – All rights reserved
Copyright International Organization for Standardization
Provided by IHS under license with ISO
No reproduction or networking permitted without license from IHS
Not for Resale

10.5.9 Head and motor window

The case shall have a window on each side to enable the optical head and the motor to access the disk (see figure 11). The dimensions are referenced to a centreline, located at a distance of

L_{46} = 61,0 mm ± 0,2 mm

to the left of reference axis Y.

The width of the head access shall be

L_{47} = 20,00 mm min

L_{48} = 20,00 mm min

and its height shall extend from

L_{49} = 118,2 mm min to

L_{50} = 57,0 mm max

The four inside corners shall be rounded with a radius of

R_{12} = 3,0 mm max

The motor access shall have a diameter of

D_5 = 35,0 mm min

and its centre shall be defined by L_{46} and

L_{51} = 43,0 mm ± 0,2 mm

10.5.10 Shutter

The case shall have a spring-loaded, unidirectional shutter (see figure 12) with an optional latch, designed to completely cover the head and motor windows when closed. A shutter movement of 41,5 mm minimum shall be sufficient to ensure that the head and motor window is opened to the minimum size specified in 10.5.9. The shutter shall be free to slide in a recessed area of the case in such a way as to ensure that the overall thickness of the case and shutter shall not exceed L_8.

The right-hand side of the top of the shutter shall have a lead-in ramp with an angle

A_2 = 16° max

The distance from the reference planes P to the nearest side of the ramp shall be

L_{52} = 2,5 mm max

The left hand side of the shutter shall not extend closer than

L_{52B} = 14,0 mm min

to the datum plane.

10.5.11 Slot for shutter opener

The shutter shall have only one slot (see figure 12) in which the shutter opener of the drive can engage to open the shutter. The slot shall be dimensioned as follows:

When the shutter is closed, the vertical edge used to push the shutter open shall be located at a distance of

L_{53} = 34,5 mm ± 0,5 mm

from reference axis Y on Side B of the case.

The length of the slot shall be

L_{54} = 4,5 mm ± 0,1 mm

and the angle of the lead-out ramp shall be

A_3 = 52,5° ± 7,5°

© ISO/IEC 1999 – All rights reserved

Copyright International Organization for Standardization
Provided by IHS under license with ISO
No reproduction or networking permitted without license from IHS
Not for Resale

The depth of the slot shall be

L_{55} = 3,5 mm ± 0,1 mm

The width of the slot from the reference plane P of Side B of the case shall be

$L_{56} = 6{,}0\ \text{mm}\ {}^{+\ 0{,}5\ \text{mm}}_{-\ 0{,}0\ \text{mm}}$

If a shutter latch is employed, the distance between the latch and reference plane P of Side B of the case shall be

L_{57} = 2,5 mm max

The edges of the case beneath the shutter, upon which the shutter door opening mechanism may slide, shall have a thickness of

B_1 = 1,0 mm min

located at

B_2 = 0,9 mm max

from plane P (see detail A in figure 12).

The four edges shall also be straight to within

STR (straightness of surface) = 0,2 mm

in both planes for length C_1. (Length C_1 is defined by the manufacturer's shutter design. See detail in figure 12.)

10.5.12 Shutter sensor notch

The shutter sensor notch (see figure 10) is used to ensure that the shutter is fully open after insertion of the optical disk cartridge into the drive. Therefore, the notch shall be exposed only when the shutter is fully open.

The dimensions shall be

L_{43} = 3,5 mm ± 0,2 mm

L_{44} = 71,0 mm ± 0,3 mm

and

$L_{45} = 9{,}0\ \text{mm}\ {}^{+\ 0{,}0\ \text{mm}}_{-\ 2{,}0\ \text{mm}}$

The notch shall have a lead-out ramp with an angle

$A_1 = 45° \pm 2°$

10.5.13 User label areas

The case shall have the following minimum areas for user labels (see figure 14):

– on Side A and Side B: 35,0 mm x 65,0 mm
– on the bottom side: 6,0 mm x 98,0 mm

These areas shall be recessed by 0,2 mm min. Their positions are specified by the following dimensions and relations between dimensions.

L_{61} = 4,5 mm min

$L_{62} - L_{61}$ = 65,0 mm min

$L_{64} - L_{63}$ = 35,0 mm min

L_{65} = 4,5 mm min

$L_{66} - L_{65}$ = 65,0 mm min

$L_{67} + L_{68}$ = 35,0 mm min

--`,,```,,,,````-`-`,,`,,`,`,,`---

© ISO/IEC 1999 – All rights reserved
Copyright International Organization for Standardization
Provided by IHS under license with ISO
No reproduction or networking permitted without license from IHS
Not for Resale

$L_8 - L_{71} - L_{72}$ = 6,0 mm min

$L_4 - L_{69} - L_{70}$ = 98,0 mm min

10.6 Mechanical characteristics

All requirements of this clause shall be met in the operating environment.

10.6.1 Materials

The case shall be constructed from any suitable materials such that it meets the requirements of this International Standard.

10.6.2 Mass

The mass of the case without the optical disk shall not exceed 150 g.

10.6.3 Edge distortion

The cartridge shall meet the requirement of the edge distortion test defined in annex B.

10.6.4 Compliance

The cartridge shall meet the requirement of the compliance (flexibility) test defined in annex C. The requirement guarantees that a cartridge can be constrained in the proper plane of operation within the drive.

10.6.5 Shutter opening force

The spring force on the shutter shall be such that the force required to open the shutter does not exceed 3N.

It shall be sufficiently strong to close a free-sliding shutter, irrespective of the orientation of the case.

10.7 Drop test

The optical disk cartridge shall withstand dropping on each surface and on each corner from a height of 760 mm on to a concrete floor covered with a vinyl layer 2 mm thick. The cartridge shall withstand all such impacts without any functional failure.

11 Dimensional, mechanical and physical characteristics of the disk

11.1 General description of the disk

The disk shall consist of two sides.

Each disk side shall consist of a circular substrate with a hub on one face and a recording layer coated on the other face. The recording layer can be protected from environmental influences by a protective layer. The Formatted Zone (see clause 17) of the substrate shall be transparent to allow an optical beam to focus on the recording layer through the substrate.

The two disk sides shall be assembled with the recording layer facing inwards.

The circular hubs are in the centre of the disk. They interact with the spindle of the drive, and provide the radial centring of the clamping force.

11.2 Reference axis and plane of the disk

Some dimensions of the hub are referred to a Disk Reference Plane P (see figure 2). The Disk Reference Plane P is different from that described in 10.3 for the cartridge. P is defined by the perfectly flat annular surface of an ideal spindle onto which the clamping zone of the disk is clamped, and which is normal to the axis of rotation of this spindle.This axis A passes through the centre of the centre hole of the hub, and is normal to Disk Reference Plane P.

11.3 Dimensions of the disk

The dimensions of the disk shall be measured in the test environment. The dimensions of the disk in an operating environment can be estimated from the dimensions specified in this clause.

The outer diameter of the disk shall be 130,0 mm nominal. The tolerance is determined by the movement of the disk inside the case allowed by 12.3 and 12.4.

The total thickness of the disk outside the hub area shall be 2,40 mm min. and 2,80 mm max.

NOTE - Disks that conform to ISO/IEC 10089 and ECMA-238 (ISO/IEC 15486) are known to exist which have a total thickness of 3,2 mm.

The clamping zone is the area on the disk where the clamping mechanism of the optical drive grips the disk and is defined by D_6 and D_7.

© ISO/IEC 1999 – All rights reserved
Copyright International Organization for Standardization
Provided by IHS under license with ISO
No reproduction or networking permitted without license from IHS
Not for Resale

The clearance zone is the area between the outer diameter of the clamping zone (D_6) and the inner diameter of the reflective zone (see clause 17).

The clearance zone shall be excluded from the total thickness requirement, however there shall be no projection from the Disk Reference Plane P in the direction of the optical system of more than 0,2 mm in this zone.

11.3.1 Hub dimension

The outer diameter of the hub (see figure 2) shall be

$$D_8 = 25{,}0 \text{ mm} \begin{matrix} +\ 0{,}0 \text{ mm} \\ -\ 0{,}2 \text{ mm} \end{matrix}$$

The height of the hub shall be

$$h_1 = 2{,}2 \text{ mm} \begin{matrix} +\ 0{,}0 \text{ mm} \\ -\ 0{,}2 \text{ mm} \end{matrix}$$

The diameter of the centre hole of the hub shall be

$$D_9 = 4{,}004 \text{ mm} \begin{matrix} +\ 0{,}012 \text{ mm} \\ -\ 0{,}000 \text{ mm} \end{matrix}$$

The height of the top of the centring hole at diameter D_9, measured above the Disk Reference Plane P, shall be

$h_2 = 1{,}9$ mm min

The centring length at diameter D_9 shall be

$h_3 = 0{,}5$ mm min

The hole shall have a diameter larger than, or equal to, D_9 between the centring length and the Disk Reference Plane P. The hole shall extend through the substrate.

There shall be a radius at the rim of the hub at diameter D_9 with height

$h_4 = 0{,}2$ mm ± 0,1 mm

At the two surfaces which it intersects, the radius shall be blended to prevent offsets or sharp ridges.

The height of the chamfer at the rim of the hub at diameter D_8 shall be

$$h_5 = 0{,}2 \text{ mm} \begin{matrix} +\ 0{,}2 \text{ mm} \\ -\ 0{,}0 \text{ mm} \end{matrix}$$

The angle of the chamfer shall be 45°, or a corresponding full radius shall be used.

The outer diameter of the magnetizable ring shall be

$D_{10} = 19{,}0$ mm min

The inner diameter of the magnetizable ring shall be

$D_{11} = 8{,}0$ mm max

This thickness of the magnetizable material shall be

$h_6 = 0{,}5$ mm min

The position of the top of the magnetizable ring relative to the Disk Reference Plane P shall be

$$h_7 = 2{,}2 \text{ mm} \begin{matrix} +\ 0{,}0 \text{ mm} \\ -\ 0{,}1 \text{ mm} \end{matrix}$$

The outer diameter of the clamping zone shall be

$D_6 = 35{,}0$ mm min

© ISO/IEC 1999 – All rights reserved
Copyright International Organization for Standardization
Provided by IHS under license with ISO
No reproduction or networking permitted without license from IHS
Not for Resale

The inner diameter of the zone shall be

D_7 = 27,0 mm max

11.4 Mechanical characteristics

All requirements in this clause must be met in the operating environment.

11.4.1 Material

The disk shall be made from any suitable materials such that it meets the requirements of this Standard. The only material properties specified by this International Standard are the magnetic properties of the magnetizable zone in the hub (see 11.3.1) and the optical properties of the substrate in the Formatted Zone (see 11.5).

11.4.2 Mass

The mass of the disk shall not exceed 120 g.

11.4.3 Moment of inertia

The moment of inertia of the disk relative to axis A shall not exceed 0,22 g·m^2.

11.4.4 Imbalance

The imbalance of the disk relative to axis A shall not exceed 0,01 g·m.

11.4.5 Axial deflection

The axial deflection of the disk is measured as the axial deviation of the recording layer. Thus it comprises the tolerances on the thickness of the substrate, on its index of refraction and the deviation of the entrance surface from the Disk Reference Plane P on each side of the disk. The nominal position of the recording layer with respect to the Disk Reference Plane P on each side of the disk is determined by the nominal thickness of the substrate.

The deviation of any point of the recording layer from its nominal position, in a direction normal to the Disk Reference Plane P, shall not exceed ± 0,19 mm for rotational frequencies of the disk as specified in 9.5. The deviation shall be measured by the optical system defined in clause 9.

11.4.6 Axial acceleration

The maximum allowed axial error emax (see annex T) shall not exceed ± 0,7μm, measured using the Reference Servo for axial tracking of the recording layer. The rotational frequency of the disk shall be as specified in 9.5. The stationary part of the motor is assumed to be motionless (no external disturbances). The measurement shall be made using a servo with the transfer function

$$H_s(i\omega) = \frac{1}{3}\left(\frac{\omega_0}{i\omega}\right)^2 \frac{1+\frac{3i\omega}{\omega_0}}{1+\frac{i\omega}{3\omega_0}}$$

where

$\omega = 2\pi f$

$\omega_0/2\pi$ = 1 550 Hz

$i = \sqrt{-1}$

or any other servo with $|1+H|$ within 20% of $|1+H_S|$ in the bandwidth of 50 Hz to 170 kHz. Thus, the disk shall not require an acceleration of more than 22 m/s^2 at low frequencies from the servo motor of the Reference Servo.

11.4.7 Radial runout

The radial runout of the tracks in the recording layer in the Information zone is measured as seen by the optical head of the Reference Drive. Thus it includes the distance between the axis of rotation of the spindle and reference axis A, the tolerances on the dimensions between axis A and the location of the track, and effects of non-uniformity's in the index of refraction.

© ISO/IEC 1999 – All rights reserved

Copyright International Organization for Standardization
Provided by IHS under license with ISO
No reproduction or networking permitted without license from IHS
Not for Resale

The difference between the maximum and the minimum distance of any track from the axis of rotation, measured along a fixed radial line over one physical track of the disk, shall not exceed 50 μm as measured by the optical system under conditions of a hub mounted on a perfect sized test fixture shaft, for rotational frequencies of the disk as specified in 9.5.

11.4.8 Radial acceleration

The maximum allowed radial error emax (see annex V) shall not exceed ± 0,09μm, measured using the Reference Servo for radial tracking of the tracks. The rotational frequency of the disk shall be as specified in 9.5. The stationary part of the motor is assumed to be motionless (no external disturbances). The measurement shall be made using a servo with the transfer function

$$H_s(i\omega) = \frac{1}{3}\left(\frac{\omega_0}{i\omega}\right)^2 \frac{1+\frac{3i\omega}{\omega_0}}{1+\frac{i\omega}{3\omega_0}}$$

where

$\omega = 2\pi f$

$\omega_0 / 2\pi = 2\,340$ Hz

$I = \sqrt{-1}$

or any other servo with $|1+H|$ within 20% of $|1+H_s|$ in the bandwidth of 50 Hz to 170 kHz. Thus, the disk shall not require an acceleration of more than 6,5 m/s^2 at low frequencies from the servo motor of the Reference Servo.

11.4.9 Tilt

The tilt angle, defined as the angle which the normal to the entrance surface, averaged over a circular area of 1 mm diameter, makes with the normal to the Disk Reference Plane P, shall not exceed 2,8 mrad.

11.5 Optical characteristics

11.5.1 Index of refraction

Within the Formatted Zone (see clause 17) the index of refraction of the substrate shall be within the range from 1,46 to 1,60.

11.5.2 Thickness

The thickness of the substrate from the entrance surface to the recording layer, within the Formatted Zone shall be:

$$0{,}509\,3 \times \frac{n^3}{n^2 - 1} \times \frac{n^2 + 0{,}265\,0}{n^2 + 0{,}592\,9} \text{ mm} \pm 0{,}05 \text{ mm}$$

where n is the index of refraction.

11.5.3 Birefringence

The effect of the birefringence of the substrate is included in the measurement of the imbalance of the optical signal in Channel 2 of the Reference Drive (see 26.2)

11.5.4 Vertical Birefringence

The principal vertical birefringence value shall be contained as follows:

$$0 \le \left| N_p - N_z \right| \le 500 \times 10^{-6}$$

where N_p is the index of refraction along any direction in the plane of the disk and N_z is the index of refraction normal to the plane of the disk (see annex V).

11.5.5 Reflectance

11.5.5.1 General

The reflectance R is the value of the reflectance in-groove of an unrecorded and grooved area of the User Zone, measured through the substrate and does not include the reflectance of the entrance surface.

© ISO/IEC 1999 – All rights reserved
Copyright International Organization for Standardization
Provided by IHS under license with ISO
No reproduction or networking permitted without license from IHS
Not for Resale

The nominal value R of the reflectance shall be specified by the manufacturer

— in byte 3 of the Control Track PEP Zone (see 17.3.2.1.4), and
— in byte 19 of the Control Track SFP Zone (see 17.4.2).

11.5.5.2 Measured value

The measured value R_m of the reflectance shall be measured under the conditions a) to f) of 9.2 and those of 20.2.2 using the split photo detector $(I_1+I_2)_{IG}$.

Measurements shall be made in the User Zone in any track without embossed data fields.

11.5.5.3 Requirement

The value of R at the standard wavelength specified in 9.2 shall lie within the range of 0,05 to 0,16 for Type WORM disks.

At any point in the User Zone, the measured reflectance R_m shall meet the following requirement.

$$R\,(1 - 0{,}20) \leq (R_{mmax} + R_{mmin})/2 \leq R\,(1 + 0{,}20)$$

This requirement specifies the acceptable range for R_m, for all disks within the same value R. Additionally, the variation of R_m shall meet the requirement

$$(R_{mmax} - R_{mmin}) / (R_{mmax} + R_{mmin}) \leq 0{,}13$$

where

R_{mmax} is the maximum value of measured reflectance in the User Zone, and

R_{mmin} is the minimum value of measured reflectance in the User Zone.

12 Interface between cartridge and drive

12.1 Clamping method

When the cartridge is inserted into the drive, the shutter of the case is opened and the drive spindle engages the disk. The disk is held against the spindle by an axial clamping force, provided by the magnetizable material in the hub and the magnets in the spindle. The radial positioning of the disk is provided by the centering of the axis of the spindle in the centre hole of the hub. A turntable of the spindle shall support the disk in its clamping zone, determining the axial position of the disk in the case.

12.2 Clamping force

The clamping force exerted by the spindle shall be less than 14 N.

The adsorbent force measured by the test device specified in annex D shall be in the range of 8,0 N to 12,0 N.

12.3 Capture cylinder

The capture cylinder (see figure 13) is defined as the volume in which the spindle can expect the centre of the hole of the hub to be at the maximum height of the hub, just prior to capture. The size of the cylinder limits the allowable play of the disk inside its cavity in the case. This cylinder is referred to perfectly located and perfectly sized alignment and location pins in the drive, and includes tolerances of dimensions of the case and the disk between the two pins mentioned and the centre of the hub. The bottom of the cylinder is parallel to the Disk Reference Plane P, and shall be located at a distance of

$$L_{58} = 0{,}5 \text{ mm min.}$$

above the Disk Reference Plane P of Side B of the case when Side A of the disk is to be used. The top of the cylinder shall be located at a distance of

$$L_{59} = 4{,}3 \text{ mm max.}$$

above the same Disk Reference Plane P, i.e. that of Side B. The diameter of the cylinder shall be

$$D_{12} = 3{,}0 \text{ mm max.}$$

Its centre shall be defined by the nominal values of L_{46} and L_{51}.

12.4 Disk position in the operating condition

When the disk is in the operating condition (see figure 13) within the drive, the position of the active recording layer shall be

$$L_{60} = 5{,}35 \text{ mm} \pm 0{,}15 \text{ mm}$$

© ISO/IEC 1999 – All rights reserved
Copyright International Organization for Standardization
Provided by IHS under license with ISO
No reproduction or networking permitted without license from IHS
Not for Resale

above the Disk Reference Plane P of that side of the case that faces the optical system. Moreover, the torque to be exerted on the disk in order to maintain a rotational frequency of 50 Hz shall not exceed 0,01 N·m, when the axis of rotation is within a circle of diameter

D_{13} = 0,2 mm max.

and a centre given by the nominal values of L_{46} and L_{51}.

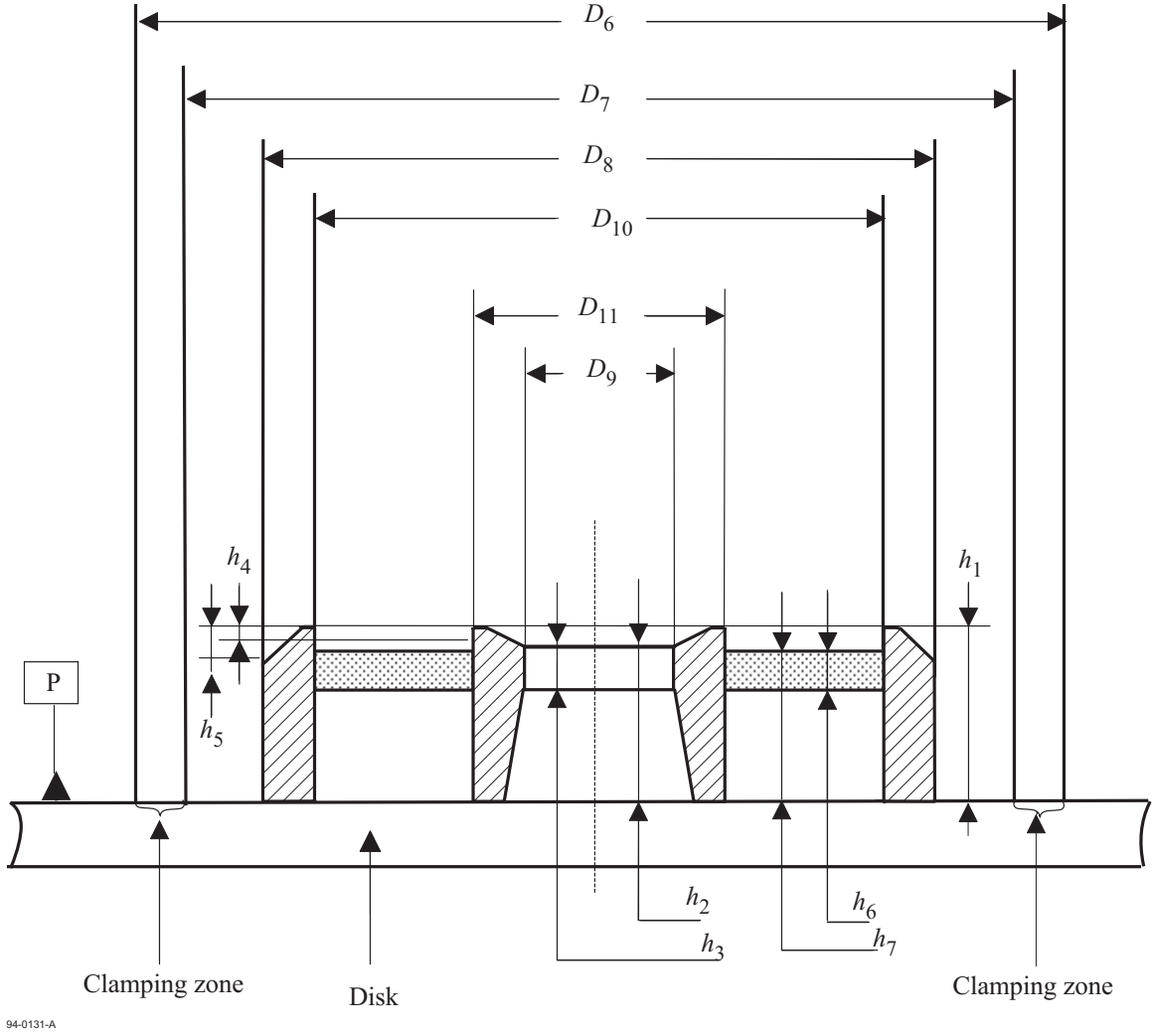

Figure 2 - Hub dimensions

© ISO/IEC 1999 – All rights reserved
Copyright International Organization for Standardization
Provided by IHS under license with ISO
No reproduction or networking permitted without license from IHS
Not for Resale

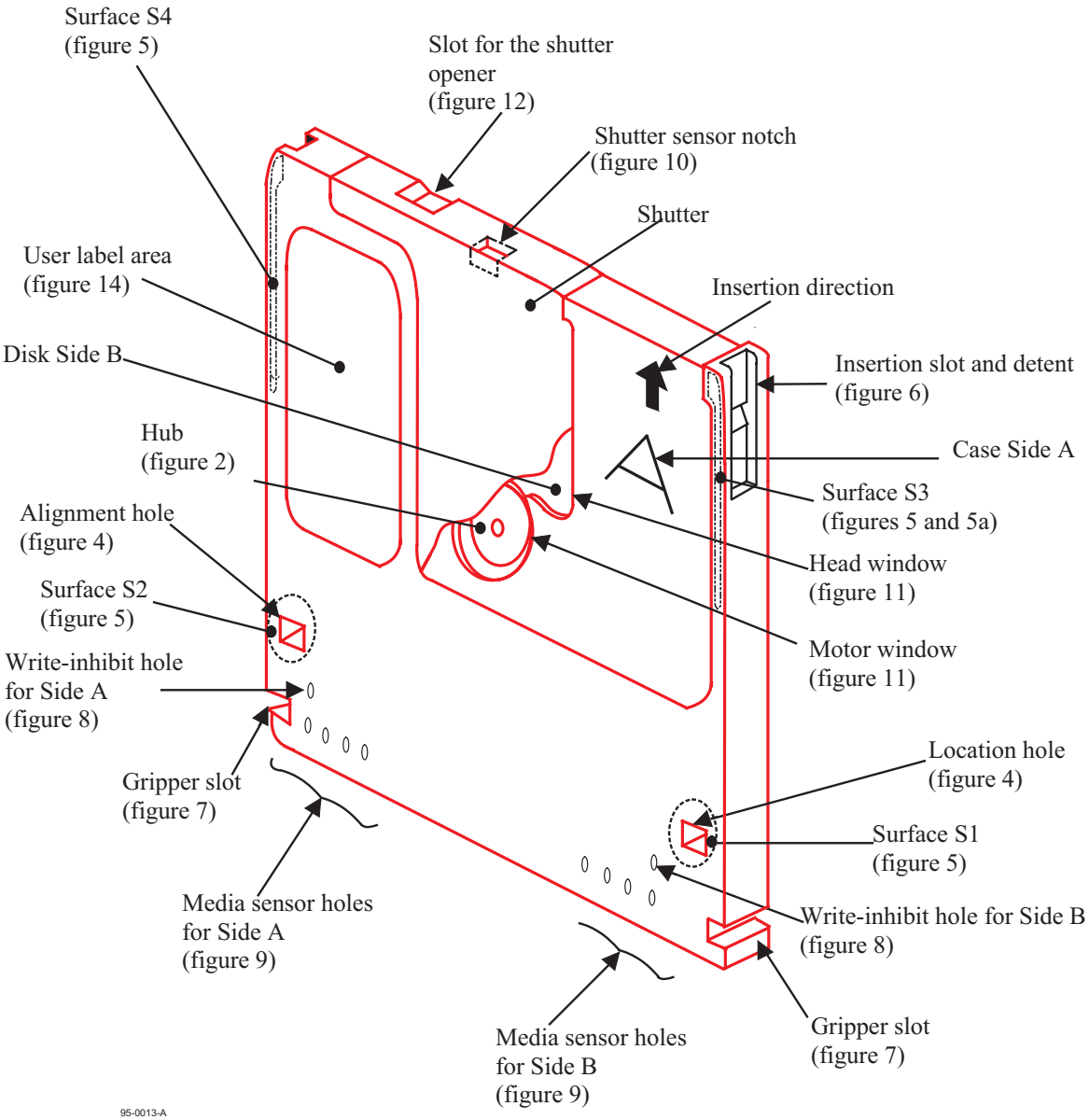

Figure 3 - Case

© ISO/IEC 1999 – All rights reserved
Copyright International Organization for Standardization
Provided by IHS under license with ISO
No reproduction or networking permitted without license from IHS
Not for Resale

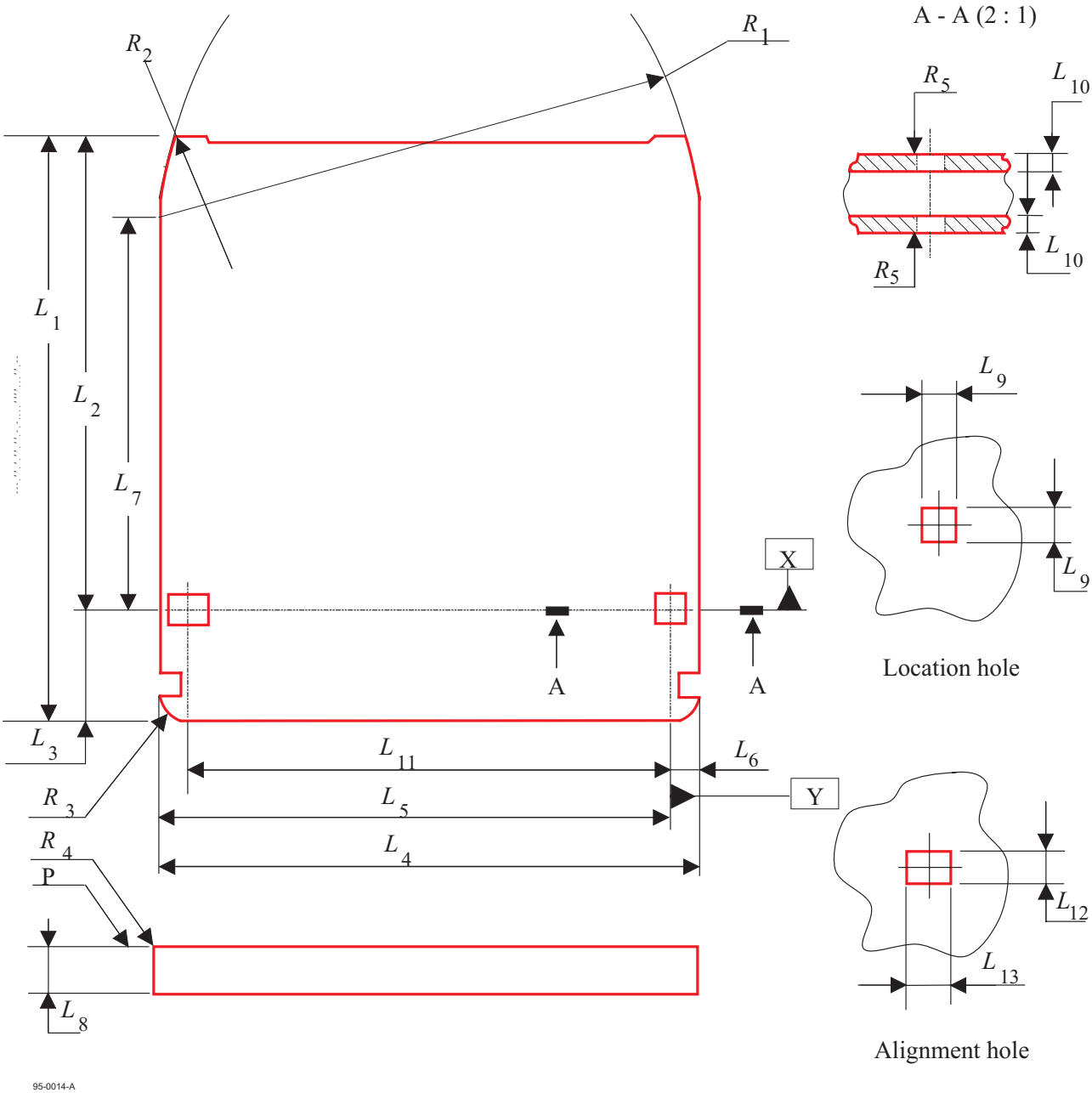

Figure 4 - Overall dimensions and reference axes

© ISO/IEC 1999 – All rights reserved
Copyright International Organization for Standardization
Provided by IHS under license with ISO
No reproduction or networking permitted without license from IHS
Not for Resale

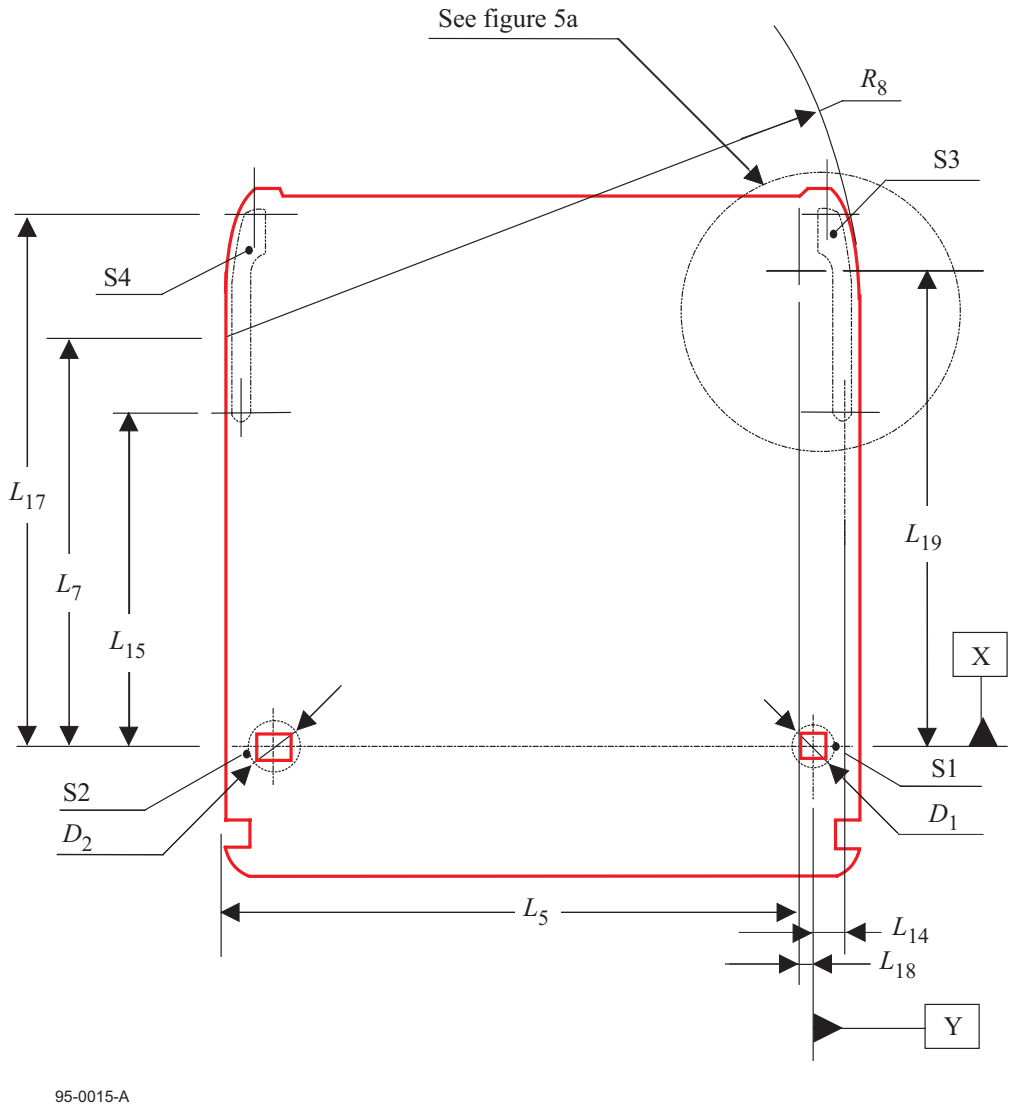

Figure 5 - Surfaces S1, S2, S3 and S4 of the reference plane P

© ISO/IEC 1999 – All rights reserved
Copyright International Organization for Standardization
Provided by IHS under license with ISO
No reproduction or networking permitted without license from IHS
Not for Resale

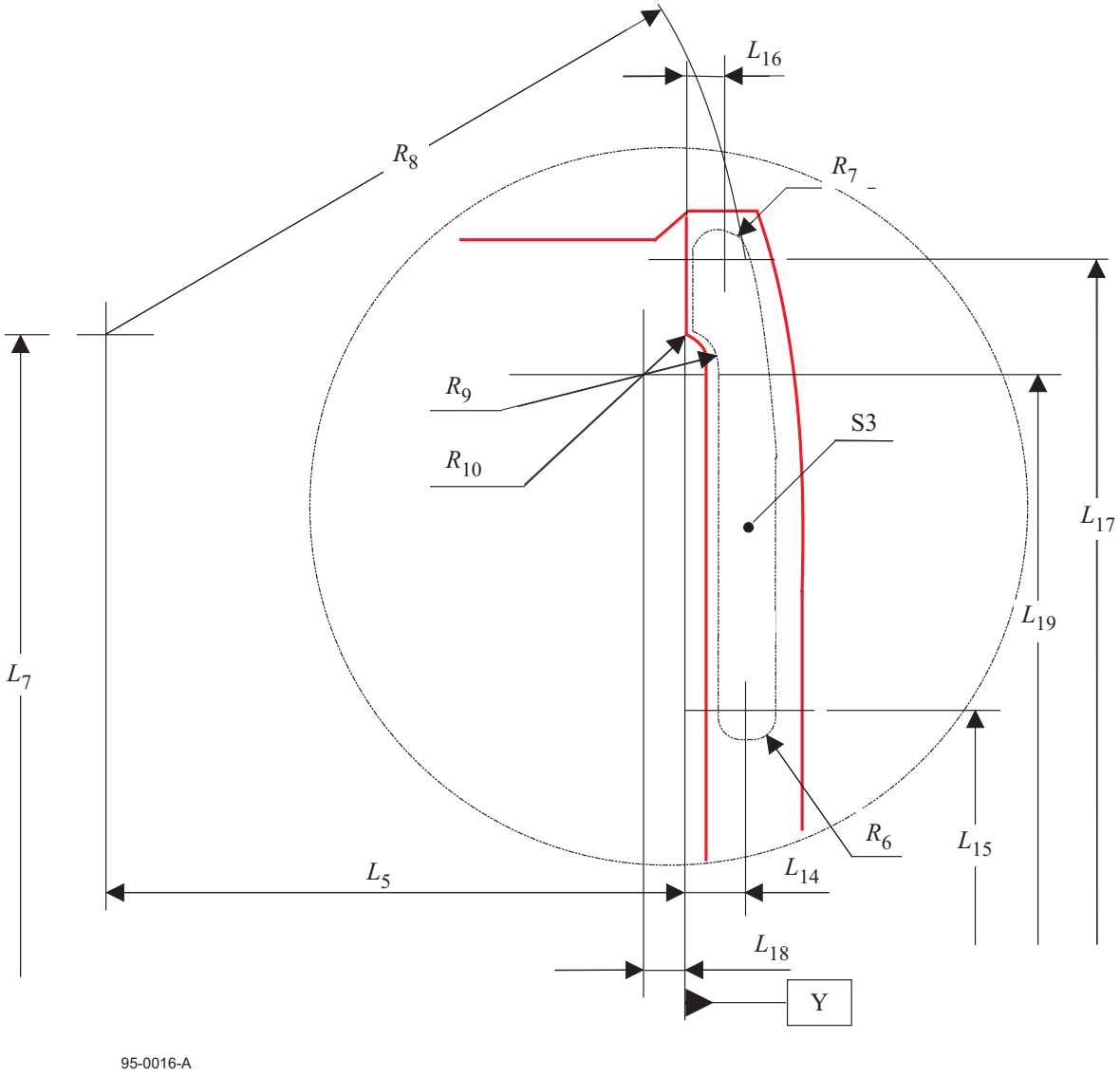

Figure 5a - Detail of surface S3

© ISO/IEC 1999 – All rights reserved
Copyright International Organization for Standardization
Provided by IHS under license with ISO
No reproduction or networking permitted without license from IHS
Not for Resale

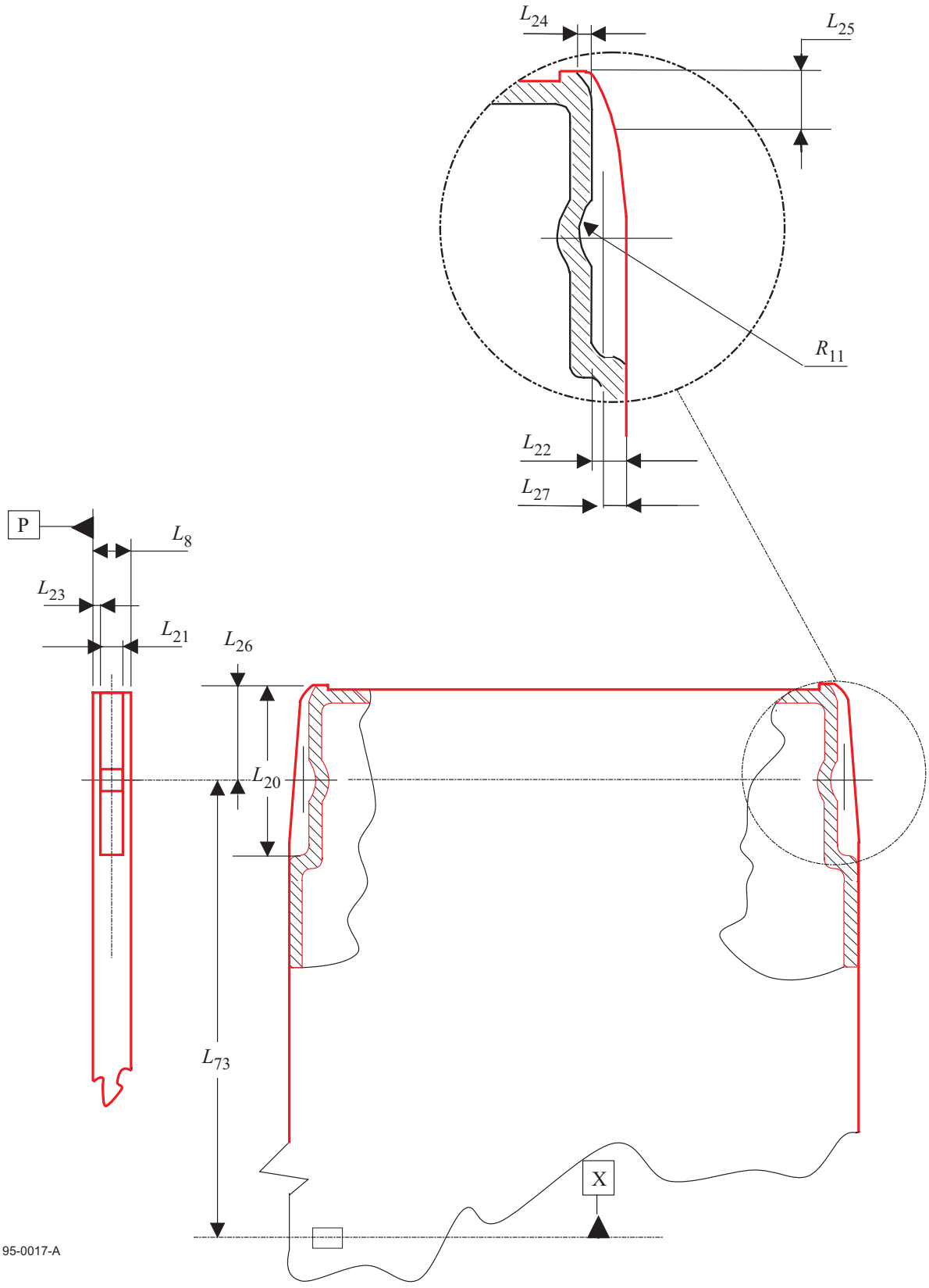

Figure 6 - Insertion slot and detent

© ISO/IEC 1999 – All rights reserved
Copyright International Organization for Standardization
Provided by IHS under license with ISO
No reproduction or networking permitted without license from IHS
Not for Resale

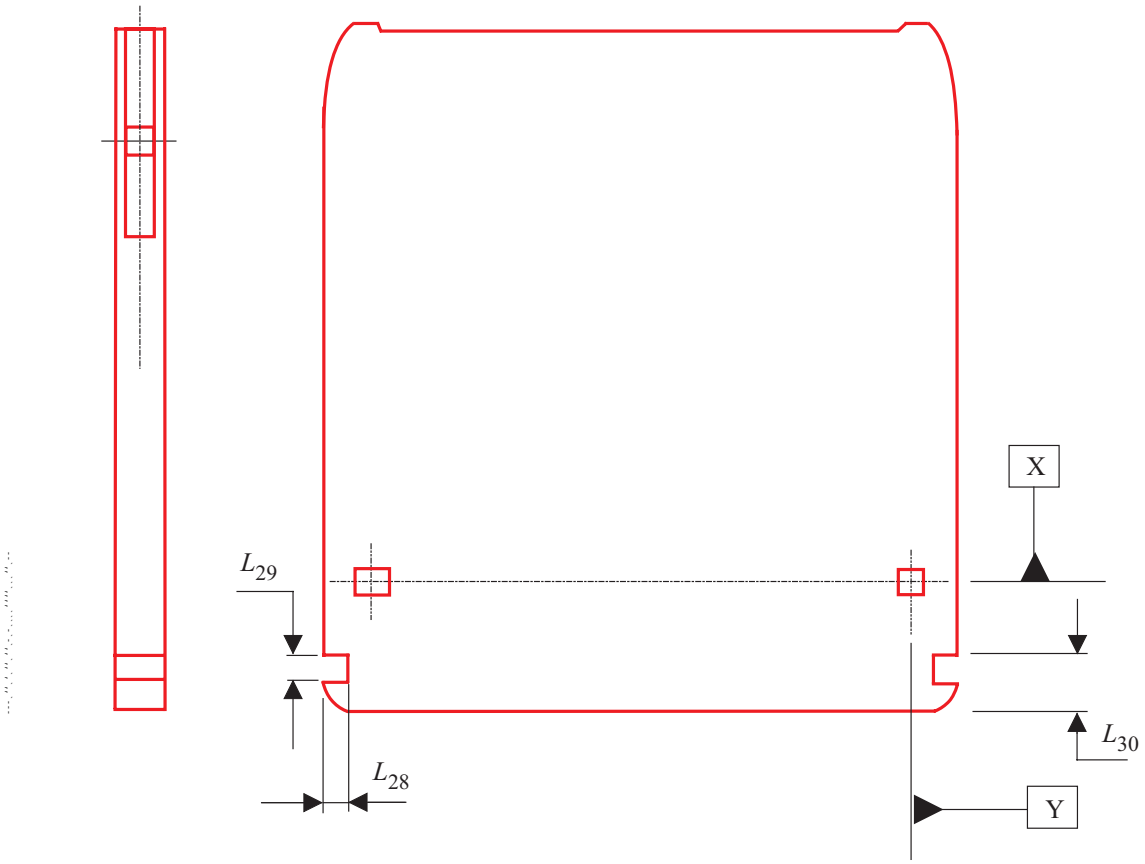

Figure 7 - Gripper slots

© ISO/IEC 1999 – All rights reserved
Copyright International Organization for Standardization
Provided by IHS under license with ISO
No reproduction or networking permitted without license from IHS
Not for Resale

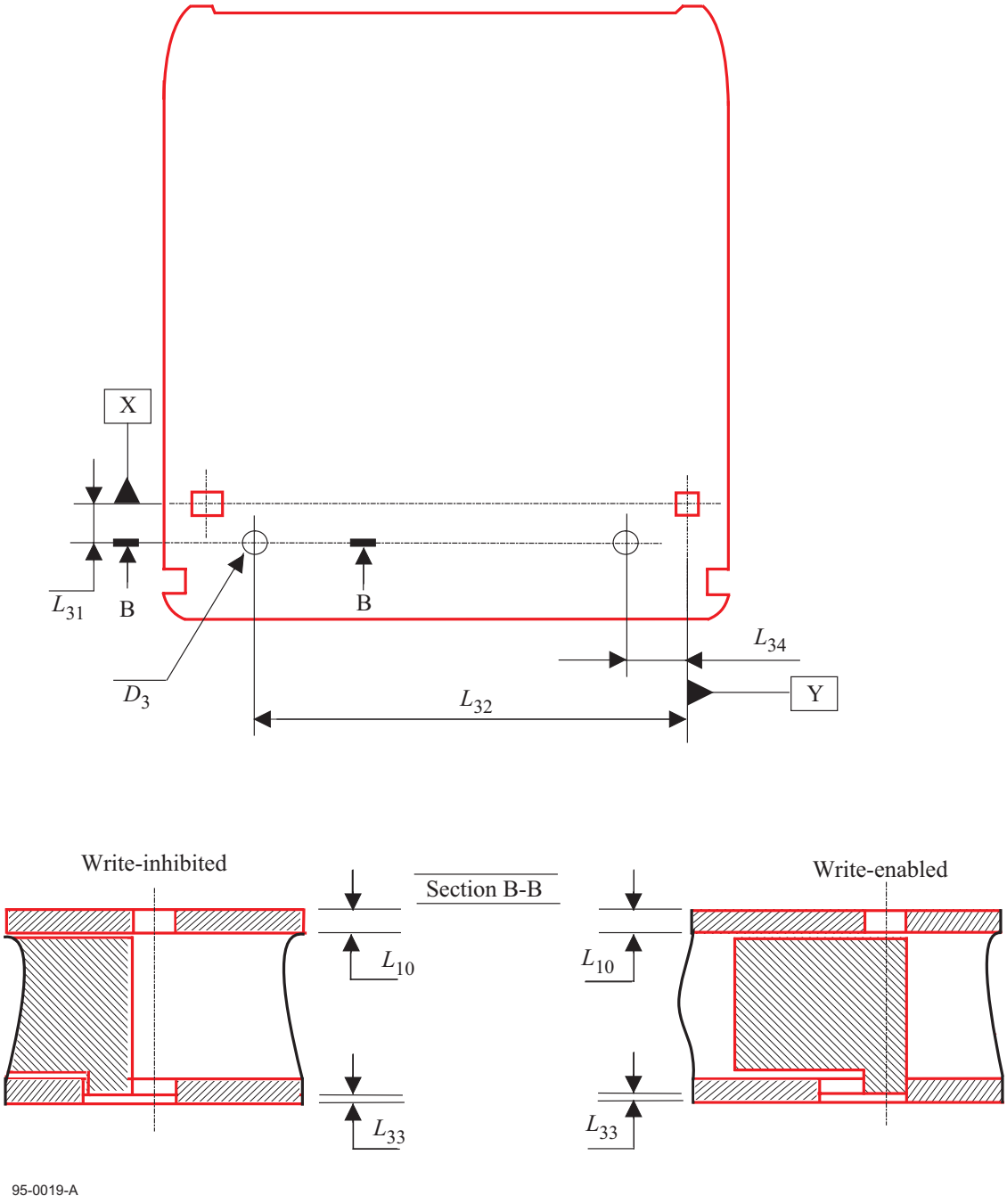

Figure 8 - Write-Inhibit holes

© ISO/IEC 1999 – All rights reserved
Copyright International Organization for Standardization
Provided by IHS under license with ISO
No reproduction or networking permitted without license from IHS
Not for Resale

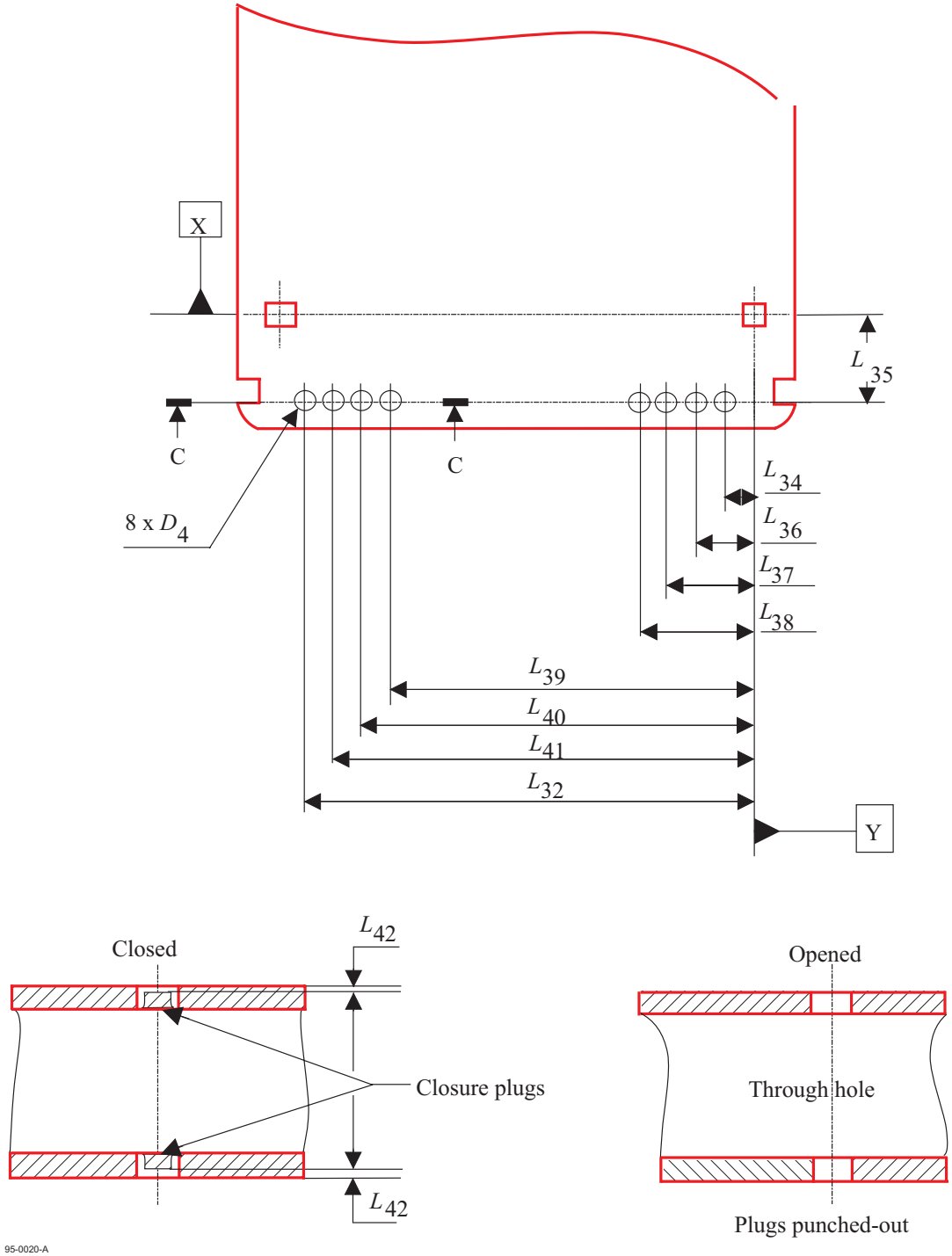

Figure 9 - Media ID sensor holes

© ISO/IEC 1999 – All rights reserved
Copyright International Organization for Standardization
Provided by IHS under license with ISO
No reproduction or networking permitted without license from IHS
Not for Resale

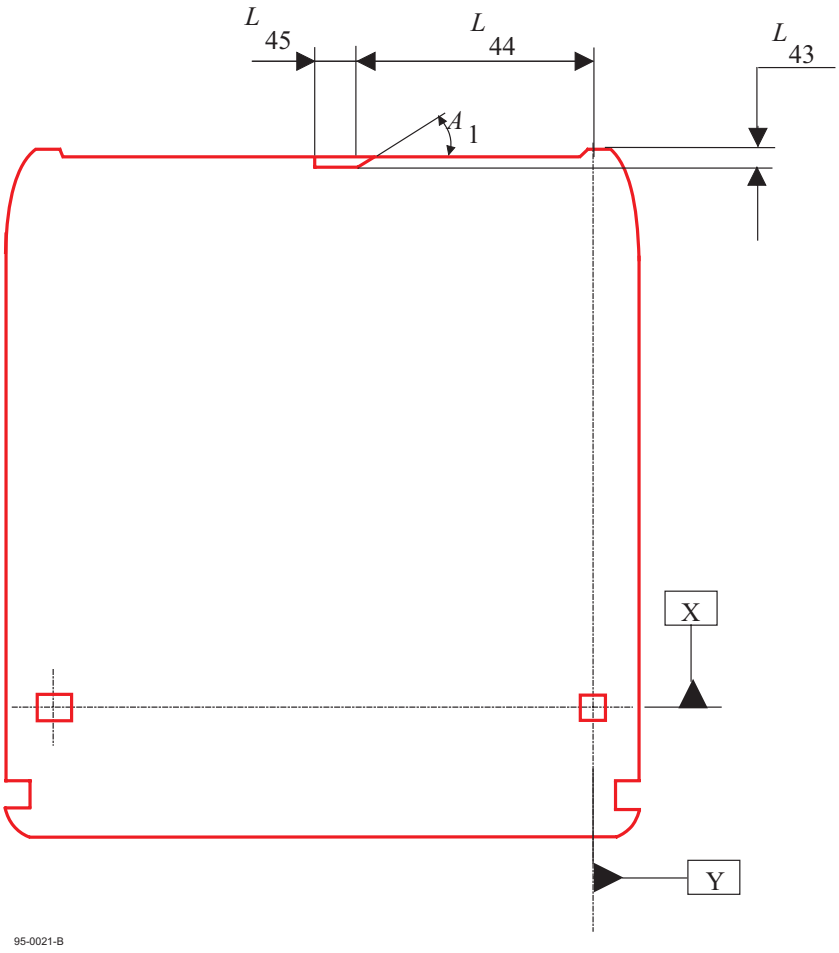

Figure 10 - Shutter sensor notch viewed from Side A

© ISO/IEC 1999 – All rights reserved
Copyright International Organization for Standardization
Provided by IHS under license with ISO
No reproduction or networking permitted without license from IHS
Not for Resale

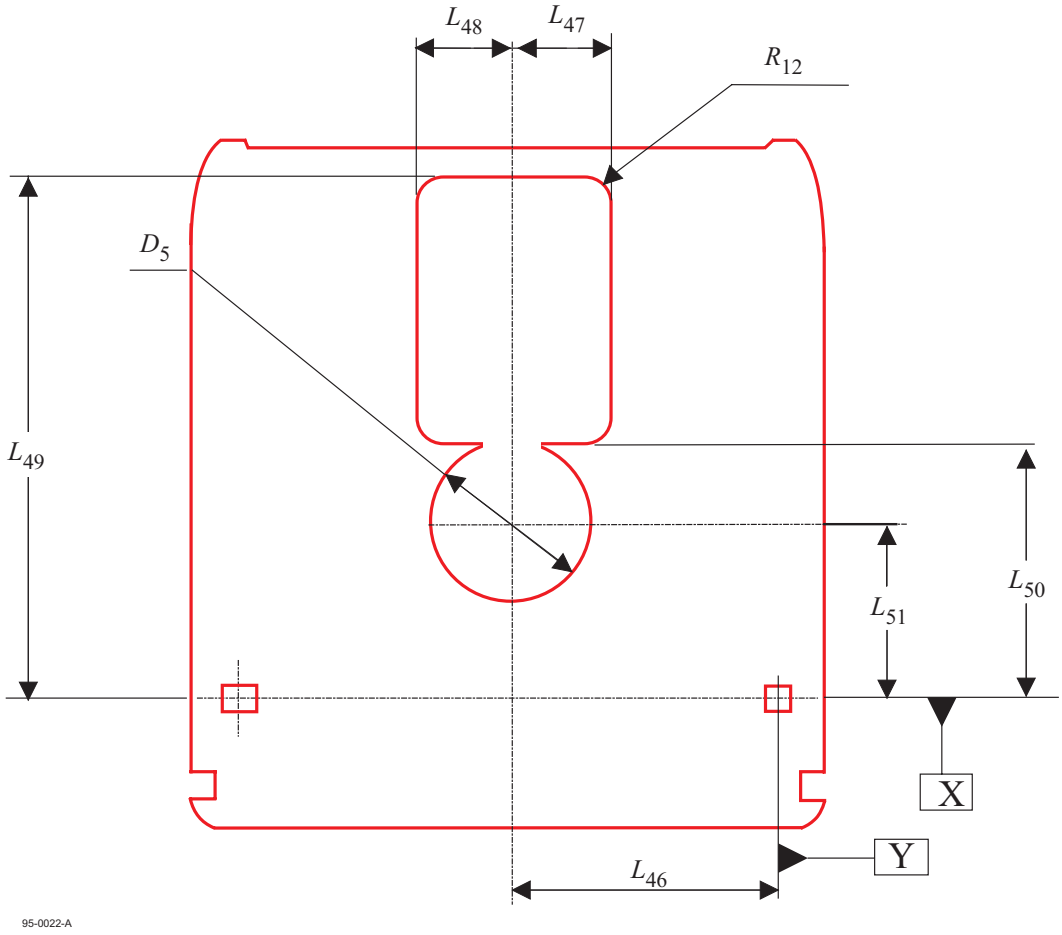

Figure 11 - Head and motor window

--`,,```,,,,````-`-`,,`,,`,`,,`---
Copyright International Organization for Standardization
Provided by IHS under license with ISO
No reproduction or networking permitted without license from IHS
Not for Resale
© ISO/IEC 1999 – All rights reserved

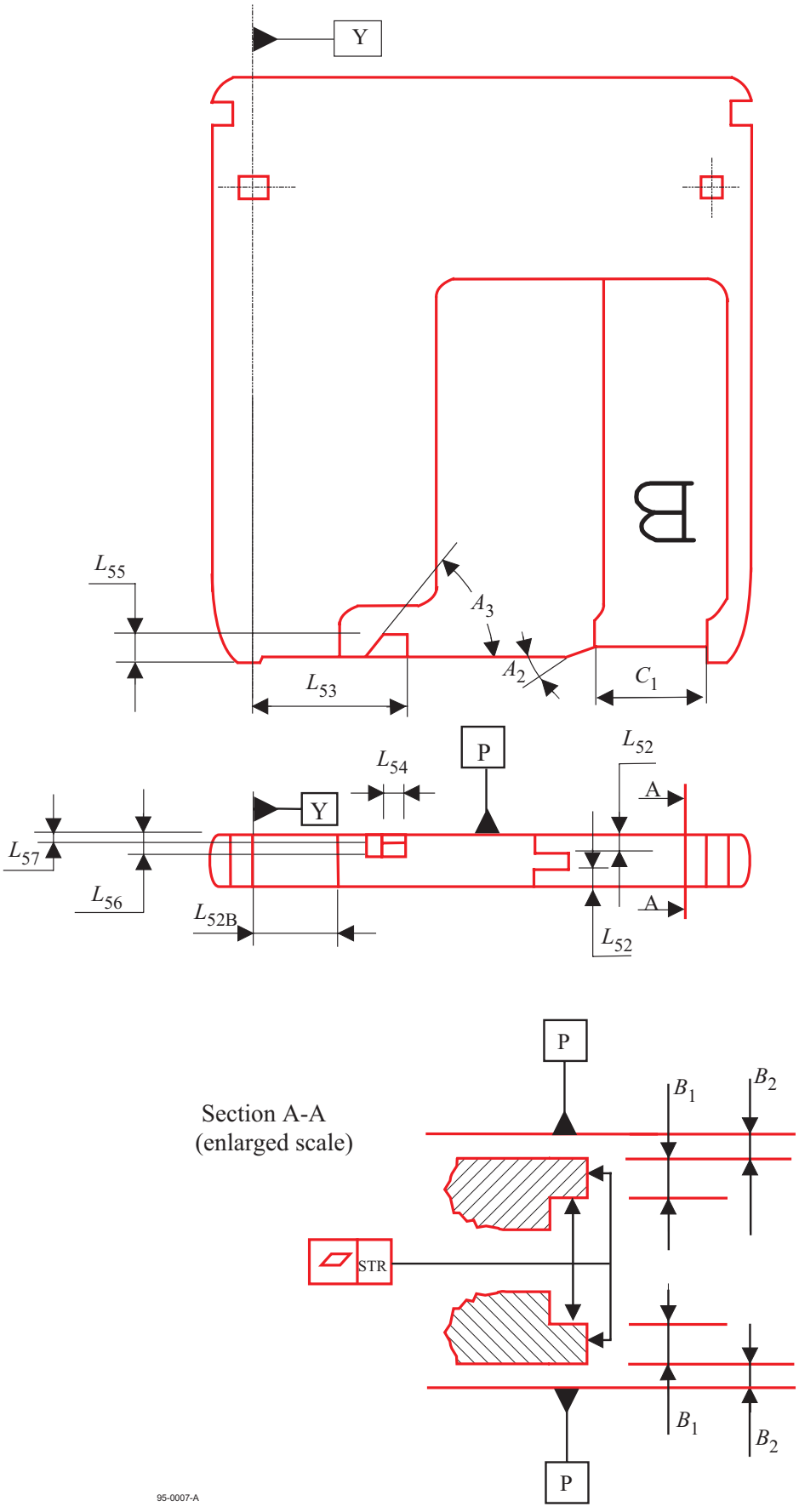

Figure 12 - Shutter opening features

© ISO/IEC 1999 – All rights reserved
Copyright International Organization for Standardization
Provided by IHS under license with ISO
No reproduction or networking permitted without license from IHS
Not for Resale

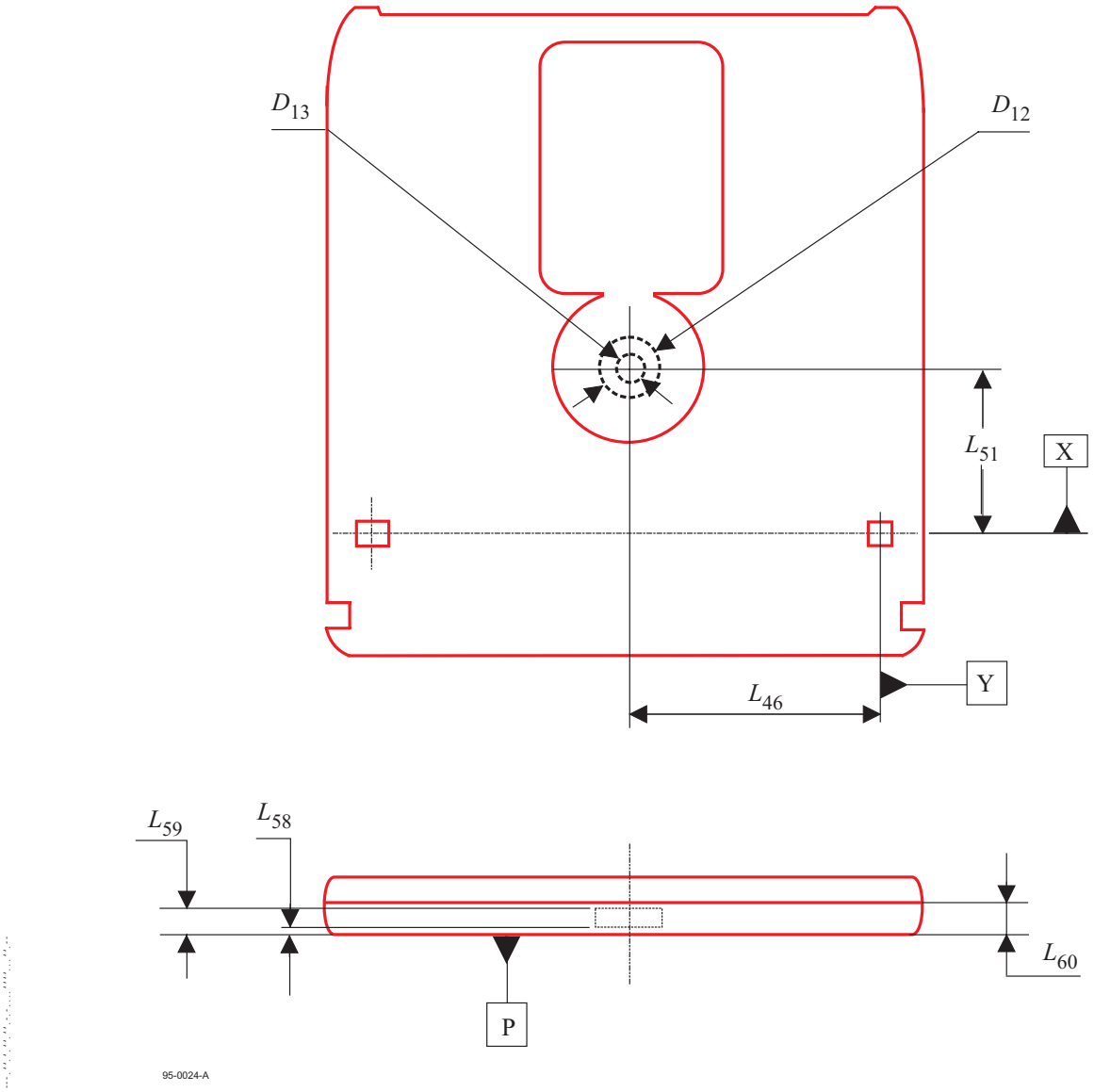

Figure 13 - Capture cylinder

© ISO/IEC 1999 – All rights reserved
Copyright International Organization for Standardization
Provided by IHS under license with ISO
No reproduction or networking permitted without license from IHS
Not for Resale

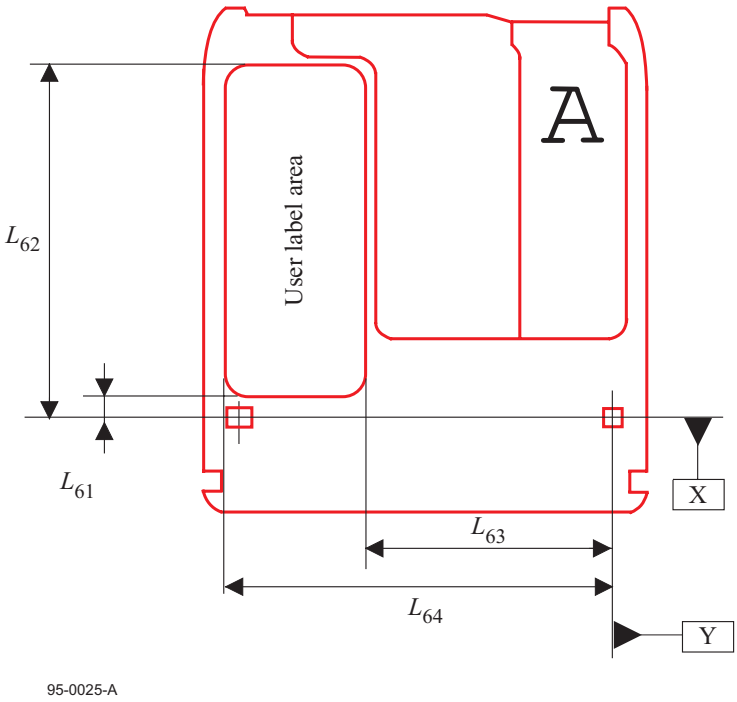

Figure 14a - User label area on Side A

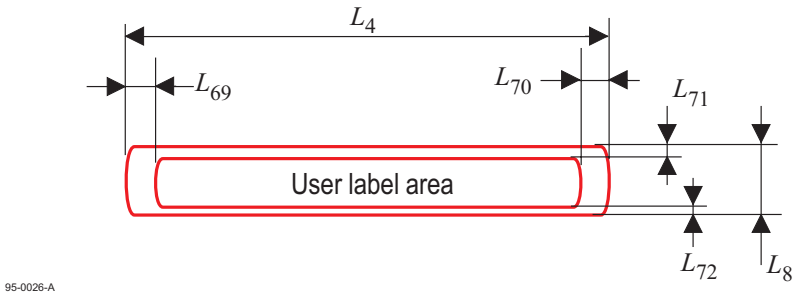

Figure 14b - User label area on bottom surface

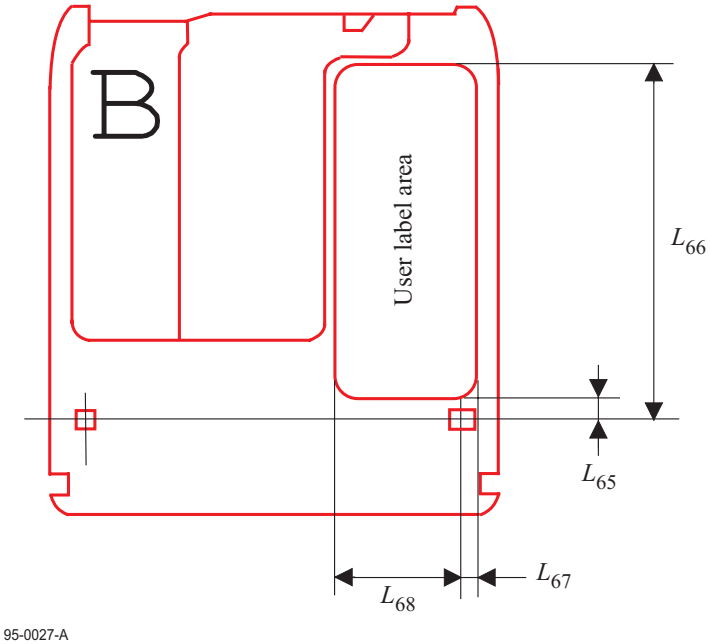

Figure 14c - User label area on Side B

© ISO/IEC 1999 – All rights reserved
Copyright International Organization for Standardization
Provided by IHS under license with ISO
No reproduction or networking permitted without license from IHS
Not for Resale

Section 3: Format of information

13 Track geometry

13.1 Track shape

The Formatted Zone shall contain tracks intended for the continuous servo tracking method. (See table 4).

A track consists of a land-groove-land combination, where each land is shared with a neighboring track. A groove is a trench-like feature, the bottom of which is located nearer to the entrance surface than the land. The centre of the track, i.e. where the recording is made, is the centre of the groove. The lands shall be continuous. Grooves shall occur only in areas without embossed Headers and embossed Recording Fields. The shape of the land is determined by the requirements in clause 21.

This International Standard distinguishes between physical and logical tracks. A physical track forms a 360° turn of a continuous spiral. A logical track is a portion of a physical track containing a defined number of consecutive sectors (see 14.2).

13.2 Direction of track spiral

The track shall spiral inward from the outer diameter to the inner diameter.

13.3 Track pitch

The track pitch is the distance between adjacent track centrelines, measured in a radial direction. It shall be 0,85 μm ± 0,05 μm except in the Control Track PEP Zone. The width of a group of bands corresponding to 35 294 physical tracks shall be 30,00 mm ± 0,10 mm.

13.4 Logical track number

Each logical track shall be identified by a logical track number (see 15.5). Unless otherwise stated all track numbers refer to logical tracks only.

Track 0 shall be located at radius 62,10 mm ± 0,10 mm for 2 048-byte sectors

The logical track numbers of logical tracks located at radii smaller than that of track 0 shall be increased by 1 for each track.

The logical track numbers of logical tracks located at radii larger than that of track 0 shall be negative, and decrease by 1 for each track. Their value is given in TWO's complement, thus track -1 is indicated by (3FFFF).

13.4 Physical track number

In cases where track numbers refer to physical tracks this is clearly stated.

Physical track 0 shall begin with sector 0 of logical track 0.

The track numbers of physical tracks located at radii smaller than that of physical track 0 shall be increased by 1 for each physical track.

The track numbers of physical tracks located at radii larger than that of physical track 0 shall be negative, and decrease by 1 for each physical track.

14 Track format

14.1 Physical track layout

All sectors on the disk shall be the same size.

For disks with 2 048-byte sectors, on each physical track there shall be 22 to 45 sectors. Each sector shall comprise 2 635 bytes. A byte is represented on the disk by 12 Channel bits. Hence, the length of one Channel bit is determined by the requirement that there are (22 to 45) x 2 635 x 12 = 695 640 to 1 422 900 Channel bits on a physical track. The sectors shall be equally spaced over a physical track in such a way that the distance between the first Channel bit of a sector and the first Channel bit of the next sector shall be 31 620 Channel bits ± 5 Channel bits. At the rotational speed of 50 Hz, the period T of a Channel bit equals

$$T = \frac{10^9}{50 \times (695\,640 \text{ to } 1\,422\,900)} \text{ ns} = \text{ 28,8 ns to 14,1 ns}$$

14.2 Logical track layout

On each logical track there shall be 7 sectors.

© ISO/IEC 1999 – All rights reserved
Copyright International Organization for Standardization
Provided by IHS under license with ISO
No reproduction or networking permitted without license from IHS
Not for Resale

14.3 Radial alignment

The Headers of the sectors in each band shall be radially aligned in such a way that the distance between the first Channel bit of sectors in adjacent physical tracks shall be less than 5 Channel bits.

The Headers of the first sector in all bands shall be radially aligned in such a way that the distance between the first Channel bit of the first sectors of each band shall be less than 120 Channel bits.

14.4 Sector number

The sectors of a logical track shall be numbered consecutively from 0 to 6.

15 Sector format

15.1 Sector layout

Sectors shall have the layout shown in figure 15. The number of user bytes per sector is specified by byte 1 of each of the Control Track Zones. The pre-formatted header area of 64 bytes, Transition Area (TA_1) area of 1 byte and the ALPC and Gap area of 17 bytes are as follows.

On the disk 8-bit bytes shall be represented by 12 Channel bits (see clause 16).

In figure 15, the numbers below the fields indicate the number of bytes in each field.

SM	VFO_1	AM	ID_1	VFO_2	AM	ID_2	PA_1
8	26	1	5	16	1	5	2

Pre-formatted Header

Gap	Flag	Gap	ALPC
4	5	2	6

ALPC and Gaps

Pre-formatted Header	TA_1	ALPC, Gaps	VFO_3	Sync	Data field	PA_2	Buffer	TA_2
64	1	17	27	4	2 498 User Data, DMP, CRC, Resync	2	21	1

Figure 15 - Sector format for 2 048 users bytes

15.2 Sector Mark

The Sector Mark shall consist of an embossed pattern that does not occur in RLL (1,7) code (see 16) and is intended to enable the drive to identify the start of the sector without recourse to a phase-locked loop.

The Sector Mark shall have a length of 96 Channel bits and shall consist of pre-recorded, continuous, long marks of different Channel bit lengths followed by a lead-in to the VFO_1 field. This pattern does not exist in data.

There are two kinds of Sector Marks to identify even-numbered and odd-numbered bands. The Sector Mark pattern shall be as shown in Figure 16, where T corresponds to the time length of one Channel bit. The signal obtained from a mark is less than a signal obtained from space. The lead-in shall have the Channel bit pattern 000101 for odd-numbered bands and 000001 for even-numbered bands.

The Sector Mark pattern used for the Inner Manufacturer Zone, the Inner Control Track SFP, the Transition Zone, and the Inner Guard Band shall be the same pattern as that used in band 23. The Sector Mark pattern used for the Lead-in Zone, the Outer Control Track SFP, the Outer Manufacturer Zone, and the Outer Guard Band shall be the same pattern as that used in band 0.

© ISO/IEC 1999 – All rights reserved

Copyright International Organization for Standardization
Provided by IHS under license with ISO
No reproduction or networking permitted without license from IHS
Not for Resale

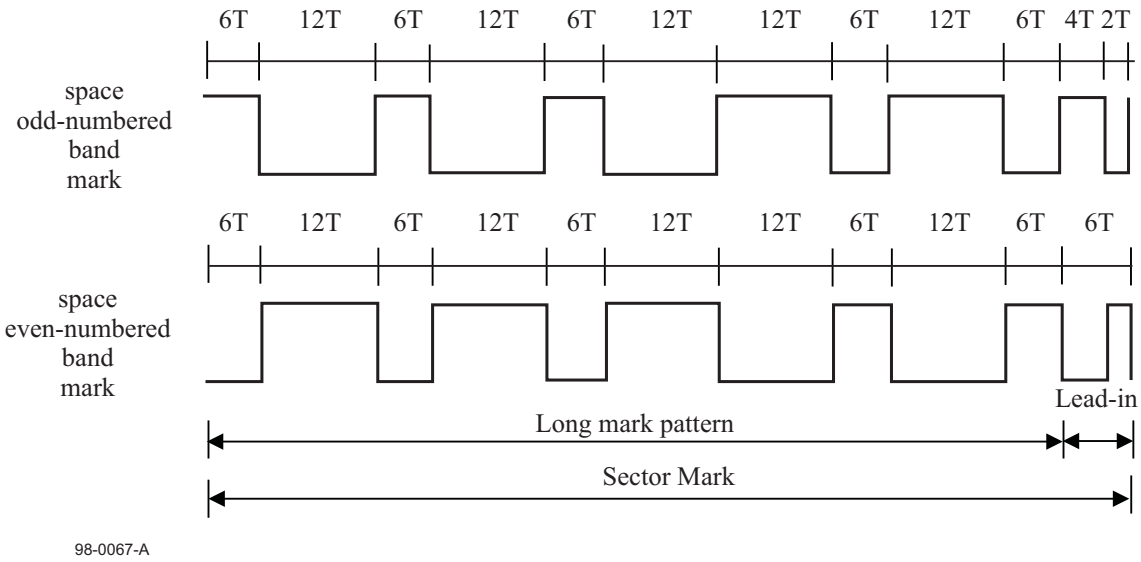

Figure 16 - Sector Mark pattern

15.3 VFO fields

There shall be three fields designated VFO_1, VFO_2 and VFO_3 (figure 17) to synchronize the VFO.

These fields shall be embossed, except for write once sectors, in which case the VFO_3 field shall be written by the drive when data is written to the sector.

The continuous Channel bit pattern for VFO fields shall be:

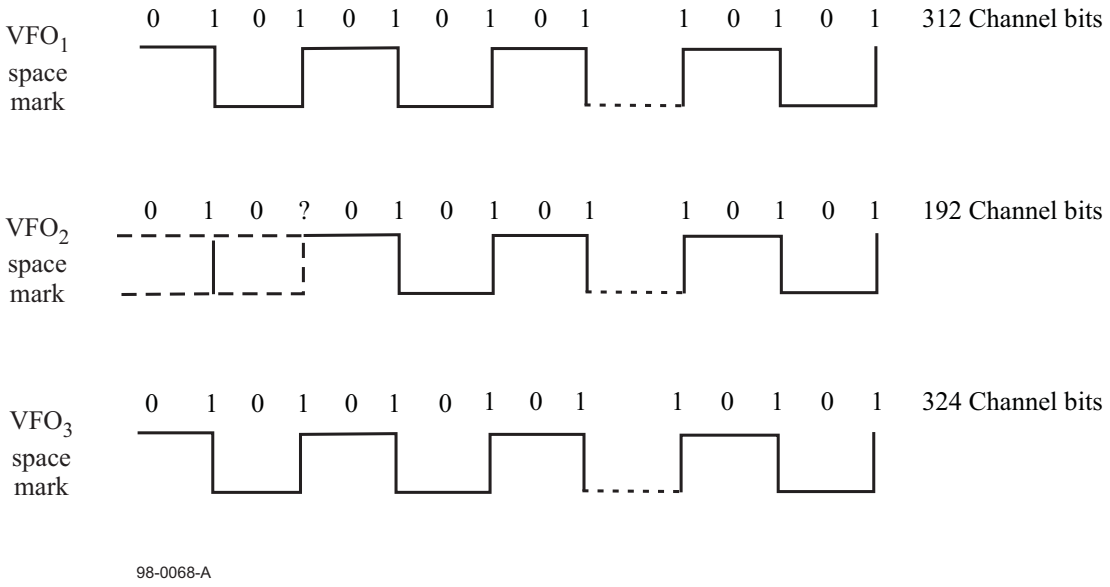

Figure 17 - VFO Field Patterns

The starting bits of VFO_2 shall be ZERO ONE ZERO considered as encoded from input bits ONE ZERO.

The fourth bit (denoted by ?) shall be set to either a ONE or ZERO so as to produce the mark-space pattern as defined. The objective is to set the 9T space between the trailing edge of the last mark of the VFO fields and the leading edge of the first mark of the following Address Mark. This value shall be such to produce the same pattern thereafter as the other VFO fields and to end this field in the trailing edge of an embossed mark.

The start of the VFO_3 field shall be not more than 6 Channel bits from the ideal position given in this International Standard. This tolerance allows for timing inaccuracies of the optical drive controller and shall be compensated for by the ALPC preceding the VFO_3 field and by the Buffer field at the end of the sector.

© ISO/IEC 1999 – All rights reserved
Copyright International Organization for Standardization
Provided by IHS under license with ISO
No reproduction or networking permitted without license from IHS
Not for Resale

15.4 Address Mark (AM)

The Address Mark shall consist of an embossed pattern that does not occur in RLL (1,7) code and which is a run-length violation for this code. The field is intended to give the drive byte synchronization for the following ID field. It shall have a length of 12 Channel bits with the following pattern:

0000 0000 10x0

where the value x shall be determined as follows:

if the first data bits of the following ID field are set to ZERO ZERO, x shall be set to ONE
if the first data bits of the following ID field are not set to ZERO ZERO, x shall be set to ZERO.

Since the last bit of the preceding VFO field is set to ONE, and a bit set to ONE appears in the AM after 8 other Channel bits, this 10-bit sequence constitutes the detection pattern.

15.5 ID fields

The two ID fields shall each contain the addresses of the sector, i.e. track number and sector number of the sector, and CRC bytes. Each field shall consist of five bytes with the following embossed contents:

1st byte

This byte shall specify the second least significant byte of the logical track number.

2nd byte

This byte shall specify the least significant byte of the logical track number.

3rd byte

bit 7	shall specify the ID number. when set to ZERO shall mean the ID_1 field, when set to ONE shall mean the ID_2 field,
bits 6 to 5	shall specify the two most significant bits of the logical track number
bits 4 to 0	shall specify the sector number in binary notation .

4th and 5th bytes

These two bytes shall specify a 16-bit CRC computed over the first three bytes of this field (see annex E).

The first two data bits of the ID field shall be encoded using table 2. When doing this, the last Channel bit from the AM shall be used as input to the encoder.

The first three Channel bits of the ID field shall be decoded using table 3. When doing this, the last two Channel bits from the AM shall be used as input to the decoder.

15.6 Postamble (PA_1)

This field shall be equal in length to 24 Channel bits following the ID_2 field and shall be set as shown in figure 18.

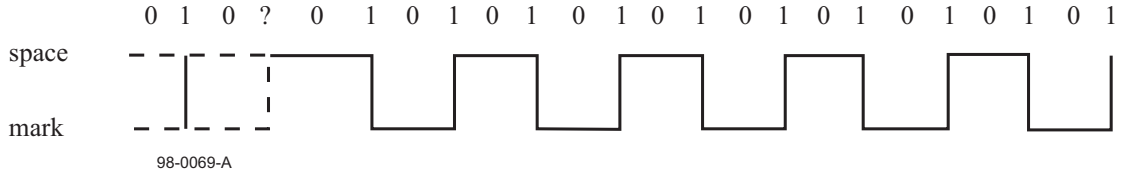

Figure 18 - Postamble pattern

The starting bits of the PA shall be ZERO ONE ZERO and considered as encoded from input bits ONE ZERO.

The value of the 4th bit (identified by ?) shall be such as to end this field in the trailing edge of an embossed mark such that the following gap field is always recorded as a space. Due to the use of the RLL (1,7) encoding scheme (see 16), the framing of the last byte of the CRC in the ID_2 field is uncertain within a few bit times. The Postamble allows the last byte of the CRC to achieve closure and permits the ID field to always end in a predictable manner. This is necessary in order to locate the following field in a consistent manner.

© ISO/IEC 1999 – All rights reserved

Copyright International Organization for Standardization
Provided by IHS under license with ISO
No reproduction or networking permitted without license from IHS
Not for Resale

15.7 Transition Area (TA_1)

There are two Transition Areas in each sector. Each Transition Area shall be equal in length to 12 Channel bits.

This area is used for transition from embossed headers to grooved areas. This area shall not contain user information. For embossed sectors TA_1 shall be embossed with a continuous 2T pattern.

15.8 Gap

There are two Gap fields in each sector.

The first Gap shall be equal in length to 48 Channel bits. It is the first field after TA_1 and gives the drive some time for processing after it has finished reading the header.

The second Gap shall be equal in length to 24 Channel bits.

The contents of the two Gap fields are not specified, and shall be ignored in interchange. For embossed sectors, the Gap shall be embossed with a continuous 2T pattern.

15.9 Flag

This field is intended to prevent inadvertent write operations over previously written data on Types WORM media. For embossed sectors, the Flag shall be embossed with a continuous 2T pattern of 60 Channel bits (010101010101...01).

For sectors in the User Area of the User Zone, the Flag shall be unrecorded if the data field of the sector is unrecorded and shall be recorded with a continuous 2T pattern of 60 Channel bits (010101010101…01) if the Data field of the sector is recorded.

15.10 Auto Laser Power Control (ALPC)

This field shall be equal in length to 72 Channel bits. It is intended for testing the laser power level.

The contents of this field are not specified, and shall be ignored in interchange by this International Standard.

15.11 Sync

The sync field is intended to allow the drive to obtain byte synchronization for the following Data field. It shall have a length of 48 Channel bits and be recorded with the bit pattern

0100 0010 0100 0010 0010 0010 0100 0100 1000 0010 0100 10x0

where the value x shall be as follows:

if the first data bits of the following Data field are set to ZERO ZERO, x shall be set to ONE
if the first data bits of the following Data field are not set to ZERO ZERO, x shall be set to ZERO.

15.12 Data field

The Data field is intended for recording user data. It shall consist of:

– 2 498 bytes comprising

2 048 user bytes
442 bytes for CRC, ECC and Resync
8 bytes for Defect Management Pointer (DMP)

The disposition of these bytes in the Data field is specified in annex F.

The first two data bits of the Data field shall be encoded using table 2. When doing this, the last Channel bit from the Sync field shall be used as input to the encoder.

The first three Channel bits of the Data field shall be decoded using table 3. When doing this, the last two Channel bits from the Sync field shall be used as input to the decoder.

15.12.1 User data bytes

These bytes are at the disposal of the user for recording information. There are 2 048 bytes in each sector.

15.12.2 CRC and ECC bytes

The Cyclic Redundancy Check bytes and Error Correction Code bytes are used by the error detection and correction system to rectify erroneous data. The ECC is a Reed-Solomon code of degree 16.

The computation of the check bytes of the CRC and ECC shall be as specified in annex F.

© ISO/IEC 1999 – All rights reserved
Copyright International Organization for Standardization
Provided by IHS under license with ISO
No reproduction or networking permitted without license from IHS
Not for Resale

15.12.3 Defect Management Pointer (DMP)

There shall be 8 bytes for Defect Management Pointers (DMP). DMPs are used to specify the relationship between a defective sector and its replacement sector.

See clause 19, Defect Management for WORM Media, for more details.

15.12.4 Resync bytes

The Resync bytes enable a drive to regain byte synchronization after a large defect in the data field.

Annex G specifies the Resync bytes and the criteria for selection of which of the two bytes is to be used.

The Resync fields shall be inserted among the rest of the bytes of the Data field as specified in annex F.

15.13 Postamble field (PA_2)

This field shall have a nominal length of 24 Channel bits which shall be used for RLL (1,7) closure. This field shall end in a space to ensure that the Buffer field (see 15.14) shall consist of spaces. Permitted PA_2 patterns can either be PA_1 as defined in clause 15.6, or any other valid RLL (1,7) closure which shall end in space but shall not contain a bit sequence of ONE ONE.

15.14 Buffer field

The Buffer field is needed for three reasons. Firstly, the tolerance on the header-to-header distance as specified in 14.1. Secondly, the tolerance in the start of the VFO_3 field as specified in 15.3. Thirdly, the actual length of the written data, as determined by the runout of the track and the speed variations of the disk during writing of the data

For embossed sectors, the Buffer shall be embossed with a continuous 2T pattern.

15.15 Transition Area (TA2)

This area is used for transition from grooved areas to embossed headers and shall be equal in length to 12 Channel bits. This area shall not contain user information. For embossed sectors TA_2 shall be embossed with a continuous 2T pattern.

16 Recording code

The 8-bit bytes in the two ID fields and in the data field shall be encoded into Channel bits on the disk according to table 2 and annex G. Channel bits in these fields shall be decoded to information bits according to table 3 and annex G. All other fields in a sector have already been defined in terms of Channel bits. Write pulses shall produce marks in a manner such that the edge between a mark and a space or a space and a mark corresponds to a Channel bit that is a ONE.

The recording code used to record all data in the formatted areas of the disk shall be the run-length limited code known as RLL (1,7) as defined in tables 2 and 3.

Table 2 - Encoding of input bits to Channel bits

Preceding Channel bit	Current input bits	Following input bits	Channel bits RLL(1,7)
0 or 1	00	00 or 01	001
0	00	10 or 11	000
1	00	10 or 11	010
0	01	00 or 01	001
0	01	10 or 11	000
1	01	00	010
1	01	01, 10, or 11	000
0	10	00 or 01	101
0	10	10 or 11	010
0	11	00	010
0	11	01, 10, or 11	100

© ISO/IEC 1999 – All rights reserved

Copyright International Organization for Standardization
Provided by IHS under license with ISO
No reproduction or networking permitted without license from IHS
Not for Resale

The coding shall start at the first bit of the first byte of the field to be converted. After a Resync field the RLL (1,7) coding shall start again with the last two input bits of the Resync bytes.

Table 3 - Decoding of Channel bits to information bits

Preceding Channel bits	Current Channel bits	Following Channel bits	Decoded information bits
10	000	00, 01, or 10	00
00 or 01	000	00, 01, or 10	01
00	001	00 or 01	01
01 or 10	001	00 or 01	00
00 or 10	010	00	11
00 or 10	010	01 or 10	10
01	010	00	01
01	010	01 or 10	00
00 or 10	100	00, 01, or 10	11
00 or 10	101	00 or 01	10

17 Formatted Zone

17.1 General description of the Formatted Zone

The Formatted Zone contains all information on the disk relevant for data interchange. The information comprises embossed tracking provisions, embossed headers, embossed data and, possibly, user-written data. In this clause the term 'data' is reserved for the content of the Data field of a sector, which, in general, is transferred to the host.

Clause 17 defines the layout of the information; the characteristics of signals obtained from this information are specified in section 4 and 6.

17.2 Division of the Formatted Zone

The Formatted Zone shall be divided into zones containing the logical tracks indicated in table 4.

The dimensions are given as reference only, and are nominal locations. The tolerance on the location of logical track 0 is specified in clause 13.4. The tolerances on other radii are determined by the tolerance on the track pitch as specified in 13.3.

The location of the zones defined in table 4 are also shown in figure 19.

© ISO/IEC 1999 – All rights reserved
Copyright International Organization for Standardization
Provided by IHS under license with ISO
No reproduction or networking permitted without license from IHS
Not for Resale

Table 4 – Layout of the Formatted Zone

2 048 Byte Sectors	Radius in mm	Logical Track
- Lead-in Zone	62,50 to 62,30	-3 015 to –1 531
- Outer Control Track SFP Zone	62,30 to 62,25	-1 530 to –1 126
- Outer Manufacturer Zone	62,25 to 62,10	-1 125 to –1
(Guard Band)	(62,25 to 62,25)	-1 125 to –1 100
(Test Zone for manufacturers)	(62,25 to 62,24)	-1 099 to –1 048
(Test Zone for drives)	(62,24 to 62,10)	-1 047 to –27
(Guard Band)	(62,10 to 62,10)	-26 to –1
- User Zone	62,10 to 29,68	0 to 182 507
- Inner Manufacturer Zone	29,68 to 29,55	182 508 to 183 013
(Guard Band)	(29,68 to 29,68)	182 508 to 182 520
(Test Zone for drives)	(29,68 to 29,56)	182 521 to 182 974
(Test Zone for manufacturers)	(29,56 to 29,55)	182 975 to 183 000
(Guard Band)	(29,55 to 29,55)	183 001 to 183 013
- Inner Control Track SFP Zone	29,55 to 29,51	183 014 to 183 145
- Transition Zone for SFP	29,51 to 29,50	183 146 to 183 190
- Control Track PEP Zone	29,50 to 29,00	N/A
- Reflective Zone	29,00 to 27,00	N/A

© ISO/IEC 1999 – All rights reserved

Copyright International Organization for Standardization
Provided by IHS under license with ISO
No reproduction or networking permitted without license from IHS
Not for Resale

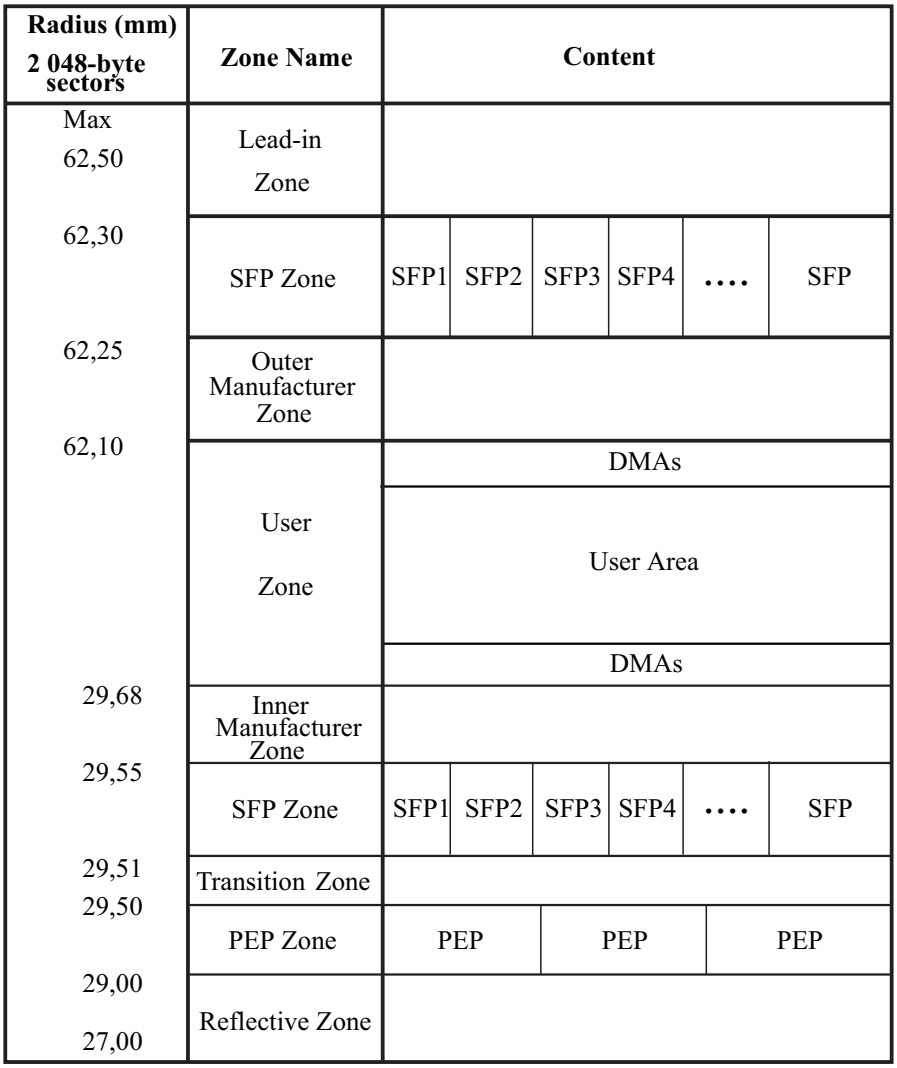

Figure 19 - Location of the defined Zones

17.2.1 Lead-in Zone

The Lead-in Zone shall be used for positioning purposes only.

17.2.2 Manufacturer Zones

There shall be an Inner and an Outer Manufacturer Zone. They are provided to allow the media manufacturer to perform tests on the disk, including write operations, in an area located away from recorded information.

17.2.2.1 Outer Manufacturer Zone

The Outer Manufacturer Zone shall comprise 1 125 logical tracks.

The Outer Manufacturer Zone is divided into four parts: Two Guard bands and in between the actual Test Zones for drives and manufacturers. The Test Zone for drives is intended for tests by a drive for calibration purposes and should not be used by media manufacturers. The following PBs (Physical Blocks) will be written by the media manufacturer and will contain the data patterns specified in table 5. The fixed pattern is 2 048 bytes of (CC) in the user bytes with the defined CRC, ECC, and RESYNC bytes and the DMP bytes are (FF). The increment pattern is 2 048 bytes of (00, 01, 02, … F0, FE, FF) repeated 8 times with the defined CRC, ECC, and RESYN bytes and the DMP bytes are (FF).

© ISO/IEC 1999 – All rights reserved
Copyright International Organization for Standardization
Provided by IHS under license with ISO
No reproduction or networking permitted without license from IHS
Not for Resale

Table 5 - Calibration PBAs

Pattern	PBS (Physical Block Address)	
	Outer Calibration Area	Inner Calibration Area
Fixed	- 444 to - 400	1277835 to 1277856
Increment	- 399 to - 355	1277857 to 1277878
Fixed	- 354 to - 310	1277879 to 1277900

The Test Zone for manufacturers is intended for quality tests by the media manufacturer and should not be used by drives.

The Test Zone for manufacturers may have embossed marks in the data field (see 15.12) that need not comply with the requirements of 15.12 or clause 16. The information in this zone is not specified by this International Standard and shall be ignored in interchange.

Logical tracks -1 to -26 are a buffer and shall not be used.

All physical tracks in the Outer Manufacturer Zone shall contain 45 sectors.

17.2.2.2 Inner Manufacturer Zone

The Inner Manufacturer Zone is also divided into four parts (see 17.2.2.1).

All physical tracks of the Inner Manufacturer zone shall contain 22 sectors.

17.2.3 User Zone

The Data fields in the User Zone can be user-written or contain embossed data, in the format of clause 15, depending upon the type of the disk.

The layout of the User Zone and its sub-divisions is specified in clause 18.

17.2.4 Reflective Zone

This International Standard does not specify the format of the Reflective Zone, except that it shall have the same recording layer as the remainder of the Formatted Zone.

17.2.5 Control Track Zones

The three zones on each side of the disk

Control track PEP Zone
Inner Control Track SFP Zone
Outer Control Track SFP Zone

shall be used for recording control track information.

The control track information shall be recorded in two different formats, the first format in the Control Track PEP Zone, and the second format in the Inner and Outer Control Track SFP Zones.

The Control Track PEP Zone shall be recorded using low frequency phase-encoded modulation.

The Inner and Outer Control Track SFP Zones shall each consist of tracks recorded by the same modulation method and format as is used in the User Zone (see clauses 16 and 18).

The Transition Zone for SFP is an area in which the format changes from the Control Track PEP Zone which contains no servo information to a zone including servo information.

All physical tracks in the Inner Control Track SFP Zone shall have 22 sectors.

All physical tracks in the Outer Control Track SFP Zone shall have 45 sectors.

17.3 Control Track PEP Zone

The information contained in the Control Track PEP Zone gives a general characterization of the disk. It specifies the type of disk, the ECC, the tracking method, etc.

This zone shall not contain any servo information. All information shall be pre-recorded in phase-encoded modulation. The marks in all tracks of this zone shall be radially aligned, so as to allow information recovery from this zone without radial tracking being established by the drive.

© ISO/IEC 1999 – All rights reserved

Copyright International Organization for Standardization
Provided by IHS under license with ISO
No reproduction or networking permitted without license from IHS
Not for Resale

The read power shall not exceed 0,65 mW.

17.3.1 Recording in the PEP Zone

In the PEP Zone there shall be 561 to 567 PEP-Channel bit cells per physical track. A PEP-Channel bit cell shall be 656 PEP-Channel bits ± 1 PEP-Channel bits long. A PEP-Channel bit is recorded by writing marks in either the first or the second half of the cell.

A mark shall be nominally two PEP-Channel bits long and shall be separated from adjacent marks by a space of nominally two PEP-Channel bits.

A ZERO shall be represented by a change from marks to spaces at the centre of the cell and a ONE by a change from spaces to marks at this centre.

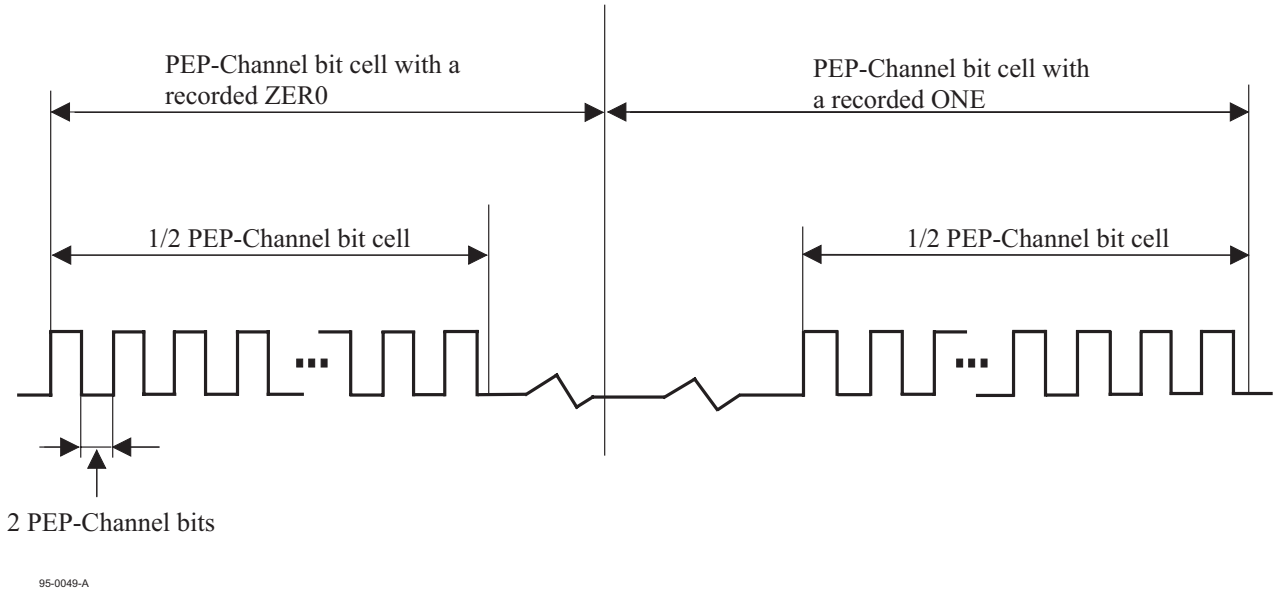

Figure 20 - Example of phase-encoded modulation in the PEP Zone

Requirements for the density of the tracks and the shape of marks in the Control Track PEP Zone are specified in clause 24.

17.3.2 Format of the tracks of the PEP Zone

Each physical track in the PEP Zone shall have three sectors. The numbers below the fields in figure 21 indicate the number of PEP-Channel bits in each field.

|<---------- One physical track (3 sectors) ---------->|

Sector	Gap	Sector	Gap	Sector	Gap
177		177		177	

Figure 21 - Track format in the PEP Zone

The gaps between sectors shall be unrecorded areas having a length corresponding to 10 to 12 PEP-Channel bit cells.

17.3.2.1 Format of a sector

Each sector of 177 PEP-Channel bits shall have the following layout.

|<---------- One sector (177 bits) ---------->|

Preamble	Sync	Sector Number	Data	CRC
16	1	8	144	8

Figure 22 - Sector format in the PEP Zone

17.3.2.1.1 Preamble field

This field shall consist of 16 PEP-Channel bits set to ZERO.

Copyright International Organization for Standardization
Provided by IHS under license with ISO
No reproduction or networking permitted without license from IHS
Not for Resale
© ISO/IEC 1999 – All rights reserved

17.3.2.1.2 Sync field

This field shall consist of 1 ONE bit.

17.3.2.1.3 Sector Number field

This field shall consist of eight bits specifying in binary notation the Sector Number from 0 to 2**.**

17.3.2.1.4 Data field

This field shall comprise 18 8-bit bytes numbered 0 to 17. These bytes shall specify the following.

Byte 0

bit 7 shall be set to ZERO indicating the continuous servo tracking method,

bits 6 to 4 shall be set to 110 indicating a logical ZCAV.

Other settings of these bits are prohibited by this International Standard (see also annex W).

bit 3 shall be set to ZERO

bits 2 to 0 shall be set to 010 indicating RLL (1,7) mark edge modulation,

Other settings of these bits are prohibited by this International Standard.

Byte 1

bit 7 shall be set to ZERO

bits 6 to 4 specify the error correction code and shall be set to 010 to indicate R-S LDC degree 20 interleave.

Other settings of these bits are prohibited by this International Standard.

bit 3 shall be set to ZERO

bits 2 to 0 these bits shall specify in binary notation the power n of 2 in the following formula which expresses the number of user bytes per sector

$$256 \times 2^{n}$$

Values of n other than 3 are prohibited by this International Standard.

Byte 2

This byte shall specify in binary notation the number of sectors in each logical track.

Byte 3

This byte shall give the manufacturer's specification for the baseline reflectance R of the disk when measured at a nominal wavelength of 685 nm. It is specified as a number n such that

$n = 100\ R$.

Byte 4

This byte shall specify that the recording is in-groove in the user zone and it shall indicate the signal amplitude of the pre-recorded marks.

bit 7 shall be set to ONE to specify in-groove recording.

The absolute value of the signal amplitude is given as a number n between -15 and –35 such that

$n = -50\ (I_{sm} / I_{top})$

where I_{sm} is the signal from the Sector Mark in Channel 1 and I_{top} is the signal from an unrecorded, ungrooved area in the User Zone.

bits 6 to 0 shall express this number n. Bit 6 shall be set to ONE to indicate that this number is negative and expressed by bits 5 to 0 in TWO's complement. Recording is high-to-low.

Byte 5

This byte shall specify the capacity of the ODC in Gbytes (with one significant digit to the right of the decimal mark) times 10. For this International Standard, this byte shall be set to (34) representing a capacity of 5,2 Gbytes.

-`,,```,,,,````-`-,,`,,`,`,,`---

© ISO/IEC 1999 – All rights reserved
Copyright International Organization for Standardization
Provided by IHS under license with ISO
No reproduction or networking permitted without license from IHS
Not for Resale

Byte 6

This byte shall specify in binary notation a number *n* representing 20 times the maximum read power expressed in milliwatts which is permitted for reading the SFP Zone at a rotational frequency of 50 Hz and a wavelength of 685 nm. This number *n* shall be between 8 and 40.

Byte 7

The setting of this byte shall specify the disk type:

0001 0000 indicates a Write Once Read Many ODC using irreversible recording

Other settings of this byte are prohibited by this International Standard (see also annex W).

Byte 8

This byte shall specify the next most significant byte of the logical track number in which the Outer Control Track SFP Zone starts. It shall be set to (FA) representing the next MSB of track number -1 530

Byte 9

This byte shall specify the least significant byte of the logical track number in which the Outer Control Track SFP Zone starts. It shall be set to (06) representing the LSB of track number -1 530.

Byte 10

This byte shall specify the next most significant byte of the logical track number in which the Inner Control Track SFP Zone starts. It shall be set to (CA) representing the next MSB of Logical Track Number 183 014.

Byte 11

This byte shall specify the least significant byte of the logical track number in which the Inner Control Track SFP Zone starts. It shall be set to (E6) representing the LSB of Logical Track Number 183 014.

Byte 12

This byte shall specify the track pitch in micrometers times 100. It shall be set to (55) representing a track pitch of 0,85 μm.

Byte 13

This byte shall specify that the recording is In-groove and it shall indicate the signal amplitude and polarity of the user-written marks.

bit 7 shall be set to ONE to specify in-groove recording.

The value of the signal amplitude is given as a number *n* between +35 and +75, or between –35 and –75 such that

$$n = 50 \, (I_L \, / \, I_{IG})$$

where I_L is the low frequency pattern signal from the User-written data (see 27.1). I_L is a positive number *n* when recording is low-to-high. Conversely, it is a negative number *n* when recording is high-to-low. I_{IG} is the maximum signal from an unrecorded, grooved area in the User Zone. Both I_L and I_{IG} are measured with Channel 1.

bits 6 to 0 shall express this number *n*. If bit 6 is set to ZERO this number is positive. If bit 6 is set to ONE this number is negative and expressed in TWO's complement.

Byte 14

This byte shall specify the most significant byte of the Logical Track Number in which the Outer SFP Zone starts. It shall be set to (FF) representing the MSB of Logical Track Number -1 530.

Byte 15

This byte shall specify the most significant byte of the logical track number in which the Inner Control Track SFP Zone starts. It shall be set to (02) representing the MSB of Logical Track Number 183 014.

© ISO/IEC 1999 – All rights reserved
Copyright International Organization for Standardization
Provided by IHS under license with ISO
No reproduction or networking permitted without license from IHS
Not for Resale

Bytes 16 and 17

The contents of these bytes are not specified by this International Standard and shall be ignored in interchange.

17.3.2.1.5 CRC

The eight bits of the CRC shall be computed over the Sector Number field and the Data field of the PEP sector.

The generator polynomial shall be

$$G(x) = x^8 + x^4 + x^3 + x^2 + 1$$

The residual polynomial R(x) shall be

$$R(x) = \left(\sum_{i=144}^{i=151} \overline{a_i} x^i + \sum_{i=0}^{i=143} a_i x^i \right) x^8 \mod G(x)$$

where a_i denotes a bit of the input data and $\overline{a}_i$ an inverted bit. The highest order bit of the sector number field is a_{151}.

The eight bits c_k of the CRC are defined by

$$R(x) = \sum_{k=0}^{k=7} c_k x^k$$

where c_7 is recorded as the highest order bit of the CRC byte of the PEP sector.

17.3.2.2 Summary of the format of the Data field of a sector

Table 6 - Format of the Data field of a sector of the PEP Zone

Byte \ Bit	7	6	5	4	3	2	1	0
0	Format	Logical ZCAV			0	Modulation code		
1	0	ECC			0	Number of user bytes		
2	Number of sectors in each logical track							
3	Baseline reflectance at 685 nm							
4	0	Amplitude and polarity of pre-formatted data						
5	ODC Capacity							
6	Maximum read power for the SFP Zone at 50 Hz and 685nm							
7	Disk Type							
8	Start Track of Outer SFP Zone, next MSB of Logical Track Number							
9	Start Track of Outer SFP Zone, LSB of Logical Track Number							
10	Start Track of Inner SFP Zone, next MSB of Logical Track Number							
11	Start Track of Inner SFP Zone, LSB of Logical Track Number							
12	Track pitch							
13	1	Amplitude and polarity of user data						
14	Start track of Outer SFP Zone, MSB of Logical Track Number							
15	Start track of Inner SFP Zone, MSB of Logical Track Number							
16	Not specified by this International Standard							
17	Not specified by this International Standard							

© ISO/IEC 1999 – All rights reserved

Copyright International Organization for Standardization
Provided by IHS under license with ISO
No reproduction or networking permitted without license from IHS
Not for Resale

17.4 Control Track SFP Zones

The two Control Track SFP Zones shall be pre-recorded in the sector format specified in clause 15. The pre-recorded data marks shall satisfy the requirements for the signals specified in clause 23.

Each sector of the SFP Zones (see 17.2.5) shall include 512 bytes of information numbered 0 to 511;

– a duplicate of the PEP information (18 bytes),
– media information (362 bytes),
– system information (132 bytes),

In the case of 2 048-byte sectors these first 512 bytes shall be followed by 1 536 bytes set to (FF).

17.4.1 Duplicate of the PEP information

Bytes 0 to 17 shall be identical with the 18 bytes of the Data field of a sector of the PEP Zone (see 17.3.2.1.4).

17.4.2 Media information

Bytes 18 to 47 shall specify the conditions for

Wavelength L_1 = 685 nm;
Baseline Reflectance R_1;
and Rotational Frequency N_1 = 50 Hz.

For the value of N one set of write power for the 4T mark is given: it contains three values for the inner, middle and outer radius.

All values specified in bytes 18 to 47 shall be such that the requirements of 11.5 and of clauses 25, 26, 27 and 28 are met (see table 6).

Byte 18

This byte shall specify the wavelength L_1, in nanometres, as a number n between 0 and 255 such that

$$n = 1/5\ L_1$$

This byte shall be set to n = 137 for ODCs according to this International Standard.

Byte 19

This byte shall specify the baseline reflectance R_1 (see 11.5.5) at wavelength L_1 as a number n such that

$$n = 100\ R_1$$

Byte 20

This byte shall specify the rotational frequency N_1, in hertz, as a number n such that

$$n = N_1$$

This byte shall be set to n = 50 for ODCs according to this International Standard.

Byte 21

This byte shall specify the maximum read power P_1 in milliwatts, for the User Zone as a number n between 8 and 40 such that

$$n = 20\ P_1$$

Bytes 22 to 24

These bytes are not used and shall be set to (FF).

The following bytes 25 to 27 shall specify the write power W_p for 4T marks in milliwatts indicated by the manufacturer of the disk (see 25.3.3). W_p is expressed as a number between 0 and 255 such that

$$n = 5\ W_p$$

© ISO/IEC 1999 – All rights reserved
Copyright International Organization for Standardization
Provided by IHS under license with ISO
No reproduction or networking permitted without license from IHS
Not for Resale

Byte 25

This byte shall specify W_p for

r = 30 mm

Byte 26

This byte shall specify W_p for

r = 45 mm

Byte 27

This byte shall specify W_p for

r = 60 mm

Bytes 28 to 30

These bytes are not used and shall be set to (FF).

The following bytes 31 to 33 shall specify the write power W_s for 2T marks in milliwatts indicated by the manufacturer (see 25.3.2). W_s is expressed by a number n between 0 and 255 such that

$n = 5\ W_s$

Byte 31

This byte shall specify W_s for

r = 30 mm

Byte 32

This byte shall specify W_s for

r = 45 mm

Byte 33

This byte shall specify W_s for

r = 60 mm

Byte 34 to 43

These bytes shall be set to (FF).

Byte 44

This byte shall be set to (00).

Byte 45 to Byte 379

These bytes shall be set to (FF).

17.4.3 System Information

Bytes 380 to 386 are mandatory. Bytes 384 to 386 shall specify in binary notation the Logical Track Number of the last logical track of the User Zone. The total number of logical tracks in this zone equals the Logical Track Number of the last logical track of the User Zone increased by 1. For disks with 2 048-byte sectors, the Logical Track Number of the last logical track of the User Zone shall be 182 507.

Bytes 380 to 383: Reserved

These bytes shall be set to (FF).

Byte 384

This byte shall be set to (02) for 2 048-byte sectors indicating the most significant byte of the number of the last logical track of the User Zone.

© ISO/IEC 1999 – All rights reserved

Copyright International Organization for Standardization
Provided by IHS under license with ISO
No reproduction or networking permitted without license from IHS
Not for Resale

Byte 385

This byte shall be set to (C8) for 2 048-byte sectors indicating the next most significant byte of the number of the last logical track of the User Zone.

Bytes 386

This byte shall be set to (EB) for 2 048-byte sectors indicating the least significant byte of the number of the last logical track of the User Zone.

Bytes 387 to 399: Reserved

These bytes shall be set to (FF).

Bytes 400 to 479

For Type WORM media these bytes shall be set to (FF).

Bytes 480 to 511: Unspecified data

The contents of these bytes are not specified in this International Standard. They may contain an identification of the manufacturer. They shall be ignored in interchange.

Bytes 512 to 2 047: Reserved

These bytes shall be set to (FF).

Table 7 - Summary of media information

Category	Mandatory	Optional or (FF)	Mandatory (FF)
Media Parameter	0- 15		
Unspecified		16-17	
L_1 & R_1	18-19		
N_1 Values	20-21, 25-27,31-33,44		22-24,28-30,34-43,
Not used			45-383
Figure of Merit			
Reserved			
Last track number	384-386		
Reserved			387-399
Reserved			400-479
Unspecified		480-511	
2 048-byte sectors			512-2 047

18 Layout of the User Zone

18.1 General description of the User Zone

The User Zone consists of 2 048 Byte sectors and has a data capacity per side of 2,616 Gbytes. Spare sectors and the non-usable sectors are included in this figure.

The location and size of the User Zone are specified in clause 17.

18.2 Divisions of the User Zone

The User Zone shall include four Defect Management Areas (DMA), two at the beginning of the zone and two at the end. The area between the two sets of DMAs is called the User Area.

The entire User Zone shall also be divided into bands as a result of the ZCAV organization of the disk.

Each of these bands shall contain the same number of physical tracks. Each such band is divided into logical tracks which have the same number of sectors. The number of logical tracks per band decreases from band to band moving from the outer radius to the inner radius.

The hierarchy is thus:

7 sectors	= 1 logical track
4 994 to 10 215 logical tracks	= 1 band
1 589 physical tracks	= 1 band
24 bands	= the User Zone

© ISO/IEC 1999 – All rights reserved
Copyright International Organization for Standardization
Provided by IHS under license with ISO
No reproduction or networking permitted without license from IHS
Not for Resale

The User Zone shall be divided into 24 bands numbered 0 to 23 as shown in table 7. Each band is made up of a Data Area and a Primary Reserved Area (PRA). A Secondary Reserved Area (SRA) is also contained in Band 23. Reserved areas are used for both replacements for defective sectors and for write power calibration.

18.2.1 Reserved Area Use

The spare sectors that are assigned as replacements for defective primary sectors are allocated beginning at the lowest track and sector number of the PRA with subsequent assignments allocated to the next higher available track and sector number. The reserved sectors used as calibration sectors are allocated beginning at the highest track and sector number of the PRA with subsequent calibrations allocated to the next lower available sector track and sector number. The available sectors in the PRA of a group are exhausted when there are no free sectors remaining between the two allocation processes. Further allocation of replacement or calibration sectors must be made from the Secondary Reserved Area (SRA). The sectors in the SRA are treated in the same fashion i.e. replacement sectors are allocated from the beginning of the SRA increasing in address, and calibration sectors are allocated from the end of the SRA in decreasing addresses.

In order to manage the allocation of reserved sectors used for replacements for defective primary sectors and sectors used for the calibration process, a 12-byte Defect Management Pointer (DMP) is defined in each sector (in addition to the user data and ECC). See 19.2.

18.3 User Area

The Data fields in the User Area are intended for recording of user data (see table 8).

The User Area shall consist of a Write Once Read Many (WORM) Zone.

The User Area shall begin with track 6. At the boundaries between bands, it shall not include the last 40 tracks of a band, and it shall not include the first 20 tracks of the next band.

This International Standard describes a single partitioning where the User Area shall be partitioned into 24 Groups, each of which resides in one band (see 18.6.2).

© ISO/IEC 1999 – All rights reserved

Copyright International Organization for Standardization
Provided by IHS under license with ISO
No reproduction or networking permitted without license from IHS
Not for Resale

Table 8 – Partitioning of the User Area

Band No.	Sectors per physical track	Tracks per band	Start track	Data start	Spares start	Buffer start	Test start	Buffer start
0	45	10 215	0	6	9 158	10 175	10 188	10 195
1	44	9 988	10 215	10 235	19 170	20 163	20 176	20 183
2	43	9 761	20 203	20 223	28 953	29 924	29 937	29 944
3	42	9 534	29 964	29 984	38 510	39 458	39 471	39 478
4	41	9 307	39 498	39 518	47 840	48 765	48 778	48 785
5	40	9 080	48 805	48 825	56 943	57 845	57 858	57 865
6	39	8 853	57 885	57 905	65 818	66 698	66 711	66 718
7	38	8 626	66 738	66 758	74 467	75 324	75 337	75 344
8	37	8 399	75 364	75 384	82 889	83 723	83 736	83 743
9	36	8 172	83 763	83 783	91 083	91 895	91 908	91 915
10	35	7 945	91 935	91 955	99 051	99 840	99 853	99 860
11	34	7 718	99 880	99 900	106 792	107 558	107 571	107 578
12	33	7 491	107 598	107 618	114 305	115 049	115 062	115 069
13	32	7 264	115 089	115 109	121 592	122 313	122 326	122 333
14	31	7 037	122 353	122 373	128 652	129 350	129 363	129 370
15	30	6 810	129 390	129 410	135 485	136 160	136 173	136 180
16	29	6 583	136 200	136 220	142 090	142 743	142 756	142 763
17	28	6 356	142 783	142 803	148 469	149 099	149 112	149 119
18	27	6 129	149 139	149 159	154 621	155 228	155 241	155 248
19	26	5 902	155 268	155 288	160 545	161 130	161 143	161 150
20	26	5 675	161 170	161 190	166 243	166 805	166 818	166 825
21	24	5 448	166 845	166 865	171 714	172 253	172 266	172 273
22	23	5 221	172 293	172 313	176 957	177 474	177 487	177 494
23	22	4 994	177 514	177 534	180 173	-	-	-
Secondary Reserved Area					180 669	182 488	182 501	N/A

© ISO/IEC 1999 – All rights reserved
Copyright International Organization for Standardization
Provided by IHS under license with ISO
No reproduction or networking permitted without license from IHS
Not for Resale

18.4 Defect Management Areas (DMAs)

The four Defect Management Areas contain information on the structure of the User Area and on the defect management. The locations of the DMAs are shown in figure 19. Each DMA shall have a length of 21 sectors. The address of the first sector of each DMA is given by table 9.

Table 9 - Location of the DMAs

DMA Number	Track numbers	Sector numbers
DMA 1	0	0
DMA 2	3	0
DMA 3	182 482	0
DMA 4	182 485	0

The unused sector that lies after DMA2 and the unused sector that lies after DMA4, are reserved for future standardization.

Each DMA shall contain a Disk Definition Structure.

18.5 Disk Structure Table (DST)

The DMA contains the Disk Structure Table (DST) after initialization of the media. The DST shall consist of a table with a length of one sector which describes the location and length of the Reserved Area.

The contents of the remaining sectors of the DMAs are ignored in interchange.

The first track of the data zone is the lowest numbered track not belonging to the DMA or the Secondary Reserved Area. The data zone starts at sector number 0 of the track specified in byte 2 of the DST.

The first track of the data area in each group is defined in table 8.

The first track of the Reserved Area in each group is defined in table 8. The corresponding track number shall be recorded in the DST.

The starting track of the Secondary Reserved Area is defined in table 8. The starting track address of the first track and the number of sectors in the Secondary Reserved Area shall be recorded in the DST.

Table 10 summarizes the information that shall be recorded in each of the four DSTs.

© ISO/IEC 1999 – All rights reserved

Copyright International Organization for Standardization
Provided by IHS under license with ISO
No reproduction or networking permitted without license from IHS
Not for Resale

Table 10 - Byte assignment of the Disk Structure Table (DST)

Byte Number	Description
00	(0A) DST Identifier
01	(0A) DST Identifier
02	(06) Track number of the first track of the first group
03	(10) Indicating that the pointer defect management has been used and that no Secondary Defect List has been recorded.
04	(00) Number of groups MSB.
05	(18) Number of groups LSB.
06	(FF)
07	(FF)
08	Group 0 Start track number of Primary Reserved Area (MSB) - See table 7.
09	Group 0 Start track number of Primary Reserved Area (Next MSB)
10	Group 0 Start track number of Primary Reserved Area (Next LSB)
11	Group 0 Start track number of Primary Reserved Area (LSB)
12	Group 1 Start track number of Primary Reserved Area (MSB)
13	Group 1 Start track number of Primary Reserved Area (Next MSB)
14	Group 1 Start track number of Primary Reserved Area (Next LSB)
15	Group 1 Start track number of Primary Reserved Area (LSB)
.	.
96	Group 22 Start track number of Primary Reserved Area (MSB)
97	Group 22 Start track number of Primary Reserved Area (Next MSB)
98	Group 22 Start track number of Primary Reserved Area (Next LSB)
99	Group 22 Start track number of Primary Reserved Area (LSB)
100	Group 23 Start track number of Primary Reserved Area (MSB)
101	Group 23 Start track number of Primary Reserved Area (Next MSB)
102	Group 23 Start track number of Primary Reserved Area (Next LSB)
103	Group 23 Start track number of Primary Reserved Area (LSB)
104	Secondary Reserved Area Start track number (MSB)
105	Secondary Reserved Area Start track number (Next MSB)
106	Secondary Reserved Area Start track number (Next LSB)
107	Secondary Reserved Area Start track number (LSB)
108	Number of sectors in Secondary Reserved Area (MSB)
109	Number of sectors in Secondary Reserved Area (Next MSB)
110	Number of sectors in Secondary Reserved Area (Next LSB)
111	Number of sectors in Secondary Reserved Area (LSB)
112 to 119	Shall contain the name of the manufacturer of the optical drive initializing this cartridge
120 to 127	Shall contain the serial number or identifier of the optical drive initializing this cartridge or if not available (FF).
128 to 135	Shall contain the date and time of the initialization of this cartridge in the form: MM DD YY hh mm (two bytes each) or if not available (FF). *Note: In order to provide backward compatibility with previous generations of shipped media, the year "YY" shall continue to be encoded as follows: year 1998 as "98", year 1999 as "99", year 2000 as "00", year 2001 as "01", and so forth.*
136 to 143	Shall contain a random number generated by the optical drive initializing this cartridge. The drive manufacturer must insure that no two identifiers generated by a specific manufacturer's optical drive are identical - the inclusion of the manufacturer's name in the identifier will assure no identifiers will be identical among drive manufacturers.
144 to 2047	(FF)

© ISO/IEC 1999 – All rights reserved
Copyright International Organization for Standardization
Provided by IHS under license with ISO
No reproduction or networking permitted without license from IHS
Not for Resale

18.6 Write Once Read Many (WORM) Zone

Type WORM shall contain a Write-Once Zone. The Write Once Zone is intended for the user to write data into. The Data field of all sectors in this zone shall not contain any embossed data.

18.6.1 Location

The WORM Zone shall start from sector 0 of track 6 and extend to sector 7 of track 182 487.

18.6.2 Partitioning

During initialization of the disk, the WORM Zone shall be partitioned into 24 consecutive groups. Each of the groups within the user area is partitioned into a Data Area and a Primary Reserved Area (see table 8). Band 23 additionally contains the Secondary Reserved Area.

The Data Area is used for recording user data and the Primary Reserved Area is used for replacements of defective sectors found in the data area of this group and for write power calibration.

The Secondary Reserved Area is used for replacement of any defective sectors and for write power calibration when the sectors in the Primary Reserved Area of a particular group have been exhausted.

Table 8 shows the data start track for each group. The Primary and Secondary Reserved Area start track and number of reserved tracks are also shown.

19 Defect Management

Defective sectors on the disk shall be replaced by good sectors according to the defect management scheme described below, which uses pointers imbedded in the replacement sector.

19.1 Initialization of the disk

WORM media must be initialized before it is used. During initialization of the disks, the four DMAs are recorded and the WORM Zone is partitioned into 24 groups. See Table 8.

19.2 Defect Management Pointers.

The defect management scheme uses defect management pointers (DMPs). This field in the data block consists of 8 bytes denoted by $P_{x,y}$ (x=1,2 and y=1,2,3,4). The bytes are used to specify the relationship between a replacement sector and the replaced sector found defective. A defective sector is a sector for which the ECC or the CRC has detected erroneous data that cannot be corrected. This relationship is expressed by pointers. Table 11 below shows the format of a pointer $P_{x,y}$ (y=1,2,3,4).

Table 11 - Format of a DMP for WORM Media

Byte 1 ($P_{x,1}$)	Byte 2 ($P_{x,2}$)	Byte 3 ($P_{x,3}$)	Byte 4 ($P_{x,4}$)
MSB of track number	Next MSB of track number	LSB of track number	Sector number

There shall be two pointers ($P_{1,y,}$ and $P_{2,y,}$) in each sector. In each data area sector, the pointers shall be recorded as follows:

– Pointer $P_{1,y}$ is reserved, not specified by this International Standard, and ignored on interchange.

– Pointer $P_{2,y}$ is reserved, not specified by this International Standard, and ignored on interchange.

In each replacement sector, the pointers shall be recorded as follows:

– Pointer $P_{1,y}$ specifies the address of this sector.

– Pointer $P_{2,y}$ specifies the address of the defective sector.

In each calibration sector, the pointers shall be recorded as follows:

– Pointer $P_{1,y}$ is reserved, not specified by this International Standard, and ignored on interchange.

– Pointer $P_{2,y}$ is reserved, not specified by this International Standard, and ignored on interchange.

© ISO/IEC 1999 – All rights reserved

Copyright International Organization for Standardization
Provided by IHS under license with ISO
No reproduction or networking permitted without license from IHS
Not for Resale

19.3 Write procedure

When writing sectors in the Data Area of a group, the two DMPs of these sectors are written at the same time. The pointers $P_{1,y}$ and $P_{2,y}$ are not specified. If a data sector in a group is found to be defective, it will be rewritten in the first available spare sector of the Primary Reserved Area of this group.

If the reassignment fails, then the next available spare will be used to retry the reassignment. If a replacement sector is later found to be defective, the next available spare will be used as a replacement. In both cases, the DMP in the replacement sector shall contain the address of the original defective data area sector. If there are no spare sectors left in this group, the defective sector will be rewritten in the first available spare sector in the Secondary Reserved Area .

19.3.1 Read Procedure

If an uncorrectable read error occurs when reading any data sectors of a group, all of the written spare sectors of the Primary Reserved Area of the group must be searched for a replacement sector. If a replacement sector is not found in the Primary Reserved Area, then all of the written spare sectors of the Secondary Reserved Area must be searched. If a replacement sector is not found, a permanent read error has been encountered.

Section 4 - Characteristics of embossed information

20 Method of testing

The format of the embossed information on the disk is defined in clauses 13 to 18. Clauses 21 to 24 specify the requirements for the signals from grooves, Headers, embossed data, and Control Track PEP marks, as obtained when using the Reference Drive specified in clause 9.

Clauses 21 to 24 specify the average quality of the embossed information over the sector recorded according to the sector format defined in clause 15 and 16. Local deviations from the specified values, called defects, can cause tracking errors, erroneous Headers, or errors in the Data fields. These errors are covered in section 6.

20.1 Environment

All signals specified in clauses 21 to 24 shall be within their specified ranges with the cartridge in any environment in the range of allowed operating environments defined in 8.1.2.

20.2 Use of the Reference Drive

All signals specified in clauses 21 to 24 shall be measured in the indicated channels of the Reference Drive. The drive shall have the following characteristics for the purpose of these tests.

20.2.1 Optics and mechanics

The focused optical beam shall have the properties defined in 9.2 a) to f). The disk shall rotate as specified in 9.5.

20.2.2 Read power

The read power is the optical power incident at the entrance surface, used when reading, and is specified as follows for the stated zones (see clause 17):

a) PEP Zone

The read power shall not exceed the value specified in 17.3.

b) SFP Zone

The read power shall be in the range given in byte 6 of the PEP Zone (see 17.3.2.1.4). The test read power shall be 1,0 mW.

c) User zone

The read power shall be in the range given in byte 21 of the SFP Zone (see 17.4.2). The test read power shall be 1,0 mW.

20.2.3 Read channels

The drive shall have a read Channel, in which the total amount of light in the exit pupil of the objective lens is measured. This Channel shall have the implementation as given by Channel 1 in 9.1.

--`,,```,,,,````-`-`,,`,,`,`,,`---
© ISO/IEC 1999 – All rights reserved
Copyright International Organization for Standardization
Provided by IHS under license with ISO
No reproduction or networking permitted without license from IHS
Not for Resale

20.2.4 Tracking

During the measurement of the signals, the focus of the optical beam shall have an axial deviation of not more than

$$e_{max}\,(\text{axial}) = 0{,}7\ \mu\text{m}$$

from the recording layer, and it shall have a radial deviation of not more than

$$e_{max}\,(\text{radial}) = 0{,}09\ \mu\text{m}$$

from the centre of a track.

20.3 Definition of signals

Figure 23 shows the signals specified in clauses 21 to 24.

All signals are linearly related to currents through a photodiode detector, and are therefore linearly related to the optical power falling on the detector.

I_1 and I_2 are the outputs of the two halves of the split photodiode detector in the Tracking Channel (see 9.1 and figure 23a).

Channel 1 is the sum of the two photo detectors in the optical system (see 9.1) as processed by the bottom-hold circuit and low pass filters described in annex P. I_{IG} and I_{OL} indicate the maximum and minimum signals of Channel 1, respectively, when the beam crosses the tracks in grooved areas without embossed recording fields. I_{bhmax} and I_{bhmin} indicate the maximum and minimum signals of the lower envelope of Channel 1, respectively, when the beam crosses the tracks in areas containing embossed Headers and embossed recording fields (see figure 23b).

© ISO/IEC 1999 – All rights reserved

Copyright International Organization for Standardization
Provided by IHS under license with ISO
No reproduction or networking permitted without license from IHS
Not for Resale

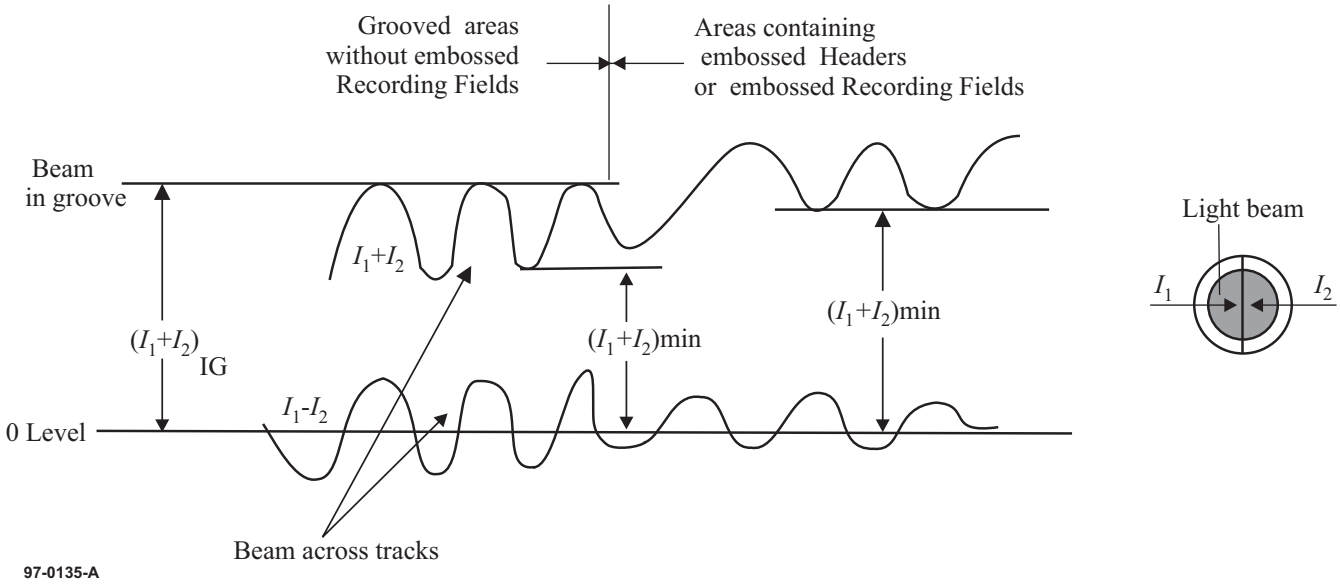

Figure 23a - Signals from grooves in the Tracking Channel

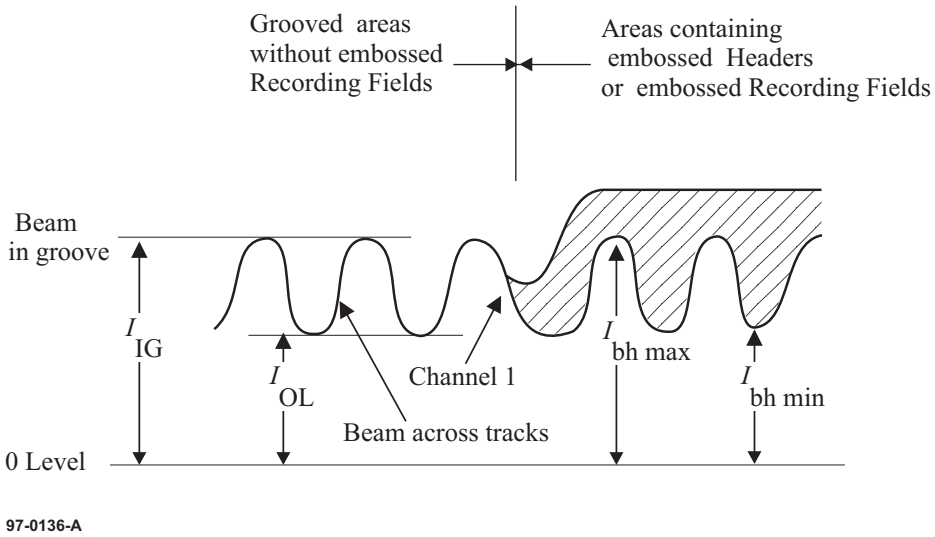

Figure 23b - Signals from grooves in Channel 1

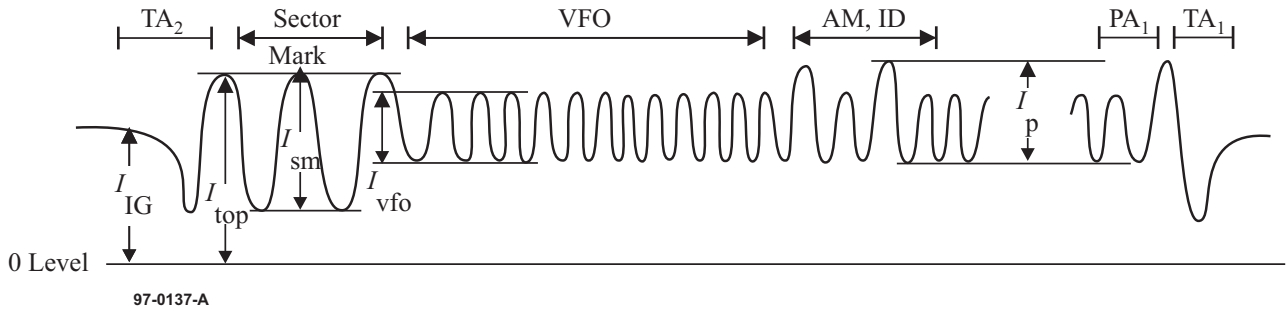

Figure 23c - Signals from Headers in Channel 1

Figure 23 - Illustration of the various parameters for read characteristics

© ISO/IEC 1999 – All rights reserved
Copyright International Organization for Standardization
Provided by IHS under license with ISO
No reproduction or networking permitted without license from IHS
Not for Resale

21 Signal from grooves

The signals ($I_1 + I_2$) and ($I_1 - I_2$) shall be filtered using a 5th order Bessel filter with a cut off frequency of 1,0 MHz such that frequencies above 1,0 MHz are attenuated thereby eliminating the effect of modulation due to embossed marks.

21.1 Cross-track signal

The cross-track signal is the sinusoidal sum signal Channel 1 in the Read Channel, when the focus of the optical beam crosses the tracks. The signal can be used by the drive to locate the centre of the tracks. The peak-to-peak value of the cross-track signal shall meet the following requirements when measured according to annex P:

a) The peak-to-peak value of the upper envelope of the cross-track signal in areas containing embossed Headers and embossed Recording fields:

$$0{,}01 \leq (I_{bhmax} - I_{bhmin}) / (I_{bhmax}) \leq 0{,}30$$

Over the whole disk this ratio shall not vary by more than 3 dB in areas containing embossed Headers and embossed Recording fields.

b) The peak-to-peak value of the cross-track signal in grooved areas in the Formatted Zone without embossed Recording fields:

$$0{,}01 \leq (I_{OL} - I_{OG})/I_{IG} \leq 0{,}30$$

Over the whole disk this ratio shall not vary by more than 3 dB in areas without embossed Recording fields.

21.2 Push-pull signal

The push-pull signal is the sinusoidal difference signal ($I_1 - I_2$) in the Tracking Channel, when the focus of the optical beam crosses the tracks. The signal can be used by the drive for radial tracking. The peak-to-peak value of the push-pull signal shall meet the following requirements

a) in areas containing embossed Headers and embossed Recording fields:

$$0{,}10 \leq (I_1\text{-}I_2)_{pp} / (I_1 + I_2)_{IG} \leq 0{,}30$$

b) in grooved areas in the Formatted Zone without embossed Recording fields:

$$0{,}25 \leq (I_1\text{-}I_2)_{pp} / (I_1 + I_2)_{IG} \leq 0{,}6$$

where $(I_1 - I_2)_{pp}$ is the peak-to-peak amplitude of the differential output of the two halves of the split photodiode detector in the Tracking Channel, and $(I_1 + I_2)_{IG}$ is the signal measured in-groove.

21.3 Divided push-pull signal

The first term of the divided push-pull signal is the peak-to-peak amplitude derived from the instantaneous level of the differential output ($I_1 - I_2$) from the split photodiode detector when the light beam crosses the unrecorded or embossed recording fields of grooved tracks divided by the instantaneous level of the sum output ($I_1 + I_2$) from the split photodiode detector when the light beam crosses these areas.

The second term of the divided push-pull signal is the ratio of the minimum peak-to-peak amplitude derived from the instantaneous level of the differential output ($I_1 - I_2$) divided by the instantaneous level of the sum output ($I_1 + I_2$) from the split photodiode detector when the light beam crosses embossed Recording fields of grooved tracks to maximum peak-to-peak amplitude derived from the instantaneous level of the differential output ($I_1 - I_2$) divided by the instantaneous level of the sum output ($I_1 + I_2$) from the split photodiode detector when the light beam crosses the pre-formatted data area of grooved tracks.

The split photodiode detector separator shall be parallel to the projected track axis. In this measurement, the I_1 and I_2 signals shall be provided by the split photodiode detector. The tracking servo shall be operating in open-loop mode during this measurement.

The first term shall meet the following requirements in areas containing embossed Headers and embossed Recording fields:

$$0{,}12 \leq [(I_1 - I_2)/(I_1 + I_2)]_{pp} \leq 0{,}40$$

The first term shall meet the following requirements in grooved areas without embossed data fields:

$$0{,}35 \leq [(I_1 - I_2)/(I_1 + I_2)]_{pp} \leq 0{,}70$$

© ISO/IEC 1999 – All rights reserved

Copyright International Organization for Standardization
Provided by IHS under license with ISO
No reproduction or networking permitted without license from IHS
Not for Resale

The second term shall satisfy the following requirements in areas containing embossed Headers and embossed Recording fields:

$$[(I_1 - I_2)/(I_1 + I_2)]_{ppmin} / [(I_1 - I_2)/(I_1 + I_2)]_{ppmax} \geq 0{,}20$$

The second term shall satisfy the following requirements in areas without embossed Recording fields:

$$[(I_1 - I_2)/(I_1 + I_2)]_{ppmin} / [(I_1 - I_2)/(I_1 + I_2)]_{ppmax} \geq 0{,}70$$

21.4 Phase depth

The phase depth of the grooves equals

$$\frac{n \times d}{\lambda} \times 360^{\circ}$$

where:

n is the index of refraction of the substrate

d is the groove depth

λ is the wavelength

The phase depth shall be less than 180°.

21.5 Track location

The tracks are located at those places on the disk where $(I_1 - I_2)$ equals zero and $(I_1 + I_2)$ has its maximum value.

22 Signals from Headers

The signal obtained from the embossed Headers shall be measured in Channel 1 of the Reference Drive.

The signal from an embossed mark in the recording layer is defined as the peak-to-peak value of the modulation of the signal in Channel l caused by the mark when the beam follows a recorded track (see figure 23c).

22.1 Sector Mark Signals

I_{top} is the peak level of the Sector Mark and shall meet the following requirement

$$0{,}07 \leq I_{top} \leq 0{,}30$$

The signal I_{sm} from the Sector Mark shall meet the requirement

$$0{,}30 \leq I_{sm}/I_{top} \leq 0{,}65$$

22.2 VFO signals

The signal I_{vfo} from the marks in the VFO_1 and VFO_2 fields shall meet the requirement

$$0{,}08 \leq I_{vfo} / I_{top} \leq 0{,}25$$

In addition, the condition

$$I_{vfo}/I_{pmax} \geq = 0{,}20$$

shall be satisfied within each sector, where I_{pmax} is the signal with maximum amplitude in that sector from embossed mark signals of I_p defined in 22.3 and I_{vfo} is the peak-to-peak amplitude of the read signal from the VFO area.

22.3 Address Mark, ID and PA signals

The signal I_p from the marks in these fields shall meet the requirements

$$0{,}08 \leq I_p / I_{top} \leq 0{,}65$$

$$\frac{I_{p\,min}}{I_{p\,max}} \geq 0{,}20$$

© ISO/IEC 1999 – All rights reserved
Copyright International Organization for Standardization
Provided by IHS under license with ISO
No reproduction or networking permitted without license from IHS
Not for Resale

The second requirement applies over any Header. I_{pmin} and I_{pmax} are the signals with minimum and maximum amplitude in those fields.

22.4 Timing jitter

The header signal shall be read and detected using the read Channel circuit defined in annex H under the conditions specified in 20.2.2. The timing jitter *Jt*(H) shall be measured according to the procedure in annex J and shall meet the following requirements:

$$Jt(H) \leq 0{,}10\ T$$

where T is the Channel clock period, *Jt*(H) is the standard deviation (sigma) of the length in time of the leading-to-leading and trailing-to-trailing edges for each *n*T period. The ideal length corresponds to *n* Channel bit times T. *Jt* is illustrated in figure J.1. All the time interval samples detected from the Header signals on the recording layer shall satisfy the condition of *Jt*(H).

22.5 Asymmetry

Asymmetry is the deviation between the centre levels of the signals which give maximum and minimum amplitudes I_{pmax} and I_{pmin} in Address Mark, ID and PA fields (see annex Q) and shall be in the range of ± 0,15.

23 Signals from embossed Recording fields

23.1 Signal amplitude

If the disk has an Embossed Zone, the Recording fields of all sectors in this zone shall contain embossed marks. The signals from these marks shall be measured in Channel 1 (see 9.1). Acceptable defects of the marks are specified in section 6. The signal from all embossed Recording fields is defined as the peak-to-peak value of the modulation of the signal.

The signal I_p from marks in the Recording fields of the Embossed Zone shall meet the following requirements:

$$0{,}08 \leq I_p / I_{top} \leq 0{,}65$$

$$\frac{I_{pmin}}{I_{pmax}} \geq 0{,}2$$

The last requirement applies over Recording fields. I_{pmin} and I_{pmax} are the signals with minimum and maximum amplitude in the Recording field of a sector.

23.2 Asymmetry

Asymmetry is the deviation between the centre levels of the signals which give maximum and minimum amplitudes I_{pmax} and I_{pmin} in embossed Recording fields (see annex Q) and shall be in the range of ± 0,15.

23.3 Timing Jitter

The embossed data signal shall be read and detected using the read Channel circuit defined in annex H under the conditions specified in 20.2.2. The timing jitter Jt_d shall be measured according to the procedure in annex J and shall meet the following requirements:

$$Jt_d \leq 0{,}10\ T$$

where T is the Channel clock period, Jt_d is the standard deviation (sigma) of the length in time of the leading-to-leading and trailing-to-trailing edges for each *n* T period. *Jt* is illustrated in annex J, figure J.1.

All the time interval samples detected from the embossed data signals on the recording layer shall satisfy the former conditions of Jt_d.

23.4 Byte Errors

The embossed data in a sector as read in Channel 1 shall not contain any byte errors that cannot be corrected by the error correction defined in 29.2.7.

24 Signals from Control Track PEP marks

The density of tracks and the shape of marks in the PEP Zone shall be such that the cross-track loss meets the requirement

© ISO/IEC 1999 – All rights reserved

Copyright International Organization for Standardization
Provided by IHS under license with ISO
No reproduction or networking permitted without license from IHS
Not for Resale

$$\frac{I_{\text{m max}}}{I_{\text{m min}}} \leq 2{,}0$$

The signal I is obtained from Channel 1 (see 9.1). The signal I_{m} is the maximum amplitude in a group of three successive marks. I_{mmax} is the maximum value and I_{mmin} is the minimum value of I_{m} obtained over one physical track of the PEP Zone. I_{mmax} shall be greater than 0,2 I_{o}, where I_{o} is the signal obtained from Channel 1 in an unrecorded ungrooved area. The effect of defects shall be ignored.

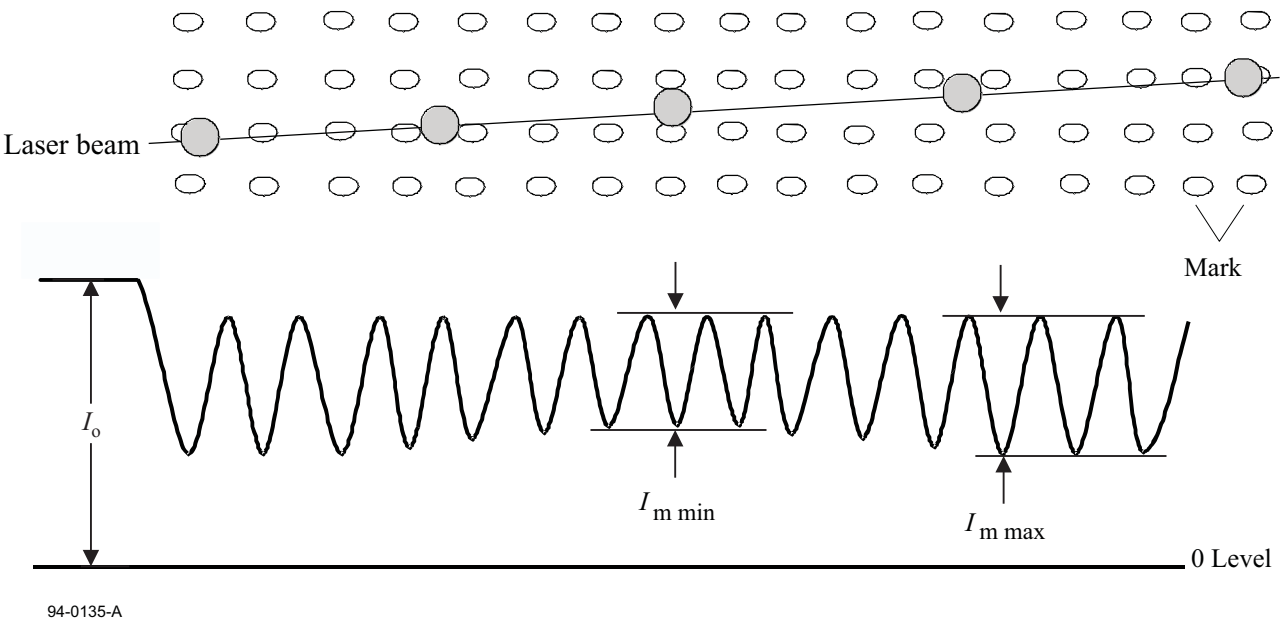

Figure 24 - Path of the laser beam when crossing tracks and the resulting PEP signals

Section 5 - Characteristics of the recording layer

25 Method of testing

Clauses 26 to 28 describe a series of tests to assess the properties of the Recording layer, as used for writing and reading data. The tests shall be performed in the Recording field of the sectors in the WORM Zone. The write and read operations necessary for the tests shall be made on the same Reference Drive.

Clauses 26 to 28 specify only the average quality of the recording layer. Local deviations from the specified values, called defects, can cause write problems. These defects are covered in section 6.

25.1 Environment

All signals in clauses 26 to 28 shall be within their specified ranges with the cartridge in any environment in the range of allowed operating environments defined in 8.1.2

25.2 Reference Drive

The write tests described in clauses 26 to 28 shall be measured in Channel 1 of the Reference Drive. The drive shall have the following characteristics for the purpose of these tests.

25.2.1 Optics and mechanics

The focused optical beam shall have the properties defined in 9.2 a) to f). The disk shall rotate as specified in 9.5.

25.2.2 Read power

The optical power incident on the entrance surface of the disk and used for reading the information shall be in the range specified in 20.2.2.

© ISO/IEC 1999 – All rights reserved
Copyright International Organization for Standardization
Provided by IHS under license with ISO
No reproduction or networking permitted without license from IHS
Not for Resale

25.2.3 Read Channel

The Reference Drive shall have a Read Channel which can detect marks in the recording layer. This Channel shall have an implementation equivalent to that given by Channel 1 in 9.3

The edge positions in time shall be measured for testing purposes by a threshold detection method. The threshold value is referenced to the centre of the peak-to-peak envelope of the readback signal. The positive peak and negative peak signals of the envelope circuit (see annex L) shall each contain a single pole filter with a -3 dB roll-off point at 50 kHz.

Nominally the threshold value shall be zero if the laser power calibration is perfect and there are no parameter variations. However, in some measurements the threshold value may have to be adjusted to minimize the effects of mark size changes due to parameter variations during writing.

25.2.4 Tracking

During the measurement of the signals, the focus of the optical beam shall follow the tracks as specified in 20.2.4.

25.2.5 Signal detection for testing purposes

The signal from the Read Channel is not equalized before detection. The signal shall be rolled off with a 3-pole Butterworth filter with a cut-off frequency of half the Channel clock frequency of the band being tested. All read testing is performed at 3 000 rpm.

Nominally the threshold value shall be zero if the laser power calibration is perfect and there are no parameter variations. However, in some measurements the threshold value may have to be adjusted to minimize the effects of mark size changes due to parameter variations during writing.

25.3 Write conditions

The requirement for all tests shall be met over the operating environment except where otherwise noted.

25.3.1 Write pulse and power

Marks are recorded on the disk by pulses of optical power superimposed onto a specified bias power P_b = 0,5 mW ± 0,1 mW at the test rotational frequency.

The test pulse trains are defined as follows for marks of length 2T through 8T.

2T marks are formed with a single 1,5T pulse of power W_s superimposed into the bias power P_b. The initial 2T portion of marks longer than 2T is formed with a 1,5T pulse of power W_s, with the incremental T lengths each being formed by the combination of a 0,5T (P_b) and 0,5T (W_p) pair, where P_b=Bias Power, W_p=Write Peak Power, and W_s=Write Subpeak Power. The relationship of W_s: W_p = 0,75:1,0.

For mark lengths 2T to 8T, the pulse trains are as follows:

2T : 1,0T(P_b)1,5T(W_s)1,0T(P_b)

3T : 1,0T(P_b)1,5T(W_s)0,5T(P_b)0,5T(W_p)1,0T(P_b)

4T : 1,0T(P_b)1,5T(W_s)0,5T(P_b)0,5T(W_p)0,5T(P_b)0,5T(W_p)1,0T(P_b)

5T : 1,0T(P_b)1,5/(W_s)0,5T(W_p)0,5T(P_b)0,5T(W_p)0,5T(P_b)0,5T(W_p)1,0T(P_b)

6T : 1,0T(P_b)1,5T(W_s)0,5T(P_b)0,5T(W_p)0,5T(P_b)0,5T(Wp)0,5T(P_b)0,5T(W_p)1,0T(P_b)

7T : 1,0T(P_b)1,5T(W_s)0,5T(P_b)0,5T(W_p)0,5T(P_b)0,5T(W_p)0,5T(P_b)0,5T(W_p)0,5T(P_b)0,5T(W_p)1,0T(P_b)

8T : 1,0T(P_b)1,5T(W_s)0,5T(P_b)0,5T(W_p)0,5T(P_b)0,5T(W_p)0,5T(P_b)0,5T(W_p)0,5T(P_b)0,5T(W_p)
0,5T(P_b) 0,5T(W_p)0,5T(P_b)0,5T(W_p)1,0T(P_b)

The generalized pulse train for the purpose of testing is shown graphically in annex K.

Individual pulses shall have 10% to 90% rise and fall times of less than 3 ns.

The measurement of laser power shall be done in pulsed operation by averaging, for example, one pulse every 50 ns, using a sperical radiometer. The averaging method of measuring the laser power will minimize the accumulation of pulse width and pulse amplitude tolerances.

The values W_p and W_s used in any media tests shall be the ones measured for that particular piece of media using the method in 25.3.2. Values within 5% of W_p and W_s that were measured by the media manufacturer at 30 mm, 45 mm, and 60 mm on their typical media shall be recorded in the SFP zone.

--`,,```,,,,````-`-`,,`,,`,`,,`---
© ISO/IEC 1999 – All rights reserved
Copyright International Organization for Standardization
Provided by IHS under license with ISO
No reproduction or networking permitted without license from IHS
Not for Resale

25.3.2 Pulse power determination

The following procedures shall be used by the media manufacturer to measure the values of W_s and W_p that are recorded in the SFP zone. These powers are specified in the SFP zone as 2T and 4T powers. The 2T and 4T marks are formed using the pulse patters described in 25.3.1.

Write several tracks at 30 mm, 45 mm and 60 mm radii of the disk under test by repeatedly writing the following test pattern. Fix the value of W_s to be equal to 75% of the value of W_p in all cases.

Run length:	2T	6T	4T	6T
Mark or space:	M	S	M	S

Read and detect the readback signal with the detection method given in 25.2.5. Adjust focus for maximum readback signal amplitude of the 2T mark and set the threshold value at 50% of the peak-to-peak signal amplitude from the 4T mark for the test.

Measure the average distance between the edges, namely L2, L4 and L6 for the 2T, 4T and 6T runs respectively, using a time interval analyzer repeated for 30 mm, 45 mm and 60 mm radii. Averaging should be done using 10 s independent time interval samples on several tracks at each radial position.

Adjust the powers W_s and W_p so that L6 is as close to 6T as possible. Choose the W_p and W_s to be recorded in the SFP zone as those powers which cause L6 to be decreasing with increasing laser power.

Recording shall be done at a media temperature of 25 °C ± 1 °C, at the test RPM.

25.3.3 Media power sensitivity

The pulse power W_p is the upper bound of the power required to form 4T marks as a function of pulse duration T_p. W_p is given by the reciprocity relationship:

$$W_p = C\left(\frac{1}{T_p} + \frac{1}{\sqrt{T_p}}\right) \text{mW}$$

where $T_p = 1{,}25\text{T} = \dfrac{1{,}5\text{T} + 0{,}5\text{T} + 0{,}5\text{T}}{2}$

The following formula shall be used by the media manufacturer to measure the value of the media power sensitivity C using the T_p and W_p data from 25.3.2:

$$C = W_p \frac{T_p\sqrt{T_p}}{T_p + \sqrt{T_p}}$$

The value for C shall be less than 65 at radii 30 mm, 45 mm, and 60 mm.

26 Write characteristics

26.1 Resolution

I_L is the peak-to-peak value of the signal obtained in Channel 1 (see 9.2) from 4T marks and 4T spaces written under any of the conditions given in 25.3, and read under the conditions specified in 20.2.2 c).

I_H is the peak-to-peak value of the signal obtained in Channel 1 from 2T marks and 2T spaces written under the conditions given in 25.3, the lowest interval allowed by the RLL(1,7) code for each zone ± 0,1 MHz, and read under the condition specified in 20.2.2 c).

The resolution I_H/I_L (see figure 25) shall not be less than 0,18 within any sector. It shall not vary by more than ± 0,10 over a track.

© ISO/IEC 1999 – All rights reserved
Copyright International Organization for Standardization
Provided by IHS under license with ISO
No reproduction or networking permitted without license from IHS
Not for Resale

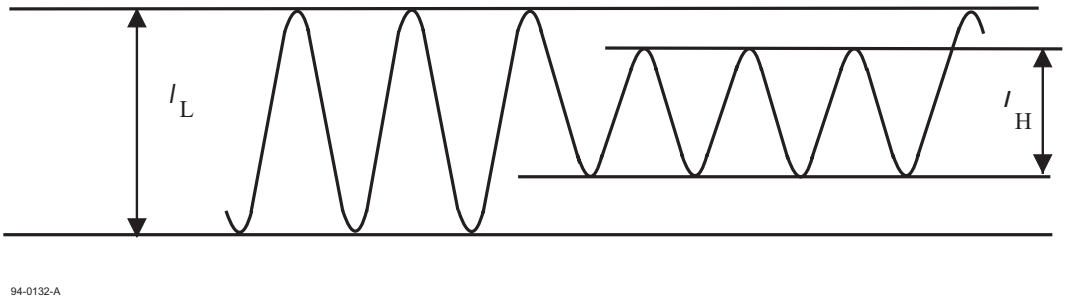

Figure 25 - Definition of I_L and I_H

26.2 Narrow-band signal-to-noise ratio

The narrow-band signal-to-noise ratio is the ratio of the signal level to the noise level of a specified pattern, measured in a 30 kHz bandwidth. It shall be determined as follows.

Write a series of 2T marks followed by 2T spaces in the Recording field of a series of sectors at a frequency f_0 of the highest frequency allowed by the RLL(1,7) code for each zone ± 0,1 MHz. The write conditions shall be as specified in 25.3.1.

Read the Recording fields in Channel 1 with the Read Channel specified in annex H under the conditions specified in 25.2 using a spectrum analyzer with a bandwidth of 30 kHz. Measure the amplitudes of the signal and the noise at the frequency f_0 as indicated in figure 26. The measurements shall be corrected for the effect of the Header fields and for any instrumentation error in order to obtain the value for the Recording field only.

The narrow- band signal-to-noise ratio is

$$20 \log_{10} \frac{\text{signal level}}{\text{noise level}}$$

The narrow band signal-to-noise ratio shall be greater than 45 dB for all tracks in any sector in the User Zone for all phase differences between -15° and +15° in the optical system as defined in 9.1.

NOTE - It is permitted to use a spectrum analyzer with a bandwidth of 3 kHz and to convert the measured value to that for a 30 kHz value.

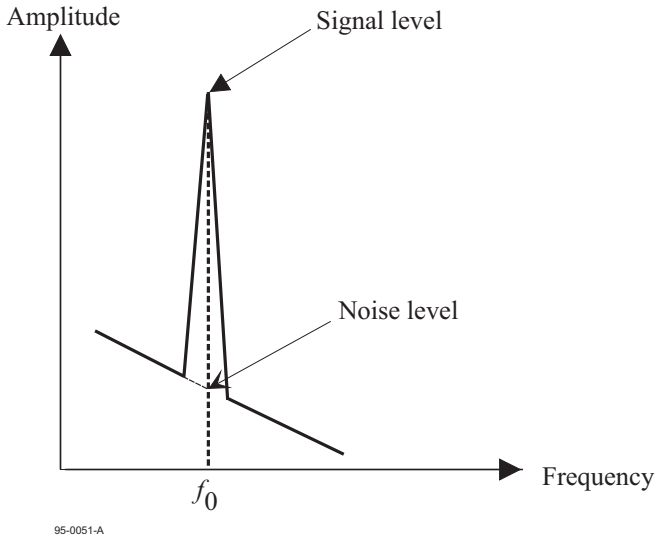

Figure 26 - Amplitude versus frequency

26.3 Cross-talk ratio

The cross-talk ratio definition and measurement procedure describe the entities to be measured in terms of physical tracks. These physical tracks can consist of one or more logical tracks (see 13). The number of logical tracks involved in the measurement must be adjusted for the Band in which the measurement is made.

© ISO/IEC 1999 – All rights reserved

Copyright International Organization for Standardization
Provided by IHS under license with ISO
No reproduction or networking permitted without license from IHS
Not for Resale

26.3.1 Track test method

For tracks the test on cross-talk shall be carried out on any group of five adjacent unrecorded physical tracks, designated (*n*-2), (*n*-1), *n*, (*n*+1), (*n*+2), in the WORM Zone.

Write a series of 2T marks followed by 2T spaces at a frequency f_1 for each zone ± 0,1 MHz in the Recording field of the sectors in track *n*. The write conditions shall be as specified in 25.3.

Read the Recording fields of the sectors in the tracks (*n*-1), *n* and (*n*+1) under the conditions specified in 25.2.2 and 25.2.3.

The cross-talk from a track *n* to track (*n*-1) and to track (*n*+1) shall be lower than -26 dB.

26.4 Timing Jitter

The timing jitter can be obtained from the TIA data in 25.3.3 with the equalizer defined in annex M. Measure the length in time of the leading-to-leading and trailing-to-trailing edges of the detected data from the 2T mark (L2) followed by 6T space (L6), and 6T space (L6) followed by 2T mark (L2) with TIA. The measurements shall be made using 105 independent time interval samples on several tracks at each radial location.

The value of timing jitter (due to the media) shall be less than 10 % of the time period T of one channel bit for 30 mm, 45 mm and 60 mm radii.

Section 6 - Characteristics of user data

27 Method of testing

Clauses 29 and 30 describe a series of measurements to test conformance of the user data on the disk with this International Standard. It checks the legibility of both embossed and user-written data. The data is assumed to be arbitrary. The user-written data may have been written by any drive in any environment. The read tests shall be performed on the Reference Drive.

Whereas clauses 20 to 28 disregard defects, clauses 29 and 30 include them as unavoidable deterioration of the read signals. The gravity of a defect is determined by the correctability of the ensuing errors by the Error Detection and Correction circuit in the read Channel defined below. The requirements in clauses 29 and 30 define a minimum quality of the data, necessary for data interchange.

27.1 Environment

All signals specified in clauses 29 and 30 shall be within their specified ranges with the cartridge in any environment in the range of allowed operating environments defined in 8.1.2. It is recommended that before testing the entrance surface of the optical disk shall be cleaned according to the instructions of the manufacturer of the disk.

27.2 Reference Drive

All signals specified in clauses 29 and 30 shall be measured in the indicated Channels of the Reference Drive. The drive shall have the following characteristics for the purpose of these tests:

27.2.1 Optics and mechanics

The focused optical beam shall have the properties specified in 9.2 a) to f). The disk shall rotate as specified in 9.5.

27.2.2 Read power

The optical power incident on the entrance surface of the disk (used for reading the information) shall be in the range specified in 20.2.2.

27.2.3 Read amplifiers

The read amplifiers after the photodiode detectors in Channels 1 and 2 shall be as specified in 9.3.

27.2.4 Mark Quality

The signals from both read amplifiers shall be converted from analog to binary with an edge detector as defined in annex H. The output signals from Channel 1 shall be filtered without equalization with the specified low-pass filter, and compared with their threshold levels of the comparator which shall be between 0,25 and 0,75 for the threshold fractional values. The threshold levels shall be adjusted to minimize the maximum offset (or bias) of the mark and space intervals from their desired (or true) values of 2T, 3T, ..., 7T, 8T. The output signals from the comparator are converted to binary signals with the edge detector.

The timing jitter in this section is defined as the standard deviation of the separately measured 2T to 8T mark and space intervals excluding outlying observations by defects, using a time interval analyzer with the output signals from the edge detector of the marks and spaces in a sector. Therefore, independent interval samples for this measurement are limited by the number of marks and spaces in a sector. The timing jitters shall be expressed as a percentage of Channel bit time T.

© ISO/IEC 1999 – All rights reserved
Copyright International Organization for Standardization
Provided by IHS under license with ISO
No reproduction or networking permitted without license from IHS
Not for Resale

The converter for Channel 1 shall operate correctly for analog signals from embossed marks with amplitudes as determined by clauses 22 and 23.

The converter for Channel 1 shall also operate correctly for analog signals from user-written marks with an amplitude as determined by clause 25.

27.2.5 Channel bit clock

The signals from the analog-to-binary converters shall be virtually locked to the Channel bit clock/clocks which provides/provide the Channel bit windows of 0,70T effective width for timing the leading and/or trailing edges of the binary signals. Channel bit clock/clocks shall be adjusted in order to minimize the accumulated value/values of the timing errors of the leading to leading, leading to trailing, trailing to leading, and trailing to trailing edges from the Channel bit clock/clocks.

27.2.6 Binary-to-digital converters

The binary signals shall be correctly converted to the data bytes with the binary-to-digital converters based on the sector format and the recording code defined in clauses 15 and 16.

27.2.7 Error correction

Correction of errors in the data bytes shall be carried out by an error detection and correction system based on the definition in F.2 and F.3 of annex F. There shall be an additional correction system for the embossed data, based on the parity sectors as defined in 18.7.3.

27.2.8 Tracking

During measurement of the signals, the focus of the optical beam shall follow the tracks as specified in 20.2.4.

28 Minimum quality of a sector

This clause specifies the minimum quality of the Header and Recording field of a sector as required for interchange of the data contained in that sector. The quality shall be measured on the Reference Drive specified in 27.2.

A byte error occurs when one or more bits in a byte have a wrong setting, as detected by ECC and/or CRC circuits.

28.1 Headers

28.1.1 Sector Mark

At least three of the five long marks of the Sector Mark shall have the timing specified in 15.2 and the signals shall have the amplitude specified in 22.1.

28.1.2 ID fields

At least one of the two ID fields in a Header read in Channel 1 shall not have any byte errors, as checked by the CRC in the field.

28.2 User-written data

28.2.1 Recording field

The flag field shall start at 60 Channel bits ± 6 Channel bits from the end of the pre-formatted header. If an ALPC field is recorded, it shall start 144 Channel bits ± 6 Channel bits from the end of the pre-formatted header. The VFO_3 field shall start at 216 Channel bits ± 6 Channel bits from the end of the pre-formatted header and shall end at 240 Channel bits ± 84 Channel bits from the end of the sector.

The recording marks in a sector shall start 264 +/-84 Channel bits from the end of the sector.

28.2.2 Byte errors

The user-written data in a sector as read in Channel 1 shall not contain any byte errors that cannot be corrected by the error correction defined in 27.2.7.

28.2.3 Timing jitter

The user-written marks in a sector as read in Channel 1 shall have timing jitters due to the media less than 10% of the time period T of one Channel bit.

© ISO/IEC 1999 – All rights reserved

Copyright International Organization for Standardization
Provided by IHS under license with ISO
No reproduction or networking permitted without license from IHS
Not for Resale

29 Data interchange requirements

A disk offered for interchange of data shall comply with the following requirements (see annex M.)

29.1 Tracking

The focus of the optical beam shall not jump tracks unintentionally.

29.2 User-written data

Any sector written in the WORM Zone that does not comply with 28.2 shall have been replaced according to the rules of the defect management as defined in clause 19.

29.3 Quality of disk

The quality of the disk is reflected in the number of replaced sectors in the WORM Zone. This International Standard allows a maximum of 10 000 replaced sectors per side (see 19).

© ISO/IEC 1999 – All rights reserved
Copyright International Organization for Standardization
Provided by IHS under license with ISO
No reproduction or networking permitted without license from IHS
Not for Resale

Annex A

(normative)

Air cleanliness class 100 000

The classification of air cleanliness is based on a particle count with a maximum allowable number of specified minimum sized particles per unit volume, and on a statistical average particle size distribution.

A.1 Definition

The particle count shall not exceed a total of 3 500 000 particles per cubic metre of a size 0,5 μm and larger.

The statistical average particle size distribution is given in figure A.1. Class 100 000 means that 3 500 000 particles per cubic metre of a size of 0,5 μm and larger are allowed, but only 25 000 particles per cubic metre of a size of 5,0 μm and larger.

It shall be recognized that single sample distribution may deviate from this curve because of local or temporary conditions. Counts below 350 000 particles per cubic metre are unreliable except when a large number of a samplings is taken.

A.2 Test method

For particles of size in the range of 0,5 μm to 5,0 μm, equipment employing light-scattering principles shall be used. The air in the controlled environment is sampled at a known flow rate. Particles contained in the sampled air are passed through an illuminated sensing zone in the optical chamber of the instrument. Light scattered by individual particles is received by a photo detector which converts the light pulses into electrical current pulses. An electronic system relates the pulse height to particle size and counts the pulses such that the number of particles in relation to particle size is registered or displayed.

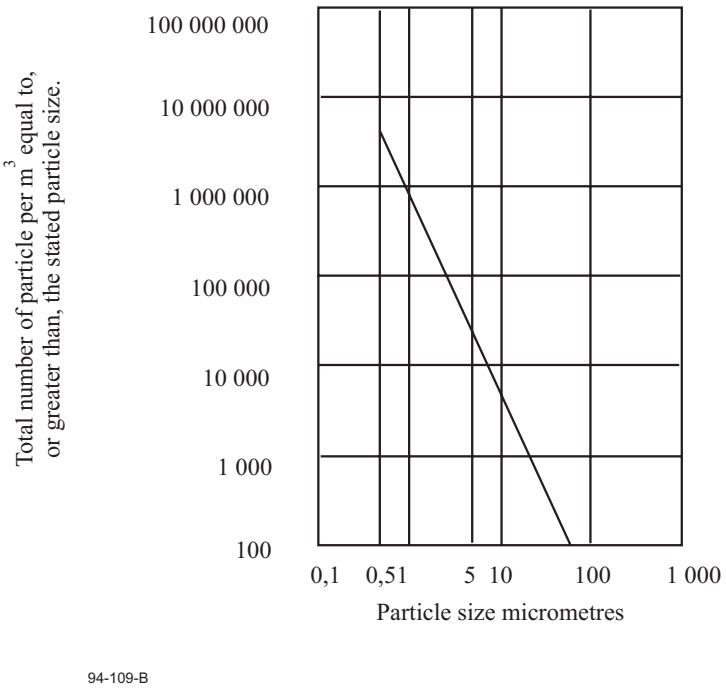

Figure A.1 - Particle size distribution curve

© ISO/IEC 1999 – All rights reserved
Copyright International Organization for Standardization
Provided by IHS under license with ISO
No reproduction or networking permitted without license from IHS
Not for Resale

Annex B

(normative)

Edge distortion test

B.1 The distortion test checks if the case is free from unacceptable distortion and protrusions along its edges. The test is made by causing the cartridge to pass through the vertical slot of a gauge while applying a specified force in addition to the gravitational pull.

B.2 The gauge shall be made of a suitable material, e.g. of chrome-plated carbon steel. The inner surfaces shall be polished to a surface finish of 5 μm peak-to-peak.

B.3 The dimensions shall be as follows (see figure B.1):

A = 155,0 mm

B = 136,0 mm ± 0,1 mm

C = 10,0 mm ± 0,1 mm

D = 11,40 mm ± 0,01 mm

E = 11,60 mm min.

B.4 When the cartridge is inserted vertically into the gauge, a vertical downward force F of 2,7 N maximum, applied to the centre of the top edge of the cartridge, shall cause the cartridge to pass through the gauge.

--`,,```,,,,````-`-`,,`,,`,`,,`---

© ISO/IEC 1999 – All rights reserved
Copyright International Organization for Standardization
Provided by IHS under license with ISO
No reproduction or networking permitted without license from IHS
Not for Resale

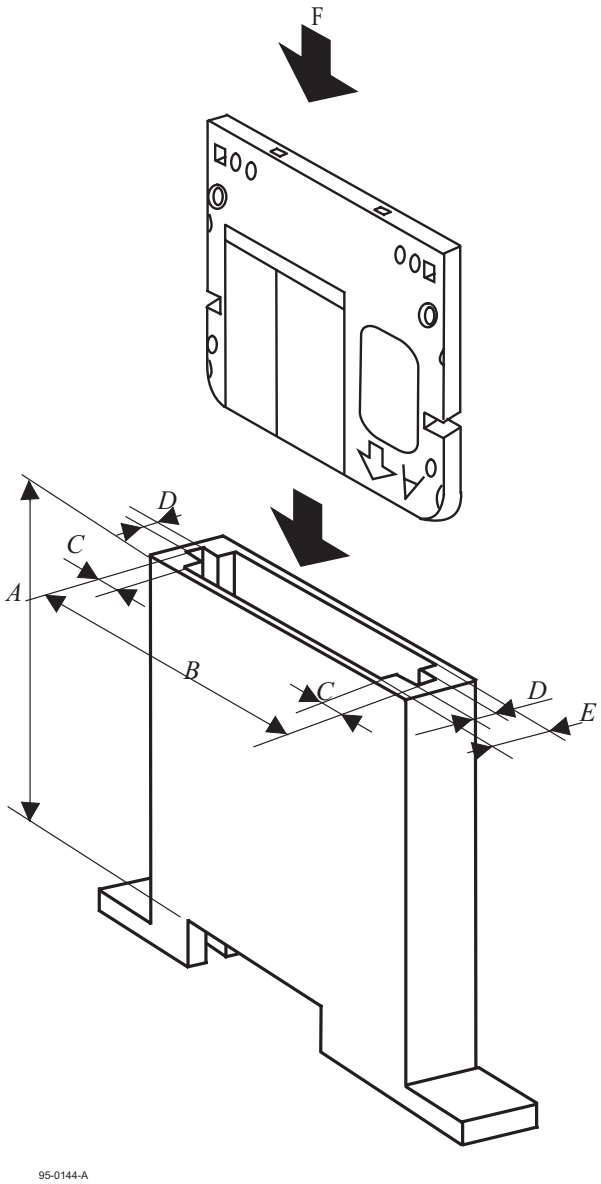

Figure B.1 - Distortion gauge

© ISO/IEC 1999 – All rights reserved
Copyright International Organization for Standardization
Provided by IHS under license with ISO
No reproduction or networking permitted without license from IHS
Not for Resale

Annex C

(normative)

Compliance test

C.1 The compliance test checks the flatness and flexibility of the case by forcing the four reference surfaces of the cartridge into a plane.

C.2 The location of the four reference surfaces S1, S2, S3 and S4 is defined in clause 10.5.4 and figure 5.

C.3 The test gauge consists of a base plate on which four posts P1, P2, P3 and P4 are fixed so as to correspond to the surfaces S1, S2, S3 and S4 respectively (see figure C.1). The dimensions are as follows (see figure C.2):

Posts P1 and P2

D_a = 6,50 mm ± 0,01 mm

D_b = 4,00 mm $^{+\ 0,00\ mm}_{-\ 0,02\ mm}$

H_a = 1,0 mm ± 0,1 mm

H_b = 2,0 mm max.

Posts P3 and P4

D_c = 5,50 mm ± 0,01 mm

After assembly, the upper annular surfaces of the four posts shall lie between two horizontal planes spaced 0,01 mm apart.

C.4 The cartridge shall be placed with its reference surfaces onto the posts of the horizontal gauge. A vertical down force F of 0,4N shall be exerted on the cartridge opposite each of the four posts.

C.5 Requirements

Under the conditions of C.4, any three of the four surfaces S1 to S4 shall be in contact with the annular surface of respective posts. Any gap between the remaining surface S and the annular surface of its post shall not exceed 0,1 mm.

-`,,```,,,,````-`-`,,`,,`,`,,`---

© ISO/IEC 1999 – All rights reserved
Copyright International Organization for Standardization
Provided by IHS under license with ISO
No reproduction or networking permitted without license from IHS
Not for Resale

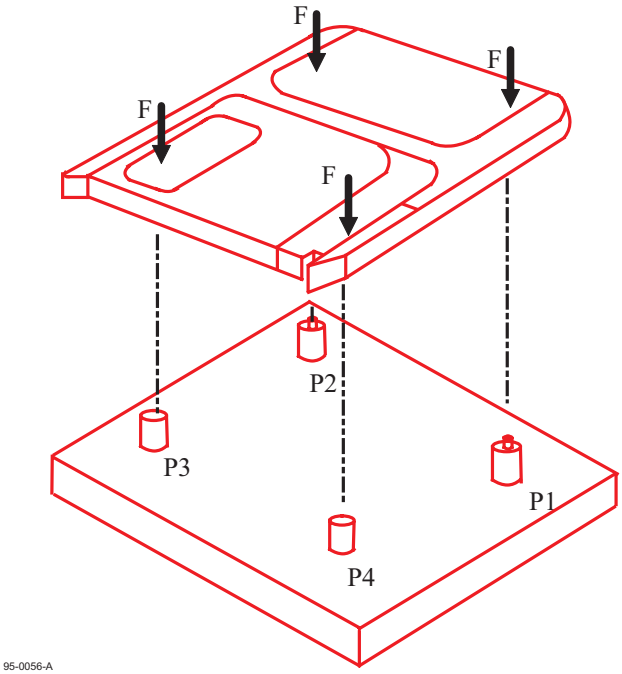

Figure C.1 - Compliance gauge

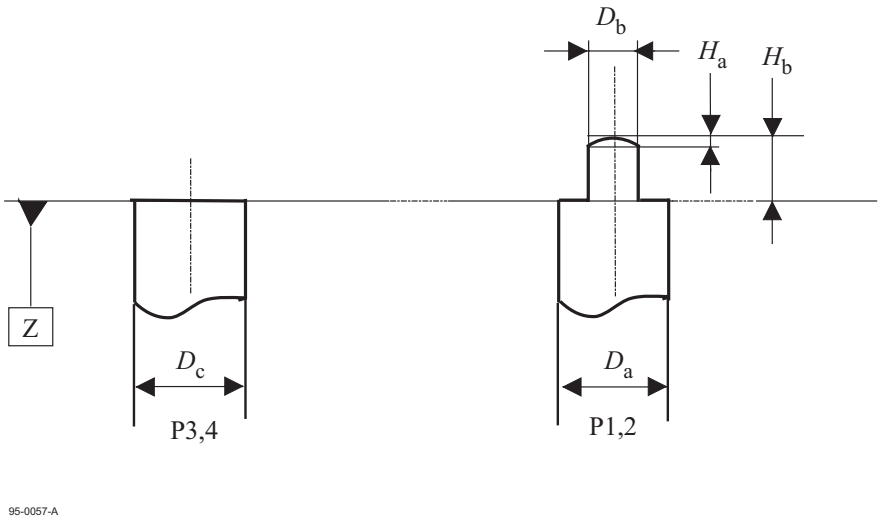

Figure C.2 - Detail of posts

© ISO/IEC 1999 – All rights reserved
Copyright International Organization for Standardization
Provided by IHS under license with ISO
No reproduction or networking permitted without license from IHS
Not for Resale

Annex D

(normative)

Test method for measuring the adsorbent force of the hub

D.1 The purpose of this test is to determine the magnetic characteristic of the magnetizable material of the hub.

D.2 Dimensions

The test device (see figure D.1) consists of a spacer, a magnet, a back yoke and a centre shaft. The dimensions of test device are as follows :

D_d = 8,0 mm ± 0,1 mm

D_e = 20,0 mm ± 0,1 mm

D_f = 19,0 mm max.

D_g = 3,9 mm $^{+\ 0,0\ mm}_{-\ 0,1\ mm}$

H_c = 0,40 mm ± 0,01 mm

H_d = 1,2 mm (typical, to be adjusted to meet the force requirement of D.4)

D.3 Material

The material of the test device shall be :

Magnet	: Any magnetizable material, typically Sm-Co
Back yoke	: Any suitable magnetizable material
Spacer	: Non-magnetizable material or air gap
Centre shaft	: Non-magnetizable material

D.4 Characteristics of the magnet with back yoke

Number of poles: 4 (typical)

Maximum energy product (BH_{max}): 175 kJ/m^3 ± 16 kJ/m^3

The characteristics of the magnet with back yoke shall be adjusted so that with a pure nickel plate of the following dimensions (see figure D.2), and the adsorbent force of this plate at the point of H_c = 0,4 mm when spaced from the magnet surface shall be 9,5 N ± 0,6 N.

D_h = 7,0 mm ± 0,1 mm

D_j = 22,0 mm ± 0,1 mm

H_e = 2,0 mm ± 0,05 mm

D.5 Test condition for temperature

These conditions shall be as specified in 8.1.1.

© ISO/IEC 1999 – All rights reserved
Copyright International Organization for Standardization
Provided by IHS under license with ISO
No reproduction or networking permitted without license from IHS
Not for Resale

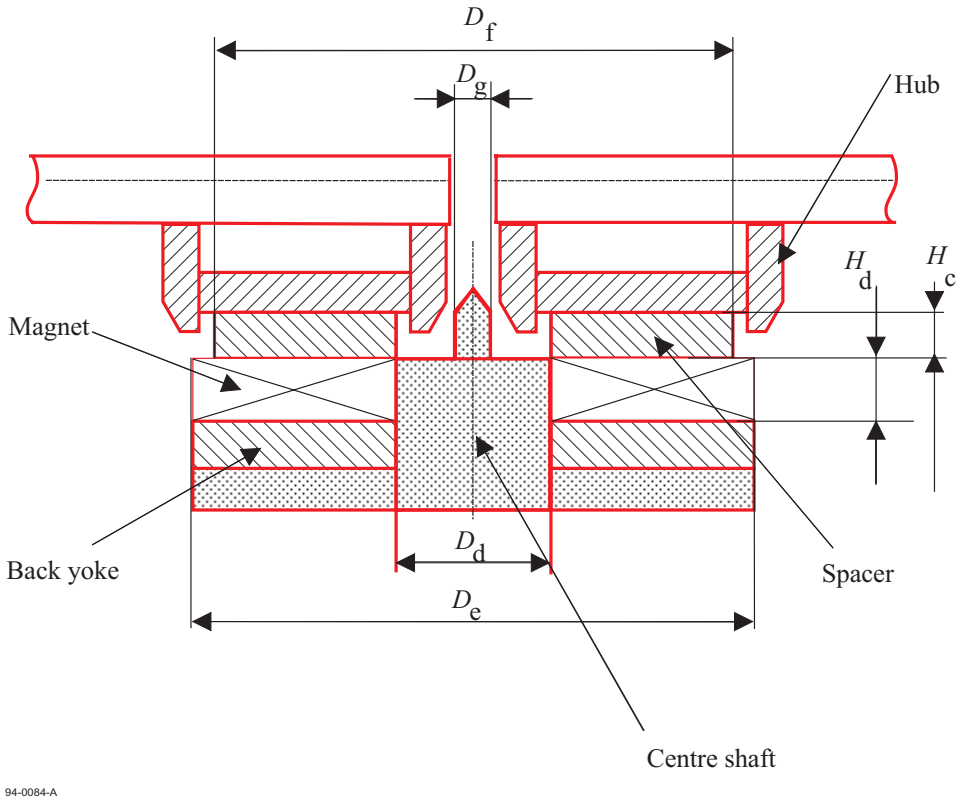

Figure D.1 - Test device for the clamping characteristic of the hub

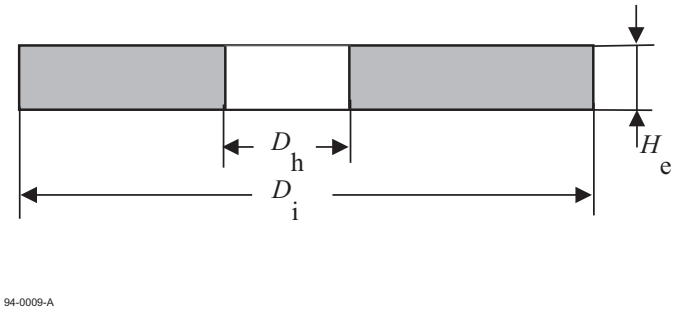

Figure D.2 - Calibration plate of the test device

© ISO/IEC 1999 – All rights reserved

Copyright International Organization for Standardization
Provided by IHS under license with ISO
No reproduction or networking permitted without license from IHS
Not for Resale

Annex E
(normative)

CRC for ID fields

The sixteen bits of the CRC shall be computed over the first three bytes of the ID field. The generator polynomial shall be

$$G(x) = x^{16} + x^{15} + x^{12} + 1$$

The residual polynomial shall be

$$R(x) = \left(\sum_{i=8}^{i=23} \bar{a}_i x^i + \sum_{i=0}^{i=7} a_i x^i \right) x^{16} \mod G(x)$$

and a_i denotes a bit of the first three bytes and $\bar{a}_i$ an inverted bit. The highest order bit of the first byte is a_{23}.

The sixteen bits c_k of the CRC are defined by

$$R(x) = \sum_{k=0}^{k=15} c_k x^k$$

where c_{15} is recorded as the highest order bit of the fourth byte in the ID field.

© ISO/IEC 1999 – All rights reserved
Copyright International Organization for Standardization
Provided by IHS under license with ISO
No reproduction or networking permitted without license from IHS
Not for Resale

Annex F

(normative)

Interleave, CRC, ECC, Resync for the data field

F.1 Interleave for 2 048-byte sectors

The different bytes shall be designated as follows.

D_n are user data bytes

DMP_m are DMP bytes (see 15.12.3)

C_k are CRC check bytes

$E_{s,t}$ are ECC check bytes

These bytes shall be ordered in a sequence A_n in the order in which they shall be recorded on the disk. The order of n of D_n is the same as that in which they are input from the interface. Depending on the value of n, these elements are:

for $1 \le n \le 2\,048$: $A_n = D_n$

for $2\,049 \le n \le 2\,056$: $A_n = DMP_m$

for $2\,057 \le n \le 2\,060$: $A_n = C_k$

for $2\,061 \le n \le 2\,380$: $A_n = E_{s,t}$

where:

$m = n - 2\,048$

$k = n - 2\,056$

$s = [(n - 2\,061) \bmod 20] + 1$

$$t = int\left[\frac{n - 2\,061}{10}\right] + 1$$

The notation *int*[x] denotes the largest integer not greater than x.

The first three parts of A_n are 20-way interleaved by mapping them onto a two-dimensional matrix B_{ij} with 103 rows and 20 columns. Thus

for $1 \le n \le 2\,060$: $B_{ij} = A_n$

where:

$i = 102 - int[(n-1)/20]$

$j = (n - 1) \bmod 20$

© ISO/IEC 1999 – All rights reserved

Copyright International Organization for Standardization
Provided by IHS under license with ISO
No reproduction or networking permitted without license from IHS
Not for Resale

F.2 CRC

F.2.1 General

The CRC and the ECC shall be computed over the Galois field based on the primitive polynomial

$$G_p(x) = x^8 + x^5 + x^3 + x^2 + 1$$

The generator polynomial for the CRC bytes shall be

$$G_c(x) = \prod_{i=136}^{i=139}\left(x + \alpha^i\right)$$

where the element $\alpha^i = (ß^i)^{88}$, with ß being a primitive root of $G_p(x)$. The value of the *n*-th bit in a byte is the coefficient of the *n*-th power of *ß*, where $0 \le n \le 7$, when *ß* is expressed on a polynomial basis.

The contents of the four check bytes c_k of the CRC are defined by the residual polynomial

$$R_c(x) = I_c(x)x^4 \quad \text{mod } G_c(x)$$

$$R_c(x) = \sum_{k=1}^{k=4} c_k x^{4-k}$$

The last equation specifies the storage locations for the coefficients of the polynomial.

F.2.2 CRC for 2 048-byte sectors

The four check bytes of the CRC shall be computed over the user data and the SWF bytes as specified in F.2.1.

The information polynomial shall be

$$I_c(x) = \left[\sum_{i=1}^{i=102}\left(\sum_{j=0}^{j=19}\left(B_{i,j}\right)x^i\right)\right] + \sum_{j=0}^{j=15}\left(B_{0,j}\right)x^0$$

F.3 ECC

The primitive polynomial $G_p(x)$ and the elements α^i and *ß* shall be as specified in F.2.1. The generator polynomial for the check bytes of the ECC shall be

$$G_E(x) = \prod_{j=120}^{i=135}(x + a^i)$$

This polynomial is self-reciprocal. This property can be used to reduce the hardware size. The initial setting of the ECC register shall be all ZEROs. The bits of the computed check bytes shall be inverted before they are encoded into Channel bits.

F.3.1 ECC for 2 048-byte sectors

The 160 check bytes of the ECC shall be computed over the user bytes, the SWF bytes and the CRC bytes. The corresponding 10 information polynomials shall be:

$$I_{E_j}(x) = \sum_{i=0}^{i=102}\left(B_{i,j}\right)x^i$$

where $0 \le j \le 19$.

The contents of the 16 check bytes $E_{s,t}$ for each polynomial $I_{Ej}(x)$ are defined by the residual polynomial

$$R_{E_j}(x) = I_{E_j}(x)x^{16} \quad \text{mod } G_E(x)$$

© ISO/IEC 1999 – All rights reserved
Copyright International Organization for Standardization
Provided by IHS under license with ISO
No reproduction or networking permitted without license from IHS
Not for Resale

$$R_{E_j}(x) = \sum_{t=1}^{t=16} E_{j+1,t} x^{16-t}$$

The last equation specifies the storage locations for the coefficients of the polynomials.

F.4 Resync

The Resync fields (see annex G) shall be inserted in the Data field to prevent loss of synchronization and to limit the propagation of errors in the user data. They are numbered consecutively and shall contain one of the following pattern of Channel bits.

0X0 100 000 001 000 000 100 00Y

0X0 100 000 001 000 000 101 00Y

Where X and Y are set to ZERO or ONE based on the preceding or following data patterns.

For 2 048-byte sectors, a field RSn shall be inserted between bytes A_{40n} and A_{40n+1},

where $1 \leq n \leq 59$.

F.5 Recording sequence for the Data field

The elements of the Data field shall be recorded on the disk according to sequence A_n immediately following the Sync bytes and with the Resync bytes inserted as specified in F.4.

Figure F.1 shows in matrix form the arrangement of these elements. The sequence of recording is from top-to-bottom and left-to-right.

SB designates a Sync byte
D designates a user byte
RS designates a Resync byte
P designates a DMP byte
C designates a check byte for CRC
E designates a check byte for ECC

For 2 048-byte sectors (figure F.1) the first 103 rows contain in columns 0 to 19 the user bytes, the DMP bytes and the CRC check bytes. The next 16 rows contain only the ECC check bytes.

© ISO/IEC 1999 – All rights reserved

Copyright International Organization for Standardization
Provided by IHS under license with ISO
No reproduction or networking permitted without license from IHS
Not for Resale

Column No. $j \rightarrow$				0	1	2	3	…	7	8	9	…	15	16	17	18	19	Row No. $i \downarrow$
SB1	SB2	SB3	SB4	D1	D2	D3	D4		D8	D9	D10		D16	D17	D18	D19	D20	102
				D21	D22	D23	D24		D28	D29	D30		D36	D37	D38	D39	D40	101
		RS1	RS1	D41	D42	D43	D44		D48	D49	D50		D56	D57	D58	D59	D60	100
				D61	D62	D63	D64		D68	D69	D70		D76	D77	D78	D79	D80	99
		RS2	RS2	D81	D82	D83	D84		D88	D89	D90		D96	D97	D98	D99	D100	98
				D101	D102	D103	D104		D108	D109	D110		D116	D117	D118	D119	D120	97
		RS3	RS3	D121	D122	D123	D124		D128	D129	D130		D136	D137	D138	D139	D140	96
103	rows																	. . .
		RS49	RS49	D1961	D1962	D1963	D1964		D1968	D1969	D1970		D1976	D1977	D1978	D1979	D1980	4
				D1981	D1982	D1983	D1984		D1988	D1989	D1990		D1996	D1997	D1998	D1999	D2000	3
		RS50	RS50	D2001	D2002	D2003	D2004		D2008	D2009	D2010		D2016	D2017	D2018	D2019	D2020	2
				D2021	D2022	D2023	D2024		D2028	D2029	D2030		D2036	D2037	D2038	D2039	D2040	1
		RS51	RS51	D2041	D2041	D2043	D2044		D2048	P1,1	P1,2		P2,4	C1	C2	C3	C4	0
				E1,1	E2,1	E3,1	E4,1		E8,1	E9,1	E10,1		E16,1	E17,1	E18,1	E19,1	E20,1	-1
		RS52	RS52	E1,2	E2,2	E3,2	E4,2		E8,2	E9,2	E10,2		E16,2	E17,2	E18,2	E19,2	E20,2	-2
				E1,3	E2,3	E3,3	E4,3		E8,3	E9,3	E10,3		E16,3	E17,3	E18,3	E19,3	E20,3	-3
16	rows																	. . .
				E1,13	E3,13	E3,13	E4,13		E8,13	E9,13	E10,13		E16,13	E17,13	E18,13	E19,13	E20,13	.-13
		RS58	RS58	E1,14	E2,14	E3,14	E4,14		E8,14	E9,14	E10,14		E16,14	E17,14	E18,14	E19,14	E20,14	-14
				E1,15	E2,15	E3,15	E4,15		E8,15	E9,15	E10,15		E16,15	E17,15	E18,15	E19,15	E20,15	-15
		RS59	RS59	E1,16	E2,16	E3,16	E4,16		E8,16	E9,16	E10,16		E16,16	E17,16	E18,16	E19,16	E20,16	-16

Figure F.1 - Data field configuration, 2 048-byte sectors, ECC interleave

Copyright International Organization for Standardization
Provided by IHS under license with ISO
No reproduction or networking permitted without license from IHS
Not for Resale
© ISO/IEC 1999 – All rights reserved

Annex G
(normative)

Determination of Resync pattern

DSV (Digital Sum Value) is used in the descriptions that follow. Other acronyms include PLL (Phase Lock Loop), PPM (Pulse Position Modulation) and PWM (Pulse Width Modulation).

G.1 Conditions of Resync pattern

The Resync pattern shall have the following characteristics to satisfy its required function:

1. The Resync pattern is an irregular Channel bit pattern of seven consecutive ZERO bits and a ONE bit followed by six consecutive ZERO bits that does not occur in the (1,7) modulation code.
2. The irregularity of Resync pattern is detectable using either only leading edges or only trailing edges when dual PLL is used.
3. The number of ONEs in Resync pattern is switchable from an odd number to an even number or vice versa for minimizing the d.c. level fluctuation of the data pattern in the Data field of a sector.
4. The length of the Resync pattern shall be 24 Channel bits.

G.2 Resync pattern

Selection of one of the two Resync patterns shown below shall be made in order to minimize the d.c. level fluctuation.

The selection criteria is described in G.5.

Data 1	Resync area		Data 2
	Resync pattern		
Resync 1	0x0	100000001000000100	00y
Resync 2	0x0	100000001000000101	00y

where: x = ZERO or ONE
y = ZERO or ONE

© ISO/IEC 1999 – All rights reserved

Copyright International Organization for Standardization
Provided by IHS under license with ISO
No reproduction or networking permitted without license from IHS
Not for Resale

G.3 Generation algorithm of resync pattern

Table G.1 - Algorithm for resync patterns

PREVIOUS Data 1		Resync Area								NEXT Data 2
Data bits X1 X2	Channel bits	00	assumed data bits						01	Data bits X3 X4
		0x0	Resync Pattern					z	00y	
00	0 001	010	100	000	001	000	000	100	001	0x
								0	000	1x
								1	001	0x
								1	000	1x
00	1 001	010	100	000	001	000	000	100	001	0x
								0	000	1x
								1	001	0x
								1	000	1x
01	0 001	010	100	000	001	000	000	100	001	0x
								0	000	1x
								1	001	0x
								1	000	1x
01	1 010	000	100	000	001	000	000	100	001	0x
								0	000	1x
								1	001	0x
								1	000	1x
10	0 101	010	100	000	001	000	000	100	001	0x
								0	000	1x
								1	001	0x
								1	000	1x
10	1 - - -		does not occur							
11	0 010	000	100	000	001	000	000	100	001	0x
								0	000	1x
								1	001	0x
								1	000	1x
11	1 - - -		does not occur							

98-0071-A

where:

z = ZERO for Resync 1
z = ONE for Resync 2

Note 1: x_1 and x_2 are encoded assuming the following information bits are ZERO ZERO
Note 2: The values of these information bits are the assumed value for encoding.
Note 3: This Channel bit was inverted after encoding in order to generate the irregular pattern
Note 4: The value of the last three bits of the Resync area is determined by:

1) the previous Channel bit assumed to be ZERO
2) the two information bits (assumed to be ZERO ONE);
3) the state of Data 2 information bit X_3 per the (1,7) encode table 3.

Copyright International Organization for Standardization
Provided by IHS under license with ISO
No reproduction or networking permitted without license from IHS
Not for Resale
© ISO/IEC 1999 – All rights reserved

G.4 Minimization of d.c. level

The criteria for selecting either Resync pattern 1 or Resync pattern 2 in order to minimize the d.c. level fluctuation is based on the Channel bits of the Data area, and 0x0, 00y in the Resync area.

Data	Resync area			Data
		Resync pattern		
Data Block	0x0	100000001000000100 (Resync pattern 1) 100000001000000101 (Resync Pattern 2)	00y	Data Block

where: x = ZERO or ONE
y = ZERO or ONE

The decision is made to select either Resync pattern 1 or Resync pattern 2 according to the procedure described in G.5.

G.5 Determination of Resync pattern

The Resync pattern to be used shall be determined by the following procedure.

1. Convert the Channel bits described in PPM data into PWM data in order to simplify handling.

   For example, if the PPM data is

   ... 0010100010010 ...

   the PWM data shall be

   ... 0011000011100 ...

The DSV calculation shall be defined in terms of PWM data such that ZERO = -1 and ONE = +1. (see Example below)

Example of calculation of Block DSV_m and Resync DSV_m

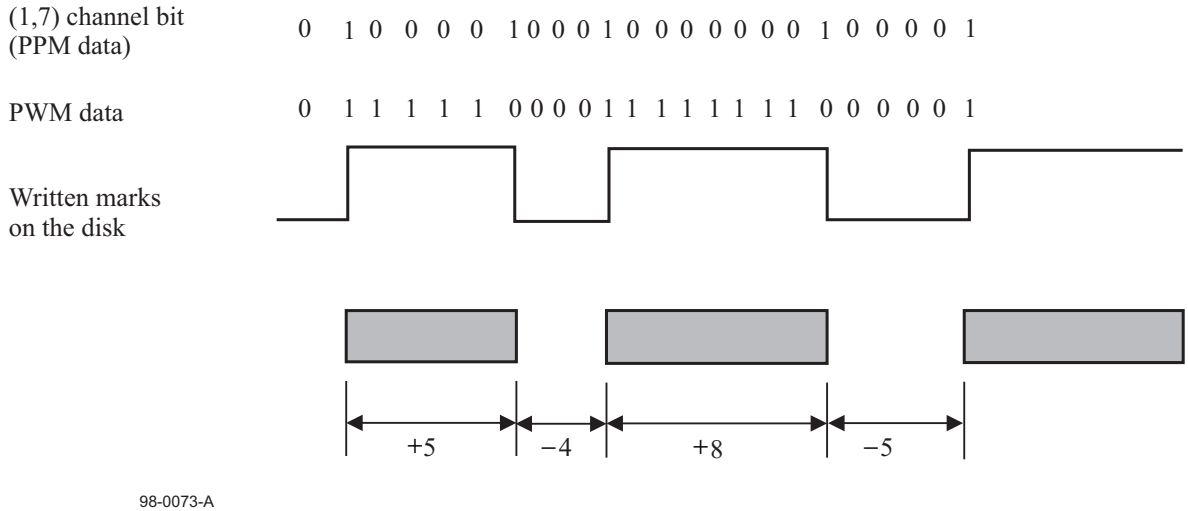

DSV_m is calculated as

DSV_m = (+5 - 4 + 8 - 5 ...)

© ISO/IEC 1999 – All rights reserved

Copyright International Organization for Standardization
Provided by IHS under license with ISO
No reproduction or networking permitted without license from IHS
Not for Resale

2. The Resync area shall be divided into two parts (RS || INV), where both parts are concatenated as follows:

   RS = 0x010000000100000010 in PPM data
   INV = 000y(INV1) or 100y(INV2) in PPM data .

3. The user data field shall be concatenated as

   VFO_3 || SYNC || B_0 || RS_1 || INV1 (or INV2) || B_1 || RS_2 || ...

   ... || INV1 (or INV2) || B_m || RS_{m+1} || ... ... || INV1 (or INV2) || B_N

   where

   m = 1 to N
   N = 59 in the 2 048-byte sector,

   (See figure G.1)

4. The DSV(z) function shall be defined such that the argument (z), which is a PPM data stream, shall result in the PWM DSV sum based on the last PWM state of the PWM data preceding the data in the (z) argument.

5. INV1 or INV2 shall be selected in step m using the following algorithm:

   $P_0 = DSV(VFO_3 || SYNC || B_0 || RS_1)$
   $P_m = P_{m-1} + DSV(INV1 || B_m || RS_{m+1})$ or
   $P_m = P_{m-1} + DSV(INV2 || B_m || RS)$

   Select INV1 or INV2 to minimize $|P_m|$.

   $P_N = P_{N-1} + DSV(INV1 || B_N)$ or
   $P_N = P_{N-1} + DSV(INV2 || B_N)$

   Select INV1 or INV2 to minimize $|P_N|$.

This procedure shall be repeated from m = 1 to N, where N = 59 in 2 048-byte sector-byte sector If $|P_m|$ is the same for Resync pattern 1 and Resync pattern 2, Resync pattern 1 shall be selected.

© ISO/IEC 1999 – All rights reserved
Copyright International Organization for Standardization
Provided by IHS under license with ISO
No reproduction or networking permitted without license from IHS
Not for Resale

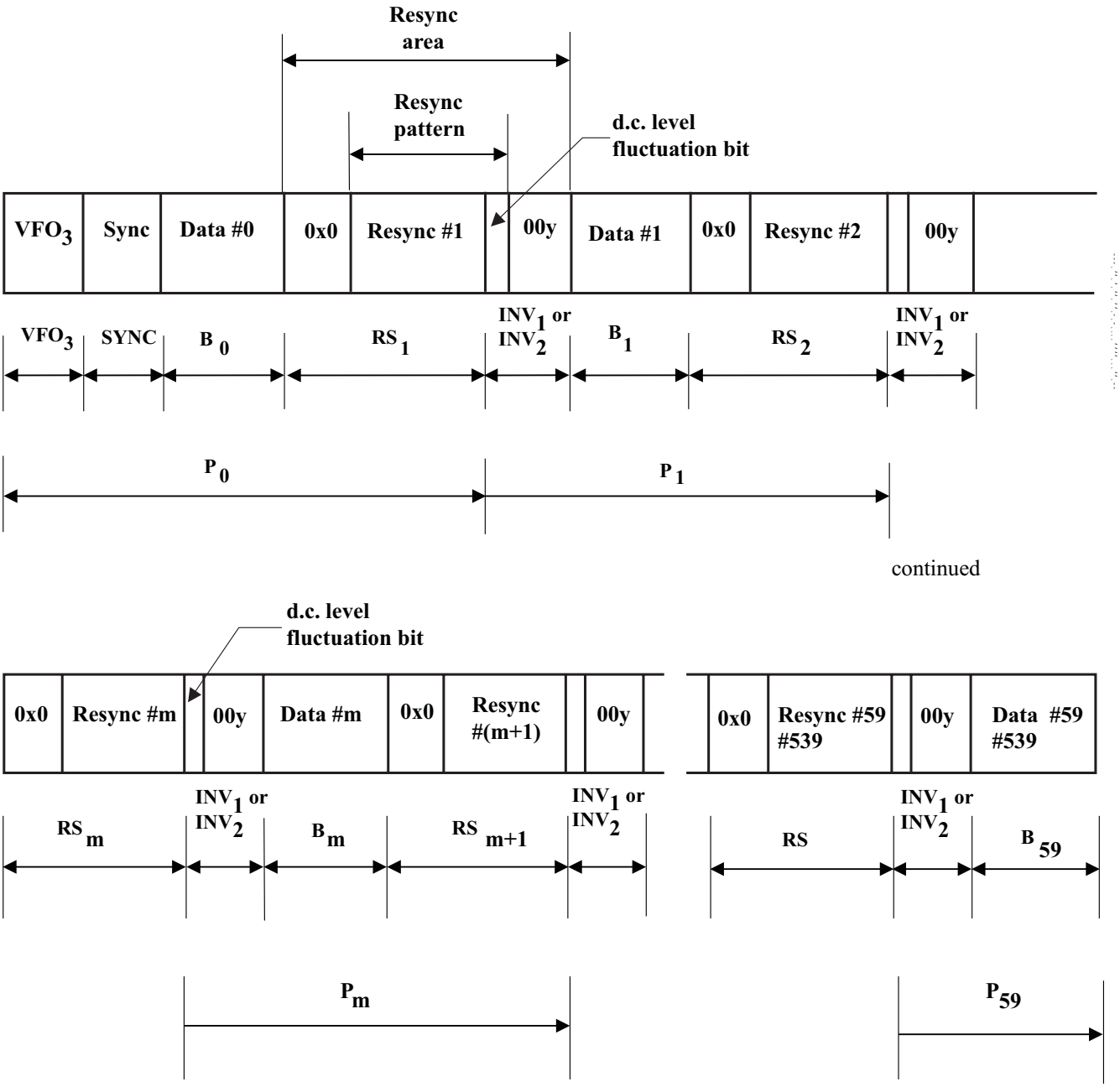

Note: Each P0, P1,...P59 represents the total DSV from VFO_3.

98-0072-A

Figure G.1 - 2 048-byte sector Resync

© ISO/IEC 1999 – All rights reserved
Copyright International Organization for Standardization
Provided by IHS under license with ISO
No reproduction or networking permitted without license from IHS
Not for Resale

Annex H
(normative)

Read Channel for measuring jitter

Jitter shall be measured by using the following read Channel.

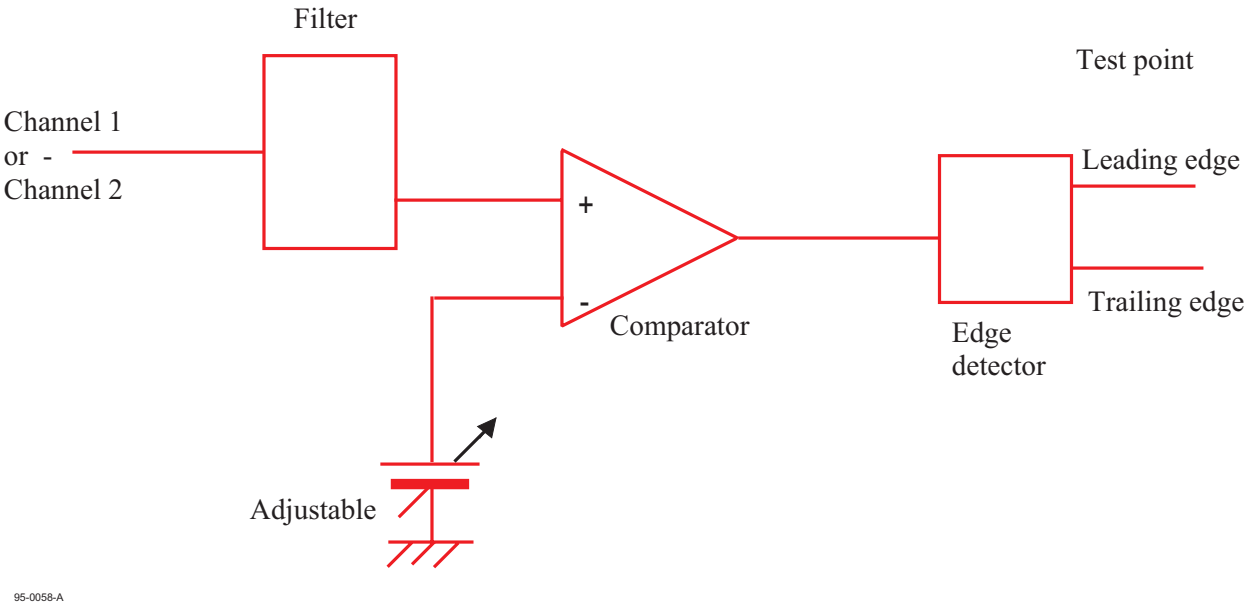

Input signal:

Channel 1, for embossed marks
Channel 2, for user written marks

Filter specifications:

1) Equalizer: See annex M.
2) Filter type: 5th Bessel function
3) Low pass filter: Cut-off frequency = one half the channel clock frequency of the band being tested.

Copyright International Organization for Standardization
Provided by IHS under license with ISO
No reproduction or networking permitted without license from IHS
Not for Resale
© ISO/IEC 1999 – All rights reserved

Annex J
(normative)

Timing jitter measuring procedure

The timing jitter of leading-to-leading or trailing-to-trailing edges shall be measured using the following procedures.

1) Set the threshold level of the detector circuit such that the 2T mark and 2T space of the VFO is exactly 2 Channel bit times T long.
2) Hold the threshold level, and detect the signal edges.
3) Measure the lengths in time of the leading-to-leading and trailing-to-trailing edges using a Time Interval Analyzer.
4) Acquire 10^5 independent time interval samples excluding the data from defective areas.
5) Calculate the standard deviation *Jt* of the timing jitter distribution; the difference between the measured length of leading-to-leading or trailing-to-trailing edges and the mean value of corresponding mark or space length *Ln* shall be taken as samples, where *Jt* is shown in figure J.1.

The lengths leading-to-leading or trailing-to-trailing edges shall be separately examined, and the specifications should be satisfied even in the worst case.

In case of header signal evaluation, the threshold level shall be set using VFO_1 and the time interval samples shall be measured using the AM to PA fields.

In case of embossed data signal evaluation, the threshold level shall be set using VFO_3 and the time interval samples shall be measured using the Sync and Data field in the user data area, including all time interval samples from user data SWF, CRC, ECC, and Resync.

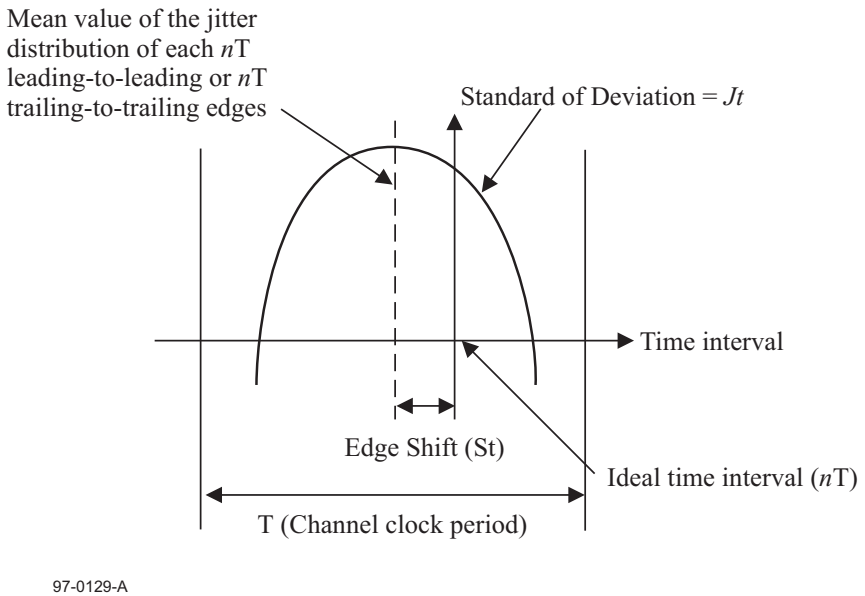

Figure J.1 - Measured distribution of timing jitter

--`,,```,,,,````-`-`,,`,,`,`,,`---

© ISO/IEC 1999 – All rights reserved

Copyright International Organization for Standardization
Provided by IHS under license with ISO
No reproduction or networking permitted without license from IHS
Not for Resale

Annex K
(normative)

Definition of write pulse shape

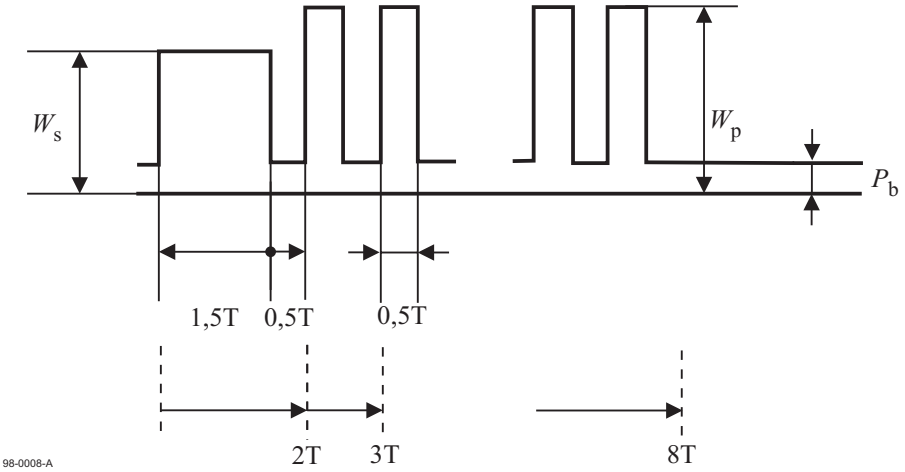

where:

W_p = Peak Power of Writing

W_s = Subpeak Power of Writing

P_b = Bias Power

Figure K.1 - Shape of write pulse train for testing

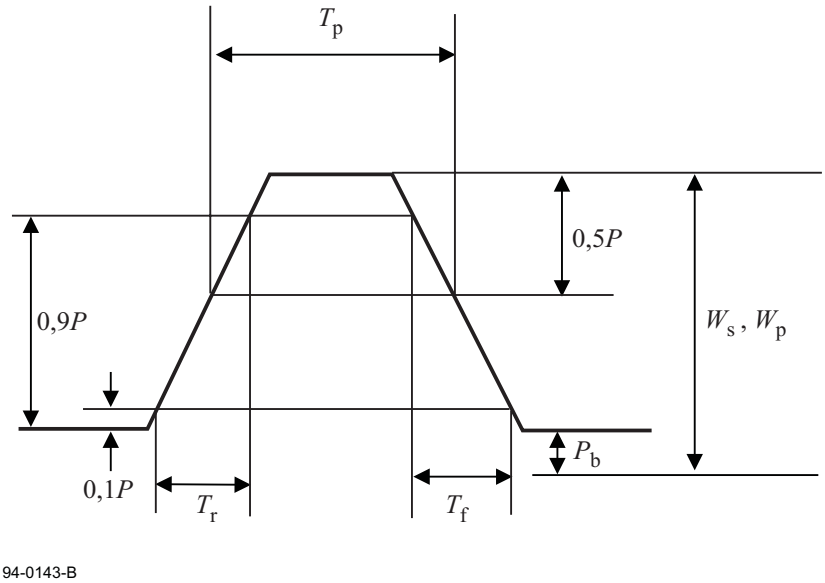

where:

W_s, W_p = Write Power

T_r = Rise Time

P_b = Bias power

$P = P_w - P_b$

T_f = Fall Time

T_p = Write pulse width

Figure K.2 - Shape of write pulse for testing

© ISO/IEC 1999 – All rights reserved
Copyright International Organization for Standardization
Provided by IHS under license with ISO
No reproduction or networking permitted without license from IHS
Not for Resale

Annex L
(normative)

Requirements for interchange

L.1 Equipment for writing

The disk under test shall have been written with arbitrary data by a disk drive for data interchange use in the operating environment.

L.2 Test equipment for reading

L.2.1 General

The read test shall be performed on a test drive in the test environment. The rotational frequency of the disk when reading shall be as defined in clause 9.5.

The direction of rotation shall be as defined in clause 10.5.9

L.2.2 Read Channel

L.2.2.1 Characteristics of the optical beam

The optical beam used for reading shall comply with the requirements of 9.2 b), c), d) and f).

L.2.2.2 Read power

The read power shall comply with the requirements of 9.3.

L.2.2.3 Optics

The optical head used for reading shall comply with the requirements of annex L.

L.2.2.4 Read amplifier

The read amplifier after the photo detector in both Channels 1 and 2 shall have a flat response from d.c. to 37 MHz within 1 dB.

L.2.2.5 Analog to binary conversion

The signals from the read amplifier shall be converted from analog to binary. The converter for Channel 1 shall work properly for signals from pre-recorded marks with properties as defined in 22 and 23.

The converter for Channel 2 shall work properly for signals from user-written marks with properties as defined in 26 and 27.

L.2.2.6 Binary-to-digital conversion

The binary signal shall be converted to a digital signal according to the rules of the recording code.

L.2.3 Tracking

The open-loop transfer function for the axial and radial tracking servo shall be

$$H = \frac{(2\pi f_0)^2}{cs^2} \left| \frac{1 + \frac{sc}{2\pi f_0}}{1 + \frac{s}{2\pi f_0 c}} \right|$$

where $s = i2\pi f$, within an accuracy such that $|1+H|$ not deviate more than ± 20% from its nominal value in a bandwidth from 50 Hz to 10 kHz.

The constant c shall be 3. The open-loop 0-dB frequency f_0 shall be 1 550 Hz for the axial servo and 2 340 Hz for the radial servo. The open-loop d.c. gain of the axial servo shall be at least 80 dB.

L.3 Requirements for the digital read signals

A byte error is defined by a byte in which one or more bits have a wrong setting, as detected by the error detection and correction circuit.

© ISO/IEC 1999 – All rights reserved

Copyright International Organization for Standardization
Provided by IHS under license with ISO
No reproduction or networking permitted without license from IHS
Not for Resale

L.3.1 Any sector accepted as valid during the writing process shall not contain byte errors in Channel 2 after the error correction circuit.

L.3.2 Any sector not accepted as valid during the writing process shall have been rewritten according to the rules for defect management.

L.4 Requirements for the digital servo signals

The focus of the optical beam shall not jump tracks voluntarily.

L.5 Requirement for interchange

An interchanged optical disk cartridge meets the requirements for interchangeability if it meets the requirements of L.3 and L.4 when it is written on an interchange drive according to L.1 and read on a test drive according to L.2.

© ISO/IEC 1999 – All rights reserved
Copyright International Organization for Standardization
Provided by IHS under license with ISO
No reproduction or networking permitted without license from IHS
Not for Resale

Annex M
(normative)

Measurement implementation for Cross-track signal

The Cross-track signal shall be measured by using the implementation shown in figure M.1 with the following characteristics.

Droop Rate:

$$0{,}1(1/\mu s) \le \frac{\Delta I / I_{bottom}}{\Delta t} \le 0{,}2(1/\mu s)$$

Bottom Trace Error (BTE):

$$\left| \frac{I_{bottom} - I_{bh}}{I_{bhmax}} \right| \le 0{,}05$$

I_{bh}: Bottom-hold signal at the bottom position

I_{bottom}: Channel 1 signal at the bottom position

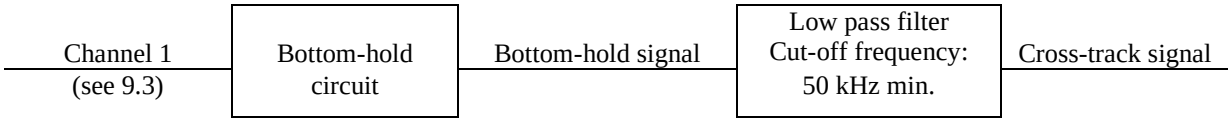

Figure M.1 Measurement implementation for Cross-track signal

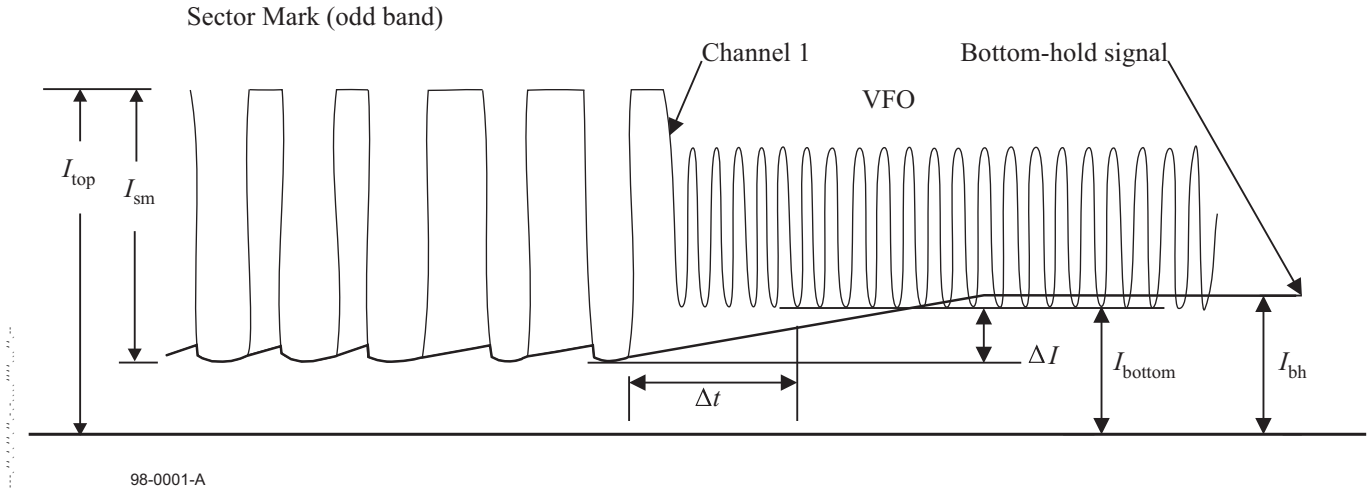

Figure M.2 Illustration of the various parameters for bottom-hold characteristics.

© ISO/IEC 1999 – All rights reserved

Copyright International Organization for Standardization
Provided by IHS under license with ISO
No reproduction or networking permitted without license from IHS
Not for Resale

Annex N
(normative)

Asymmetry measuring definition

The asymmetry of signals from headers (clause 22.5), and embossed Recording field (clause 23.2) shall be measured based on the following definitions.

N.1 Asymmetry of signal from header (clause 22.4)

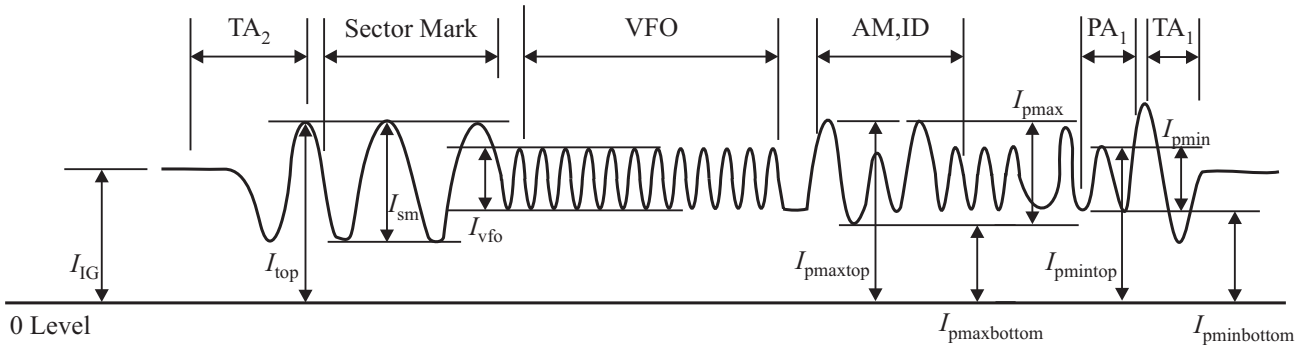

98-0002-A

Figure N.1 Signal from Header in channel 1

$$\text{Asymmetry} = \frac{(I_{pmaxtop} + I_{pmaxbottom})/2 - (I_{pmintop} + I_{pminbottom})/2}{(I_{pmaxtop} - I_{pmaxbottom})}$$

where I_{pmin} and I_{pmax} are the signals with minimum and maximum amplitude in that sector from Address Mark, ID, and PA. $I_{pmaxtop}$ and $I_{pmaxmin}$ are the signals of top and bottom level of I_{pmax}. $I_{pmintop}$ and $I_{pminbottom}$ are the signals of top and bottom level of I_{pmin}.

N.2 Asymmetry of signal from embossed Recording field (clause 23.2)

$$\text{Asymmetry} = \frac{(I_{pmaxtop} + I_{pmaxbottom})/2 - (I_{pmintop} + \text{Ipminbottom})/2}{(I_{pmaxtop} - I_{pmaxbottom})}$$

where I_{pmin} and I_{pmax} are the signals with minimum and maximum amplitude in embossed Recording field of sector. $I_{pmaxtop}$ and $I_{pmaxmin}$ are the signals of top and bottom level of $I_{pmax.}$ $I_{pmintop}$ and $I_{pminbottom}$ are the signals of top and bottom level of I_{pmin}.

© ISO/IEC 1999 – All rights reserved
Copyright International Organization for Standardization
Provided by IHS under license with ISO
No reproduction or networking permitted without license from IHS
Not for Resale

Annex P
(informative)

Office environment

P.1 Air cleanliness

Due to their construction and mode of operation optical disk cartridges have considerable resistance to the effects of dust particles around and inside the disk drive. Consequently it is not generally necessary to take special precautions to maintain a sufficiently low concentration of dust particles.

Operation in heavy concentration of dust should be avoided, e.g. in a machine shop or on a building site.

Office environment implies an environment in which personnel may spend a full working day without protection and without suffering temporary or permanent discomfort.

P.2 Effects of operation

In the office environment (as well as other environments) it is possible for an optical disk drive to degrade the quality of written marks if the read power is applied to a single track for a long period of time. This would happen if a media in a drive remains loaded , the drive remains in the ready status, and is in jump-back mode on one particular track. If this occurs at the maximum operating temperature (55°C) and at the maximum allowable bias field (32 000 A/m), the marks on the media may be degraded. The media manufacturer's selection of the value for the maximum read powers allowed in the User Zone as well as the optical drive manufacturer's read power management method should reflect this possibility and be designed to minimize any risk to data integrity.

© ISO/IEC 1999 – All rights reserved

Copyright International Organization for Standardization
Provided by IHS under license with ISO
No reproduction or networking permitted without license from IHS
Not for Resale

Annex Q
(informative)

Derivation of the operating climatic environment

This annex gives some background on how some of the conditions of the operating environment in 8.1.2 have been derived.

Q.1 Standard climatic environment classes

The conditions of the ODC operating environment are, with a few exceptions mentioned below, based on parameter values of the IEC standard climatic environment class 3K3 described in IEC publication 721-3-3. This publication defines environmental classes for stationary use of equipment at weather-protected locations.

The IEC class 3K3 refers to climatic conditions which

"... may be found in normal living or working areas, e.g. living rooms , rooms for general use (theatres restaurants etc.), offices, shops, workshops for electronic assemblies and other electrotechnical products, telecommunication centres, storage rooms for valuable and sensitive products."

Q.2 Overtemperature considerations

While IEC class 3K3 defines the limits for the room climate only, the ODC operating environment specification in this International Standard takes into consideration also system and drive overtemperature. This means that when inserted in a drive, the ODC will sense a temperature which is above the ambient room temperature. The figures in the operating environment specification have been calculated from the assumption that overtemperature may be up to 20°C.

Q.3 Absolute humidity

The introduction of the parameter

absolute humidity(unit : g water / m^3 of air)

is very useful when studying overtemperature. When the temperature rises inside a drive, the relative humidity goes down but the absolute humidity remains substantially constant. So, making room for overtemperature in the operating environment specification affects not only the upper temperature limit but also the lower relative humidity limit. The relationship between these parameters is shown in the climatogram (the relative humidity vs. temperature map) of the ODC operating environment, figure Q.1.

The absolute humidity restrictions influence the operating environment in the following two ways:

i. Combination of high temperatures and high relative humidities are excluded. Such combinations could have negative influence on the performance and the life of ODCs.

ii. Combinations of low temperatures and low relative humidities are excluded. Such combinations are very unlikely to occur in worldwide normal office environments.

Q.4 Deviations from the IEC standard environment class

Apart from the change introduced by the overtemperature considerations above, there are a few more parameter values which are not based on IEC class 3K3. These are:

– Atmospheric pressure

The IEC 3K3 lower limit of 70 kPa has been extended to 60 kPa. ODCs according to this International Standard show no intrinsic pressure sensitivity and 70 kPa excludes some possible markets for ODCs.

– Absolute humidity

The IEC 3K3 value for the upper limit of 25 g/m^3 has been raised to 30 g/m^3 in view of some expected operation in portable devices outside the controlled office environment.

--`,,```,,,,````-`-`,,`,,`,`,,`---

© ISO/IEC 1999 – All rights reserved
Copyright International Organization for Standardization
Provided by IHS under license with ISO
No reproduction or networking permitted without license from IHS
Not for Resale

– Temperature

The maximum temperature around the ODC, i.e. room temperature plus overtemperature, has been limited to 55 °C (while IEC 3K3 + 20 °C would have become 60 °C).For ODCs according to this International Standard, however, the 55°C limit is considered to be a physical limit above which operation (as well as storage) is not safe.

This means that equipment designers may want to ensure adequate cooling inside the drive especially when the room temperature approaches the upper IEC 3K3 limit of 40°C.

– Further

The rates of change (the gradients) of temperature and relative humidity are not according to IEC 3K3.

Q.5 Wet bulb temperature specifications

Instead of specifying limits for the absolute humidity, some of the earlier standards for ODCs as well as those for other digital data storage media often use restrictions of the parameter

wet bulb temperature (unit: °C)

in order to avoid too severe combinations of high temperatures and high relative humidities.

In order to facilitate comparisons between different specifications, figure Q.2 and table Q.1 show wet bulb temperatures of interest for the ODC operating environment, as well as for the testing and storage environments. Since wet bulb temperatures vary slightly with the atmospheric pressure, the diagram is valid for the normal pressure of 101,3 kPa only.

--`,,```,,,,````-`-`,,`,,`,`,,`---

© ISO/IEC 1999 – All rights reserved

Copyright International Organization for Standardization
Provided by IHS under license with ISO
No reproduction or networking permitted without license from IHS
Not for Resale

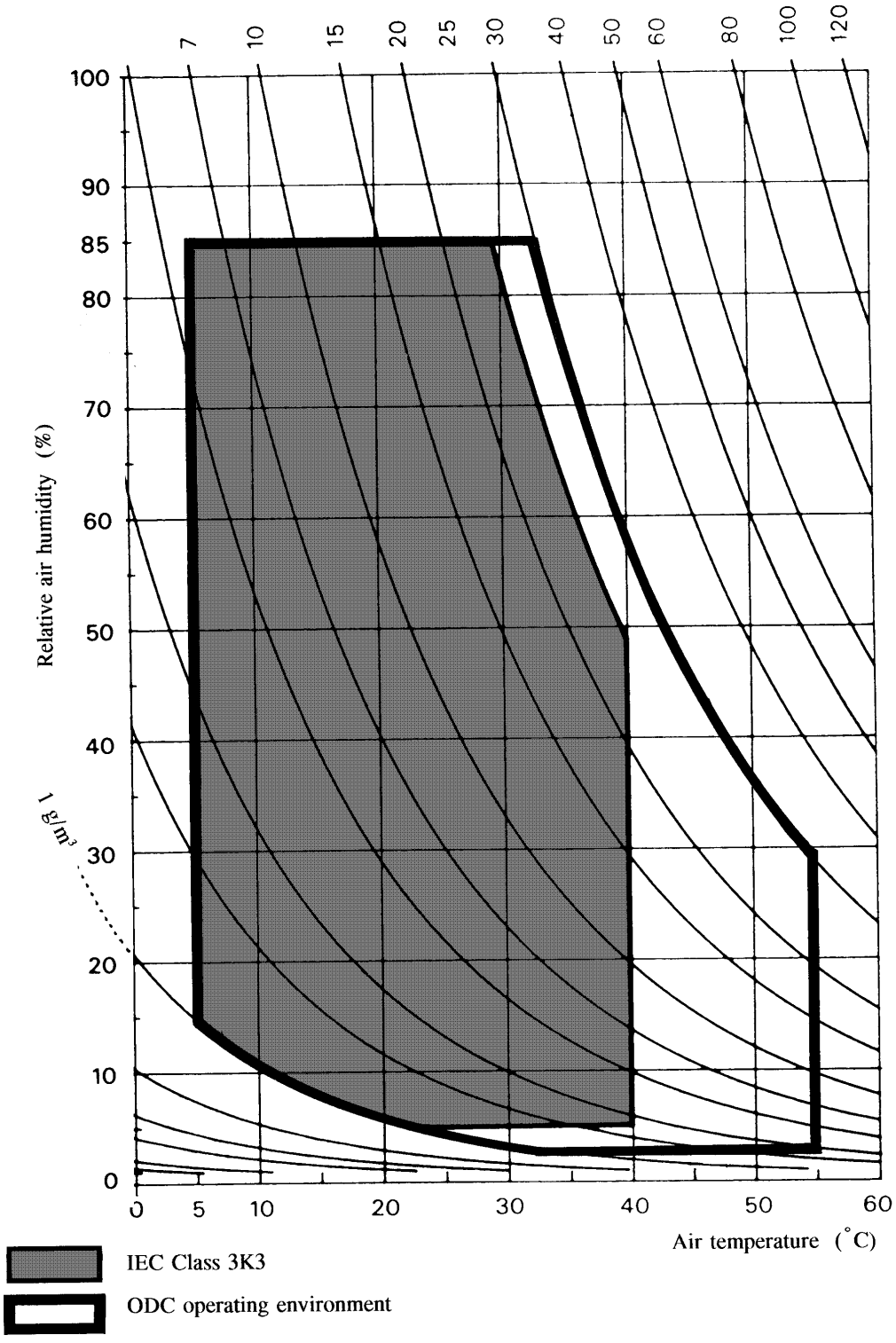

Figure Q.1 - Climatogram of IEC Class 3K3 and the ODC operating environment

© ISO/IEC 1999 – All rights reserved
Copyright International Organization for Standardization
Provided by IHS under license with ISO
No reproduction or networking permitted without license from IHS
Not for Resale

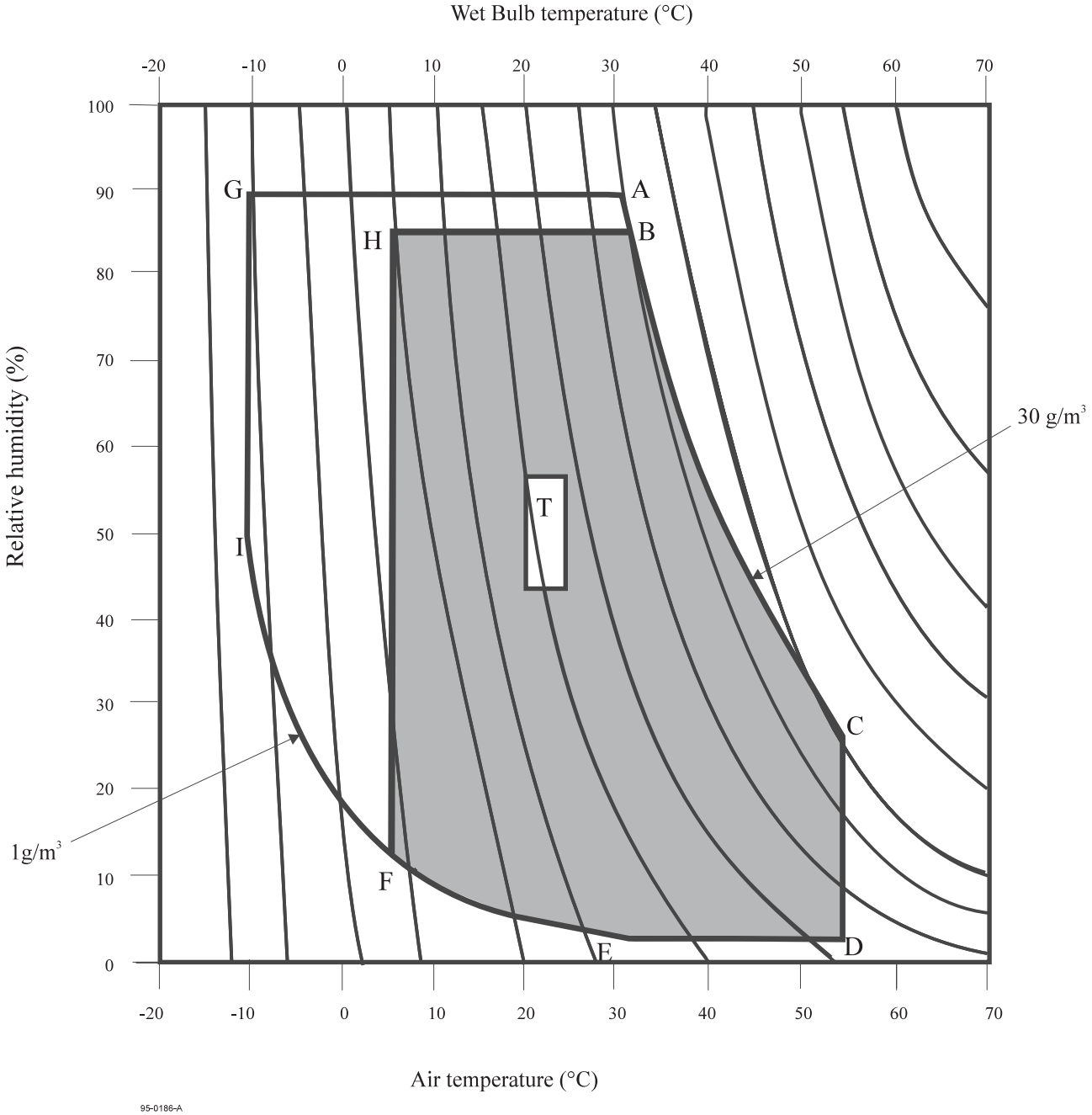

Figure Q.2 - Wet bulb temperatures of the operating and storage environments

The points A to I and area T are defined in table Q.1.

© ISO/IEC 1999 – All rights reserved

Copyright International Organization for Standardization
Provided by IHS under license with ISO
No reproduction or networking permitted without license from IHS
Not for Resale

Table Q.1 - Position of the main points of Figure Q.2

	Air temperature °C	**Relative humidity %**	**Wet bulb temperature °C**
A	31,7	90,0	30,3
B	32,8	85,0	30,6
C	55,0	28,8	35,5
D	55,0	3,0	22,2
E	31,7	3,0	12,1
F	5,0	14,7	-1,4
G	-10,0	90,0	-10,3
H	5,0	85,0	3,9
I	10,0	46,8	-11,6
Test environment (T)	23,0° C ± 2,0° C	50,0% ± 5,0%	---
Storage environment	is determined by A-B-C-D-E-F-G		
Operating environment	is determined by B-C-D-E-F-H		

--`,,```,,,,````-`-`,,`,,`,`,,`---

© ISO/IEC 1999 – All rights reserved
Copyright International Organization for Standardization
Provided by IHS under license with ISO
No reproduction or networking permitted without license from IHS
Not for Resale

Annex R
(informative)

Transportation

R.1 General

As transportation occurs under a wide range of temperature and humidity variations, for differing periods, by many methods of transport and in all parts of the world it is not possible to specify conditions for transportation or for packaging.

R.2 Packaging

The form of packaging should be agreed between sender and recipient or, in the absence of such agreement, is the responsibility of the sender. It should take account of the following hazards.

R.2.1 Temperature and humidity

Insulation and wrapping should be designed to maintain the conditions for storage over the estimated period of transportation.

R.2.2 Impact loads and vibration

Avoid mechanical loads that would distort the shape of the cartridge.

Avoid dropping the cartridge.

Cartridges should be packed in a rigid box containing adequate shock absorbent material.

The final box should have a clean interior and a construction that provide sealing to prevent the ingress of dirt and moisture.

© ISO/IEC 1999 – All rights reserved

Copyright International Organization for Standardization
Provided by IHS under license with ISO
No reproduction or networking permitted without license from IHS
Not for Resale

Annex S
(informative)

Sector retirement guidelines

It is assumed that up to 10 000 sectors may be replaced in any of the following cases:

- A sector does not have at least one reliable ID field.
- Only one of the two ID fields in one sector is reliable, and the current sector number is contradictory to the one anticipated by the preceding sectors.
- A single defect of more than 40 bytes in a 2 048-byte sector is detected.
- The total number of defective bytes exceeds 60 bytes in a 2 048-byte sector or 5 bytes in one ECC interleave of a 2 048-byte sector.

© ISO/IEC 1999 – All rights reserved
Copyright International Organization for Standardization
Provided by IHS under license with ISO
No reproduction or networking permitted without license from IHS
Not for Resale

Annex T
(informative)

Track deviation measurement

The deviation of a track from its nominal location is measured in the same way as a drive sees a track, i.e. through a tracking servo. The strength of the Reference Servo used for the test is in general less that the strength of the same servo in a normal drive. The difference in strength is intended for margins in the drive. The deviation of the track is related to the tracking error between the track and the focus of the optical beam, remaining after the Reference Servo. The tracking error directly influences the performance of the drive, and is the best criterion for testing track deviations.

The specification of the axial and radial deviations can be described in the same terms. Therefore, this annex applies to both axial and radial track deviations.

T.1 Relation between requirements

The acceleration required by the motor of the tracking servo to make the focus of the optical beam follow the tracks on the disk (see 11.4.6 and 11.4.8) is a measure for the allowed deviations of the tracks. An additional measure is the allowed tracking error between the focus and the track (see 20.2.4). The relation between both is given in figure T.1 where the maximum allowed amplitude of a sinusoidal track deviation is given as a function of the frequency of the deviation. It is assumed in the figure that there is only one sinusoidal deviation present at a time.

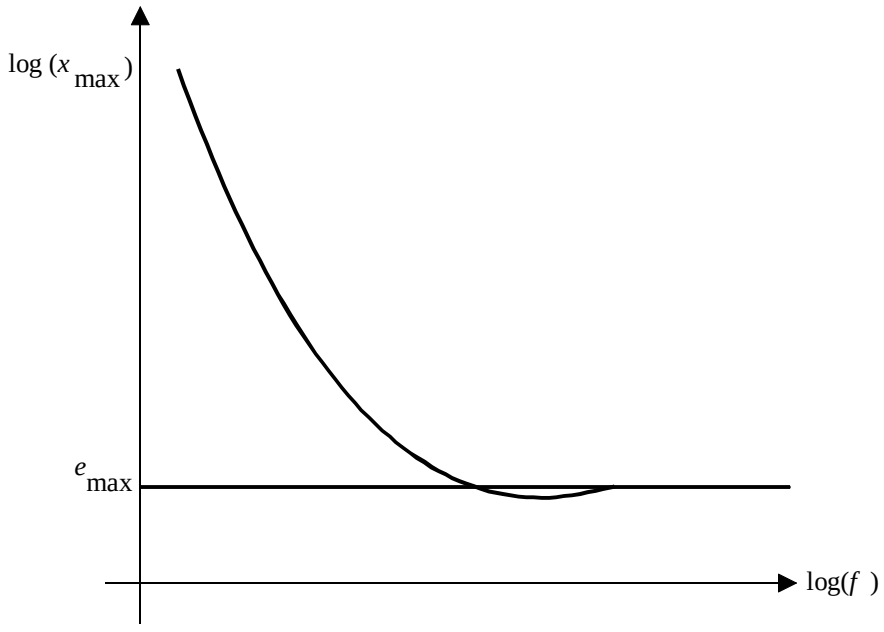

Figure T.1 Maximum allowed amplitude of a single sinusoidal track deviation

At low frequencies the maximum allowed amplitude x_{max} is given by

$$x_{max} = x_{max} / (2\pi f)^2, \quad (1)$$

where x_{max} is the maximum acceleration of the servo motor.

At high frequencies the maximum allowed amplitude x_{max} is given by

$$x_{max} = e_{max} \quad (2)$$

where e_{max} is the maximum allowed tracking error. The connection between both frequency regions is given in V.3.

© ISO/IEC 1999 – All rights reserved

Copyright International Organization for Standardization
Provided by IHS under license with ISO
No reproduction or networking permitted without license from IHS
Not for Resale

T.2 Reference Servo

The above restrictions of the track deviations is equal to the restriction of the track deviations for a Reference Servo. A Reference Servo has a well-defined transfer function, and reduces a single, sinusoidal track deviation with amplitude x_{max} to a tracking error e_{max} as in figure T.1.

The open-loop transfer function of the Reference Servo shall be

$$H_s(\mathrm{i}\omega) = \frac{1}{c}\left(\frac{\omega_0}{\mathrm{i}\omega}\right)^2 \frac{1+\frac{\mathrm{i}\omega c}{\omega_0}}{1+\frac{\mathrm{i}\omega}{c\omega_0}} \qquad (3)$$

where $\mathrm{i} = \sqrt{-1}$, $\omega = 2\pi f$ and $\omega_0 = 2\pi f_0$, with f_0 the 0 dB frequency of the open-loop transfer function. The constant c gives the cross-over frequencies of the lead-lag network of the servo: the lead break frequency $f_1 = \frac{f_0}{c}$ and the lag break frequency $f_2 = f_0 \times c$. The reduction of a track deviation x to a tracking error e by the Reference Servo is given by

$$\frac{e}{x} = \frac{1}{1+H_s} \qquad (4)$$

If the 0 dB frequency is specified as

$$\omega_0 = \sqrt{\frac{a_{max}\, c}{e_{max}}} \qquad (5)$$

then a low-frequency track deviation with an acceleration a_{max} will be reduced to a tracking error e_{max}, and a high frequency track deviation will not be reduced. The curve in figure T.1 is given by

$$x_{max} = e_{max}\,|1+H_s| \qquad (6)$$

The maximum acceleration required from the motor of this Reference Servo is

$$a_{max}(motor) = e_{max}\,\omega^2\,|1+H_s|. \qquad (7)$$

At low frequencies $f < f_0 / c$ applies

$$a_{max}(motor) = a_{max}(track) = \frac{\omega_0{}^2\, e_{max}}{c} \qquad (8)$$

Hence, it is permitted to use $a_{max}(\mathrm{motor})$ as specified for low frequencies in 11.4.6 and 11.4.8 for the calculation of ω_0 of a Reference Servo.

T.3 Requirement for track deviations

The track deviations shall be such that, when tracking with a Reference Servo on a disk rotating at the specified frequency, the tracking error shall not be larger than e_{max} during more than 7,2 µs.

The open-loop transfer function of the Reference Servo for axial and radial tracking shall be given by equation (3) within an accuracy such that $|1+H|$ does not differ by more than ± 20% from its nominal value in a bandwidth from 50 Hz to 170 kHz. The constant c shall be 3. The 0 dB frequency $\frac{\omega_0}{2\pi}$ shall be given by equation (5), where a_{max} and e_{max} for axial and radial tracking are specified in 20.2.4. 11.4.6 and 11.4.8.

--`,,```,,,,````-`-`,,`,,`,`,,`---
© ISO/IEC 1999 – All rights reserved
Copyright International Organization for Standardization
Provided by IHS under license with ISO
No reproduction or networking permitted without license from IHS
Not for Resale

T.4 Measurement implementation

Three possible implementations for an axial or radial measurement system have been given below. H_a is the open-loop transfer function of the actual tracking servo of the drive. H_S is the transfer function for the Reference Servo as given in equation (3). x and y are the position of the track and the focus of the optical beam. e_S is the tracking error after a Reference Servo, the signal of which has to be checked according to the previous paragraph.

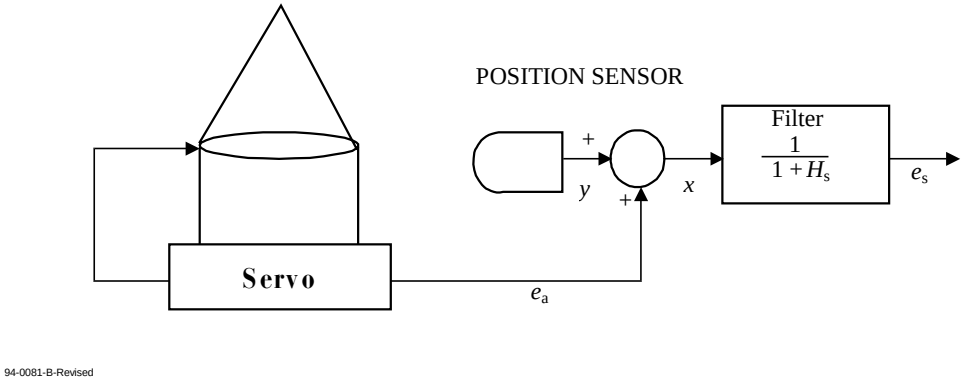

Figure T.2 - Implementation of a Reference Servo by filtering the track position signal with the reduction characteristics of the Reference Servo

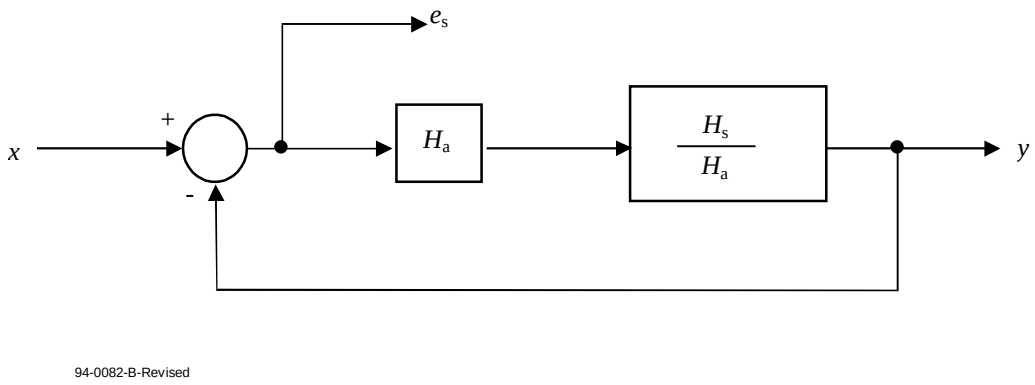

Figure T.3 - Implementation of a Reference Servo by changing the transfer function of the actual servo

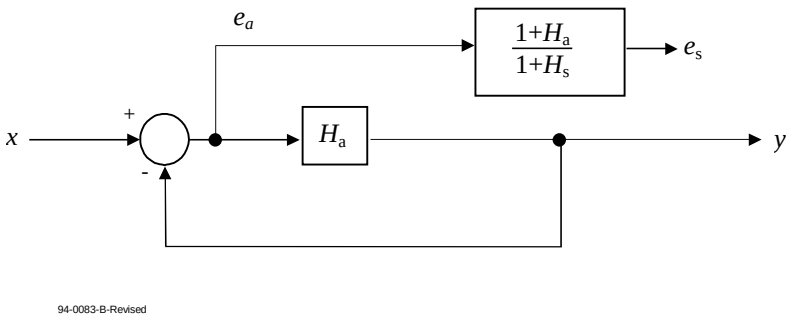

Figure T.4 - Implementation of a Reference Servo by changing the tracking error of the actual servo

© ISO/IEC 1999 – All rights reserved

Copyright International Organization for Standardization
Provided by IHS under license with ISO
No reproduction or networking permitted without license from IHS
Not for Resale

The optimum implementation depends on the characteristics H_a and H_S. Good results for motors in leaf springs are often obtained by using separate circuits in a low and high frequency Channel. The implementation of figure T.2 is used in the low-frequency Channel, while that of figures T.3 or T.4 is used in the high-frequency Channel. The signals from both channels are added with a reversed cross-over filter to get the required tracking error. In the low-frequency Channel one can also use the current through the motor as a measure of the acceleration of the motor, provided the latter is free from hysteresis. The current must be corrected for the transfer function of the motor and then be converted to a tracking error with a filter with a transfer function $\frac{e}{a} = \frac{e}{x\omega^2}$ derived from equation (4).

© ISO/IEC 1999 – All rights reserved
Copyright International Organization for Standardization
Provided by IHS under license with ISO
No reproduction or networking permitted without license from IHS
Not for Resale

Annex U
(informative)

Values to be implemented in existing and future standards

This International Standard specifies values for bytes which identify optical disk cartridges which conform to this International Standard. It is expected that other types of optical disk cartridges will be developed in future. It is therefore recommended that the following values be used for these other cartridges.

U.1 Byte 0 of the Control Track PEP Zone

Settings of bits 6 to 4 have the following meanings:

000	means Constant Angular Velocity (CAV)
001	means Constant Linear Velocity (CLV)
010	means Zoned Constant Angular Velocity (ZCAV)
011	means Zoned Constant Linear Velocity (ZCLV)
110	means Logical Zoned Constant Angular Velocity (Logical ZCAV)

U.2 Byte 7 of the Control Track PEP Zone

The following bit patterns have the indicated meanings.

0000 0000	Read-only ODCs (ROM)
0001 0000	Write once ODCs using irreversible recording
0001 0001	WO ODC using MO recording
0010 0000	Rewritable ODCs using MO recording
0101 0001	WO ODCs using exchange coupled Direct Over Write (DOW)
0110 0000	Rewritable ODCs using exchange coupled DOW
0011 0000	Rewritable ODCs of the type phase change
1001 0000	Partial ROM of Write once ODCs
1010 0000	Partial ROM of MO
1011 0000	Partial ROM of phase change
0110 0000	Direct overwrite
1110 0000	Partially Embossed Direct overwrite
0001 0011	Write Once Direct overwrite

Note that when the most significant bit is set to ONE, this indicates a partial ROM.

See also 17.3.2.1.4.

© ISO/IEC 1999 – All rights reserved

Copyright International Organization for Standardization
Provided by IHS under license with ISO
No reproduction or networking permitted without license from IHS
Not for Resale

Annex V
(informative)

Measurement of the vertical birefringence of the substrate

This annex describes a non-contact measurement method for optical disk substrate birefringence which applies to both uncoated substrates and to disks coated with thinfilms. This technique will yield average or bulk values of both in-plane birefringence (IPB) and vertical birefringence (VB) with one procedure. The method uses a slightly modified variable angle spectroscopic ellipsometer (VASE), although the variable wavelength capability is unnecessary for a simple characterization at the operating point of this Standard. The method assumes the principal optical axes of the substrate align with the polar r, ϕ, z directions of the disk, which is valid for injection molded plastic disks. Finally, the method described also assumes that the contribution of the MO ellipticity of the coated MO film(s) to the measured optical retardation is negligible compared to the contribution of the substrate material.

An ellipsometric measurement of the phase retardation between orthogonal polarization states for a range of incident angles is made to uniquely determine the substrate refractive indices for the three principal directions (N_r, N_f, N_z) This range of incident angles should be restricted only to limitations of the apparatus on the low angle side, and beam walk off on the high angle side. Angles ranging from -70° to +70° are recommended. Three angles would generally be the minimum necessary to establish VB.

When measuring a film-coated disk, the incident beam will reflect off both the top surface of the disk and the MO layers (see figure V.1). Since the substrate is relatively thin (-1,2 mm), both of these reflections can enter the detector. To eliminate the undesirable top surface reflected beam, a simple beam stop is employed. This small blocking element consists of a thin (<0,5 mm) but stiff opaque strip which is inserted at the reflection point of the incident beam and which is in close proximity with the top of the disk. Adjust the position of the strip to achieve maximum reflected signal at the point of reflection. In this situation, the top surface reflection is blocked and only the bottom reflection off the internal surface (thin film surface) is allowed to pass to the polarization detector (see figure V.1). (CAUTION: If the strip is moved too close to the incident source, the main beam is blocked and the signal drops. If the strip is moved too far from the reflection point, both reflections are blocked and again the signal drops).

For clear substrates, the VASE can be used in the straight-through mode and the measurements made in transmission and again no contact is required.

For a disk where the principal optical axes are aligned with the cylindrical coordinates of the disk (which is almost universally the case), the following equation expresses the retardation as a function of angle of incidence to the indices of the disk: N_r, N_ϕ, N_z. The retardation data are regression fit to the non-linear analytical expression given below, and the indices are determined as free parameters.

$$\Delta = d \times \left(\sqrt{N_r^2 - \sin^2(\theta)} - \frac{N_\phi}{Nz} \sqrt{N_z^2 - \sin^2(\theta)} \right)$$

where Δ is the retardation and d is the thickness of the disk. The birefringence results from the differences between the indices

In plane: $\Delta N_{in} = N_r - N_\phi$

Vertical: $\Delta N_{vert} = 0.5\ (N_r + N_\phi) - N_z$

The dimensionless birefringence can be expressed in length units by multiplying ΔN_{in} or ΔN_{vert} by the substrate thickness d. In this case, the birefringence is expressed as nm of retardation.

© ISO/IEC 1999 – All rights reserved
Copyright International Organization for Standardization
Provided by IHS under license with ISO
No reproduction or networking permitted without license from IHS
Not for Resale

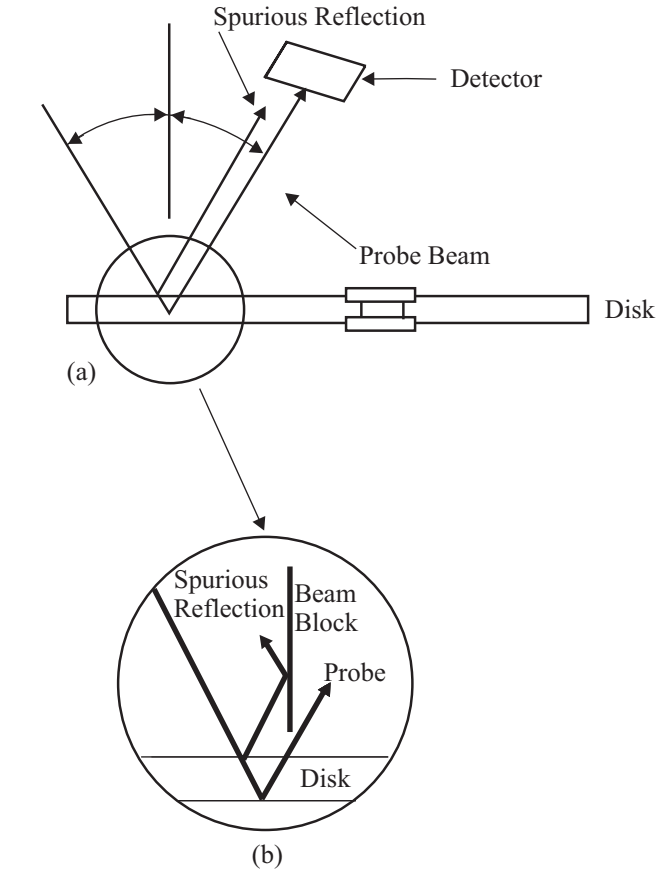

Figure V.1 (a) Origin of spurious reflection. (b) Non-contact beam blocking technique for eliminating spurious reflection.

© ISO/IEC 1999 – All rights reserved
Copyright International Organization for Standardization
Provided by IHS under license with ISO
No reproduction or networking permitted without license from IHS
Not for Resale

Annex W
(informative)

Guidelines for the use of WORM ODCs

This annex lists some important points to be observed when using the WORM ODCs specified by this Standard.

a) Read the PEP and/or the SFP when the ODC is inserted into the drive to ascertain the media type, so as to enable and/or disable the appropriate host commands. If the drive is not intended to support this type of ODC, reject the disk with an appropriate error message and disallow any further operations on the disk.

b) Before writing a sector, it must be determined whether or not the sector has been already written. This can be done in two ways. One method is to check the contents of the flag field between the Sector Header and the Data Record, and if recorded, the sector has been written and no attempt should be made to write the sector again.

The second method is to read the data record and inspect the contents. If the sector has been written and no attempt should be made to write the sector again. These tests do not apply to the sectors that make up the DMAs.

--`,,```,,,,````-`-`,,`,,`,`,,`---

© ISO/IEC 1999 – All rights reserved
Copyright International Organization for Standardization
Provided by IHS under license with ISO
No reproduction or networking permitted without license from IHS
Not for Resale

Annex X
(informative)

Laser power calibration for evaluation of media power sensitivity

X.1 Variance of testing condition

For measurement of media power sensitivity specified in clause 25.3.4, laser power of the media tester should be calibrated carefully since the values of the media power sensitivity C are easily affected by the various variation allowed for Reference drive. The laser spot profile on the magnetic layer varies with optical variation allowed for Reference drive specified in clause 9.2. Table X.1 shows the best and the worst conditions allowed for Reference drive from the point of view of the write power sensitivity. The peak temperature for the worst condition is estimated to decrease by 21% from that for the best condition. Therefore media power sensitivity C should be carefully evaluated.

Table X.1 The best and worst conditions allowed for Reference drive.

	Best condition	**Worst condition**
λ	675 nm	695 nm
λ/NA	1,227 µm	1,263 µm
D/W	0,8	0,9
Variance of wave front at the optical head	0	$\lambda^2/330$
Disk tilt	0	2,8 mrad
Variation of Substrate thickness	0	50 µm

X.2 Power calibration

Laser power calibration of the tester should be done in the following scheme. Use of a high speed front power monitor is recommended for precise calibration.

Step 1 :

Calibrate high-speed front monitor by power meter (figure Z.1).

– The calibration can be done in a d.c. laser operation with a d.c. power meter.

– For the purpose of observing the write pulse shape during writing, high speed (>100MHz) front power monitor is recommended.

© ISO/IEC 1999 – All rights reserved

Copyright International Organization for Standardization
Provided by IHS under license with ISO
No reproduction or networking permitted without license from IHS
Not for Resale

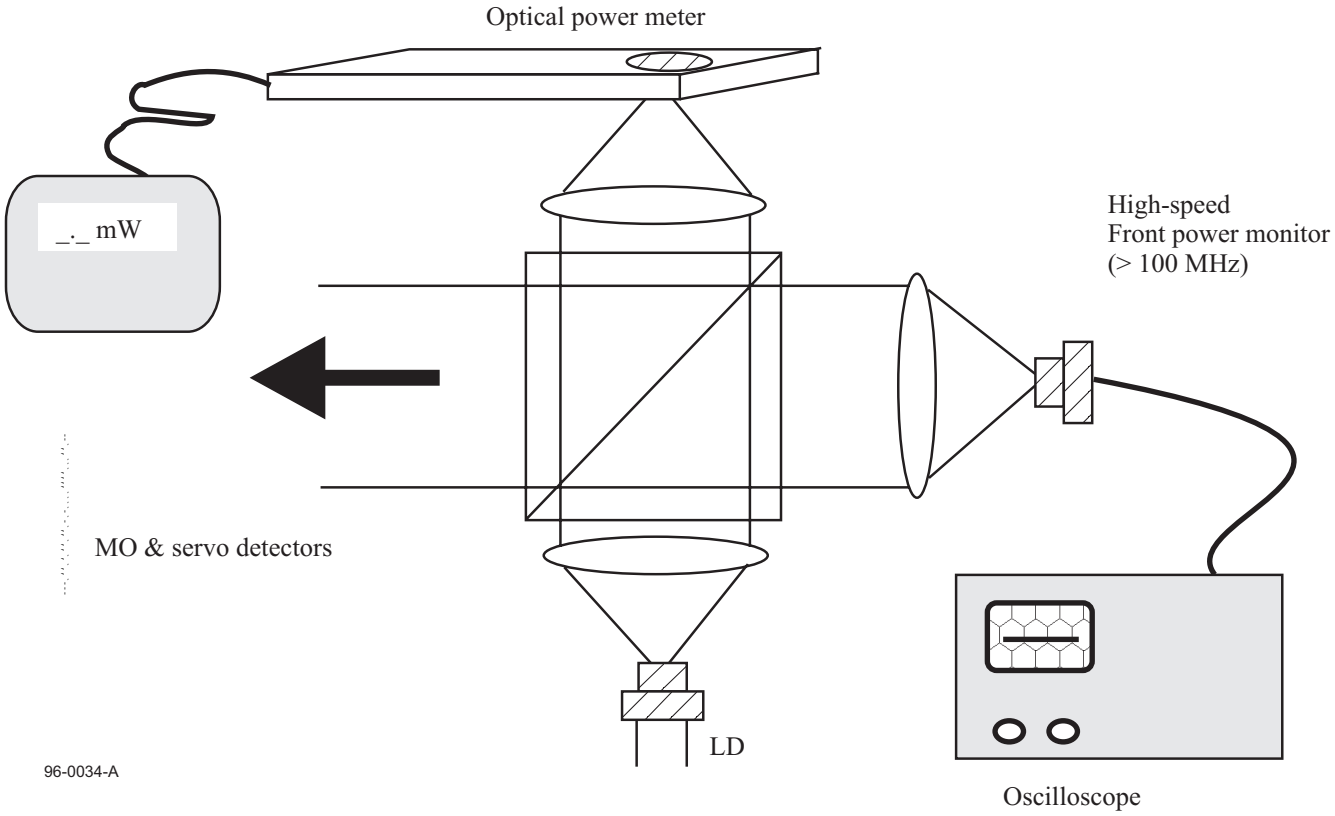

Figure X.1 - Calibration of front power monitor

Step 2 :

Directly observe the write pulse shape during writing (figure X.2).

– Pulse power in focused condition is different from that in un-focused condition because of the self coupled effect of the laser diode.

– Pulse power, pulse duration, and bias power level should be carefully observed in real testing condition.

– Check if shapes of three kinds of pulses, which is isolated pulses for 2T marks and two 2T spaced pulses for 4T marks, are completely identical. If not, significant error will appear in the measurement of C and E_{th}.

© ISO/IEC 1999 – All rights reserved
Copyright International Organization for Standardization
Provided by IHS under license with ISO
No reproduction or networking permitted without license from IHS
Not for Resale

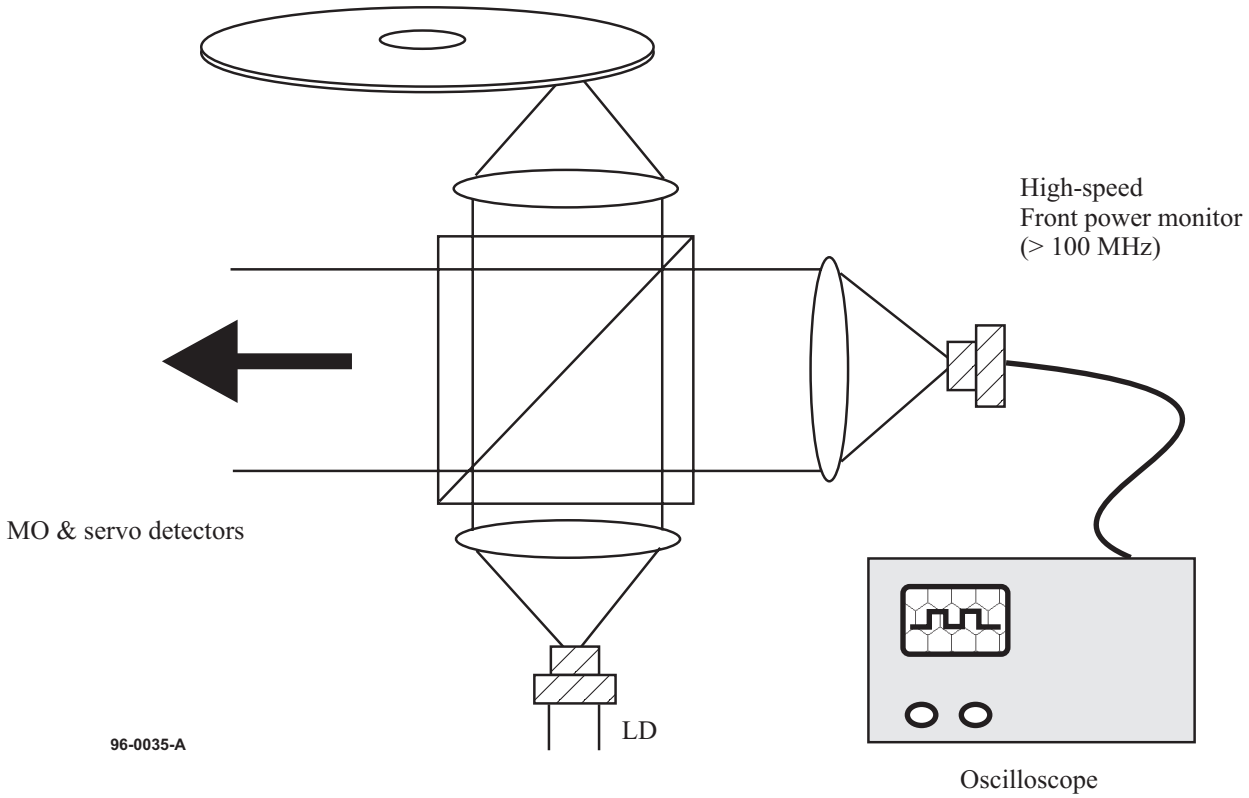

Figure X.2 - Measurement of pulse power and pulse width

Step 3 :

Measure write pulse power and pulse width with appropriate filters.

– Ringing can be removed by a (Gaussian) low pass filter with a cut-off frequency of 80 MHz (figure X.3a)

– For precise pulse energy measurement, average power level measurement is recommended unless high speed front monitor is available (figure X.3b).

Notes for measurement:

Bias power level

Bias power level P_b should be measured carefully (with an accuracy of ± 0,05 mW) because error in the P_b measurement may result in a significant error in measured C-value.

Disk temperature

Disk temperature should be kept at 25°C±1°C. Internal temperature may rise if the tester lid is closed.

Stray light

The stray light within the optical head may enter the objective lens and form a stray beam spot. Even if the temperature increase in the optical beam spot is small, the measurement for the light power through the objective lens may large.

Contamination of optical components (especially the objective lens)

If the light is absorbed by dust or other debris, the light power through the objective lens decreases. This can be measured by the power meter and does not, therefore, result in any complications. If the light is diverted instead of being absorbed, however, not all of the light power through the objective lens is valid for the temperature-up of the media; therefore, variance results. Frequent cleaning is required.

© ISO/IEC 1999 – All rights reserved

Copyright International Organization for Standardization
Provided by IHS under license with ISO
No reproduction or networking permitted without license from IHS
Not for Resale

Beam spot size

Before the measurement of media power sensitivity, the beam profile of the tester should be checked by optical knife edge profiler. Unless the measured spot diameter is far from 1,08 µm, which is the best diameter for Reference drive, the above conditions such as disk tilt should be carefully adjusted.

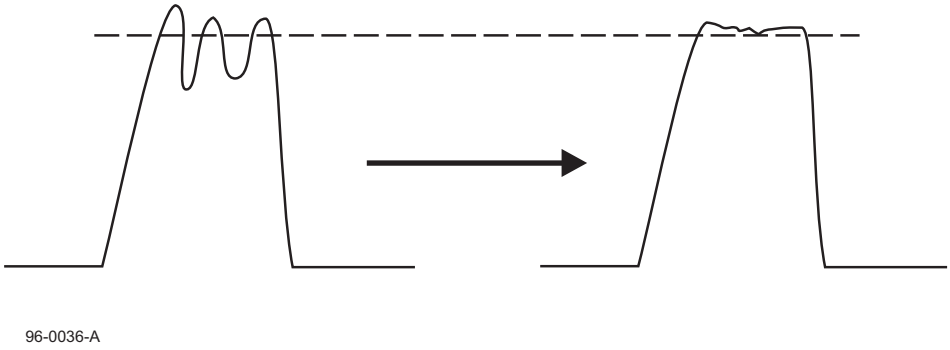

96-0036-A

Figure X.3a – Elimination of ringing by LPF (~ 100 MHz)

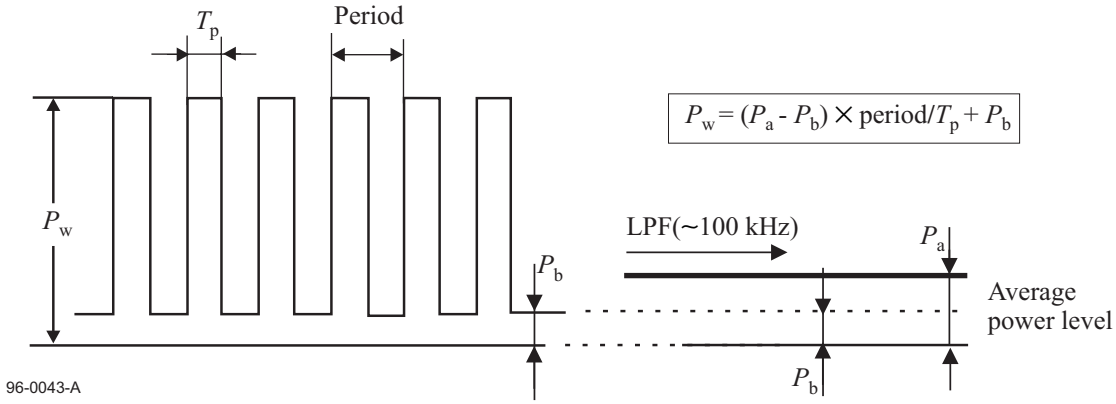

Figure X.3b - Determination of pulse power from average power level

Figure X.3 - Precise determination of pulse power from average power level

© ISO/IEC 1999 – All rights reserved
Copyright International Organization for Standardization
Provided by IHS under license with ISO
No reproduction or networking permitted without license from IHS
Not for Resale

ICS 35.220.30

Price based on 112 pages

© ISO/IEC 1999 – All rights reserved

Copyright International Organization for Standardization
Provided by IHS under license with ISO
No reproduction or networking permitted without license from IHS

Not for Resale